Form No. 3322-813

TORO®

824

Snowthrower

Model No. 38078—200000001 and Up

Operator’s Manual

Pour obtenir gratuitement une version en français de ce manuel, écrivez à l’adresse ci-dessous. N’oubliez pas d’indiquer les numéros de modèle et de série de votre produit.

The Toro Company, Attn: Parts Dept., 8111 Lyndale Ave S, Bloomington, MN 55420–1196

Contents

	Page
Introduction	2
Safety	3
General Snowthrower Safety	3
Toro Snowthrower Safety	4
Safety Decals and Instructions	6
Assembly	6
Loose Parts	6
Installing the Handle	7
Installing the Speed Selector Rod	8
Installing the Traction Rod	8
Installing the Auger/Impeller Drive Control Linkage	9
Installing the Chute Control Rod	9
Securing the Chute Deflector	10
Checking the Tire Pressure	10
Before Starting	10
Filling the Engine with Oil	10
Filling the Fuel Tank with Gasoline	11
Operation	12
Controls	12
Starting and Stopping the Engine	13
Freewheeling or Self-propelled Drive	14
Snowthrowing Tips	15
Maintenance	16
Recommended Maintenance Schedule	16
Checking the Engine Oil Level	17
Changing the Engine Oil	17
Checking/Adding Auger Gear Box Grease	17
Adjusting the Traction Drive	18
Replacing the Traction Drive Belt	18
Adjusting the Auger/Impeller Drive Belt	19
Replacing the Auger/Impeller Drive Belt	19
Adjusting the Scraper and Skids	21
Adjusting the Speed Selector	21
Lubricating the Snowthrower	22
Replacing the Spark Plug	22
Emptying the Fuel Tank	22
Storage	23
Preparing the Fuel System	23
Preparing the Engine	23
Preparing the Snowthrower	23
Accessories	23
Warranty	Back Cover

WARNING

The engine exhaust from this product contains chemicals known to the State of California to cause cancer, birth defects, or other reproductive harm.

Introduction

Thank you for choosing a Toro product. We want you to be completely satisfied with your new purchase.

Read this manual carefully to learn how to operate and maintain your product properly. The information in this manual can help you and others avoid injury and product damage. Although Toro designs and produces safe products, you are responsible for operating the product properly and safely.

Whenever you contact your Authorized Service Dealer or the factory for help with service, genuine Toro parts, or additional information, have the model number and the serial number of your product handy. You will find the model number and serial number decal on the product as illustrated in Figure 1.

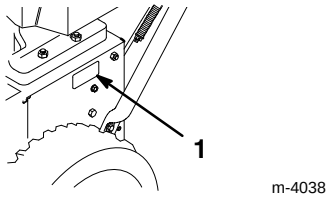

Figure 1

1. Model number and serial number decal

Write the product model number and serial number in the space below:

Model No. _____

Serial No. _____

This manual identifies potential hazards and has special safety messages that help you and others avoid personal injury and even death. DANGER, WARNING, and CAUTION are words used to identify the level of hazard.

DANGER signals an extreme hazard that will cause serious injury or death if you do not follow the recommended precautions.

©**The Toro Company – 1999**

All Rights Reserved

Printed in the USA

WARNING signals a hazard that may cause serious injury or death if you do not follow the recommended precautions.

CAUTION signals a hazard that may cause minor or moderate injury if you do not follow the recommended precautions.

This manual uses two other words to highlight information. **Important** calls attention to special mechanical information and **Note** emphasizes general information worthy of special attention.

Safety

To ensure maximum safety, best performance, and to gain knowledge of the product, it is essential that you and any other operator of the snowthrower read and understand the contents of this manual before the motor is ever started. Pay particular attention to the safety alert symbol ⚠ which means CAUTION, WARNING, OR DANGER — "personal safety instruction." Read and understand the instruction because it has to do with safety. Failure to comply with instruction may result in personal injury.

The snowthrower is designed and tested to offer reasonably safe service; however, **failure to comply with the following instructions may result in personal injury.**

General Snowthrower Safety

The following instructions have been adapted from the ANSI/OPEI standard B71.3—1995 and ISO standard 8437:1989. Information or terminology specific to Toro snowthrowers is enclosed in parenthesis.

Training

- Read the operator's manual carefully. Be thoroughly familiar with the controls and the proper use of the equipment. Know how to stop the unit and disengage the controls quickly.
- Never allow children to operate the equipment. Never allow adults to operate the equipment without proper instruction.
- Keep the area of operation clear of all persons, particularly small children and pets.
- Exercise caution to avoid slipping or falling, especially when operating in reverse.

Preparation

- Thoroughly inspect the area where the equipment is to be used and remove all doormats, sleds, boards, wires, and other foreign objects.
- Disengage all clutches and shift into neutral before starting the engine.
- Do not operate the equipment without wearing adequate winter garments. Wear footwear which will improve footing on slippery surfaces.
- Handle fuel with care; it is highly flammable.
  - Use an approved fuel container.
  - Never add fuel to a running or hot engine.
  - Fill fuel tank outdoors with extreme care. Never fill fuel tank indoors.
  - Replace gasoline caps securely and wipe up spilled fuel.
- Use only the power cord supplied with the snowthrower and a receptacle appropriate for use with the cord for electric starting motors.
- Adjust the collector (auger) housing height to clear gravel or crushed rock surface. (This is not necessary on single-stage snowthrowers).
- Never attempt to make any adjustments while the engine is running, except where specifically recommended by manufacturer (Toro).
- Let engine and machine adjust to outdoor temperatures before starting to clear snow.
- The operation of any powered machine can result in foreign objects being thrown into the eyes. Always wear safety glasses or eye shields during operation or while performing an adjustment or repair.

Operation

- Do not put hands or feet near or under rotating parts. Keep clear of the discharge opening at all times.
- Exercise extreme caution when operating on or crossing gravel drives, walks, or roads. Stay alert for hidden hazards or traffic.
- After striking a foreign object, stop the engine, remove the wire from the spark plug, thoroughly inspect the snowthrower for any damage, and repair the damage before restarting and operating the snowthrower.
- If the unit should start to vibrate abnormally, stop the engine and check immediately for the cause. Vibration is generally a warning of trouble.
- Stop the engine whenever you leave the operating position, before unclogging the collector (auger)/impeller housing or discharge guide (chute), and when making any repairs, adjustments, or inspections.
- When cleaning, repairing, or inspecting, make certain the collector/impeller (auger/impeller or rotor blades) and all moving parts have stopped. Disconnect the

spark-plug wire, and keep the wire away from the plug to prevent accidental starting. Disconnect the cable on electric motors.

- Do not run the engine indoors, except when starting it and for moving the snowthrower in or out of the building. Open the outside doors; exhaust fumes are dangerous.
- Do not clear snow across the face of slopes. Exercise extreme caution when changing direction on slopes. Do not attempt to clear steep slopes.
- Never operate the snowthrower without proper guards. plates or other safety protective devices in place.
- Never operate the snowthrower near glass enclosures, automobiles, window wells, drop-offs, etc. without proper adjustment of the snow discharge angle. Keep children and pets away.
- Do not overload the machine capacity by attempting to clear snow at too fast a rate.
- Never operate the machine at high transport speeds on slippery surfaces. Look behind and use care when moving in reverse.
- Never direct discharge at bystanders or allow anyone in front of the unit.
- Disengage power to the collector/impeller (auger/impeller or rotor blades) when snowthrower is transported or not in use.
- Use only attachments and accessories approved by the manufacturer of snowthrower (Toro), such as wheel weights, counterweights, cabs, etc. (Refer to your Authorized Service Dealer for accessories available for your snowthrower.)
- Never operate the snowthrower without good visibility or light. Always be sure of your footing, and keep a firm hold on the handles. Walk; never run.

Maintenance and storage

- Check all fasteners at frequent intervals for proper tightness to be sure the equipment is in safe working condition.
- Never store the machine with fuel in the fuel tank inside a building where ignition sources are present such as hot water and space heaters, clothes dryers, etc. Allow the engine to cool before storing in any enclosure.
- Always refer to this operator's manual for important details if the snowthrower is to be stored for an extended period.
- Maintain or replace safety and instruction labels, as necessary.
- Run the machine a few minutes after throwing snow to prevent freeze-up of the collector (auger)/impeller. (With the engine running, pull the recoil starter handle several times.)

Toro Snowthrower Safety

The following list contains safety information specific to Toro products or other safety information that you must know that is not included in the ANSI or ISO standards.

- **The rotating impeller/auger or rotor blades can cut off or injure fingers or hands.** Stay behind the handles and away from the discharge opening while operating the snowthrower. **Keep your face hands, feet, and any other part of your body or clothing away from concealed, moving, or rotating parts.**
- Before adjusting, cleaning, repairing, and inspecting the snowthrower, and before unclogging the discharge chute, **stop the engine, remove the key, and wait for all moving parts to stop**. Also, pull the wire off of the spark plug and keep it away from the plug to prevent someone from accidentally starting the engine.
- Use a stick, **not your hands** to remove obstructions from the discharge chute.
- **Before** leaving the operator's position behind the handles, stop the engine, remove the key, and wait for all moving parts to stop.
- Do not wear loose fitting clothing that could possibly get caught in moving parts.
- If a shield, safely device, or decal is damaged, illegible, or lost, repair or replace it before beginning operation. Also, tighten any loose fasteners.
- **Do not** smoke while handling gasoline.
- For two-stage snowthrowers, use the lower gear and, if applicable, shift into the rear wheel position when operating on slopes.
- **Do not** use the snowthrower on a roof.
- Do not touch the engine while it is running or soon after it is stopped because the engine will be hot enough to cause a burn. Do not add oil or check the oil level in the crankcase when the engine is running.
- Perform only those maintenance instructions described in this manual. Before performing any maintenance, service, or adjustment, stop the engine, remove the key and pull the wire from the spark plug, keeping it away from the plug to prevent someone from accidentally starting the engine. If major repairs are ever needed, contact your Authorized Toro Service Dealer.
- Do not over speed the engine by changing the governor settings.

- When storing the snowthrower for more than 30 days, drain the gasoline from the fuel tank to prevent a potential hazard. Store gasoline in a safety approved, red metal container. Remove the key from the ignition switch before storing the snowthrower.
- To ensure the best performance and safety, purchase only genuine Toro replacement parts and accessories to keep the Toro all Toro. **Do not use "Will Fit" replacement parts and accessories as they could cause a safety hazard.**

Before Operating

Read and understand the contents of this manual before operating the snowthrower. Become familiar with all controls and know how to stop the engine quickly.

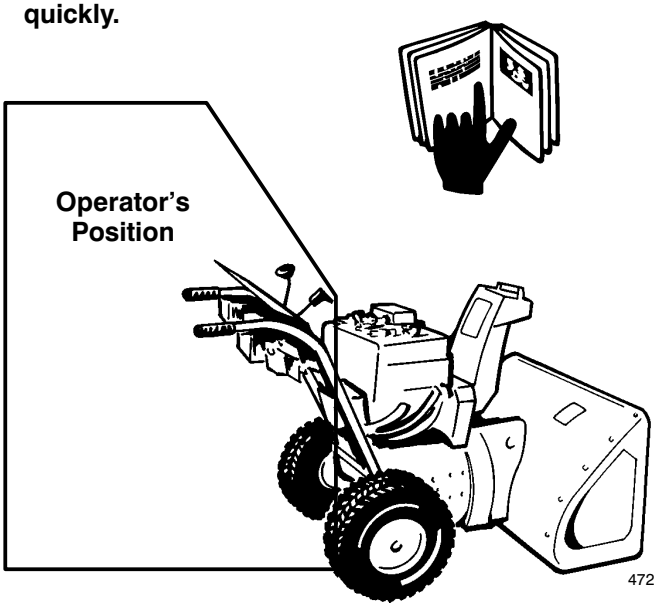

Caution: Improper use may result in loss of fingers, hands, or feet.

There is a high-speed impeller within two inches of the opening.

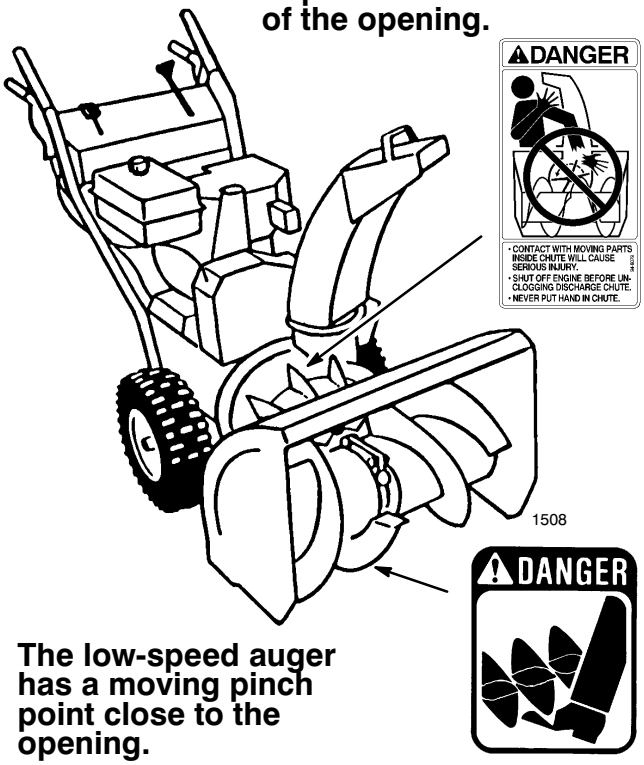

The low-speed auger has a moving pinch point close to the opening.

Safety Decals and Instructions

Safety decals and instructions are easily visible to the operator and are located near any area of potential danger. Replace any decal that is damaged or lost. Decals with Tecumseh part numbers must be obtained from Tecumseh Products Company. Decals with Toro part numbers must be obtained from The Toro Company.

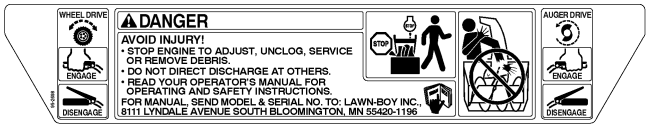

On Control Panel
(Toro Part No. 95-2698)



Next to Primer
(Tecumseh Part No. 36501)

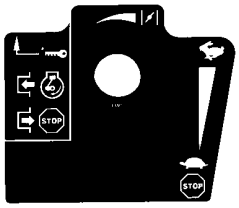

On Engine
(Tecumseh Part No. 35077)



On Auger Housing
(Toro Part No. 53-7670)



On Chute Control Bracket
(Toro Part No. 63-3510)



On Engine
(Tecumseh Part No. 37119)



On Discharge Chute
(Toro Part No. 94-8079)

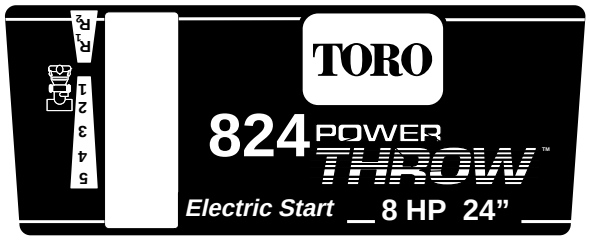

On Control Panel
(Toro Part No. 100-3341)

Assembly

Note: Determine the left and right sides of the snowthrower by standing in the normal operating position.

Loose Parts

Part	Qty	Use
Handles	2	Installing the handle
Capscrews and curved washers	4	
Cotter pin	1	Installing the speed selector rod
S[eed selector rod	1	
Flat washer	1	

Part	Qty	Use
Lower link	1	Installing the auger and traction drive control rod
Hex flange nut	1	
Flange locknuts	2	
Compression spring	1	
Worm gear	1	Installing the chute control rod
Bracket	1	
Carriage screw	1	
Flat washer	1	
Locknut	1	
Key	1	Starting and stopping the engine

Specifications and design are subject to change without notice.

Installing the Handle

1. Remove the tie straps that secure the control rods to the handle.

2. Remove the axle pins from both wheels (Fig. 2) and slide the wheels outward on the axle approximately one inch (2.5 cm).

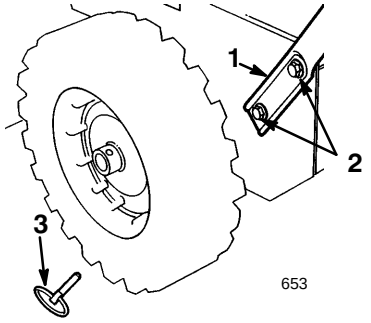

Figure 2

1. Handle
2. Capscrews and curved washers
3. Axle pin

3. Hold the handles in the installation position and insert the traction rod through the loop in the lower traction rod (Fig. 7).

IMPORTANT: Ensure that the chute control rod assembly is between the engine and the traction rod (Fig. 3).

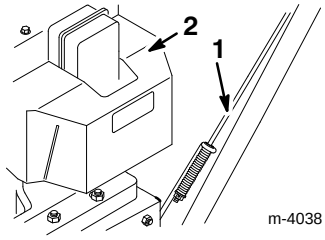

Figure 3

1. Traction rod
2. Engine

4. Position the left handle against the left side of the snowthrower, align the handle mount holes with the holes in the side plate, and secure the handle with two capscrews and curved washers until finger tight (Fig. 2).

Note: The concave side of the curved washer goes against the outside of the handle.

5. Position the right handle against the right side of the snowthrower, align the handle mount holes with the holes in the side plate, and secure the handle with two capscrews and curved washers until finger tight.

6. Slide the wheels inward and install the axle pin through the holes in the wheel hub and through the **inner** hole of the axle (Fig. 4).

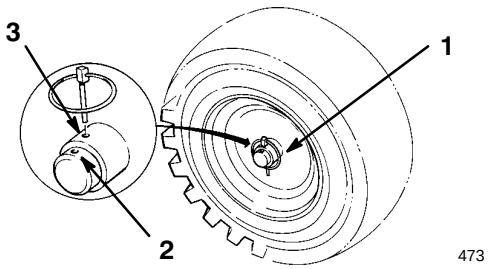

Figure 4

1. Axle pin
2. Outer axle hole
3. Inner axle hole and wheel hub

Note: If the snowthrower comes with the optional tire chains, install the axle pin through the **outer** axle holes.

7. Ensure that the handles are in line with each other and then tighten the capscrews that secure both handles.

Installing the Speed Selector Rod

1. Pull the speed selector arm (Fig. 5) to the fully "out" position.

2. Move the speed selector (Fig. 15) on the control panel to the R_2 (reverse) position.

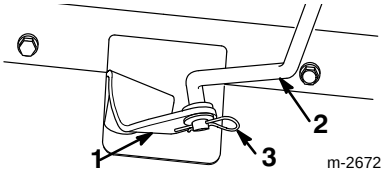

Figure 5

1. Speed selector arm
2. Speed selector rod
3. Flat washer and cotter pin

3. Rotate the speed selector rod in the trunnion (Fig. 6) until the bottom end of the rod slips into the hole in the speed selector arm (Fig. 5).

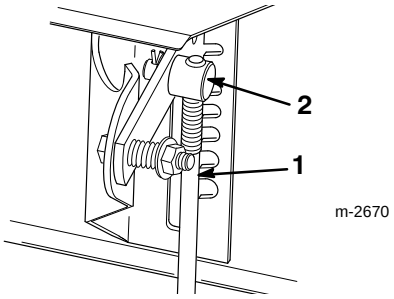

Figure 6

1. Speed selector rod
2. Trunnion

4. Install the speed selector rod into the selector arm, add one flat washer on the rod, and secure it with a cotter pin (Fig. 5).

Note: If the speed selector will not move into third gear or does not meet your speed requirements, adjust the speed selector. Refer to *Adjusting the Speed Selector*, page 21.

Installing the Traction Rod

1. Slide the spring onto the bottom of the traction control rod (Fig. 7).

2. Thread a flange locknut (flange side up) onto the bottom of the traction control rod below the spring (Fig. 7).

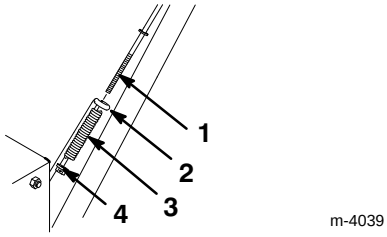

Figure 7

1. Traction rod
2. Lower traction rod
3. Spring
4. Flange locknut

3. Adjust the flange lock nut up or down on the traction control rod until the distance between the top of the handgrip and the bottom of the traction control lever is approximately five inches (12.7 cm) (Fig. 8).

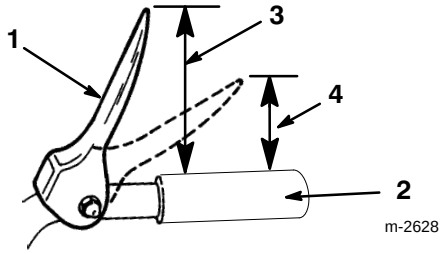

Figure 8

1. Traction control lever
2. Handgrip
3. Approximately 5 inches (12.7 cm)
4. Three to four inches (7.6 to 10.2 cm)

4. Move speed selector (Fig. 15) into third gear.

5. Slowly pull the snowthrower backward while pressing the traction control lever toward handle.

The adjustment is correct when the wheels stop rolling backwards and the distance between the top of the handgrip and the bottom of the traction control lever is three to four inches (7.6 to 10.2 cm) (Fig. 8).

6. Adjust the flange locknut, if necessary, to obtain this dimension, then tighten the flange locknut securely.

Installing the Auger/Impeller Drive Control Linkage

1. Thread a flange nut (flange side down) onto the upper control rod located on the right handle (Fig. 9).

2. Install the lower link through the outer hole in the lower control rod (Fig. 9).

3. Insert the upper control rod through the loop in the lower link control rod (Fig. 9).

4. Thread a flange lock nut (flange side up) onto the bottom of the upper control rod below the loop in the lower link (Fig. 9).

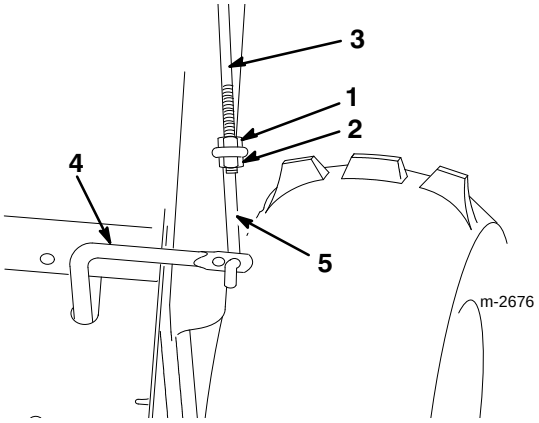

Figure 9

1. Flange nut
2. Flange lock nut
3. Upper control rod
4. Lower control rod
5. Lower link

---

5. Check the distance between the top of the handgrip and the bottom of the auger/impeller control lever. The distance should be approximately four inches (10.2 cm) (Fig. 10).

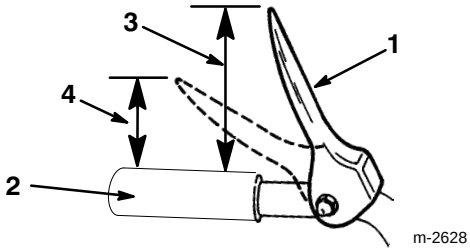

Figure 10

1. Auger/impeller control lever
2. Handgrip
3. Approximately four inches (10.2 cm)
4. Two inches (5 cm)

---

6. Press the auger/impeller control lever slowly toward the handgrip.

The amount of force to compress the lever will increase noticeably when you remove the slack from the drive belt (approximately one–half of the lever movement). The adjustment is correct when the force **begins** to increase and the distance between the top of the handgrip and the bottom of the auger/impeller control lever is two inches (5 cm) (Fig. 10).

Note: If the force does not noticeably increase, remove the belt cover (refer to *Replacing the Auger/ Impeller Drive Belt*, steps 1 and 2 on page 19) and measure the two-inch (5 cm) dimension above the handgrip at the point where there is no slack in the auger/impeller drive belt.

7. Adjust the two nuts, if necessary, to obtain this dimension, then tighten the nuts securely (Fig. 9).

Installing the Chute Control Rod

1. Assemble the chute control bracket and rod to the left side of the handle with the capscrew and locknut. Leave the locknut loose until you completely mount the assembly (Fig. 11).

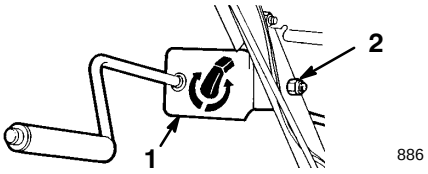

Figure 11

1. Chute control bracket and rod
2. Capscrew and locknut

2. Apply No. 2 general purpose grease to the worm gear.

3. Loosely mount the worm gear and bracket to the mounting flange with a bolt, pyramidal washer, and locknut (Fig. 12).

4. Slide the worm gear into the teeth of the chute retaining ring and tighten the locknut (Fig. 12).

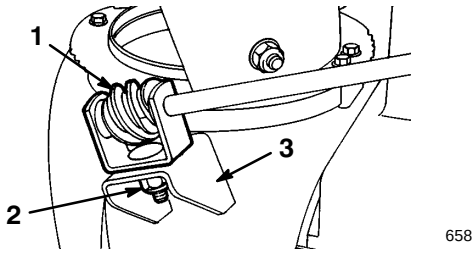

Figure 12

1. Worm gear and bracket
2. Bolt, pyramidal washer, and locknut
3. Mounting flange

5. Tighten the locknut that secures the chute control bracket (Fig. 11).

6. Check the operation of the chute control rod. If the chute control binds, apply a light coat of grease to the worm gear and move it slightly outward.

Securing the Chute Deflector

1. Pivot the deflector upward and back until the deflector stop passes over the lip on the top of the chute.

2. Secure the left side of the deflector to the discharge chute using parts as illustrated in Figure 13.

Ensure that you position the rubber washer and friction plate between the chute and deflector, and that the friction plate tabs fit into holes in deflector.

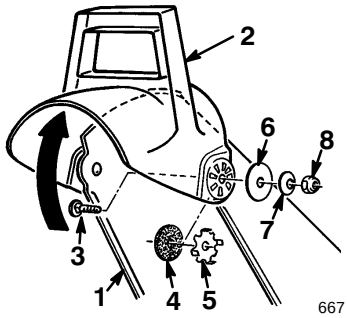

Figure 13

1. Chute
2. Deflector
3. Carriage bolt
4. Rubber washer
5. Friction plate
6. Large flat washer
7. Curved washer
8. Locknut

Note: The concave side of the curved washers go against the large flat washers.

3. Tighten the nuts on both sides of the deflector. Do not overtighten the nuts.

Checking the Tire Pressure

Check the pressure of the tires because they are over–inflated at the factory for shipping. Reduce the pressure equally in both tires to between 7 and 15 psi (48 and 103 kPa).

Before Starting

Filling the Engine with Oil

The engine comes from the factory with only a few ounces of oil in the crankcase. Before starting the engine, add oil. The crankcase holds 26 ounces (0.77 liters) of oil; however, because there is some oil in the crankcase, do not add the full amount at one time. Gradually add the oil according to the following procedure:

1. Clean the area around the dipstick (Fig. 14).

2. Remove the dipstick from the crankcase (Fig. 14).

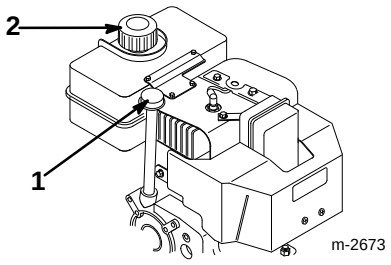

Figure 14

1. Dipstick
2. Fuel tank cap

3. Slowly pour 3/4 of the total capacity of oil into the crankcase.

Use only a high–quality, SAE 5W–30 or SAE 10 weight, detergent oil, having the American Petroleum Institute (API) "service classification"—SE, SF or SG. For extreme cold conditions (below 0°F or –18°C), use 0W–30 weight detergent oil, having the American Petroleum Institute (API) "service classification"—SE, SF or SG.

4. Wipe the dipstick clean with a clean cloth.

5. Fully install the dipstick.

Note: Fully install the dipstick to ensure an accurate oil level reading.

6. Remove the dipstick.

7. Read the oil level on the dipstick.

8. If the oil level is below the Full mark, slowly add oil, checking the level frequently (steps 4 through 7), until the dipstick reads Full.

IMPORTANT: Do not overfill the crankcase or engine damage will result.

Filling the Fuel Tank with Gasoline

Use clean, fresh lead-free gasoline, including *oxygenated* or *reformulated* gasoline, with an octane rating of 87 or higher. To ensure freshness, purchase only the quantity of gasoline that you expect to use in 30 days. Using unleaded gasoline results in fewer combustion chamber deposits and longer spark plug life.

Engines certified to comply with California and U.S. EPA emission regulations for ULGE engines are certified to operate on regular unleaded gasoline, include EM and TWC (if so equipped) emission control systems, and do not include any user adjustable features.

IMPORTANT: Do not use methanol, gasoline containing methanol, gasohol containing more than 10% ethanol, premium gasoline, or white gas. Using these fuels can damage the engine's fuel system.

DANGER

POTENTIAL HAZARD

- **In certain conditions gasoline is extremely flammable and highly explosive.**

WHAT CAN HAPPEN

- **A fire or explosion from gasoline can burn you, others, and cause property damage.**

HOW TO AVOID THE HAZARD

- **Use a funnel and fill the fuel tank outdoors, in an open area, when the engine is cold. Wipe up any gasoline that spills.**
- **Do not fill the fuel tank completely full. Add gasoline to the fuel tank until the level is 1/4" to 1/2" (6 mm to 13 mm) below the bottom of the filler neck. This empty space in the tank allows gasoline to expand.**
- **Never smoke when handling gasoline, and stay away from an open flame or where gasoline fumes may be ignited by a spark.**
- **Store gasoline in an approved container and keep it out of the reach of children.**
- **Never buy more than a 30-day supply of gasoline.**

DANGER

POTENTIAL HAZARD

- **When fueling, under certain circumstances, a static charge can develop, igniting the gasoline.**

WHAT CAN HAPPEN

- **A fire or explosion from gasoline can burn you and others and cause property damage.**

HOW TO AVOID THE HAZARD

- **Always place gasoline containers on the ground away from your vehicle before filling.**
- **Do not fill gasoline containers inside a vehicle or on a truck or trailer bed because interior carpets or plastic truck bed liners may insulate the container and slow the loss of any static charge.**
- **When practical, remove gas–powered equipment from the truck or trailer and refuel the equipment with its wheels on the ground.**
- **If this is not possible, then refuel such equipment on a truck or trailer from a portable container, rather than from a gasoline dispenser nozzle.**
- **If a gasoline dispenser nozzle must be used, keep the nozzle in contact with the rim of the fuel tank or container opening at all times until fueling is complete.**

Use a fuel stabilizer/conditioner regularly during operation and storage. A stabilizer/conditioner cleans the engine during operation and prevents gum–like varnish deposits from forming in the engine during periods of storage.

IMPORTANT: Do not use fuel additives other than a fuel stabilizer/conditioner. Do not use fuel stabilizers with an alcohol base such as ethanol, methanol, or isopropanol.

1. Clean the area around the fuel tank cap (Fig. 14).
2. Remove the cap from fuel tank.
3. Using unleaded, regular gasoline, fill the tank to within 1/4 to 1/2 in. (6 to 13 mm) from the top of the tank.

IMPORTANT: Do not fill the tank with gasoline into the filler neck. This space is for expansion of fuel. Do not fill the tank completely full.

4. Install the fuel tank cap.
5. Wipe up any spilled gasoline.

Operation

Controls

- **Auger/Impeller Drive Control Lever** (Fig. 15)—To engage both the auger and impeller, press the lever against the right handgrip. To disengage, release the lever.
- **Traction Control Lever** (Fig. 15)—To engage the traction (wheel drive), press the lever against left handgrip. To stop traction, release the lever.
- **Speed Selector** (Fig. 15)—This control has five positions: two reverse and three forward gears. To change speeds, move gear the shift to the desired position. The lever locks in a notch at each speed selection.

  Note: Before shifting gears into or out of reverse, release the traction control lever. You may shift on-the-go between any of the **forward** speeds without releasing the traction control lever. The speed selector may shift with difficulty in heavy load conditions.
- **Discharge Chute Control** (Fig. 15)—Rotate the discharge chute control clockwise to move the discharge chute to the left and counterclockwise to move the chute to the right.
- **Chute Deflector Handle** (Fig. 15)—Move the deflector handle forward to move the snow stream down and rearward to move the snow stream up.

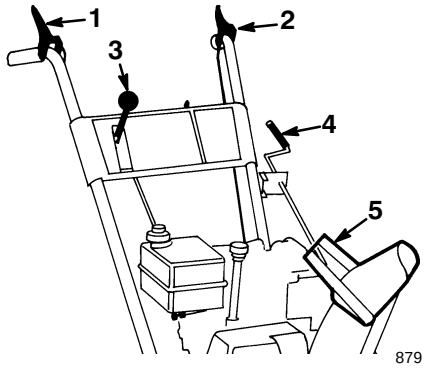

Figure 15

1. Auger/impeller control
2. Traction control
3. Speed selector
4. Discharge chute control
5. Chute deflector handle

- **Ignition Switch** (Fig. 16)—Insert the key before starting the engine. To stop the engine, remove the key.
- **Throttle** (Fig. 16)—Move the throttle upward to increase engine speed and downward to decrease engine speed.

- **Choke** (Fig. 16)—Rotate the choke to the Full choke position to start a cold engine. As engine warms up, move the choke gradually to the Off position.
- **Primer** (Fig. 16)—Press the primer to pump a small amount of gasoline into the engine for improved cold weather starting.

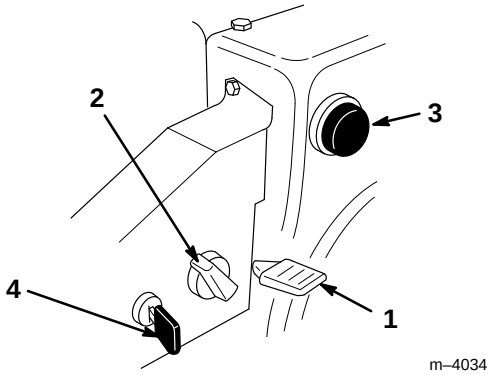

Figure 16

1. Throttle
2. Choke
3. Primer
4. Key

- **Fuel Shut-off Valve** (Fig. 17)—Close the valve by rotating it to the right to stop fuel flow from fuel tank. Open the valve by rotating it to the left. Close the valve when you do not use the snowthrower.

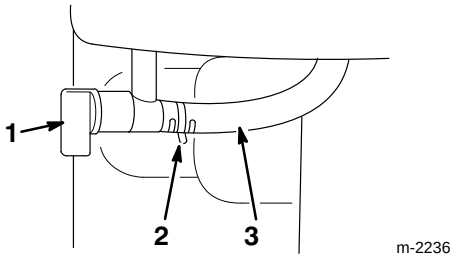

Figure 17

1. Fuel shut–off valve
2. Hose clamp
3. Fuel line

- **Recoil Starter** (Fig. 18)—Pull the recoil starter to start the engine.

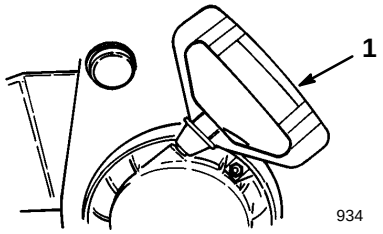

Figure 18

1. Recoil starter

Starting and Stopping the Engine

Removing the Heater Box

If you operate the engine when the air temperature is above 40°F (4°C), remove the carburetor heater box (Fig. 19).

1. Pull the wire off of the spark plug and ensure that the wire does not contact the plug (Fig. 19).

1. Pull the choke knob off of the choke rod (Fig. 16).

2. Remove the two Phillips screws, two hex head screws and lock washer that secure the heater box in place (Fig. 19).

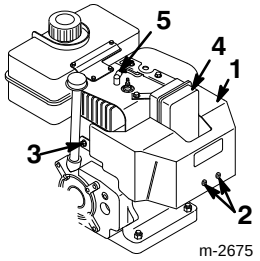

Figure 19

1. Carburetor heater box
2. Phillips screws
3. Hex head screw and lock washer
4. Hex head screw
5. Spark plug wire

3. Lift the heater box up and away from the engine.

4. Install the choke knob on the choke rod.

5. Place the spark plug wire on the spark plug (Fig. 19).

Starting the Engine

DANGER

POTENTIAL HAZARD
- **When the snowthrower is running, the impeller and auger can be rotating.**

WHAT CAN HAPPEN
- **The rotating auger/impeller can cut off or injure hands and feet.**

HOW TO AVOID THE HAZARD
- **Before adjusting, cleaning, repairing and inspecting the snowthrower, and before unclogging the discharge chute, *shut the engine off and wait for all moving parts to stop.* Also, pull the wire off of the spark plug and keep it away from the plug to prevent someone from accidentally starting the engine.**
- **Use a stick, *not your hands*, to remove an obstruction from the discharge chute.**
- **Stay behind the handles and away from the discharge opening while operating the snowthrower.**
- **Keep face, hands, feet, and any other part of your body or clothing away from concealed, moving or rotating parts.**

IMPORTANT: Check the auger, impeller, and the discharge chute contain no obstructions before you operate the snowthrower. *Use a stick, not your hand, to remove an obstruction from the discharge chute.*

1. Move the throttle (Fig. 16) to the Fast position.
2. Open the fuel shut–off valve below the fuel tank (Fig. 17) by rotating it to the left.
3. Rotate the choke (Fig. 16) to full choke position.
4. Cover the hole in center of the primer with your thumb and push the primer slowly three times, pausing for two seconds between each push. **Do not use the primer if the engine has been running and is hot.**

Note: Excessive priming may flood the engine and prevent it from starting.

5. Insert the ignition key (Fig. 16).
6. Grasp the recoil starter handle (Fig. 18) and pull it out slowly until positive engagement results; then pull it vigorously to start the engine.
7. Keep a firm grip on starter handle and return the rope slowly.

Note: If engine does not start or if temperature is –10°F (–23°C) or below, the engine may need additional priming. After each push of the primer, try to start the engine before priming again.

8. After the engine starts, immediately rotate the choke (Fig. 16) to the 3/4 position.
9. As the engine warms up, rotate the choke to the 1/2 position; then to the Off position.

   If the engine falters, return the choke to the 1/2 position until the engine warms sufficiently, then rotate the choke to the Off position.

Before Stopping the Engine

1. Release the traction and auger/impeller drive controls (Fig. 15).
2. Engage the auger/impeller to clear any remaining snow from inside the housing.
3. Run the engine for a few minutes to help dry off any accumulated moisture.
4. With the engine running, pull the recoil starter with a rapid, continuous, full arm stroke three or four times. This helps prevent possible freeze–up of the recoil starter.

Note: Pulling the starter rope produces a clattering sound. This is not harmful to the engine or the starter.

Stopping the Engine

1. Release the traction and auger/impeller control levers (Fig. 15).
2. Move the throttle to slow and remove the ignition key (Fig. 16).
3. Wait for all moving parts to stop before leaving the operator's position (behind the handles).

Freewheeling or Self-propelled Drive

You can operate the snowthrower with the self–propelling feature engaged or disengaged (freewheeling). There are two holes in each end of the axle. When you insert the axle pins through the outer axle holes and not through the wheel hubs (Fig. 4), the snowthrower freewheels. When

you insert the axle pins through the holes in the wheel hubs and the inner axle holes (Fig. 4) and engage the traction control lever, the snowthrower propels itself.

Snowthrowing Tips

DANGER

POTENTIAL HAZARD
- **When the snowthrower is running, the impeller and auger can be rotating.**

WHAT CAN HAPPEN
- **The rotating auger/impeller can cut off or injure hands and feet.**

HOW TO AVOID THE HAZARD
- **Before adjusting, cleaning, repairing and inspecting the snowthrower, and before unclogging the discharge chute, *shut the engine off and wait for all moving parts to stop.* Also, pull the wire off of the spark plug and keep it away from the plug to prevent someone from accidentally starting the engine.**
- **Use a stick, *not your hands*, to remove an obstruction from the discharge chute.**
- **Stay behind the handles and away from the discharge opening while operating the snowthrower.**
- **Keep face, hands, feet, and any other part of your body or clothing away from concealed, moving or rotating parts.**

WARNING

POTENTIAL HAZARD
- **Stones, toys and other foreign objects may be picked up and thrown by the rotor blades.**

WHAT CAN HAPPEN
- **Thrown objects can cause serious personal injury to operator or bystanders.**

HOW TO AVOID THE HAZARD
- **Keep the area to be cleared free of all objects that could be picked up and thrown by rotor blades.**
- **Keep all children and pets away from area of operation.**

- When the snowthrower is not being used, close the fuel shut-off valve and remove the key.
- Remove snow as soon as possible after it falls. This produces best snow removal results.
- Adjust the skids to match the type of surface being cleaned. Refer to *Adjusting the Skids and Scraper Blade*, page 21.
- The snowthrower is designed to clean snow down to the contact surface, but there are times when the front of the snowthrower may tend to ride up. If this happens, reduce forward speed by shifting into a lower gear. If the front still tends to ride up, lift up on both handles to hold down the front of snowthrower.
- Discharge the snow downwind whenever possible.
- Overlap each swath to ensure complete snow removal.
- If the wheels slip, shift into a lower gear to reduce forward speed.
- Run the snowthrower for a few minutes after clearing snow so that moving parts do not freeze. Engage the auger to clear any remaining snow from inside the housing.
- Do not overload the snowthrower by clearing snow at too fast a rate. If the engine slows down, shift to a lower gear to reduce forward speed.
- Always use full throttle (maximum engine speed) when throwing snow.
- In wet or slushy conditions, maintain maximum engine speed and do not overload the engine to prevent clogging the discharge chute.
- In some winter weather conditions, controls and moving parts may freeze. Therefore, when any control becomes hard to operate, stop the engine and wait for all moving parts to stop; then check all parts for freeze up. **Do not use excessive force or try to operate the controls when they are frozen.**

Maintenance

Recommended Maintenance Schedule

Service Item	Service Operation	Initial	5 Hours	10 Hours	15 Hours	25 Hours	100 Hours	At Storage
Check the engine oil level	Check the oil level **before each use** and add oil if necessary.	X	X		X	X		X
Change the engine oil	Change the engine oil.					X		X
Auger gear box	Check the auger gear box oil. Add grease if necessary.	X		X				X
Adjust the traction drive	Adjust the traction drive.	X	X		X	X		
Replace the traction drive belt	Replace the traction drive belt as needed.							
Adjust the auger/impeller drive belt	Adjust the auger/impeller drive belt as needed.		X		X	X		
Replace the auger/impeller drive belt	Replace the auger/impeller drive belt as needed.							
Scraper and skids	Adjust the scraper and the skids.	X			X			
Speed selector	Adjust the speed selector as needed.	X						
Lubricating the snowthrower	Oil and grease the internal moving parts.				X			X
Spark plug	Clean, inspect, and gap. Replace if necessary.						X	
Fuel tank	Drain the gasoline and run the engine to dry out the tank and the carburetor.							X

CAUTION

POTENTIAL HAZARD
- **If you leave the wire on the spark plug, someone could start the engine.**

WHAT CAN HAPPEN
- **Accidental starting of engine could seriously injure you or other bystanders.**

HOW TO AVOID THE HAZARD
- **Pull the wire off of the spark plug before you do any maintenance. Also, push it aside so it does not accidentally contact the spark plug.**

Checking the Engine Oil Level

Check the oil level every five operating hours or each time you use the snowthrower.

1. Move the snowthrower to a level surface.
2. Clean the area around the dipstick (Fig. 14).
3. Remove the dipstick from the crankcase (Fig. 14).
4. Wipe the dipstick clean with a clean cloth.
5. Fully install the dipstick.

Note: To ensure an accurate oil reading, you must fully install the dipstick.

6. Remove the dipstick from the crankcase (Fig. 14).
7. Read the oil level on the dipstick.
8. If the oil level is below the Full mark, slowly add oil, checking the level frequently, until the dipstick reads full.

   Use only a high–quality, SAE 5W–30 or SAE 10 weight, detergent oil, having the American Petroleum Institute (API) “service classification”—SE, SF or SG.

IMPORTANT: Do not overfill the crankcase and run the engine; engine damage will result. Drain the excess oil until the oil level on the dipstick reads Full.

9. Install the dipstick.

Changing the Engine Oil

Initially, change the oil after the first two hours of operation; thereafter, under normal conditions, change the oil as given in the *Recommended Maintenance Schedule* on page 16. If possible, run the engine just before changing oil because warm oil flows better and carries more contaminants.

1. Pull the wire off of the spark plug and ensure that the wire does not contact the plug (Fig. 19).
2. Clean the area around the oil drain plug (Fig. 20).
3. Slide the oil drain pan below the drain extension and remove the oil drain plug (Fig. 20).

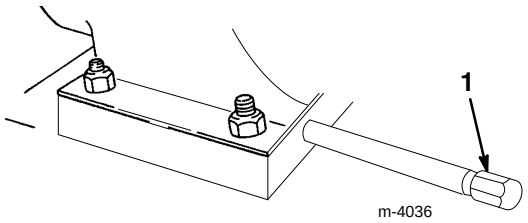

Figure 20

1. Drain plug

4. After draining the oil, install the oil drain plug.
5. Fill the crankcase with oil. *Refer to Filling the Engine with Oil* on page 10.
6. Wipe up any spilled oil.

Checking/Adding Auger Gear Box Grease

Check the auger gear box grease initially, after every ten hours of use, and upon removal from annual storage.

1. Pull the wire the off of the spark plug and ensure that the wire does not contact the plug (Fig. 19).
2. Position the snowthrower on a level surface.
3. Clean the area around the pipe plug (Fig. 21).
4. Remove the pipe plug from the gear box (Fig. 21).

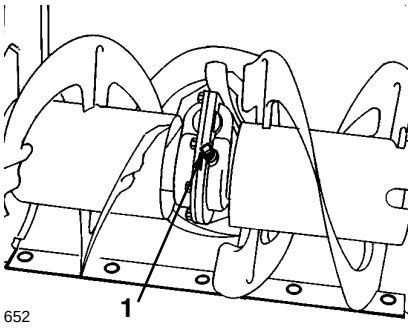

Figure 21

1. Pipe plug

5. Check the level of grease in the gear box. The grease must be visible through the opening.
6. If the level of grease is low, add *Lubriplate MAG-1* grease (a low temperature, high pressure grease) to the gear box until the point of overflow.
7. Install the pipe plug in the gear box.

Adjusting the Traction Drive

If the speed selector shifts properly but the snowthrower does not drive in the reverse or forward speeds, adjust the traction drive.

1. Pull the wire off of the spark plug and ensure that the wire does not contact the plug (Fig. 19).
2. Check adjustment per steps 3 and 5 of *Installing the Traction Rod*, page 8.
3. Make adjustments if required.
4. If the linkage is adjusted correctly and the problem persists, contact your local Authorized Service Dealer.

Replacing the Traction Drive Belt

When the traction drive belt becomes worn, oil–soaked, or otherwise damaged, replace the belt. You can obtain a new belt from your Authorized Service Dealer.

1. Pull the wire off of the spark plug and ensure that the wire does not contact the plug (Fig. 19).
2. Remove the three screws holding the belt cover in place and set the cover aside (Fig. 22).
3. Loosen the auger brake arm assembly by loosening the rear screw and removing the front screw (Fig. 23).
4. Remove the idler pulley spring (Fig. 23), allowing the brake arm assembly hang free, but out of the way.
5. Remove the two screws, washers, and lock washers that secure the belt guide (Fig. 24).
6. Remove the engine crankshaft screw, lock washer, and washer (Fig. 24).
7. Separate and remove the engine pulley sheave (Fig. 24).
8. Remove the auger/impeller drive belt from the engine pulley, leaving the belt looped around the large auger/impeller pulley.
9. Remove the center engine pulley (Fig. 24).
10. Remove the traction belt from the traction pulley and engine crankshaft (Fig. 24).
11. Pull the traction idler pulley outward and install the new traction belt (Fig. 24).
12. Install the center engine pulley. Make sure not to pinch the traction drive belt.
13. Pull the idler pulley outward and loop the auger/impeller drive belt in the front of the engine pulley, ensuring that the belt is on the inside of the idler pulley and belt guide (Fig. 24).
14. Install the engine pulley sheave, washer, lock washer, and crankshaft screw.

    IMPORTANT: Ensure that the indexing rib in the engine pulley sheave is aligned with the indexing notch in the center engine pulley (Fig. 25).
15. Ensure that the brake pad is properly installed on the brake arm. The angled cut-off on the brake pad must be positioned as shown in Figure 26.
16. Install the two screws that secure the auger brake arm assembly, ensuring that the tabs fit into the holes in left side of the snowthrower (Fig. 27).
17. While someone squeezes the auger/impeller control lever against the handgrip, install the belt guide using the two screws, washers, and lock washers.
18. Check and adjust the belt guide, ensuring that it does not contact any part of the engine pulley and is 1/8 in. (3 mm) from the belt.
19. Check and adjust the auger drive linkage. Refer to steps 5–7 of *Installing the Auger/Impeller Drive Control Linkage*, page 9.
20. Install the idler pulley spring.
21. Install the belt cover with the three screws.
22. **If the auger and impeller are rotating when the engine is running and the auger/impeller control lever is not engaged, immediately stop the** engine and bring the snowthrower to an Authorized Service Dealer for repair.

IMPORTANT: Do not operate the snowthrower if the auger and impeller rotate when the auger/impeller control lever is not engaged.

Adjusting the Auger/Impeller Drive Belt

An auger/impeller that belt slips results in decreased snowthrowing performance and requires either an adjustment or a new belt.

DANGER

POTENTIAL HAZARD
- **Improper adjustment may cause injury if the auger/impeller turns when disengaged.**

WHAT CAN HAPPEN
- **The rotating impeller or auger can cut off or injure fingers or hands.**

HOW TO AVOID THE HAZARD
- **Keep your face, hands, feet, and any other part of your body or clothing away from concealed, moving, or rotating parts.**
- **Ensure that the impeller brake arm clearance is maintained.**
- **Do not adjust the auger/impeller drive belt too tight because it may cause the auger/impeller to turn when the control lever is in the disengaged position. If this occurs, decrease belt tension.**

IMPORTANT: After 5–10 hours of snowthrower operation with a new auger/impeller drive belt, check the belt to ensure proper tension is being maintained.

1. Pull the wire the off of the spark plug and ensure that the wire does not contact the plug (Fig. 19).
2. Check the adjustment per steps 5 through 7 of *Installing the Auger/Impeller Drive Control Linkage*, page 9. Make adjustments if required.
3. Install the wire on the spark plug.
4. Check the tension of the belt by operating the auger.
5. If belt still slips, replace the belt. Refer to *Replacing the Auger/Impeller Drive Belt*, page 19.
6. **If the auger and impeller are rotating when the engine is running and the auger/impeller control lever is not engaged, immediately stop the** engine and bring the snowthrower to an Authorized Service Dealer for repair.

IMPORTANT: Do not operate the snowthrower if the auger and impeller rotate when the auger/impeller control lever is not engaged.

Replacing the Auger/Impeller Drive Belt

When the auger/impeller drive belt becomes worn, oil–soaked, or otherwise damaged, replace the belt. You can obtain a new belt from your Authorized Service Dealer.

IMPORTANT: After five to ten hours of operation with a new auger/impeller drive belt, check the belt to ensure the proper belt tension.

1. Pull the wire off of the spark plug and ensure that the wire does not contact the plug (Fig. 19).
2. Remove the three screws that secure the belt cover in place and set the cover aside (Fig. 22).

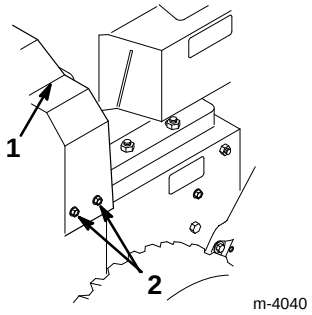

Figure 22

1. Upper belt cover
2. Screws

3. Loosen the auger brake arm assembly by loosening the rear screw and removing the front screw that fastens the auger brake arm assembly to the frame (Fig. 23).
4. Remove the idler pulley spring (Fig. 23), allowing the brake arm assembly to hang free, but out of the way.

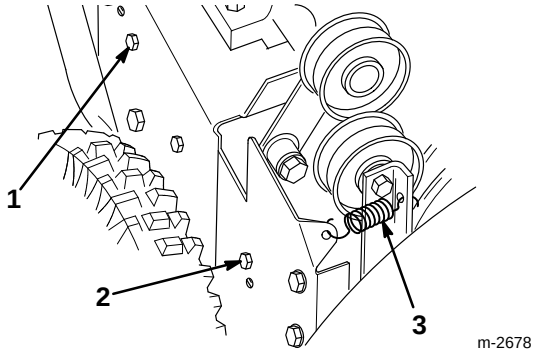

Figure 23

1. Rear screw
2. Front screw
3. Idler pulley spring

5. Remove the two screws, washers, and lock washers that secure the belt guide (Fig. 24).

6. Remove the engine crankshaft screw, lock washer, and washer (Fig. 24).

7. Separate and remove the engine pulley sheave (Fig. 24).

8. Remove the auger/impeller drive belt from the engine pulley and large auger/impeller pulley (Fig. 24).

9. Pull the idler pulley outward and install a new belt around the large auger/impeller pulley (Fig. 24).

10. Loop the belt in the front of the engine pulley, ensuring that the belt is on the inside of the idler pulley and belt guide (Fig. 24).

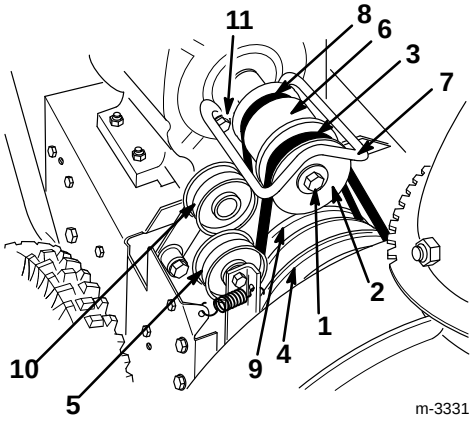

Figure 24

1. Engine crankshaft screw, lock washer, and washer
2. Engine pulley sheave
3. Auger/impeller drive belt
4. Large auger/impeller pulley
5. Idler pulley
6. Center engine pulley
7. Belt guide
8. Traction belt
9. Traction pulley
10. Traction idler pulley
11. Screw, washer, and lock washer

11. Install the engine pulley sheave, washer, lock washer, and engine crankshaft screw. Make sure to not pinch the drive belt.

IMPORTANT: Ensure that the indexing rib in the engine pulley sheave aligns with the indexing notch in the center engine pulley (Fig. 25).

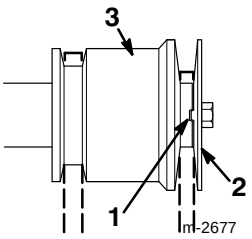

Figure 25

1. Indexing rib in indexing notch
2. Engine pulley sheave
3. Center engine pulley

12. Ensure that the brake pad is properly installed on the brake arm. The angled cut-off on the brake pad must be positioned as shown in Figure 26.

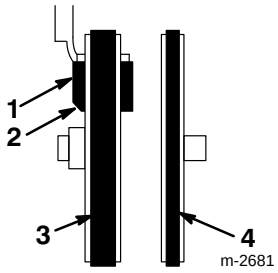

Figure 26

View from left side of unit

1. Brake pad
2. Angled cut-off
3. Auger/impeller drive belt
4. Traction drive belt

13. Install the two screws that secure the auger brake arm assembly. Ensure that the tabs fit into the holes in left side of the snowthrower (Fig. 27).

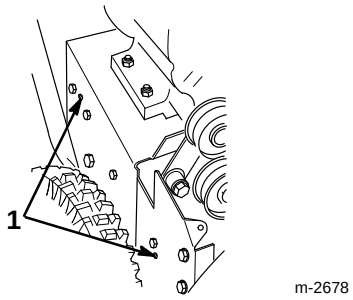

Figure 27

1. Tabs in holes

14. While someone squeezes the auger/impeller control lever against the handgrip, install the belt guide using the two screws, washers, and lock washers.

15. Check and adjust the belt guide, ensuring that it does not contact any part of the engine pulley and is 1/8 in. (3 mm) from the belt.

16. Check and adjust the auger drive linkage. Refer to steps 5–7 of *Installing the Auger/Impeller Drive Control Linkage*, page 9.

17. Install the idler pulley spring.

18. Install the belt cover with the three screws.

19. **If the auger and impeller are rotating when the engine is running and the auger/impeller control lever is not engaged, immediately stop the** engine and bring the snowthrower to an Authorized Service Dealer for repair.

IMPORTANT: Do not operate the snowthrower if the auger and impeller rotate when the auger/impeller control lever is not engaged.

Adjusting the Scraper and Skids

Adjust the scraper to compensate for wear and to ensure that the auger does not contact the pavement.

1. Pull the wire off of the spark plug and ensure that the wire does not contact the plug (Fig. 19).
2. Check the tire pressure in both tires to ensure that they are inflated equally between 7 and 15 psi (48 and 103 kPa).
3. Move the snowthrower to a level surface.
4. Loosen the four flange nuts that secure both skids to the auger side plates (Fig. 28) until the skids can slide up and down easily.

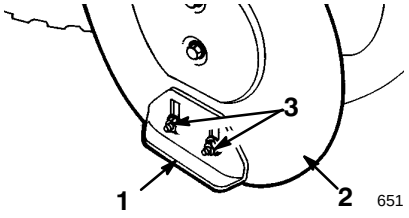

Figure 28

1. Skid
2. Auger side plate
3. Flange nuts

5. Support the **auger blades** so they are 1/8 in. (3 mm) off the ground.

Note: The scraper should be higher above than 1/8 in. (3 mm) if the pavement surfaces are cracked, rough, or uneven.

6. Check the scraper blade adjustment. The scraper blade should be 1/8 in. (3 mm) above and parallel to a level surface.
7. To adjust the scraper blade, loosen the five screws (Fig. 29), level the blade, and tighten the five screws.

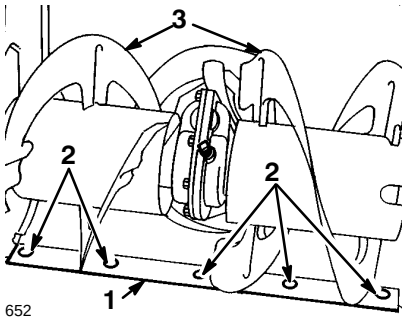

Figure 29

1. Scraper
2. Mounting screws
3. Auger blades

For Concrete and Asphalt Surfaces

If the snowthrower does not clean up the snow close enough to the pavement, adjust the skids to lower the scraper; if the scraper catches on cracks in the pavement, adjust the skids to raise the scraper.

1. Support the scraper at least 1/8 in. (3 mm) above the pavement.
2. Move the skids down to sit flat on the ground.
3. Tighten the four flange nuts that secure both skids to the auger side plates (Fig. 28).

For Gravel Surfaces

For gravel or crushed rock surfaces, adjust the skids to prevent picking up rocks.

1. Support the auger blades a few inches (centimeters) above the ground.
2. Slide the skids down as far as possible.
3. Tighten the four flange nuts.

Adjusting the Speed Selector

If there is slow or no ground speed in the No.1 speed selection, or the speed selector cannot be moved into the No. 3 speed selection, adjust the speed selector linkage.

1. Pull the wire off of the spark plug and ensure that the wire does not contact the plug (Fig. 19).
2. Move the speed selector (Fig. 15) on the control panel to the R_2 (reverse) position.
3. Remove the cotter pin and washer.
4. Pull the speed selector rod out of the hole in the speed selector arm (Fig. 5).

5. Adjust the forward speed by rotating the speed selector rod in the trunnion (Fig. 6).

   Lengthening the rod makes the forward speed faster. Shortening the rod makes the forward speed slower.

6. Insert the speed selector rod into the speed selector arm and secure it with the washer and cotter pin.

Lubricating the Snowthrower

Lightly lubricate all moving parts according to the *Recommended Maintenance Schedule* on page 16.

1. Pull the wire off of the spark plug and ensure that the wire does not contact the plug (Fig. 19).
2. Drain gasoline from fuel tank. Refer to *Emptying the Fuel Tank* on page 22.
3. Tip the snowthrower forward onto the auger housing and block it so that it cannot fall.
4. Remove the eight screws that secure the back and bottom covers and remove the covers (Fig. 30).

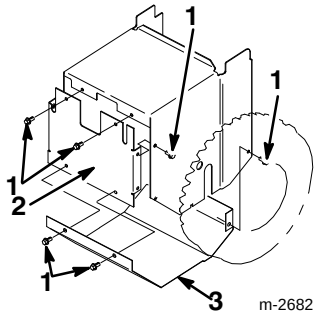

Figure 30

1. Screws
2. Back cover
3. Bottom cover

5. Lightly lubricate the snowthrower with light oil as shown in Figures 31 and 32.

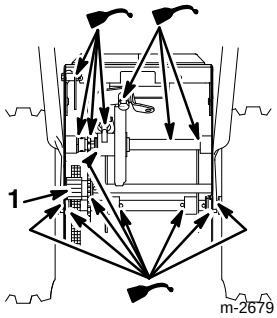

Figure 31

1. Axle gear

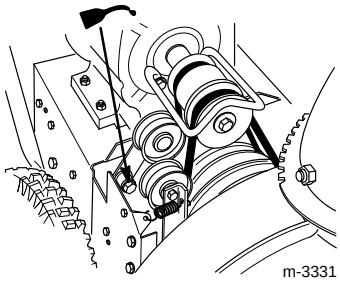

Figure 32

6. Wipe up any excess oil.
7. Lightly grease the axle gear (Fig. 31).
8. Wipe up any excess grease.

IMPORTANT: Do not get oil or grease on the rubber wheel or friction drive plate. This can cause the wheel to slip and the rubber to deteriorate.

Replacing the Spark Plug

Check the spark plug periodically as given in the *Recommended Maintenance Schedule* on page 16. If the electrodes in the center of the plug are dark or have deteriorated, install a new Champion RJ–19LM spark plug or equivalent.

1. Clean the area around the spark plug.
2. Pull the wire off of the spark plug (Fig. 19) and remove the plug from the cylinder head.

IMPORTANT: Replace a cracked, fouled or dirty spark plug. Do not sand blast, scrape or clean electrodes because grit may eventually release from the plug and fall into the cylinder, causing engine damage.

3. Set the air gap between the electrodes of the spark plug at 0.030 in. (0.76 mm) (Fig. 33).

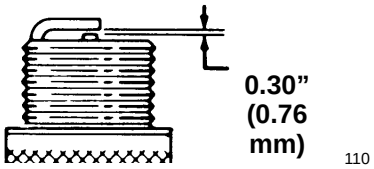

Figure 33

4. Install the spark plug in the cylinder head.
5. Torque the plug to 15 ft-lb (20.4 N·m).
6. Push the wire onto the spark plug (Fig. 19).

Emptying the Fuel Tank

1. Pull the wire off of the spark plug and ensure that the wire does not contact the plug (Fig. 19).

2. Close the fuel shut-off valve located under the fuel tank by rotating valve to the left (Fig. 17).

WARNING

POTENTIAL HAZARD
- **Gasoline is highly flammable.**

WHAT CAN HAPPEN
- **Gasoline can be ignited and cause serious personal injury.**

HOW TO AVOID THE HAZARD
- **Drain gasoline outdoors.**
- **Drain gasoline from a cold engine only.**
- **Wipe up any gasoline that may have spilled.**
- **Do not drain gasoline near any open flame or where gasoline fumes may be ignited by a spark.**
- **Do not smoke a cigar, cigarette or pipe when handling gasoline.**

3. Place a clean drain pan under the shut-off valve.
4. Loosen the hose clamp that secures the fuel line to the valve and slide the line off of the valve (Fig. 17).
5. Open the valve by rotating it to the right. This allows the fuel to flow into the drain pan.
6. Install the fuel line and secure it with the hose clamp.
7. Install the spark plug wire.
8. Start the engine and run it until it stops.

Storage

Preparing the Fuel System

1. Add stabilizer/conditioner to the fuel tank as directed.
2. Run the engine for ten minutes to distribute conditioned fuel through the fuel system.
3. Stop the engine, allow it to cool, and drain the fuel tank or run the engine until it stops.
4. Start the engine and run it until it stops.
5. Choke or prime the engine, start it a third time, and run the engine until it will not restart.
6. Dispose of fuel properly. Recycle per local codes.

Note: Do not store stabilized gasoline over 90 days.

Preparing the Engine

7. Remove the spark plug from the cylinder head.
8. Pour two teaspoons of oil into the spark plug hole.
9. Install the spark plug, but do not install the wire.
10. Pull the recoil starter slowly to distribute oil on inside of the cylinder.
11. Change the engine oil. Refer to *Changing the Engine Oil* on page 17.

Preparing the Snowthrower

12. Lubricate the snowthrower. Refer to *Lubricating the Snowthrower* on page 22.
13. Clean the snowthrower.
14. Touch up chipped surfaces with paint. Paint is available from an Authorized Service Dealer. Sand the affected areas before painting, and use a rust preventative to prevent the metal parts from rusting.
15. Tighten all screws and nuts. Repair or replace any damaged parts.
16. Cover the snowthrower and store it in a clean, dry place out of the reach of children. Allow the engine to cool before storing it in any enclosure.

WARNING

POTENTIAL HAZARD
- **Gasoline fumes are highly flammable, explosive, and dangerous if inhaled.**

WHAT CAN HAPPEN
- **If the product is stored in an area with an open flame, the gasoline fumes may be ignited, causing an explosion.**

HOW TO AVOID THE HAZARD
- **Do not store the snowthrower in a house (living area), basement, or any other area where ignition sources may be present, such as hot water and space heaters, clothes dryers, furnaces, and other like appliances.**

Accessories

You can obtain the following snowthrower accessories from your Authorized Service Dealer:

- Tire chain kit
- Drift breaker
- Light kit
- Snow cab

Gas Powered
Snow
Products

The Toro Total Coverage Guarantee

A Full Two-Year Warranty
(Limited Warranty for Commercial Use)

What Is Covered By This Express Warranty?

The Toro Company promises to repair any Toro Product used for normal residential purposes* if defective in materials or workmanship for a period of two years from the date of purchase. For single stage snowthrowers, the cost of parts and labor is included, but the customer pays the transportation costs.

Transportation within a 15 mile radius of the servicing dealer is covered under this warranty for two-stage snowthrowers.

What Products Are Covered By This Warranty?

This warranty applies to all gasoline powered snow products.

How About Commercial Use?

Toro Consumer Products used for commercial, institutional or rental use are covered by a limited warranty for 45 days from the date of purchase.

How Do You Get Warranty Service?

Should you feel your Toro Product contains a defect in material or workmanship, contact the dealer who sold you the product or any Authorized Toro Service Dealer or Toro Master Service Dealer. The Yellow Pages of your telephone directory is a good reference source. The dealer will either arrange service at his/her dealership or recommend another Authorized Service Dealer who may be more convenient. You may need proof of purchase (copy of registration card, sales receipt, etc.) for warranty validation.

If for any reason you are dissatisfied with the Service Dealer's analysis of the defect in materials or workmanship or if you need a referral to a Toro Service Dealer, please feel free to contact us at the following address:

Toro Customer Service Department
8111 Lyndale Avenue South
Bloomington, MN 55420–1196
612–888–8801
800–348–2424

What Must You Do To Keep The Warranty In Effect?

You must maintain your Toro Product by following the maintenance procedures described in the operator's manual. Such routine maintenance, whether performed by a dealer or by you, is at your expense.

What Does This Warranty Not Cover? and How Does Your State Law Relate To This Warranty?

There is no other express warranty except for special emission system coverage on some products and the Toro Starting Guarantee on GTS Engines. This express warranty does not cover:

- Cost of regular maintenance service or parts, such as filters, fuel, lubricants, tune-up parts, blade sharpening, brake and clutch adjustments.

- Any product or part which has been altered or misused or required replacement or repair due to normal wear, accidents, or lack of proper maintenance.

- Repairs necessary due to improper fuel, contaminants in the fuel system, or failure to properly prepare the fuel system prior to any period of non-use over three months.

- Pickup and delivery charges for distances beyond a 15 mile radius from an Authorized Toro Service Dealer (covered products only).

All repairs covered by this warranty must be performed by an Authorized Toro Service Dealer using Toro approved replacement parts.

Repair by an Authorized Toro Service Dealer is your sole remedy under this warranty.

The Toro Company is not liable for indirect, incidental or consequential damages in connection with the use of the Toro Products covered by this warranty, including any cost or expense of providing substitute equipment or service during reasonable periods of malfunction or non–use pending completion of repairs under this warranty. Some states do not allow exclusions of incidental or consequential damages, so the above exclusion may not apply to you.

This warranty gives you specific legal rights, and you may also have other rights which vary from state to state.

* Normal residential purposes means removing snow on the same lot as your home. Use at more than one location is considered commercial use and the commercial use warranty would apply.

Countries Other than the United States or Canada

Customers who have purchased Toro Products exported from the United States or Canada should contact their Toro Distributor (Dealer) to obtain guarantee policies for your country, province, or state. If for any reason you are dissatisfied with your Distributor's service or have difficulty obtaining guarantee information, contact the Toro importer. If all other remedies fail, you may contact us at The Toro Company.

Rev. 5/17/1999