Form No. 3322-814

824 XL Power Throw™

Snowthrower

Model No. 38086—200000001 and Up

Operator’s Manual

Pour obtenir gratuitement une version en français de ce manuel, écrivez à l’adresse ci-dessous. N’oubliez pas d’indiquer les numéros de modèle et de série de votre produit.

The Toro Company, Attn: Parts Dept., 8111 Lyndale Ave S, Bloomington, MN 55420–1196

Contents

	Page
Introduction	2
Safety	3
General Snowthrower Safety	3
Toro Snowthrower Safety	4
Safety Decals and Instructions	6
Assembly	7
Loose Parts	7
Installing the Handles	7
Installing the Speed Selector Rod	8
Installing the Traction Rod	9
Installing the Auger/Impeller Drive Control Linkage	9
Installing the Discharge Chute	10
Installing the Chute Control Gear	10
Checking the Tire Pressure	11
Installing the Skids	11
Checking the Auger Gear Box Oil	12
Before Starting	12
Filling the Engine with Oil	12
Filling the Fuel Tank with Gasoline	12
Operation	14
Operating Controls	14
Starting and Stopping the Engine	15
Freewheeling or Self–propelled Drive	17
Snowthrowing Tips	17
Maintenance	18
Recommended Maintenance Schedule	18
Checking the Engine Oil Level	19
Changing the Engine Oil	19
Checking the Auger Gear Box Oil	19
Adjusting the Traction Drive	20
Replacing the Traction Drive Belt	20
Adjusting the Auger/Impeller Drive Belt	21
Replacing the Auger/Impeller Drive Belt	21
Adjusting the Scraper and Skids	23
Adjusting the Speed Selector	23
Lubricating the Snowthrower	24
Replacing the Spark Plug	24
Emptying the Fuel Tank	25
Storage	25
Preparing the Fuel System	25
Preparing the Engine	25
Preparing the Snowthrower	25
Accessories	25
Warranty	Back Cover

WARNING

The engine exhaust from this product contains chemicals known to the State of California to cause cancer, birth defects, or other reproductive harm.

Introduction

Thank you for choosing a Toro product. We want you to be completely satisfied with your new purchase.

Read this manual carefully to learn how to operate and maintain your product properly. The information in this manual can help you and others avoid injury and product damage. Although Toro designs and produces safe products, you are responsible for operating the product properly and safely.

Whenever you contact your Authorized Service Dealer or the factory for help with service, genuine Toro parts, or additional information, have the model number and the serial number of your product handy. You will find the model number and serial number decal on the product as illustrated in Figure 1.

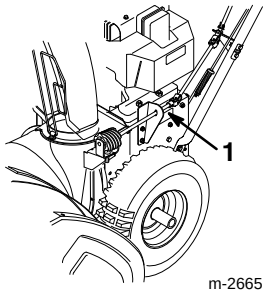

Figure 1

1. Model number and serial number decal

Write the product model number and serial number in the space below:

Model No. _____

Serial No. _____

This manual identifies potential hazards and has special safety messages that help you and others avoid personal injury and even death. DANGER, WARNING, and CAUTION are words used to identify the level of hazard.

©**The Toro Company – 1999**
All Rights Reserved

Printed in USA

DANGER signals an extreme hazard that will cause serious injury or death if you do not follow the recommended precautions.

WARNING signals a hazard that may cause serious injury or death if you do not follow the recommended precautions.

CAUTION signals a hazard that may cause minor or moderate injury if you do not follow the recommended precautions.

This manual uses two other words to highlight information. **Important** calls attention to special mechanical information and **Note** emphasizes general information worthy of special attention.

Safety

To ensure maximum safety, best performance, and to gain knowledge of the product, it is essential that you and any other operator of the snowthrower read and understand the contents of this manual before the motor is ever started. Pay particular attention to the safety alert symbol ⚠ which means CAUTION, WARNING, OR DANGER — "personal safety instruction." Read and understand the instruction because it has to do with safety. Failure to comply with instruction may result in personal injury.

The snowthrower is designed and tested to offer reasonably safe service; however, **failure to comply with the following instructions may result in personal injury.**

General Snowthrower Safety

The following instructions have been adapted from the ANSI/OPEI standard B71.3—1995 and ISO standard 8437:1989. Information or terminology specific to Toro snowthrowers is enclosed in parenthesis.

Training

- Read the operator's manual carefully. Be thoroughly familiar with the controls and the proper use of the equipment. Know how to stop the unit and disengage the controls quickly.
- Never allow children to operate the equipment. Never allow adults to operate the equipment without proper instruction.
- Keep the area of operation clear of all persons, particularly small children and pets.
- Exercise caution to avoid slipping or falling, especially when operating in reverse.

Preparation

- Thoroughly inspect the area where the equipment is to be used and remove all doormats, sleds, boards, wires, and other foreign objects.
- Disengage all clutches and shift into neutral before starting the engine.
- Do not operate the equipment without wearing adequate winter garments. Wear footwear which will improve footing on slippery surfaces.
- Handle fuel with care; it is highly flammable.
  - Use an approved fuel container.
  - Never add fuel to a running or hot engine.
  - Fill fuel tank outdoors with extreme care. Never fill fuel tank indoors.
  - Replace gasoline caps securely and wipe up spilled fuel.
- Use only the power cord supplied with the snowthrower and a receptacle appropriate for use with the cord for electric starting motors.
- Adjust the collector (auger) housing height to clear gravel or crushed rock surface. (This is not necessary on single-stage snowthrowers).
- Never attempt to make any adjustments while the engine is running, except where specifically recommended by manufacturer (Toro).
- Let engine and machine adjust to outdoor temperatures before starting to clear snow.
- The operation of any powered machine can result in foreign objects being thrown into the eyes. Always wear safety glasses or eye shields during operation or while performing an adjustment or repair.

Operation

- Do not put hands or feet near or under rotating parts. Keep clear of the discharge opening at all times.
- Exercise extreme caution when operating on or crossing gravel drives, walks, or roads. Stay alert for hidden hazards or traffic.
- After striking a foreign object, stop the engine, remove the wire from the spark plug, thoroughly inspect the snowthrower for any damage, and repair the damage before restarting and operating the snowthrower.
- If the unit should start to vibrate abnormally, stop the engine and check immediately for the cause. Vibration is generally a warning of trouble.

- Stop the engine whenever you leave the operating position, before unclogging the collector (auger)/impeller housing or discharge guide (chute), and when making any repairs, adjustments, or inspections.
- When cleaning, repairing, or inspecting, make certain the collector/impeller (auger/impeller or rotor blades) and all moving parts have stopped. Disconnect the spark-plug wire, and keep the wire away from the plug to prevent accidental starting. Disconnect the cable on electric motors.
- Do not run the engine indoors, except when starting it and for moving the snowthrower in or out of the building. Open the outside doors; exhaust fumes are dangerous.
- Do not clear snow across the face of slopes. Exercise extreme caution when changing direction on slopes. Do not attempt to clear steep slopes.
- Never operate the snowthrower without proper guards. plates or other safety protective devices in place.
- Never operate the snowthrower near glass enclosures, automobiles, window wells, drop-offs, etc. without proper adjustment of the snow discharge angle. Keep children and pets away.
- Do not overload the machine capacity by attempting to clear snow at too fast a rate.
- Never operate the machine at high transport speeds on slippery surfaces. Look behind and use care when moving in reverse.
- Never direct discharge at bystanders or allow anyone in front of the unit.
- Disengage power to the collector/impeller (auger/impeller or rotor blades) when snowthrower is transported or not in use.
- Use only attachments and accessories approved by the manufacturer of snowthrower (Toro), such as wheel weights, counterweights, cabs, etc. (Refer to your Authorized Service Dealer for accessories available for your snowthrower.)
- Never operate the snowthrower without good visibility or light. Always be sure of your footing, and keep a firm hold on the handles. Walk; never run.

Maintenance and storage

- Check all fasteners at frequent intervals for proper tightness to be sure the equipment is in safe working condition.
- Never store the machine with fuel in the fuel tank inside a building where ignition sources are present such as hot water and space heaters, clothes dryers, etc. Allow the engine to cool before storing in any enclosure.
- Always refer to this operator's manual for important details if the snowthrower is to be stored for an extended period.
- Maintain or replace safety and instruction labels, as necessary.
- Run the machine a few minutes after throwing snow to prevent freeze-up of the collector (auger)/impeller. (With the engine running, pull the recoil starter handle several times.)

Toro Snowthrower Safety

The following list contains safety information specific to Toro products or other safety information that you must know that is not included in the ANSI or ISO standards.

- **The rotating impeller/auger or rotor blades can cut off or injure fingers or hands.** Stay behind the handles and away from the discharge opening while operating the snowthrower. **Keep your face hands, feet, and any other part of your body or clothing away from concealed, moving, or rotating parts.**
- Before adjusting, cleaning, repairing, and inspecting the snowthrower, and before unclogging the discharge chute, **stop the engine, remove the key, and wait for all moving parts to stop**. Also, pull the wire off of the spark plug and keep it away from the plug to prevent someone from accidentally starting the engine.
- Use a stick, **not your hands** to remove obstructions from the discharge chute.
- **Before** leaving the operator's position behind the handles, stop the engine, remove the key, and wait for all moving parts to stop.
- Do not wear loose fitting clothing that could possibly get caught in moving parts.
- If a shield, safely device, or decal is damaged, illegible, or lost, repair or replace it before beginning operation. Also, tighten any loose fasteners.
- **Do not** smoke while handling gasoline.
- For two-stage snowthrowers, use the lower gear and, if applicable, shift into the rear wheel position when operating on slopes.
- **Do not** use the snowthrower on a roof.
- Do not touch the engine while it is running or soon after it is stopped because the engine will be hot enough to cause a burn. Do not add oil or check the oil level in the crankcase when the engine is running.

- Perform only those maintenance instructions described in this manual. Before performing any maintenance, service, or adjustment, stop the engine, remove the key and pull the wire from the spark plug, keeping it away from the plug to prevent someone from accidentally starting the engine. If major repairs are ever needed, contact your Authorized Toro Service Dealer.
- Do not over speed the engine by changing the governor settings.
- When storing the snowthrower for more than 30 days, drain the gasoline from the fuel tank to prevent a potential hazard. Store gasoline in a safety approved, red metal container. Remove the key from the ignition switch before storing the snowthrower.
- To ensure the best performance and safety, purchase only genuine Toro replacement parts and accessories to keep the Toro all Toro. **Do not use "Will Fit" replacement parts and accessories as they could cause a safety hazard.**

Before Operating

Read and understand the contents of this manual before operating the snowthrower. Become familiar with all controls and know how to stop the engine quickly.

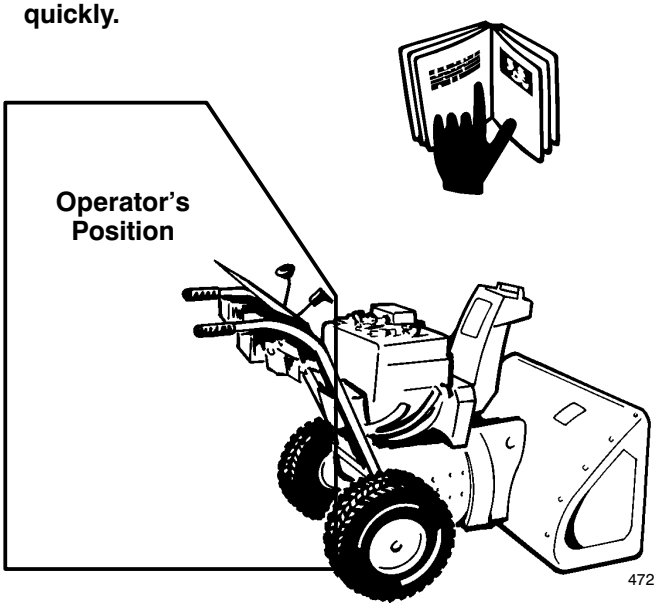

Caution: Improper use may result in loss of fingers, hands, or feet.

There is a high-speed impeller within two inches of the opening.

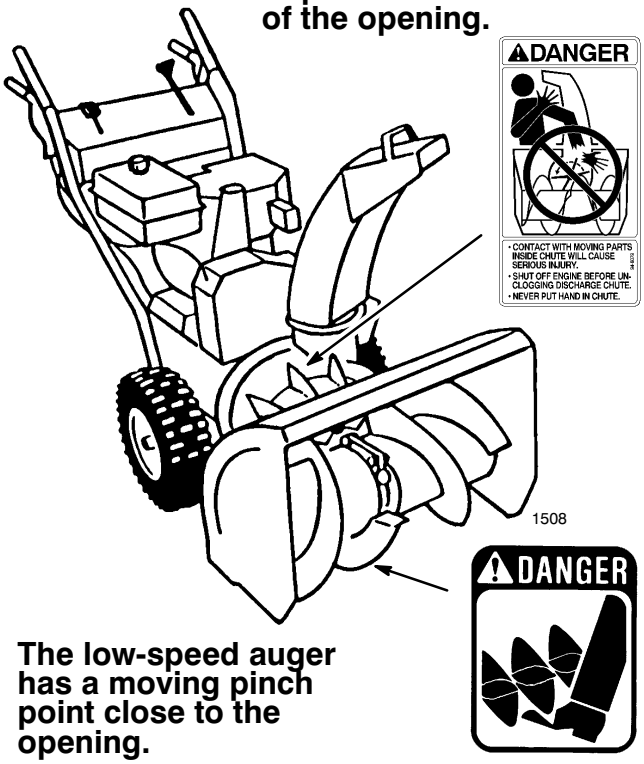

The low-speed auger has a moving pinch point close to the opening.

Safety Decals and Instructions

Safety decals and instructions are easily visible to the operator and are located near any area of potential danger. Replace any decal that is damaged or lost. Decals with Tecumseh part numbers must be obtained from Tecumseh Products Company. Decals with Toro part numbers must be obtained from the Toro Company.

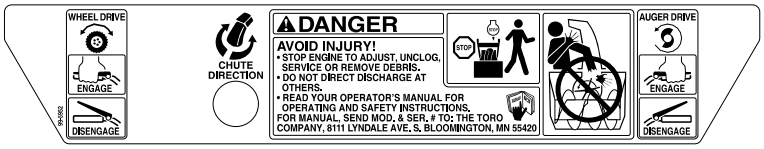

On Control Panel
(Toro Part No. 99-3214)



On Auger Housing
(Toro Part No. 53-7670)

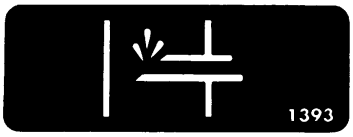

Next to Primer
(Tecumseh Part No. 36501)

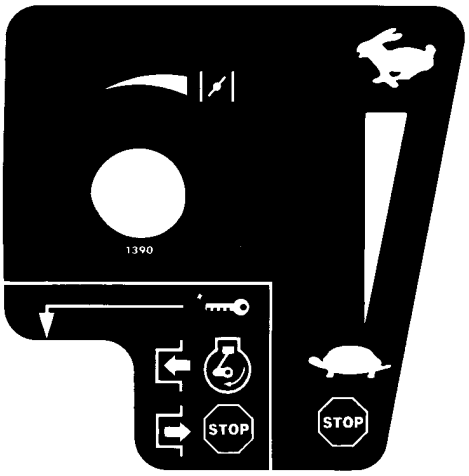

On Engine
(Tecumseh Part No. 35077)



On Engine
(Tecumseh Part No. 37119)



On Discharge Chute
(Toro Part No. 94-8079)

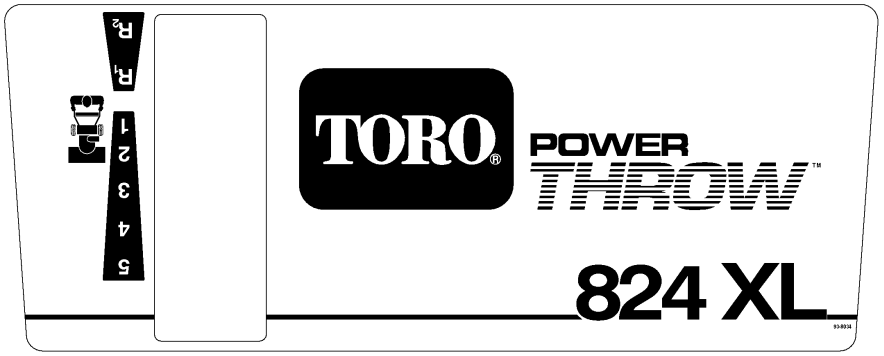

On Control Panel
(Toro Part No. 93-8034)

Assembly

Note: Determine left and right sides of snowthrower by standing in the normal operating position.

Loose Parts

Part	Qty	Use
Handles Capscrews Curved washers	2 4 4	Installing the handles
Speed selector rod Cotter pin Flat Washer	1 1 1	Installing the speed selector rod
Flange locknut Compression spring	1 1	Installing the traction rod
Lower link Flange locknut Flange nuts	1 1 1	Installing the auger/impellor drive control linkage
Discharge chute Plastic chute retainers Chute retainer plates Screws Locknuts	1 3 3 3 3	Installing the discharge chute
Worm gear Bracket Carriage screw Flat washer Locknut	1 1 1 1 1	Installing the chute control gear
Skids Flange head screw—3/4 in. (1.9 cm) Flat washers and locknuts	2 2 2	Installing the skids
Key	1	Starting and stopping the engine

Specifications and design are subject to change without notice.

Installing the Handles

1. Cut the tie straps that secure the control rods to the handle.
2. Remove the axle pins from both wheels (Fig. 2) and slide the wheels outward on the axle approximately one inch (2.5 cm).

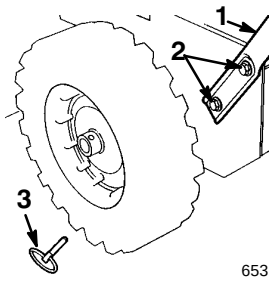

Figure 2

1. Handle
2. Capscrews and curved washers
3. Axle pin

3. Position the left handle and insert the traction rod through the loop in the lower traction rod (Fig. 3).

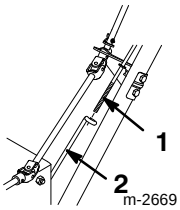

Figure 3

1. Traction rod
2. Lower traction rod

IMPORTANT: Ensure that the chute control rod assembly is between the engine and the traction rod (Fig. 4).

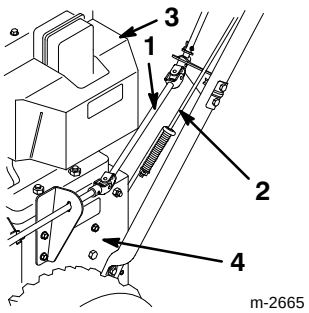

Figure 4

1. Chute control rod
2. Traction rod
3. Engine
4. Side plate

4. Position the left handle against the side of the snowthrower and align the handle mount holes with holes in the side plate (Fig. 4).

5. Secure the left handle with two capscrews and curved washers until they are finger tight (Fig. 2).

Note: The concave side of the curved washer goes against the outside of the handle.

6. Position the right handle against the right side of the snowthrower, align the handle mount holes with the holes in the side plate.

7. Secure the right handle with two capscrews and curved washers until they are finger tight.

8. Level the handles and torque the curved washers to 200 in–lb (2250 N·cm). If you do not have a torque wrench, tighten until snug.

9. Slide the wheels inward and install the axle pin through the holes in the wheel hub and through the **inner** hole of the axle (Fig. 5).

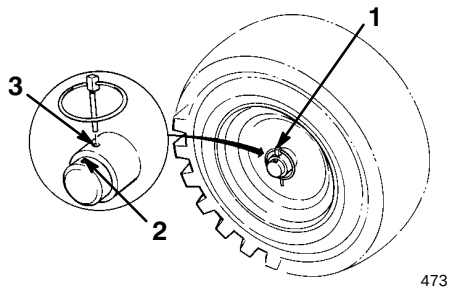

Figure 5

1. Axle pin
2. Outer axle hole
3. Inner axle hole and wheel hub

Note: If the snowthrower comes with optional tire chains, install the axle pin through the **outer** axle holes.

Installing the Speed Selector Rod

1. Pull the speed selector arm (Fig. 6) to the most outward position.

2. Move the speed selector (Fig. 18) on the control panel to the R_2 (reverse) position.

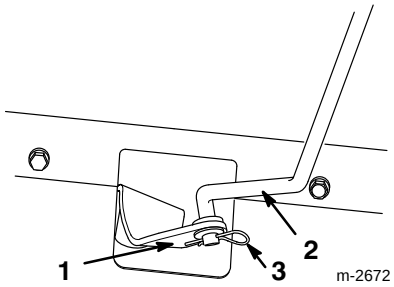

Figure 6

1. Speed selector arm
2. Speed selector rod
3. Flat washer and cotter pin

3. Rotate the speed selector rod in the trunnion (Fig. 7) until the bottom end of the rod can slip into the hole in the speed selector arm (Fig. 6).

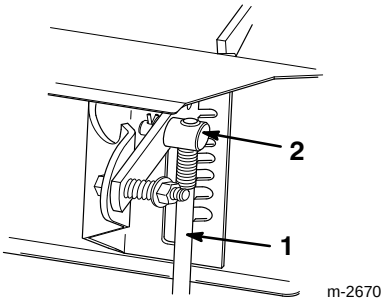

Figure 7

1. Speed selector rod
2. Trunnion

4. Install the speed selector rod into the selector arm, add one flat washer on the rod and secure it with a cotter pin (Fig. 6).

Note: If speed selector will not move into fifth gear or does not meet your speed requirements, adjust the speed selector. Refer to *Adjusting the Speed Selector* on page 23.

Installing the Traction Rod

1. Slide the spring onto the bottom of the traction control rod (Fig. 8).

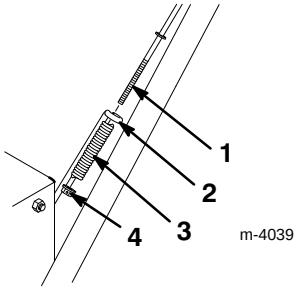

Figure 8

1. Traction control rod
2. Spring
3. Flange locknut

2. Thread a flange locknut (flange side up) onto the bottom of the traction control rod below the spring (Fig. 8).

3. Adjust the flange locknut up or down on the traction control rod until the distance between the top of the handgrip and the bottom of the traction control lever (Fig. 9) is approximately five inches (12.7 cm).

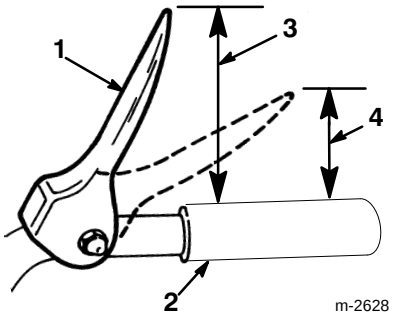

Figure 9

1. Traction control lever
2. Handgrip
3. Approximately 5 inches (12.7 cm)
4. Three to four inches (7.6 to 10.2 cm)

4. Move the speed selector (Fig. 18) into fifth gear.

5. Slowly pull the snowthrower backward while slowly depressing the traction control lever toward the handle.

The adjustment is correct when the wheels stop rolling backward and the distance between the top of the handgrip and the bottom of the traction control lever (Fig. 9) is three to four inches (7.6 to 10.2 cm)

6. Adjust the flange locknut, if necessary, to obtain this dimension.

7. Tighten the flange locknut securely.

Installing the Auger/Impeller Drive Control Linkage

1. Thread a flange nut (flange side down) onto the upper control rod located on the right handle (Fig. 10).

2. Install the lower link through the outer hole in the lower control rod (Fig. 10).

3. Insert the upper control rod through the loop in the lower link (Fig. 10).

4. Thread a flange locknut (flange side up) onto the bottom of the upper control rod below the loop in the lower link (Fig. 10).

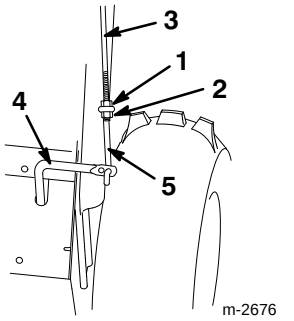

Figure 10

1. Hex flange nut
2. Flange locknut
3. Upper control rod
4. Lower control rod
5. Lower link

5. Check the distance between the top of the handgrip and the bottom of the auger/impeller control lever (Fig. 11). The distance should be approximately four inches (10.2 cm).

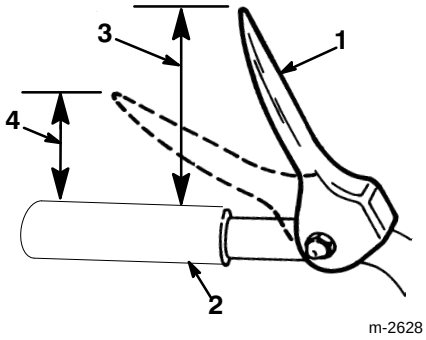

Figure 11

1. Auger/impeller control lever
2. Handgrip
3. Approximately four inches (10.2 cm)
4. Two inches (5.1 cm)

6. Press the auger/impeller control lever slowly toward the handgrip. The amount of force to compress the lever will increase noticeably when you remove the slack from the drive belt (approximately one-half of lever movement). The adjustment is correct when the force **begins** to increase and the distance between the top of the handgrip and the bottom of the auger/impeller control lever is two inches (5.1 cm).

Note: If the force does not noticeably increase, remove the belt cover (refer to *Replacing the Auger/ Impeller Drive Belt*, steps 1 and 2, on page 21) and measure the one- to two-inch (2.5 to 5.1 cm) dimension above the handgrip at the point where there is no slack in the auger drive belt.

7. Adjust the two flange locknuts, if necessary, to obtain this dimension.

8. Tighten the two flange locknuts securely (Fig. 10).

Installing the Discharge Chute

1. Apply a light coat of low-temperature grease to the chute ring.

2. Set the discharge chute (open side forward) onto the auger discharge opening so that the plastic chute retainers are on the chute ring (Fig. 12).

3. Tighten the machine screw and the locknut on the left side to position the plastic chute retainer against the chute retainer plate and to secure the discharge chute to the chute ring (Fig. 12).

4. Push the chute retainers on the right side toward the discharge chute (slotted) and tighten the machine screw (Fig. 12).

5. Ensure that the chute rotates freely on the chute ring. If the chute binds, move the right-hand retainer outward (Fig. 12).

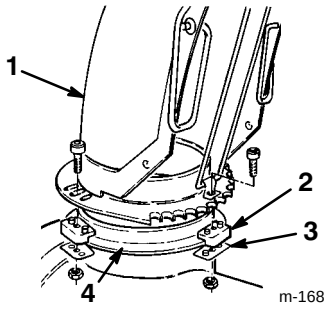

Figure 12

1. Discharge chute
2. Plastic chute retainer
3. Chute retainer plate
4. Chute ring

Installing the Chute Control Gear

1. Remove the two screws from the chute control rod bracket on left side of the frame (Fig. 13).

2. Remove the chute control rod bracket.

3. Insert the chute control rod through the hole in the bracket.

4. Install the bracket with the two screws (Fig. 13).

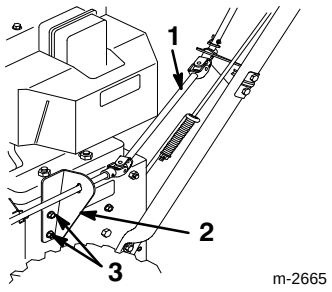

Figure 13

1. Chute control rod
2. Chute control rod bracket
3. Screws

---

5. Insert the carriage screw into the worm gear bracket mounting hole (Fig. 14).

6. Position the worm gear into the bracket, align the slotted holes in the worm gear and the bracket, and insert the chute gear rod through the slotted holes in the bracket and the worm gear (Fig. 14).

7. Loosely mount the worm gear and the bracket to the mounting flange with a carriage screw, a flat washer, and a locknut (Fig. 14).

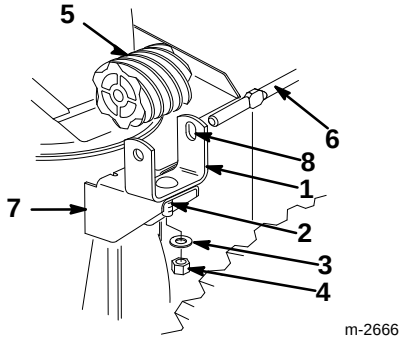

Figure 14

1. Worm gear bracket
2. Carriage screw
3. Flat washer
4. Locknut
5. Worm gear
6. Chute gear rod
7. Mounting flange
8. Slotted hole

---

8. Slide the worm gear into the teeth of the chute gear and tighten the locknut.

9. Operate the discharge chute control (Fig. 18) and move the worm gear slightly outward if the discharge chute control binds.

Checking the Tire Pressure

Check the pressure of the tires because they are over-inflated at the factory for shipping. Reduce the pressure in both tires to between 7 and 15 psi (48 and 103 kPa) equally.

Installing the Skids

1. Check the air pressure in the tires; refer to *Checking the Tire Pressure* on page 11.

2. Move the snowthrower onto a flat surface and check that the scraper (Fig. 15) is parallel to the ground. If it is not, adjust the scraper; refer to *Adjusting the Scraper and Skids* on page 23.

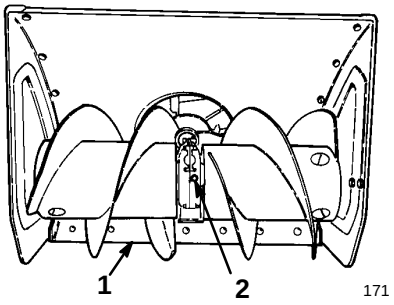

Figure 15

1. Scraper
2. Pipe plug

---

3. Remove two flange bolts and flat washers that secure the ends of the scraper to the side plates (Fig. 16).

4. Install the bolts through the rear slots in the skids, with the **washers between the skids and the side plates** (Fig. 16). Do not tighten the bolts.

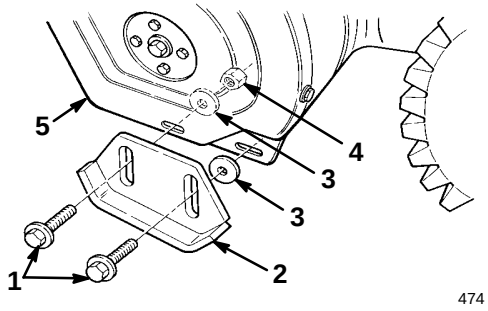

Figure 16

1. Flange bolts
2. Skid
3. Flat washers
4. Locknut
5. Sideplate

---

5. Install two flange bolts through the front slots of both the skids and the side plates, with the **washers between the skids and the side plates**. Do not tighten the bolts.

Note: The following steps describe how to adjust the skids for paved surfaces. For gravel or crushed rock surfaces, refer to *Adjusting the Scraper and Skids* on page 23.

6. Support the **scraper** 1/8 in. (3 mm) above a level surface if you use the snowthrower on **smooth pavement**.

Note: The scraper should be higher than 1/8 in. (3 mm) above the pavement if the pavement surfaces are cracked, rough or uneven.

7. Move the skids down to sit flat on the ground and tighten the four flange bolts that secure both skids to the side plates.

Checking the Auger Gear Box Oil

1. Move the snowthrower to a level surface.
2. Clean the area around the pipe plug to remove the dirt.
3. Remove the pipe plug from the gear box (Fig. 15).
4. Check the oil level in the gear box. The oil must be at the point of overflowing in the filler opening.
5. If the oil level is low, add *GL–5* or *GL–6 SAE 85–95 EP* transmission oil to the gear box until the point of overflow.

Note: Do not use synthetic gear oil.

6. Install the pipe plug in the gear box.

Before Starting

Filling the Engine with Oil

The engine comes from the factory with only a few ounces of oil in the crankcase. Before starting the engine, add oil. The crankcase holds 26 ounces (0.77 liters) of oil; however, because there is some oil in the crankcase, do not add the full amount at one time. Gradually add the oil according to the following procedure:

1. Move the snowthrower to a level surface to ensure an accurate oil level reading.
2. Clean the area around the dipstick (Fig. 17).

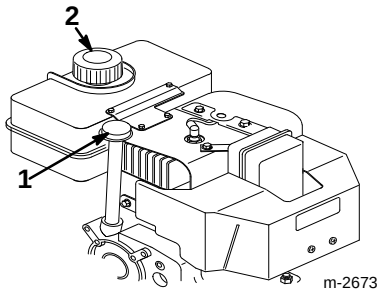

Figure 17

1. Dipstick
2. Fuel tank cap

3. Remove the dipstick from the crankcase (Fig. 17).
4. Slowly pour 3/4 of the total capacity of oil into the crankcase.

   Use only a high–quality, SAE 5W–30 or SAE 10 weight, detergent oil, having the American Petroleum Institute (API) “service classification”—SE, SF or SG. For extreme cold conditions (below 0°F or –18°C), use 0W–30 weight detergent oil, having the American Petroleum Institute (API) “service classification”—SE, SF or SG.
5. Wipe the dipstick clean with a clean cloth.
6. Fully install the dipstick.

Note: To ensure an accurate oil level reading, you must fully install the dipstick.

7. Remove the dipstick.
8. Read the oil level on the dipstick.
9. If the oil level is below the Full mark, slowly add oil, checking the level frequently (steps 5 through 8), until the dipstick reads Full.

IMPORTANT: Do not overfill the crankcase and run the engine; engine damage will result. Drain the excess oil until the oil level on the dipstick reads Full.

Filling the Fuel Tank with Gasoline

Use clean, fresh lead-free gasoline (including oxygenated or reformulated gasoline) with an octane rating of 87 or higher. To ensure freshness, purchase only the quantity of gasoline that you expect to use in 30 days. Using unleaded gasoline results in fewer combustion chamber deposits and longer spark plug life.

Engines certified to comply with California and U.S. EPA emission regulations for ULGE engines are certified to operate on regular unleaded gasoline, include EM and TWC (if so equipped) emission control systems, and do not include any user adjustable features.

IMPORTANT: Never use methanol, gasoline containing methanol, gasohol containing more than 10% ethanol, premium gasoline, or white gas. Using these fuels can damage the engine's fuel system.

DANGER

POTENTIAL HAZARD
- **In certain conditions gasoline is extremely flammable and highly explosive.**

WHAT CAN HAPPEN
- **A fire or explosion from gasoline can burn you, others, and cause property damage.**

HOW TO AVOID THE HAZARD
- **Use a funnel and fill the fuel tank outdoors, in an open area, when the engine is cold. Wipe up any gasoline that spills.**
- **Do not fill the fuel tank completely full. Add gasoline to the fuel tank until the level is 1/4" to 1/2" (6 mm to 13 mm) below the bottom of the filler neck. This empty space in the tank allows gasoline to expand.**
- **Never smoke when handling gasoline, and stay away from an open flame or where gasoline fumes may be ignited by a spark.**
- **Store gasoline in an approved container and keep it out of the reach of children.**
- **Never buy more than a 30-day supply of gasoline.**

DANGER

POTENTIAL HAZARD
- **When fueling, under certain circumstances, a static charge can develop, igniting the gasoline.**

WHAT CAN HAPPEN
- **A fire or explosion from gasoline can burn you and others and cause property damage.**

HOW TO AVOID THE HAZARD
- **Always place gasoline containers on the ground away from your vehicle before filling.**
- **Do not fill gasoline containers inside a vehicle or on a truck or trailer bed because interior carpets or plastic truck bed liners may insulate the container and slow the loss of any static charge.**
- **When practical, remove gas–powered equipment from the truck or trailer and refuel the equipment with its wheels on the ground.**
- **If this is not possible, then refuel such equipment on a truck or trailer from a portable container, rather than from a gasoline dispenser nozzle.**
- **If a gasoline dispenser nozzle must be used, keep the nozzle in contact with the rim of the fuel tank or container opening at all times until fueling is complete.**

Use a fuel stabilizer/conditioner regularly during operation and storage. A fuel stabilizer/conditioner cleans the engine during operation and prevents gum–like varnish deposits from forming in the engine during storage.

IMPORTANT: Do not use fuel additives except a fuel stabilizer during storage. We recommended that you do not use fuel stabilizers with an alcohol base such as ethanol, methanol, or isopropanol.

1. Clean the area around the fuel tank cap (Fig. 17).
2. Remove the cap from the fuel tank.
3. Using unleaded, regular gasoline, fill the tank to within 1/4 to 1/2 in. (6 to 13 mm) from the top of the tank, not into the filler neck.

IMPORTANT: Do not fill the tank with gasoline into the filler neck. This space is for fuel expansion. Do not fill the fuel tank completely full.

4. Install the fuel tank cap.
5. Wipe up any spilled gasoline.

Operation

Operating Controls

- **Auger/Impeller Control Lever** (Fig. 18)—To engage both the auger and the impeller, press the lever against the right handgrip. To disengage, release the lever.
- **Traction Control Lever** (Fig. 18)—To engage the traction (wheel drive), press the lever against the left handgrip. To stop traction, release the lever.
- **Speed Selector** (Fig. 18)—This control has five positions: two reverse and three forward speeds. To change speeds, move the speed selector to the desired position. The lever locks in a notch at each speed selection. The speed selector may shift with difficulty in heavy load conditions.

Note: Before shifting gears into or out of reverse, you must release the traction control lever. You may shift on–the–go between any of the **forward** speeds without releasing the traction control lever.

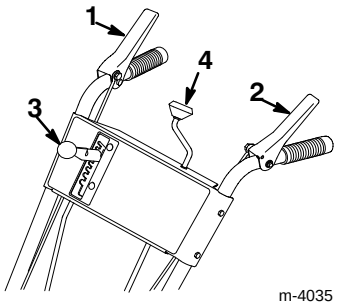

Figure 18

1. Auger/impeller control lever
2. Traction control lever
3. Speed selector
4. Discharge chute control

- **Ignition Switch** (Fig. 19)—Insert the key before starting the engine with the recoil starter. To stop the engine, remove the key.

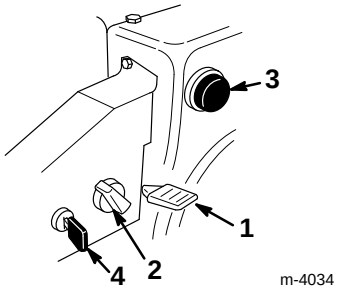

Figure 19

1. Throttle
2. Choke
3. Primer
4. Ignition switch

- **Discharge Chute Control** (Fig. 18)—Rotate the discharge chute control clockwise to move the discharge chute to the right and counterclockwise to move the chute to the left.
- **Throttle** (Fig. 19)—Move the throttle upward to increase the engine speed and downward to decrease the speed. Move the throttle completely downward to stop the engine.
- **Choke** (Fig. 19)—Rotate the choke to the On position to start a cold engine. As engine warms up, move the choke gradually to the Off position.
- **Primer** (Fig. 19)—Press the primer to pump a small amount of gasoline into the engine for improved cold-weather starting.
- **Fuel Shut–Off Valve** (Fig. 20)—Close the valve by rotating it to the right to stop the fuel flow. Open the valve by rotating it to the left. Close the valve when you do not use the snowthrower.

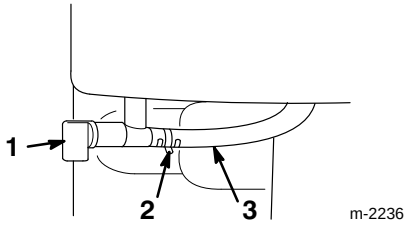

Figure 20

1. Fuel shut–off valve
2. Hose clamp
3. Fuel line

- **Recoil Starter** (Fig. 21)—The recoil starter is on the back side of the engine. Pull the recoil starter to start the engine.

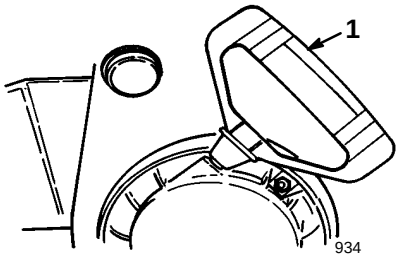

Figure 21

1. Recoil starter

- **Chute Deflector Handle** (Fig. 22)—The deflector handle, located on top of the discharge chute, controls the height of the snow stream.

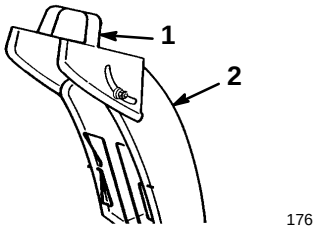

Figure 22

1. Chute deflector handle
2. Discharge chute

Starting and Stopping the Engine

Removing the Heater Box

If you operate the engine when the air temperature is above 40°F (4°C), remove the carburetor heater box (Fig. 23).

1. Pull the wire off of the spark plug and ensure that the wire does not contact the plug (Fig. 23).

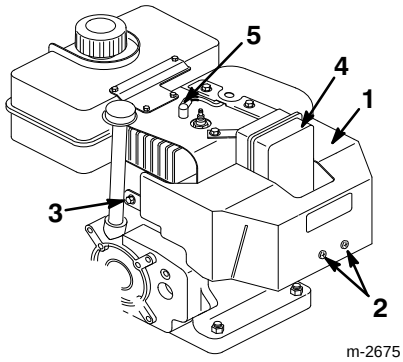

Figure 23

1. Carburetor heater box
2. Phillips screws
3. Hex head screw and lock washer
4. Hex head screw
5. Spark plug wire

2. Remove two Phillips screws, two hex head screws, and one lock washer that secure the heater box in place (Fig. 23).

3. Pull the choke knob off the choke rod (Fig. 19).

4. Lift the heater box up and away from the engine.

5. Install the choke knob on the mounting pin.

6. Place the spark plug wire on the spark plug (Fig. 23).

Starting the Engine

IMPORTANT: Check that the auger, impeller, and the discharge chute contain no obstructions before you operate the snowthrower. *Use a stick, not your hand, to remove an obstruction from the discharge chute.*

1. Move the throttle to the Fast position.

2. Ensure that the auger/impeller control lever and the traction control lever are in the Disengaged position (Fig. 18).

3. Open the fuel shut–off valve below the fuel tank (Fig. 20).

4. Rotate the choke (Fig. 19) to the On position.

5. Insert the ignition key (Fig. 19).

6. Cover the hole in the center of primer (Fig. 19) with your thumb and slowly push the primer three times. **Do not use the primer if the engine has been running or is hot.**

Note: Excessive priming may flood the engine and prevent it from starting.

7. Grasp the recoil starter handle (Fig. 21) and pull it out slowly until positive engagement results; then pull the handle vigorously to start the engine.

8. Keep a firm grip on the starter handle and return the rope slowly.

Note: If engine does not start or if the air temperature is –10°F (–23°C) or below, the engine may need additional priming. After pushing in the primer, try to start the engine before priming again.

9. After the engine starts, immediately rotate the choke (Fig. 19) to the 3/4 position. As the engine warms up, rotate the choke to the 1/2 position. When the engine warms sufficiently, rotate the choke to the Off position.

10. Move the speed selector (Fig. 18) to first gear, squeeze the traction control lever to the handgrip, and then release the traction control lever. If the snowthrower moves forward before engaging traction control lever or after releasing lever, see *Adjusting the Traction Drive* on page 20.

11. Ensure that the auger and the impeller do not rotate while the auger/impeller control lever is in the Disengaged position. Stand in the operator position and look around to the side of the auger housing (Fig. 24). A large screw head on the side of the auger housing will rotate whenever the auger and impeller rotate (Fig. 24). **If the auger and impeller rotate while the engine runs and the auger/impeller control lever is disengaged, stop the snowthrower immediately.** Refer to *Adjusting the Auger/Impeller Drive Belt* on page 21. If the problem persists, bring the snowthrower to an Authorized Service Dealer for service.

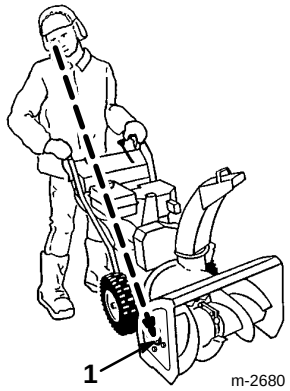

Figure 24

1. Large screw head

IMPORTANT: Do not operate the snowthrower if the auger and impeller rotate when auger/impeller control lever is disengaged.

Before Stopping the Engine

1. Engage the auger to clear any remaining snow from inside the housing.

2. Run the engine for a few minutes to dry off any accumulated moisture.

3. With the engine running, pull the recoil starter with a rapid, continuous full arm stroke three or four times. This helps prevent the recoil starter from freezing up.

Note: Pulling the recoil starter rope produces a loud, clattering sound. This does not harm the engine or the starter.

Stopping the Engine

1. Release the traction and the auger/impeller control levers (Fig. 18).

2. Move the throttle to the Slow position.

3. Remove the key from the ignition switch.

4. Wait for all moving parts to stop before leaving the operating position.

Freewheeling or Self–propelled Drive

You can operate the snowthrower with the self–propelling feature engaged or disengaged (freewheeling). There are two holes in each end of the axle. When you insert the axle pins through the outer axle holes and not through the wheel hubs (Fig. 5), the snowthrower freewheels. When you insert the axle pins through the holes in the wheel hubs and the inner axle holes (Fig. 5) and engage the traction control lever, the snowthrower propels itself.

Snowthrowing Tips

DANGER

POTENTIAL HAZARD
- **When the snowthrower is in operation, the impeller and auger can be rotating.**

WHAT CAN HAPPEN
- **The rotating auger/impeller can cut off or injure hands and feet.**

HOW TO AVOID THE HAZARD
- **Before adjusting, cleaning, repairing and inspecting the snowthrower, and before unclogging the discharge chute, *shut the engine off and wait for all moving parts to stop.* Also, pull the wire off of the spark plug and keep it away from the plug to prevent someone from accidentally starting the engine.**
- **Use a stick, *not your hands*, to remove an obstruction from the discharge chute.**
- **Stay behind the handles and away from the discharge opening while operating the snowthrower.**
- **Keep face, hands, feet, and any other part of your body or clothing away from concealed, moving or rotating parts.**

WARNING

POTENTIAL HAZARD
- **Stones, toys and other foreign objects may be picked up and thrown by the rotor blades.**

WHAT CAN HAPPEN
- **Thrown objects can cause serious personal injury to operator or bystanders.**

HOW TO AVOID THE HAZARD
- **Keep the area to be cleared free of all objects that could be picked up and thrown by rotor blades.**
- **Keep all children and pets away from area of operation.**

- When snowthrower is not being used, close the fuel shut–off valve and remove the key.
- Remove snow as soon as possible after it falls. This produces the best snow removal results.
- Adjust the skids to match the type of surface being cleaned. Refer to *Adjusting the Scraper and Skids* on page 23.
- The snowthrower is designed to clean snow down to the contact surface, but there are times when the front of the snowthrower may tend to ride up. If this happens, reduce forward speed by shifting into a lower gear. If the front still tends to ride up, lift up on both handles to hold down the front of the snowthrower.
- Discharge snow downwind whenever possible
- Overlap each swath to ensure complete snow removal.
- If the wheels slip, shift into a lower gear to reduce the forward speed.
- Run the snowthrower for a few minutes after clearing snow so that moving parts do not freeze. Engage the auger to clear any remaining snow from inside the housing.
- Do not overload the snowthrower by clearing snow at too fast a rate. If the engine slows down, shift to a lower gear to reduce the forward speed.
- Always use Fast throttle (maximum engine speed) when throwing snow.
- In wet or slushy conditions, maintain maximum engine speed and do not overload the engine to prevent clogging the discharge chute.
- In some snow and cold weather conditions, some controls and moving parts may freeze. Therefore, when any control becomes hard to operate, stop the engine and wait for all moving parts to stop; then check all parts for freeze up. **Do not use excessive force or try to operate the controls when they are frozen.**

Maintenance

Recommended Maintenance Schedule

Service Item	Service Operation	Initial	5 Hours	10 Hours	15 Hours	25 Hours	100 Hours	At Storage
Check the engine oil level	Check the oil level **before each use** and add oil if necessary.	X	X		X	X		X
Change the engine oil	Change the engine oil.					X		X
Auger gear box	Check the auger gear box oil. Add gear lube if necessary.	X		X				X
Adjust the traction drive	Adjust the traction drive.	X	X		X	X		
Replace the traction drive belt	Replace the traction drive belt as needed.							
Adjust the auger/impeller drive belt	Adjust the auger/impeller drive belt as needed.		X		X	X		
Replace the auger/impeller drive belt	Replace the auger/impeller drive belt as needed.							
Scraper and skids	Adjust the scraper and the skids.	X			X			
Speed selector	Adjust the speed selector as needed.	X						
Lubricating the snowthrower	Oil and grease the internal moving parts.				X			X
Spark plug	Clean, inspect, and gap. Replace if necessary.						X	
Fuel tank	Drain the gasoline and run the engine to dry out the tank and the carburetor.							X

CAUTION

POTENTIAL HAZARD
- **If you leave the wire on the spark plug, someone could start the engine.**

WHAT CAN HAPPEN
- **Accidental starting of engine could seriously injure you or other bystanders.**

HOW TO AVOID THE HAZARD
- **Pull the wire off of the spark plug before you do any maintenance. Also, push it aside so it does not accidentally contact the spark plug.**

Checking the Engine Oil Level

Check the oil level every five operating hours or each time you use the snowthrower.

1. Move the snowthrower to a level surface.
2. Clean the area around the dipstick (Fig. 17).
3. Remove the dipstick from the crankcase (Fig. 17).
4. Wipe the dipstick clean with a clean cloth.
5. Fully install the dipstick.

Note: To ensure an accurate oil level reading, you must fully install the dipstick.

6. Remove the dipstick from the crankcase (Fig. 17).
7. Read the oil level on the dipstick.
8. If the oil level is below the Full mark, slowly add oil, checking the level frequently, until the dipstick reads full.

   Use only a high–quality, SAE 5W–30 or SAE 10 weight, detergent oil, having the American Petroleum Institute (API) “service classification”—SE, SF or SG.

IMPORTANT: Do not overfill the crankcase and run the engine; engine damage will result. Drain the excess oil until the oil level on the dipstick reads Full.

9. Install the dipstick.

Changing the Engine Oil

Initially, change the oil after the first two hours of engine operation; thereafter, under normal conditions, change the oil as given in the *Recommended Maintenance Schedule* on page 18. If possible, run the engine just before changing the oil because warm oil flows better and carries more contaminants.

1. Pull the wire off of the spark plug and ensure that the wire does not contact the spark plug (Fig. 23).
2. Clean the area around the oil drain plug (Fig. 25).
3. Slide an oil drain pan under the drain extension and remove the oil drain plug (Fig. 25).

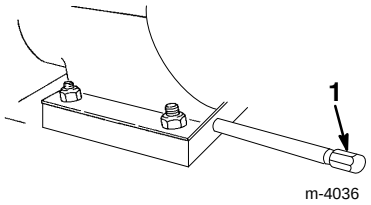

Figure 25

1. Drain plug

4. After draining the oil, install the oil drain plug.
5. Fill the crankcase with oil. Refer to *Filling the Engine with Oil* on page 12.
6. Wipe up any spilled oil.

Checking the Auger Gear Box Oil

Check the auger gear box oil level after assembling the snowthrower, and as given in the *Recommended Maintenance Schedule* on page 18.

1. Position the snowthrower on a level surface.
2. Pull the wire off of the spark plug and ensure that the wire does not contact the spark plug (Fig. 23).
3. Clean the area around the pipe plug to remove any dirt.
4. Remove the pipe plug from the gear box (Fig. 15).
5. Check the oil level in the gear box. The oil must be at the point of overflowing in the filler opening.
6. If the oil level is low, add *GL–5* or *GL–6 SAE 85–95 EP* transmission oil to the gear box until the point of overflow.

Note: Do not use synthetic gear oil.

7. Install the pipe plug in the gear box.

Adjusting the Traction Drive

If the speed selector shifts properly but the snowthrower does not drive in the reverse or the forward speeds, adjust the traction drive.

1. Pull the wire off of the spark plug and ensure that the wire does not contact the plug (Fig. 23).
2. Check the adjustment following steps 4 and 5 of *Installing the Traction Rod* on page 9. Make any needed adjustments.
3. If the linkage is properly adjusted and the problem persists, contact your local Authorized Service Dealer.

Replacing the Traction Drive Belt

When the traction belt (Fig. 28) becomes worn, oil–soaked, or otherwise damaged, replace the belt. You can purchase a new belt from your Authorized Service Dealer.

1. Pull the wire off of the spark plug and ensure that the wire does not contact the plug (Fig. 23).
2. Remove the three screws that hold the belt cover in place and set the cover aside (Fig. 26).
3. Loosen the auger brake arm assembly by loosening the rear screw and removing the front screw (Fig. 27).
4. Remove the idler pulley spring (Fig. 27). Let the brake arm assembly hang free but out of the way.
5. Remove two screws, two washers, and two lock washers that secure the belt guide (Fig. 28).
6. Remove the engine crankshaft screw, lock washer, and washer (Fig. 28).
7. Separate and remove the engine pulley sheave (Fig. 28).
8. Remove the auger/impeller drive belt from the center engine pulley, leaving the belt looped around the large auger/impeller pulley.
9. Remove the center engine pulley (Fig. 28).
10. Remove the traction belt from the traction pulley and the engine crankshaft (Fig. 28).
11. Pull the traction idler pulley outward and install a new traction belt (Fig. 28).
12. Install the center engine pulley. Make sure to not pinch the traction belt.
13. Pull the idler pulley outward and loop the auger/impeller drive belt in front of the center engine pulley, making sure that the belt is on the inside of the idler pulley and the belt guide (Fig. 28).
14. Install the engine pulley sheave, washer, lock washer, and crankshaft screw. Make sure that the indexing rib in the engine pulley sheave aligns with the indexing notch in the center engine pulley. Also, make sure to not pinch the traction belt (Fig. 29).
15. Ensure that the brake pad is properly installed on the brake arm. The angled cut-off on brake pad must be positioned as shown in Figure 30.
16. Install the two screws that secure the auger brake arm assembly. Ensure that the tabs fit into the holes in the left side of the snowthrower (Fig. 31).
17. Have someone squeeze the auger/impeller control lever (Fig. 18) against the handgrip, and install the belt guide using two screws, two washers, and two lock washers.
18. Check and adjust the belt guide, making sure that it does not contact any part of the engine pulley.
19. Check and adjust auger the drive linkage. Refer to steps 5 through 7 of *Installing the Auger/Impeller Drive Control Linkage* on page 9.
20. Install the idler pulley spring.
21. Install the belt cover with three screws.
22. Ensure that the auger and the impeller do not rotate while the auger/impeller control lever is in the Disengaged position. Stand in the operating position and look around to the side of the auger housing (Fig. 24). A large screw head on the side of the auger housing will rotate whenever the auger and impeller rotate (Fig. 24). **If the auger and impeller rotate while the engine runs and the auger/impeller control lever is disengaged, stop the snowthrower immediately.** Refer to *Adjusting the Auger/Impeller Drive Belt* on page 21. If the problem persists, bring the snowthrower to an Authorized Service Dealer for service.

IMPORTANT: Do not operate the snowthrower if the auger and the impeller rotate when auger/impeller control lever is disengaged.

Adjusting the Auger/Impeller Drive Belt

An auger/impeller drive belt that slips results in decreased snowthrowing performance and requires either an adjustment or a new belt.

DANGER

POTENTIAL HAZARD
- **Improper adjustment may cause injury if the auger/impeller turns when disengaged.**

WHAT CAN HAPPEN
- **The rotating impeller or auger can cut off or injure fingers or hands.**

HOW TO AVOID THE HAZARD
- **Keep your face, hands, feet, and any other part of your body or clothing away from concealed, moving, or rotating parts.**
- **Ensure that the impeller brake arm clearance is maintained.**
- **Do not adjust the auger/impeller drive belt too tight because it may cause the auger/impeller to turn when the control lever is in the disengaged position. If this occurs, decrease belt tension.**

After five to ten hours of snowthrower operation with a new auger/impeller drive belt, check the belt for proper tension.

1. Pull the wire off of the spark plug and ensure that the wire does not contact the plug.
2. Check the adjustment per steps 5 through 7 of Installing the *Auger/Impeller Drive Control Linkage* on page 9. Make any needed adjustments.
3. Check the belt tension by operating the auger.
4. If belt still slips, replace the belt.
5. **If the auger and the impeller rotate while the engine runs and the auger/impeller control lever is disengaged, immediately stop the engine** and bring the snowthrower to an Authorized Service Dealer for service.

IMPORTANT: Do not operate the snowthrower if the auger and the impeller rotate when the auger/impeller control lever is disengaged.

Replacing the Auger/Impeller Drive Belt

When the auger/impeller drive belt (Fig. 28) becomes worn, oil–soaked, or otherwise damaged, replace the belt.

After five to ten hours of snowthrower operation with a new auger/impeller drive belt, check the belt to ensure the proper belt tension.

1. Pull the wire off of the spark plug and ensure that it does not contact the plug (Fig. 23).
2. Remove the three screws that hold the belt cover in place and set the cover aside (Fig. 26).

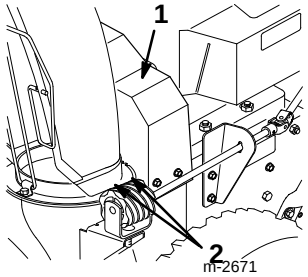

Figure 26

1. Upper belt cover
2. Screws

3. Loosen the auger brake arm assembly by loosening a rear screw and removing the front screw that fasten the auger brake arm assembly to the frame (Fig. 27).

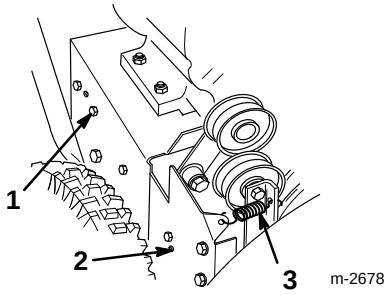

Figure 27

1. Rear screw
2. Front screw
3. Idler pulley spring

4. Remove the idler pulley spring (Fig. 27). Let the brake arm assembly hang free but out of the way.

5. Remove two screws, two washers, and two lock washers that secure the belt guide (Fig. 28).

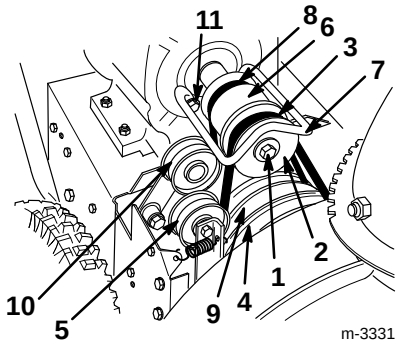

Figure 28

1. Engine crankshaft screw, lock washer, and washer
2. Engine pulley sheave
3. Auger/impeller drive belt
4. Large auger/impeller pulley
5. Idler pulley
6. Center engine pulley
7. Belt guide
8. Traction belt
9. Traction pulley
10. Traction idler pulley
11. Screw, washer, and lock washer

---

6. Remove the engine crankshaft screw, lock washer, and washer (Fig. 28).

7. Separate and remove the engine pulley sheave (Fig. 28).

8. Remove the auger/impeller drive belt from the center engine pulley and the large auger/impeller pulley (Fig. 28).

9. Pull the idler pulley outward and install a new belt around the large auger/impeller pulley (Fig. 28).

10. Loop the belt in front of the center engine pulley, making sure that the belt is on the inside of the idler pulley and the belt guide (Fig. 28).

11. Install the engine pulley sheave, the washer, the lock washer, and the engine crankshaft screw.

Make sure that the indexing rib in the engine pulley sheave aligns with the indexing notch in the center engine pulley. Also, make sure not to pinch the drive belt (Fig. 29).

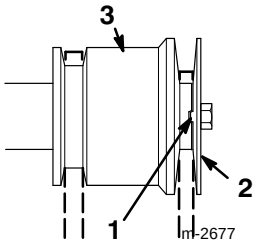

Figure 29

1. Indexing rib in indexing notch
2. Engine pulley sheave
3. Center engine pulley

---

12. Make sure that the brake pad is properly installed on brake arm. The angled cut-off on brake pad must be positioned as shown in Figure 30.

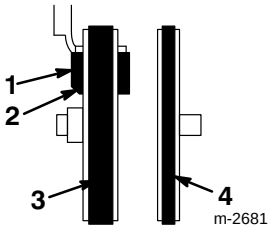

Figure 30

1. Brake pad
2. Angled cut-off
3. Auger/impeller drive belt
4. Traction drive belt

---

13. Install the two screws that secure the auger brake arm assembly. Make sure that the tabs fit into the holes in the left side of the snowthrower (Fig. 31).

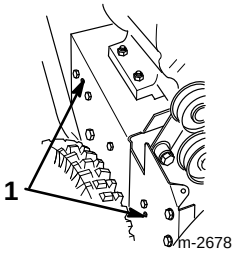

Figure 31

1. Tabs in holes

---

14. Have someone squeeze the auger/impeller control lever (Fig. 18) against the handgrip and reinstall the belt guide using two screws, two washers, and two lock washers.

15. Check and adjust the belt guide, ensuring that it does not contact any part of the engine pulley.

16. Check and adjust auger the drive linkage. Refer to steps 5 through 7 of *Installing the Auger/Impeller Drive Control Linkage* on page 9.

17. Install the idler pulley spring.

18. Install the belt cover with the three screws.

19. Ensure that the auger and the impeller do not rotate while auger/impeller control lever is in the Disengaged position. Stand in the operating position and look around to the side of the auger housing (Fig. 24). A large screw head on the side of the auger housing will rotate whenever the auger and impeller rotate (Fig. 24). **If the auger and impeller rotate while the engine runs and the auger/impeller control lever is disengaged, stop the snowthrower immediately.** Refer to *Adjusting the Auger/Impeller Drive Belt* on page 21. If the problem persists, bring the snowthrower to an Authorized Service Dealer for service.

IMPORTANT: Do not operate the snowthrower if the auger and the impeller rotate when auger/impeller control lever is disengaged.

Adjusting the Scraper and Skids

Adjust the scraper to compensate for wear and to ensure that the auger does not contact the pavement.

1. Pull the wire off of the spark plug and ensure that the wire does not contact the spark plug (Fig. 23).

2. Check the tire pressure in the tires. Refer to *Checking the Tire Pressure* on page 11.

3. Move the snowthrower to a level surface.

4. Loosen the four flange bolts that secure both skids to the auger side plates (Fig. 16) until the skids slide up and down easily.

5. Loosen the carriage screws that secure the scraper to the auger housing (Fig. 32).

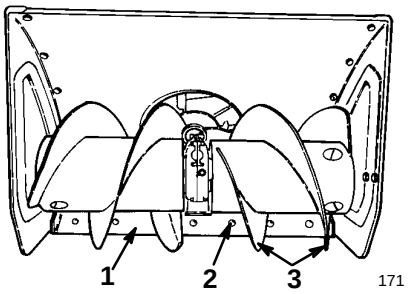

Figure 32

1. Scraper
2. Carriage screw
3. Auger blades

6. Support the **auger blades** (Fig. 32) so that they are at least 1/8 to 1/4 in. (3 to 6 mm) off the ground.

7. Move the scraper so that it contacts the flat surface all the way across and then tighten the two rear flanged bolts that secure the scraper and skids to the side plates.

This temporarily locks the scraper in the proper position so that you can tighten the remaining fasteners without affecting the adjustment.

8. Secure the scraper using carriage screws and nylon locknuts.

For Concrete and Asphalt Surfaces

If the snowthrower does not clean up the snow close enough to the pavement, adjust the skids to lower the scraper; if the scraper catches on cracks in the pavement, adjust the skids to raise the scraper.

1. Support the scraper 1/8 in. (3 mm) above the pavement.

Note: The scraper should be higher than 1/8 in. (3 mm) above the pavement if the pavement surfaces are cracked, rough, or uneven.

2. Move the skids down to sit flat on the ground.

3. Tighten the four flange bolts that secure the skids to the auger side plates (Fig. 16).

For Gravel Surfaces

For gravel or crushed rock surfaces, adjust the skids to prevent picking up rocks.

1. Support the auger blades a few inches (centimerters) above the ground.

2. Slide the skids down as far as possible.

3. Tighten the four flange bolts that secure the skids to the auger side plates (Fig. 16).

Adjusting the Speed Selector

If the snowthrower is slow, the No.1 speed selection has no speed, or the speed selector does not move into the No. 5 speed selection, adjust the speed selector linkage.

1. Pull the wire off of the spark plug and make sure that the wire does not contact the spark plug (Fig. 23).

2. Move the speed selector (Fig. 18) on control panel to the R_2 (Reverse) position.

3. Remove the cotter pin and the washer. Pull the speed selector rod out of the hole in the speed selector arm (Fig. 6).

4. Adjust the forward speed by rotating the speed selector rod in the trunnion (Fig. 7).

Lengthening the rod makes forward speed faster. Shortening the rod makes forward speed slower.

5. Insert the speed selector rod into the speed selector arm and secure it with a washer and a cotter pin.

Lubricating the Snowthrower

Lightly lubricate all moving parts of the snowthrower according to the *Recommended Maintenance Schedule* on page 18.

1. Pull the wire off of the spark plug and ensure that it does not contact the spark plug (Fig. 23).
2. Drain the gasoline from the fuel tank; refer to *Emptying the Fuel Tank* on page 25.
3. Tip the snowthrower forward onto its auger housing and block it so that it cannot fall.
4. Remove eight screws holding the back and the bottom covers in place and remove the covers (Fig. 33).

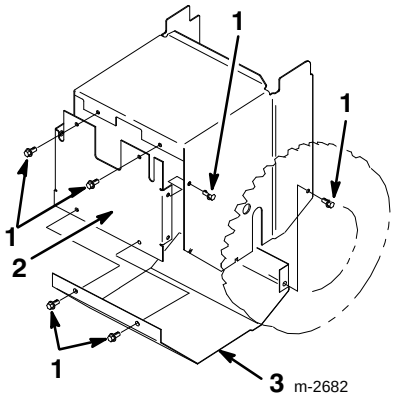

Figure 33

1. Screws
2. Back cover
3. Bottom cover

5. Lightly lubricate the snowthrower with light oil as shown in Figures 34 and 35.

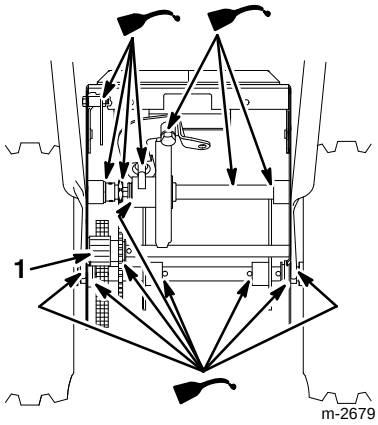

Figure 34

1. Axle gear

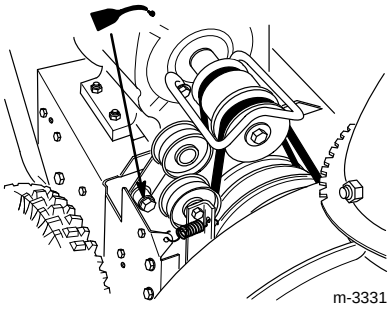

Figure 35

IMPORTANT: Do not get oil or grease on the rubber wheel or the friction drive plate. This can cause the wheel to slip and the rubber to deteriorate.

6. Wipe up any excess oil.
7. Lightly grease the axle gear (Fig. 34).
8. Wipe up any excess grease.
9. Install the back and bottom covers.

Replacing the Spark Plug

Use a Champion RJ–19LM spark plug or equivalent. Since the air gap between center and side electrodes of the spark plug increases gradually during normal engine operation, install a new plug after every 25 hours of engine operation.

1. Clean the area around the spark plug so that foreign matter does not fall into cylinder when removing the spark plug.
2. Pull the wire off of the spark plug (Fig. 23) and remove the plug from the cylinder head.

IMPORTANT: Replace a cracked, fouled, or dirty spark plug. Do not sandblast, scrape, or clean electrodes because grit may eventually release from the plug and fall into the cylinder and cause engine damage.

3. Set the air gap between electrodes of the spark plug at 0.030 in. (0.76 mm) (Fig. 36).

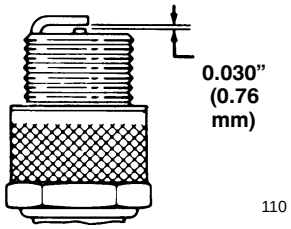

Figure 36

4. Install the spark plug in the cylinder head.
5. Torque the spark plug to 15 ft–lb (20.4 N·m).

6. Push the wire onto the spark plug.

Emptying the Fuel Tank

1. Pull the wire off of the spark plug to ensure that the wire does not contact the spark plug (Fig. 23).
2. Close the fuel shut–off valve (Fig. 20).

DANGER

POTENTIAL HAZARD
- **Gasoline is highly flammable.**

WHAT CAN HAPPEN
- **Gasoline can be ignited and cause serious personal injury.**

HOW TO AVOID THE HAZARD
- **Drain gasoline outdoors.**
- **Drain gasoline from a cold engine only.**
- **Wipe up any gasoline that may have spilled.**
- **Do not drain gasoline near any open flame or where gasoline fumes may be ignited by a spark.**
- **DO NOT SMOKE a cigar, cigarette or pipe when handling gasoline.**

3. Place a clean drain pan under the fuel shut–off valve.
4. Loosen the hose clamp that secures the fuel line to the valve and slide the line off of the valve (Fig. 20).
5. Open the valve by rotating it to the right. This allows the fuel to flow into the drain pan.
6. Install the fuel line and secure it with a hose clamp.
7. Install the spark plug wire and restart the snowthrower.
8. Run the engine until it stops.

Storage

Preparing the Fuel System

1. Add stabilizer/conditioner to the fuel tank as directed.
2. Run the engine for ten minutes to distribute conditioned fuel through the fuel system.
3. Stop the engine, allow it to cool, and drain the fuel tank or run the engine until it stops.
4. Start the engine and run it until it stops.
5. Choke or prime the engine, start it a third time, and run the engine until it will not restart.
6. Dispose of fuel properly. Recycle according to local codes.

Note: Do not store stabilized gasoline over 90 days.

Preparing the Engine

7. Remove the spark plug from the cylinder head.
8. Pour two teaspoons of oil into the spark plug hole.
9. Install the spark plug, but do not install the wire on the plug.
10. Pull the recoil starter slowly to distribute oil on inside of the cylinder.
11. Change the engine oil. Refer to *Changing the Engine Oil* on page 19.

Preparing the Snowthrower

12. Lubricate the snowthrower. Refer to *Lubricating the Snowthrower* on page 24.
13. Clean the snowthrower.
14. Touch up chipped surfaces with paint. Paint is available from an Authorized Service Dealer. Sand affected areas before painting, and use a rust preventative to prevent the metal parts from rusting.
15. Tighten all screws and nuts. Repair or replace any damaged parts.
16. Cover the snowthrower and store it in a clean, dry place out of the reach of children. Allow the engine to cool before storing it in any enclosure.

Accessories

You can obtain the following accessories from your Authorized Service Dealer:

- Tire Chain Kit
- Drift Breaker Kit
- Cab Kit
- Light Kit

Gas Powered
Snow
Products

The Toro Total Coverage Guarantee

A Full Two-Year Warranty
(Limited Warranty for Commercial Use)

What Is Covered By This Express Warranty?

The Toro Company promises to repair any Toro Product used for normal residential purposes* if defective in materials or workmanship for a period of two years from the date of purchase. For single stage snowthrowers, the cost of parts and labor is included, but the customer pays the transportation costs.

Transportation within a 15 mile radius of the servicing dealer is covered under this warranty for two-stage snowthrowers.

What Products Are Covered By This Warranty?

This warranty applies to all gasoline powered snow products.

How About Commercial Use?

Toro Consumer Products used for commercial, institutional or rental use are covered by a limited warranty for 45 days from the date of purchase.

How Do You Get Warranty Service?

Should you feel your Toro Product contains a defect in material or workmanship, contact the dealer who sold you the product or any Authorized Toro Service Dealer or Toro Master Service Dealer. The Yellow Pages of your telephone directory is a good reference source. The dealer will either arrange service at his/her dealership or recommend another Authorized Service Dealer who may be more convenient. You may need proof of purchase (copy of registration card, sales receipt, etc.) for warranty validation.

If for any reason you are dissatisfied with the Service Dealer's analysis of the defect in materials or workmanship or if you need a referral to a Toro Service Dealer, please feel free to contact us at the following address:

Toro Customer Service Department
8111 Lyndale Avenue South
Bloomington, MN 55420–1196
612–888–8801
800–348–2424

What Must You Do To Keep The Warranty In Effect?

You must maintain your Toro Product by following the maintenance procedures described in the operator's manual. Such routine maintenance, whether performed by a dealer or by you, is at your expense.

What Does This Warranty Not Cover? and How Does Your State Law Relate To This Warranty?

There is no other express warranty except for special emission system coverage on some products and the Toro Starting Guarantee on GTS Engines. This express warranty does not cover:

- Cost of regular maintenance service or parts, such as filters, fuel, lubricants, tune-up parts, blade sharpening, brake and clutch adjustments.

- Any product or part which has been altered or misused or required replacement or repair due to normal wear, accidents, or lack of proper maintenance.

- Repairs necessary due to improper fuel, contaminants in the fuel system, or failure to properly prepare the fuel system prior to any period of non-use over three months.

- Pickup and delivery charges for distances beyond a 15 mile radius from an Authorized Toro Service Dealer (covered products only).

All repairs covered by this warranty must be performed by an Authorized Toro Service Dealer using Toro approved replacement parts.

Repair by an Authorized Toro Service Dealer is your sole remedy under this warranty.

The Toro Company is not liable for indirect, incidental or consequential damages in connection with the use of the Toro Products covered by this warranty, including any cost or expense of providing substitute equipment or service during reasonable periods of malfunction or non–use pending completion of repairs under this warranty. Some states do not allow exclusions of incidental or consequential damages, so the above exclusion may not apply to you.

This warranty gives you specific legal rights, and you may also have other rights which vary from state to state.

* Normal residential purposes means removing snow on the same lot as your home. Use at more than one location is considered commercial use and the commercial use warranty would apply.

Countries Other than the United States or Canada

Customers who have purchased Toro Products exported from the United States or Canada should contact their Toro Distributor (Dealer) to obtain guarantee policies for your country, province, or state. If for any reason you are dissatisfied with your Distributor's service or have difficulty obtaining guarantee information, contact the Toro importer. If all other remedies fail, you may contact us at The Toro Company.

Rev. 5/17/1999