Form No. 3430-135 Rev A

TORO®

Count on it.

Operator's Manual

62in Side Discharge Mower

Groundsmaster® 200,1000, 3320 and 3280-D Series Traction Unit

Model No. 30551—Serial No. 400000000 and Up

Register at www.Toro.com.
Original Instructions (EN)

CE

3430-135 A

This product complies with all relevant European directives. For details, please see the Declaration of Incorporation (DOI) at the back of this publication.

⚠ WARNING

CALIFORNIA
Proposition 65 Warning

Use of this product may cause exposure to chemicals known to the State of California to cause cancer, birth defects, or other reproductive harm.

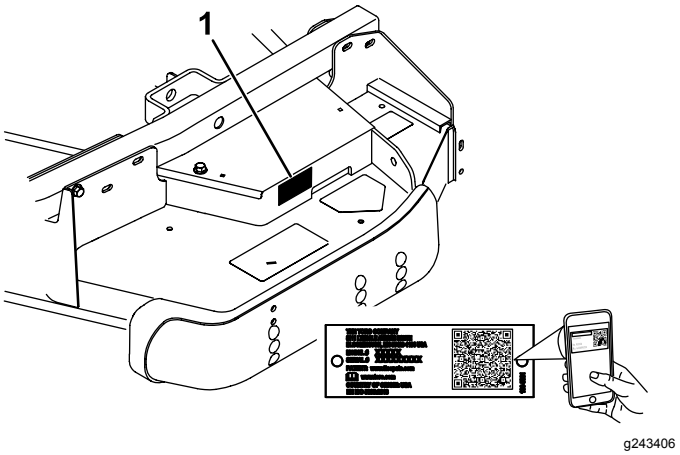

g243406

Figure 1

1. Serial number location

Introduction

This rotary-blade lawn cutting deck is mounted to a ride-on machine and is intended to be used by professional, hired operators in commercial applications. It is primarily designed for cutting grass on well-maintained lawns in parks, sports fields, and on commercial grounds. Using this product for purposes other than its intended use could prove dangerous to you and bystanders.

Read this information carefully to learn how to operate and maintain your product properly and to avoid injury and product damage. You are responsible for operating the product properly and safely.

Visit www.Toro.com for product safety and operation training materials, accessory information, help finding a dealer, or to register your product.

Whenever you need service, genuine Toro parts, or additional information, contact an Authorized Service Dealer or Toro Customer Service and have the model and serial numbers of your product ready.Figure 1 identifies the location of the model and serial numbers on the product. Write the numbers in the space provided.

Important: **With your mobile device, you can scan the QR code on the serial number decal (if equipped) to access warranty, parts, and other product information.**

Model No. _____

Serial No. _____

This manual identifies potential hazards and has safety messages identified by the safety-alert symbol (Figure 2), which signals a hazard that may cause serious injury or death if you do not follow the recommended precautions.



g000502

Figure 2

1. Safety-alert symbol

This manual uses 2 words to highlight information. **Important** calls attention to special mechanical information and **Note** emphasizes general information worthy of special attention.

© 2019—The Toro® Company
8111 Lyndale Avenue South
Bloomington, MN 55420

Contact us at www.Toro.com.
Printed in the USA
All Rights Reserved

Contents

Safety 4
General Safety 4
Cutting Unit Safety 4
Safety and Instructional Decals 5
Setup 8
1 Installing the Castor Wheel Assemblies 8
2 Installing the Lift Arms 9
3 Connecting the Lift Arms to the Cutting Unit 10
4 Connecting the PTO Shaft and Guard to the Cutting Unit Gearbox 11
5 Installing the Rear Weight 11
6 Greasing the Machine 11
Product Overview 12
Specifications 12
Attachments/Accessories 12
Operation 12
Adjusting the Height of Cut 12
Adjusting the Rollers and Gage Wheel 14
..... 14
Adjusting the Weight Transfer 14
Using the Grass Deflector 15
Operating Tips 15
Maintenance 17
Recommended Maintenance Schedule(s) 17
Daily Maintenance Checklist 17
Lubrication 18
Checking the Lubricant in the Gearbox 18
Separating the Cutting Unit from the Traction Unit 19
Servicing the Bushings in the Castor Arms 19
Servicing the Castor Wheels and Bearings 20
Servicing the Cutting Blades 20
Checking and Correcting Mismatch of Blades 22
Adjusting the Idler Pulley 23
Replacing the Drive Belt 23
Replacing the Grass Deflector 24
Cleaning Under the Cutting Unit 24
Storage 25
Troubleshooting 26

Safety

This machine has been designed in accordance with ANSI B71.4-2017 and EN ISO 5395.

General Safety

This product is capable of amputating hands and feet and of throwing objects. Always follow all safety instructions to avoid serious personal injury.

- Read and understand the contents of this *Operator's Manual* before starting the engine.
- Use your full attention while operating the machine. Do not engage in any activity that causes distractions; otherwise, injury or property damage may occur.
- Do not operate the machine without all guards and other safety protective devices in place and functioning properly on the machine.
- Keep your hands and feet away from rotating parts. Keep clear of the discharge opening.
- Keep bystanders and children out of the operating area. Never allow children to operate the machine.
- Shut off the engine, remove the key (if equipped), and wait for all movement to stop before you leave the operator's position, Allow the machine to cool before adjusting, servicing, cleaning, or storing it.

Improperly using or maintaining this machine can result in injury. To reduce the potential for injury, comply with these safety instructions and always pay attention to the safety-alert symbol ⚠, which means Caution, Warning, or Danger—personal safety instruction. Failure to comply with these instructions may result in personal injury or death.

Cutting Unit Safety

- The cutting unit is only a part of a complete machine when installed on a traction unit. Read the **traction unit *Operator's Manual*** carefully for complete instructions on the safe use of the machine.
- Stop the machine, remove the key, and wait for all moving parts to stop before inspecting the attachment after striking an object or if there is an abnormal vibration in the machine. Make all necessary repairs before resuming operation.
- Keep all parts in good working condition and all hardware tightened. Replace all worn or damaged decals.
- Use only accessories, attachments, and replacement parts approved by Toro.

Safety and Instructional Decals

Safety decals and instructions are easily visible to the operator and are located near any area of potential danger. Replace any decal that is damaged or missing.

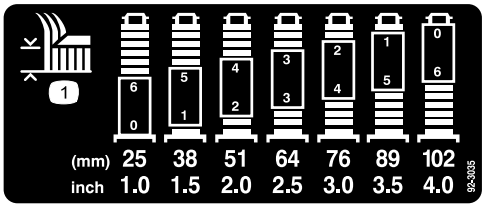

decal92-3035

92-3035

1. Height of cut



decal93-6697

93-6697

1. Read the *Operator's Manual*.
2. Check the oil every 50 hours. Add SAE 80w-90 (API GL-5) oil if needed.

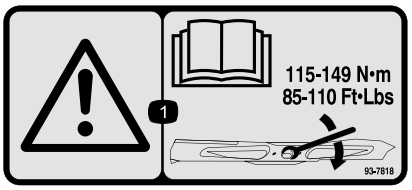

decal93-7818

93-7818

1. Warning—read the *Operator's Manual* for instructions on torquing the blade bolt/nut to 115-149 N-m (85-110 ft-lb).

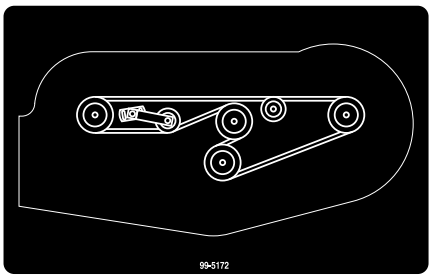

decal99-5172

99–5172

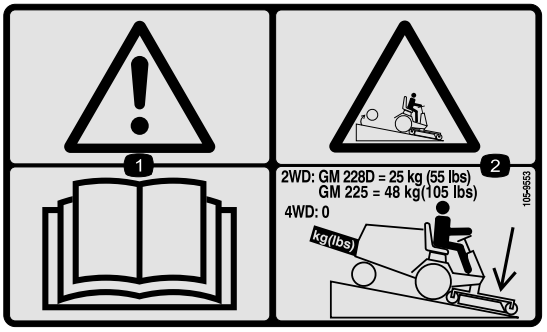

decal105-9553

105-9553

1. Warning—read the *Operator's Manual*.
2. Tipping hazard—lower the cutting unit when driving down slopes; for 2-wheel drive units, add a 25 kg (55 lb) rear weight to GM 228D units and a 48 kg (105 lb) rear weight to GM 225 units; for 4-wheel drive units, do not add weight.

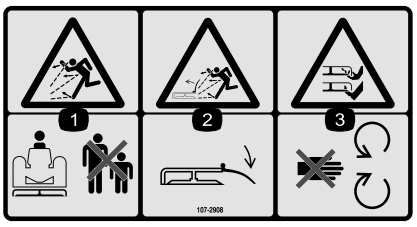

decal107-2908

107-2908

1. Thrown object hazard—keep bystanders away.
2. Thrown object hazard—lower the deflector before using the machine.
3. Cutting/dismemberment hazard of hand or foot, mower blade—stay away from moving parts.



decal107-2915

107-2915

1. Entanglement hazard, shaft—keep bystanders away.

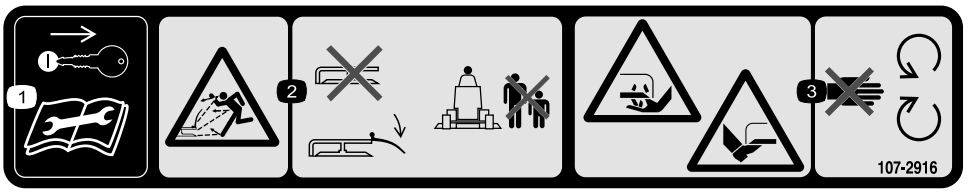

decal107-2916

107-2916

1. Remove the key and read the *Operator's Manual* before performing maintenance.
2. Thrown object hazard—do not operate the mower with the deflector up or removed; lower the deflector before using the machine; keep bystanders away.
3. Cutting/dismemberment hazard of hand or foot, mower blade—stay away from moving parts.

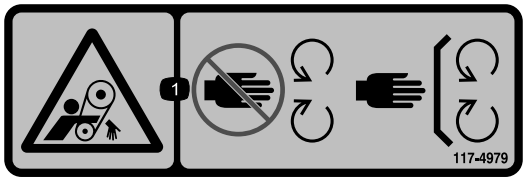

decal117-4979

117–4979

1. Entanglement hazard, belt—stay away from moving parts, keep all guards and shields in place.

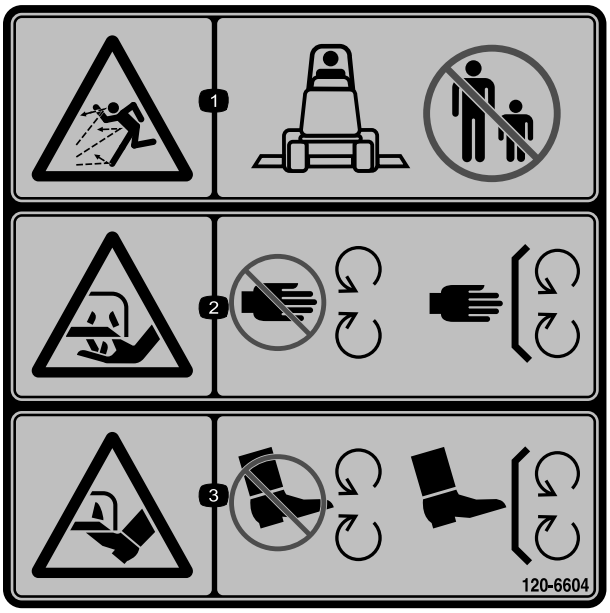

decal120-6604

120-6604

1. Thrown object hazard—keep bystanders away from the machine.
2. Cutting/dismemberment hazard of hand, mower blade—stay away from moving parts, keep all guards and shields in place.
3. Cutting/dismemberment hazard of foot, mower blade—stay away from moving parts, keep all guards and shields in place.



decal133-8061

133-8061

Setup

Loose Parts

Use the chart below to verify that all parts have been shipped.

Procedure	Description	Qty.	Use
1	Front castor wheel assembly Rear castor wheel assembly	2 2	Install the castor wheel assemblies.
2	Right lift arm Left lift arm Pivot pin Cotter pin (5/32 x 1-3/4 inches)	1 1 2 2	Install the lift arms.
3	No parts required	–	Connect the lift arms to the cutting unit.
4	No parts required	–	Connect the PTO shaft and guard to the cutting unit gearbox.
5	No parts required	–	Install the rear weight.
6	No parts required	–	Grease the machine.

Media and Additional Parts

Description	Qty.	Use
Operator's Manual	1	Review the material and save in an appropriate place
Parts Catalog	1	Use to reference part numbers

⚠ WARNING

If you leave the key in the ignition switch, someone could accidentally start the engine and seriously injure you or other bystanders.

Remove the key from the ignition switch before you do any maintenance.

⚠ DANGER

If the engine is started and the PTO shaft is allowed to rotate, serious injury could result.

Do not start the engine and engage the PTO lever when the PTO shaft is not connected to the gearbox on the cutting unit.

Note: Determine the left and right sides of the machine from the normal operating position.

Note: When installing the 62-inch deck onto a Groundsmaster 200 Series traction unit, you must install the Weight Transfer Kit, Toro Part No. 70-8100.

1

Installing the Castor Wheel Assemblies

Parts needed for this procedure:

2	Front castor wheel assembly
2	Rear castor wheel assembly

Procedure

Note: The thrust washers, spacers, and tensioning caps have been installed on the castor wheel spindles for shipping.

1. Remove the tensioning caps from the spindle shafts and slide off the spacers and thrust washers (Figure 3 and Figure 4).

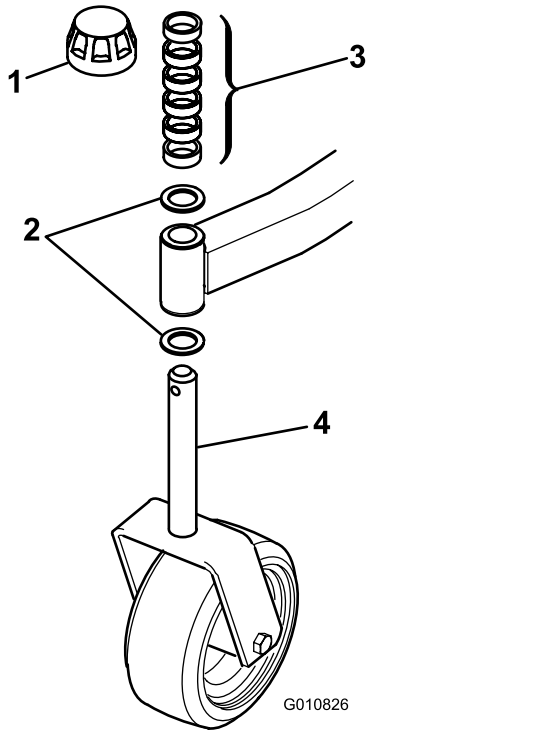

g010826

Figure 3
Front Castor Wheel Assembly

1. Tensioning cap
2. Thrust washers
3. Spacers
4. Front castor spindle

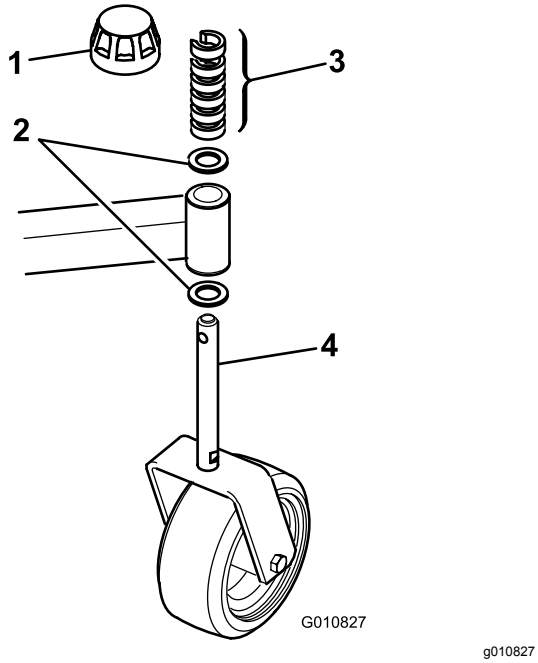

g010827

Figure 4
Rear Castor Wheel Assembly

1. Tensioning cap
2. Thrust washers
3. Spacers
4. Rear castor spindle

2. Slide the spacers onto the castor spindle to get the desired height of cut; refer to the chart in Adjusting the Height of Cut (page 12).
3. Slide a thrust washer onto the spindle, push the round castor spindle through the front castor arm, and the hex castor spindle through the rear castor arm.
4. Install another thrust washer and the remaining spacers onto the spindle and install the tensioning cap to secure the assembly.

   Important: **The thrust washers, not the spacers, must contact the top and bottom of the castor arm.**
5. Ensure that all 4 castor wheels are set at the same height of cut and roll the cutting unit off the pallet.

2

Installing the Lift Arms

Parts needed for this procedure:

1	Right lift arm
1	Left lift arm
2	Pivot pin
2	Cotter pin (5/32 x 1-3/4 inches)

Procedure

1. On one side of the traction unit, loosen (do not remove) the wheel nuts that secure the wheel and tire assembly to the front wheel studs.
2. Jack up the machine until the front wheel is off the floor. Use jack stands to prevent it from accidentally falling.
3. Remove the wheel nuts and slide the wheel and tire assembly off the studs.
4. Mount a lift arm (with the ball joint end positioned outward) to the pivot bracket with a pivot pin and a cotter pin (5/32 x 1-3/4 inches) (Figure 5).

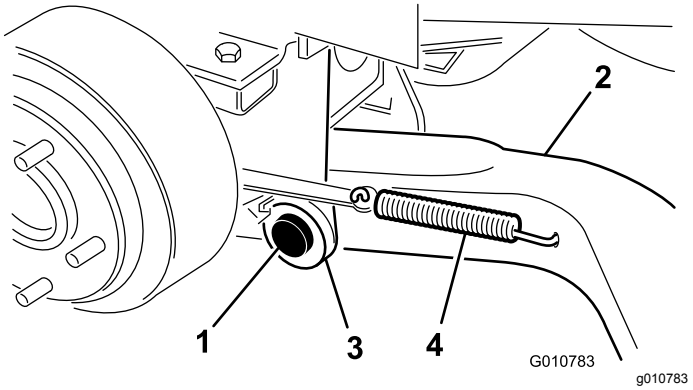

Figure 5

1. Pivot pin
2. Lift arm
3. Lift arm pivot bracket
4. Brake return spring

5. Mount the rear of the lift arm to the lift cylinder with a pivot pin and 2 cotter pins (supplied with the traction unit).
6. Hook the brake return spring into the hole in the lift arm (Figure 5).
7. Repeat this procedure for the opposite side of the machine.

3

Connecting the Lift Arms to the Cutting Unit

No Parts Required

Procedure

1. Move the cutting unit into position in front of the traction unit.
2. Measure the distance from the end of each lift arm to the center of the ball joint (grease fitting). The distance should be 57 mm (2-1/4 inches) (Figure 6).

   Note: If the distance is not 57 mm (2-1/4 inches), loosen the jam nut that secures the ball joint to the lift arm and rotate the ball joint in or out until you attain the distance. Do not tighten the jam nuts at this time.

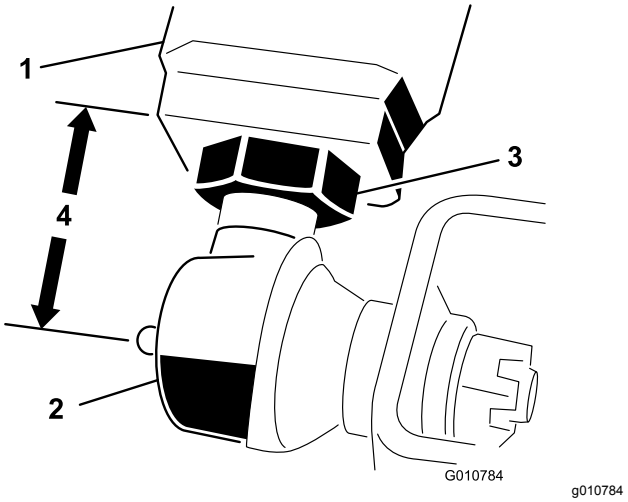

Figure 6

1. Lift arm
2. Ball joint
3. Jam nut
4. 57 mm (2–1/4 inch)

3. Move the lift lever to the FLOAT position. Push the lift arms down until the holes in the ball joint mounts lineup with the holes in the castor arms.

   Note: For the Groundsmaster 3280–D and 3320, the engine must be running to lower the lift arms.
4. Secure the ball joint mounts to each castor arm with 2 capscrews (7/16 x 3 inches) and flange nuts (7/16 inches) (Figure 7).

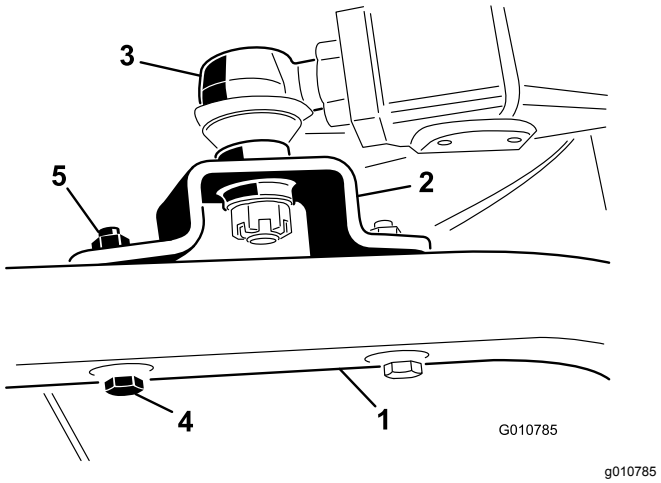

Figure 7

1. Castor arm
2. Ball joint mount
3. Ball joint
4. Capscrew (7/16 x 3 inches)
5. Flange nut (7/16 inches)

   Note: The ball joint mount should be above the castor arm when you assemble it.
5. Tighten the large jam nut that secures the ball joint to the lift arm (Figure 7).

Note: When tightening the jam nut, hold the ball joint straight to permit proper oscillation during raising and lowering of the cutting unit.

4

Connecting the PTO Shaft and Guard to the Cutting Unit Gearbox

No Parts Required

Procedure

1. Remove the 2 capscrews and lock washers that secure the PTO guard mounting brackets to the gearbox (Figure 8).

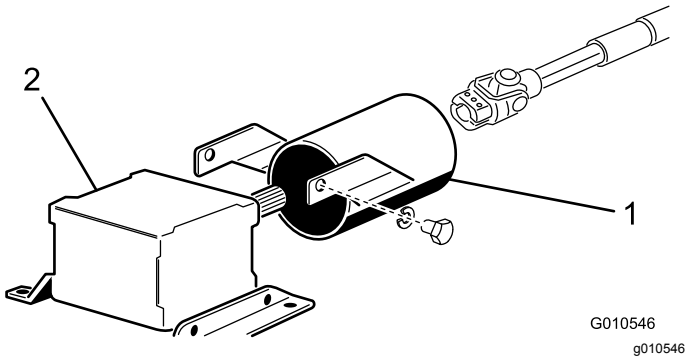

Figure 8

1. PTO guard
2. Gearbox

Note: Retain the fasteners for future installation.

2. Slide the PTO shaft guard onto the PTO shaft, positioning the guard as shown in Figure 8.
3. Slide the male PTO shaft into the female PTO shaft.

   Note: Align the mounting holes in the gear case input shaft with the holes in the PTO shaft and slide them together.
4. Secure them with a roll pin.
5. Tighten the capscrews and nuts.
6. Attach the PTO shaft guard to the gearbox with the 2 capscrews and lock washers previously removed.

5

Installing the Rear Weight

No Parts Required

Procedure

Two-Wheel Drive Groundsmaster 1000 and 200 Series traction units comply with EN ISO 5395 and ANSI B71.4-2017 when equipped with rear weight. Refer to the chart in the traction unit *Operator's Manual* to determine the combinations of weight required. Order the parts from your local authorized Toro distributor.

Four-Wheel Drive Groundsmaster 200 Series traction units do not need additional rear weight to comply with EN ISO 5395 and ANSI B71.4-2017.

Two-Wheel Drive Groundsmaster 3280-D and Groundsmaster 3320 traction units with serial numbers 250000101 through 259999999 comply with EN ISO 5395 and ANSI B71.4-2017 when equipped with the rear weight kit, Part No. 24-5780.

Two-Wheel Drive Groundsmaster 3280-D and Groundsmaster 3320 traction units with serial numbers 260000101 and up do not need additional rear weight to comply with EN ISO 5395 and ANSI B71.4-2017.

Four-Wheel Drive Groundsmaster 3280-D traction units do not need additional rear weight to comply with EN ISO 5395 and ANSI B71.4-2017.

6

Greasing the Machine

No Parts Required

Procedure

Before operating the machine, grease it to ensure proper lubricating characteristics; refer to Lubrication (page 18). Failure to properly grease the machine will result in premature failure of critical parts.

Product Overview

Specifications

Note: Specifications and design are subject to change without notice.

Width of Cut	1.56 m (61-5/8 inches)
Height of Cut	Adjustable from 25 to 102 mm (1 to 4 inches) in 13 mm (1/2 inch) increments
Blade Tip Speed	15,480 ft/minute @ 3250 engine rpm
Cutting Blades	3 heat-treated steel blades, each 4.8 mm (3/16 inch) thick and 55 cm (24-3/4 inches) long
Castor Wheels	203 mm (8 inch) diameter greaseable roller bearings (inflated to 241-345 kPa [35-50 psi])
Drive System	PTO driven gearbox transmits power through a "AA" section belt to all blade spindles.
Net Weight	244 kg (539 lb)

Attachments/Accessories

A selection of Toro approved attachments and accessories is available for use with the machine to enhance and expand its capabilities. Contact your Authorized Service Dealer or authorized Toro distributor or go to www.Toro.com for a list of all approved attachments and accessories.

To ensure optimum performance and continued safety certification of the machine, use only genuine Toro replacement parts and accessories. Replacement parts and accessories made by other manufacturers could be dangerous, and such use could void the product warranty.

Operation

Note: Determine the left and right sides of the machine from the normal operating position.

Adjusting the Height of Cut

The height of cut is adjustable from 25 to 102 mm (1 to 4 inches) in 13 mm (1/2 inch) increments, by adding or removing an equal number of spacers on the front and rear castor forks. The height-of-cut chart below gives the combinations of spacers to use for all height-of-cut settings.

Height-of-Cut Setting	**Spacers Below Castor Arm**	
	Front	**Rear**
25 mm (1 inch)	0	0
38 mm (1-1/2 inches)	1	1
51 mm (2 inches)	2	2
64 mm (2-1/2 inches)	3	3
76 mm (3 inches)	4	4
89 mm (3-1/2 inches)	5	5
102 mm (4 inches)	6	6

1. Start the engine and raise the cutting unit so that the height of cut can be changed.
2. Stop the engine after raising the cutting unit.

Adjusting the Front Castor Wheels

1. Remove the tensioning cap from the spindle shaft and slide the spindle out of the front castor arm (Figure 9).

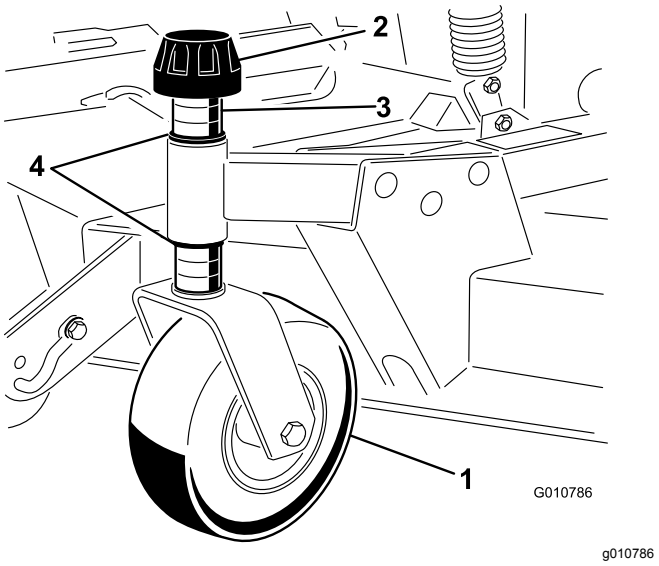

Figure 9

1. Front castor wheel
2. Tensioning cap
3. Spacers
4. Thrust washers

2. Remove the washer from the spindle shaft.
3. Slide the spacers onto the spindle shaft to get the desired height of cut, then slide the washer onto the shaft.
4. Push the castor spindle through the front castor arm.
5. Install the other thrust washer and remaining spacers onto the spindle.
6. Install the tensioning cap to secure the assembly.

Adjusting the Rear Castor Wheels

1. Remove the tensioning cap securing the gage wheel to the cutting unit brackets (Figure 10).

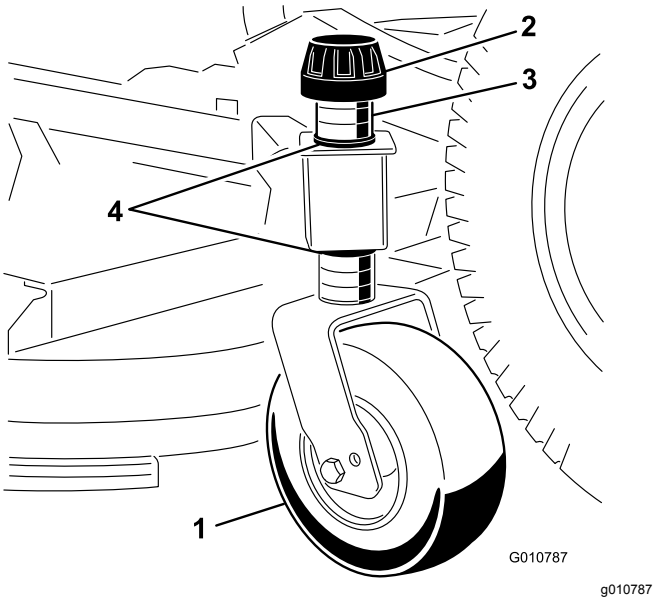

Figure 10

1. Rear castor wheel
2. Tensioning cap
3. Spacers
4. Thrust washers

2. Remove or add ”C” shaped spacers at the narrow portion of the spindle shaft, below the castor arm, to get the desired height of cut.

   Note: Ensure that the thrust washers, not the spacers, contact the top and bottom of the castor arm.
3. Install the tensioning cap to secure the assembly.

   Note: Ensure that all 4 castor wheels are set at the same height of cut.

Adjusting the Rollers and Gage Wheel

Note: If you want to use the cutting unit in the 25 mm (1 inch) or 38 mm (1-1/2 inches) height-of-cut setting, position the cutting unit rollers in the top bracket holes.

Adjusting the Front Roller

1. Remove the capscrew and nut securing the roller shaft to the cutting unit bracket (Figure 11).

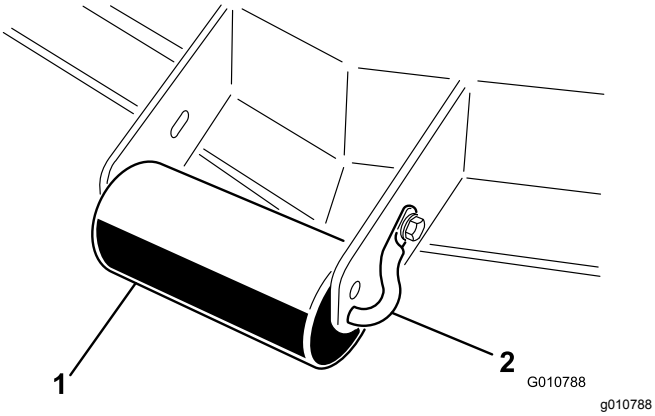

Figure 11

1. External roller
2. Roller shaft

2. Slide the shaft out of the lower bracket holes, align the roller with the top holes, and install the shaft.
3. Secure the roller shaft to the cutting unit bracket with the capscrew and nut.

Adjusting the Front Gage Wheel

1. Remove the capscrew and nut securing the gage wheel to the cutting unit brackets (Figure 12).

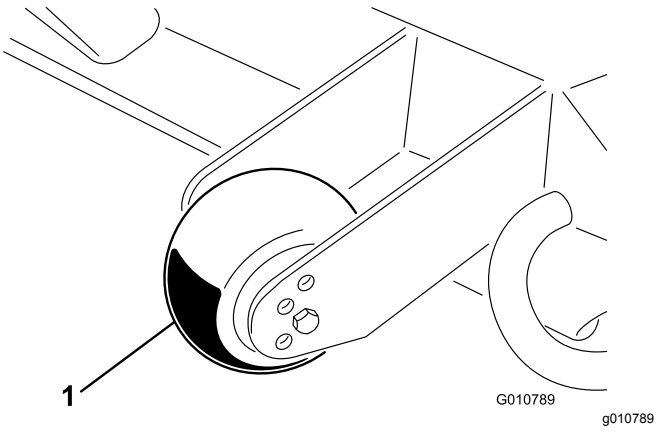

Figure 12

1. Gage wheel

2. Align the roller and spacer with the top holes in the brackets and secure them with the capscrew and nut.

Adjusting the Rear (Internal) Rollers

1. Remove the cotter pins securing the roller shafts to the brackets on the underside of the deck (Figure 13).

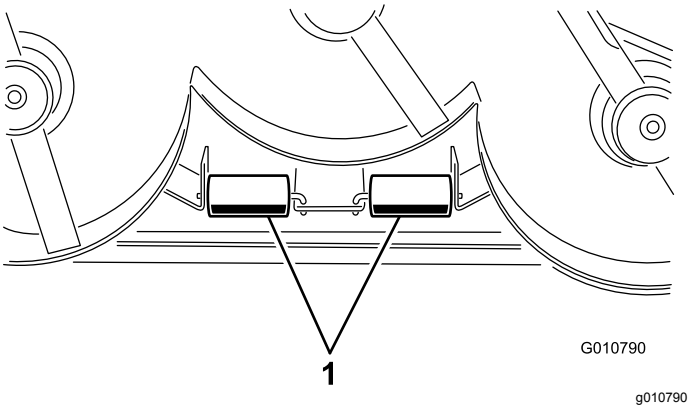

Figure 13

1. Internal rollers

2. Slide the shafts out of the lower bracket holes, align the rollers with the top holes, and install the shafts.
3. Install the cotter pins to secure the assemblies.

Adjusting the Weight Transfer

On Groundsmaster 3280-D and 3320 models only, refer to the traction unit *Operator's Manual* for the procedure to adjust the counterbalance pressure for best performance.

Using the Grass Deflector

⚠ DANGER

Without a grass deflector, discharge cover, or complete grass catcher assembly mounted in place, you and others are exposed to blade contact and thrown debris. Contact with rotating mower blade(s) and thrown debris will cause injury or death.

- **Never remove the grass deflector from the mower because the grass deflector routes material down toward the turf. If the grass deflector is ever damaged, replace it immediately.**
- **Never put your hands or feet under the mower.**
- **Never try to clear the discharge area or mower blades unless you move the power take off (blade control switch (PTO) to the OFF position, rotate the ignition key to the OFF position and remove the key.**
- **Make sure that the grass deflector is in the down position.**

Note: The deflector is spring loaded into its downward normal operating position (Figure 14), but you can temporarily swing it out of the way when necessary.

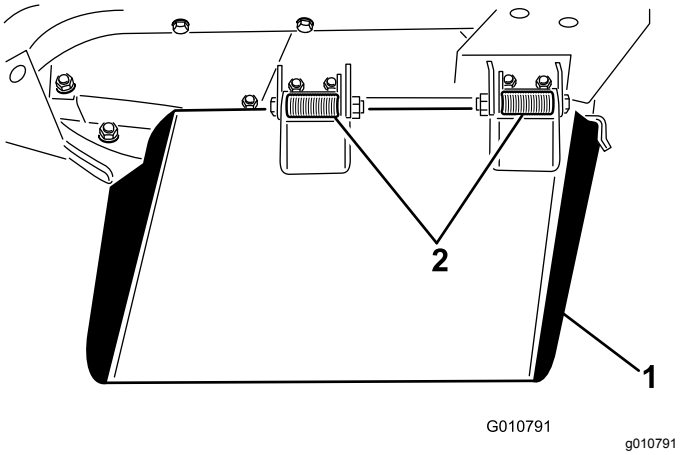

Figure 14

1. Grass deflector
2. Spring hinges

Operating Tips

Fast Throttle Setting/Ground Speed

To maintain enough power for the machine and deck while mowing, operate the engine at the fast throttle position and adjust your ground speed for conditions. Decrease the ground speed as the load on the cutting blades increases. Increase the ground speed as the load on the blades decreases.

Mowing Direction

Alternate mowing direction to avoid making ruts in the turf over time. This also helps disperse clippings which enhances decomposition and fertilization.

Cutting Speed

To improve cut quality, use a slower ground speed.

Avoid Cutting Too Low

If the cutting width of the cutting unit is wider than the mower you previously used, raise the cutting height to ensure that uneven turf is not cut too short.

Select the Proper Height-of-Cut Setting to Suit Conditions

Remove approximately 25 mm (1 inch) or no more than 1/3 of the grass blade when cutting. In exceptionally lush and dense grass, you may need to slow down the forward speed and/or raise the height of cut to the next higher setting.

Important: **If cutting more than 1/3 of the grass blade off, or in sparse long grass or dry conditions, the use of flat sail blades is recommended to reduce air-borne chaff, debris, and deck drive component strain.**

Long Grass

If the grass is ever allowed to grow slightly longer than normal, or if it contains a high degree of moisture, raise the cutting height higher than usual and cut the grass at this setting. Then cut the grass again using the lower, normal setting.

Keep the Cutting Unit Clean

Clean clippings and dirt from the underside of the cutting unit after each use. If grass and dirt build up inside the cutting unit, the cutting quality will eventually become unsatisfactory.

To reduce the risk of fire hazard, keep the engine, muffler, battery compartment, parking brake, cutting units, and fuel storage compartment free of grass, leaves, or excessive grease. Clean up any spilled oil or fuel.

Blade Maintenance

Maintain a sharp blade throughout the cutting season because a sharp blade cuts cleanly without tearing or shredding the grass blades. Tearing and shredding turns grass brown at the edges, which slows growth and increases the chance of disease. Check the blades daily for sharpness, and for any wear or damage. Sharpen the blades as necessary. If a blade is damaged or worn, replace it immediately with a genuine Toro replacement blade. Refer to Removing and Installing the Cutting-Unit Blade(s) (page 21).

Maintenance

Recommended Maintenance Schedule(s)

Maintenance Service Interval	Maintenance Procedure
After the first 2 hours	• Tighten the castor wheel nuts.
After the first 10 hours	• Tighten the castor wheel nuts.
Before each use or daily	• Lubricate the castor arm bushings. • Lubricate the castor wheel bearings.
After each use	• Clean the cutting unit.
Every 50 hours	• Lubricate the grease fittings. • Check the gearbox lubricant. • Tighten the castor wheel nuts.
Every 400 hours	• Change the gearbox lubricant.

Daily Maintenance Checklist

Duplicate this page for routine use.

Maintenance Check Item	For the week of:						
	Mon.	Tues.	Wed.	Thurs.	Fri.	Sat.	Sun.
Check the grass deflector in the down position (if applicable).							
Check the tire pressure.							
Check the condition of the blades.							
Lubricate all the grease fittings.[1]							
Touch-up damaged paint.							
1. Immediately after every washing, regardless of the interval listed.							

Notation for Areas of Concern		
Inspection performed by:		
Item	Date	Information

⚠ CAUTION

If you leave the key in the ignition switch, someone could accidently start the engine and seriously injure you or other bystanders.

Remove the key from the ignition before you do any maintenance.

Important: **The fasteners on the covers of this machine are designed to remain on the cover after removal. Loosen all the fasteners on each cover a few turns so that the cover is loose but still attached, then go back and loosen them until the cover comes free. This prevents you from accidentally stripping the bolts free of the retainers.**

Lubrication

Service Interval: Every 50 hours

The machine has grease fittings that you must lubricate regularly with No. 2 lithium grease. Lubricate all bearings and bushings immediately after every washing.

Lubricate the following areas:

- Front castor spindle bushings (Figure 15)
- Front and rear castor wheel bearings (Figure 15)

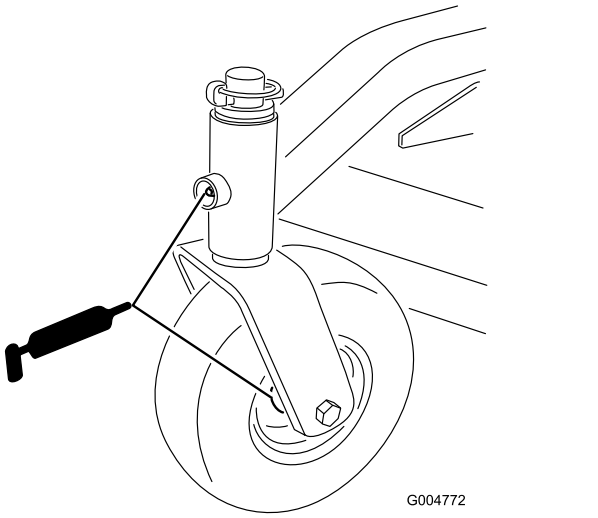

Figure 15

- Right and left lift arm pivot pins (Figure 16)

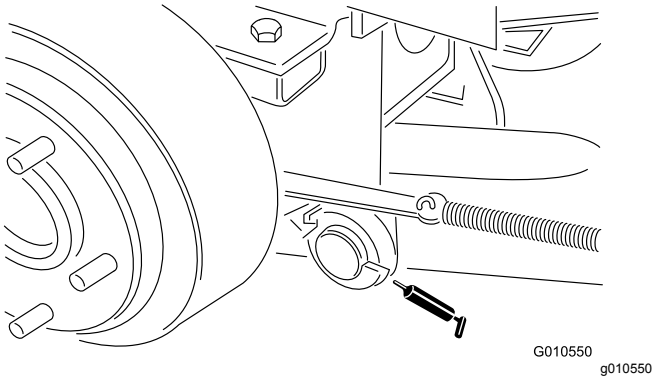

Figure 16

- Blade spindle bearings (Figure 17)

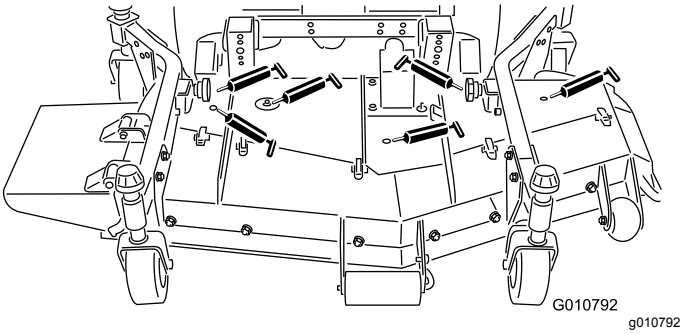

Figure 17

- Right and left push arm ball joints (Figure 17)

Checking the Lubricant in the Gearbox

Service Interval: Every 50 hours

The gearbox is designed to operate on either petroleum or synthetic SAE 80W–90 gear lube. Although the gearbox is shipped with lubricant from the factory, check the level before operating the cutting unit. The gearbox capacity is 283 ml (12 oz).

1. Position the machine and cutting unit on a level surface.
2. Remove the dipstick/fill plug from the top of the gearbox (Figure 18) and make sure that the lubricant is between the marks on the dipstick. If the lubricant level is low, add enough lubricant until the level is between the marks.

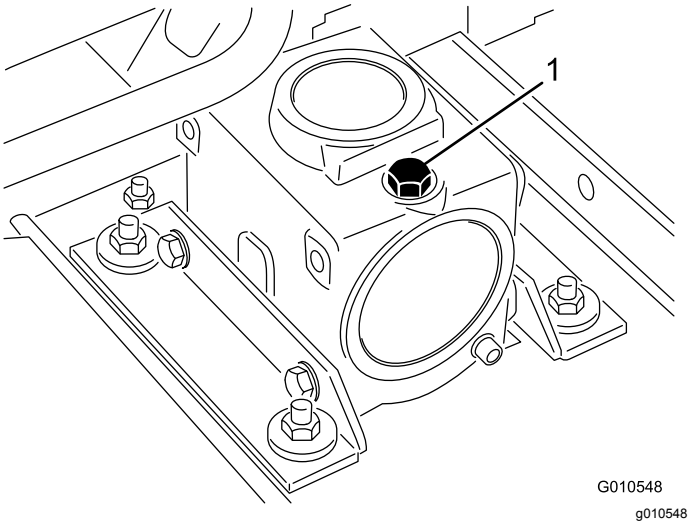

Figure 18

1. Dipstick/fill plug

Separating the Cutting Unit from the Traction Unit

1. Position the machine on a level surface.
2. Lower the cutting unit to the floor, move the lift lever to the FLOAT position, engage the parking brake, put the traction pedal in neutral, set the PTO lever in the OFF position, shut the engine off, and remove the ignition key.
3. Remove the capscrews and locknuts securing the ball joint mounts to the castor arms on the cutting unit (Figure 19).

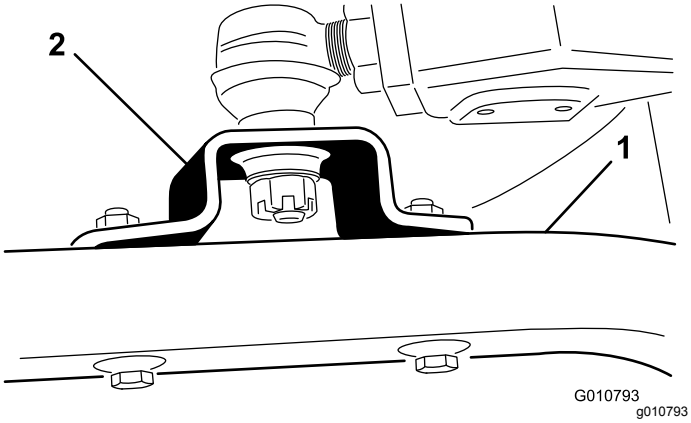

Figure 19

1. Castor arm
2. Ball joint mount

4. Roll the cutting unit away from the traction unit, separating the male and female sections of the PTO shaft (Figure 20).

⚠ DANGER

If the engine is started and the PTO shaft is allowed to rotate, serious injury could result.

Do not start the engine and engage the PTO lever when the PTO shaft is not connected to the gearbox on the cutting unit.

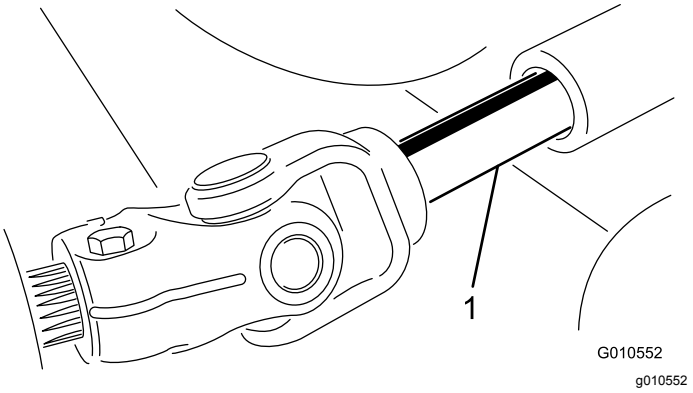

Figure 20

1. PTO shaft

Servicing the Bushings in the Castor Arms

The castor arms have bushings pressed into the top and bottom portion of the tube which, after many hours of operation, will wear. To check the bushings, move the castor fork back and forth and from side to side. If the castor shaft is loose inside the bushings, the bushings are worn and must be replaced.

1. Raise the cutting unit so that the wheels are off the floor and block it so that it cannot fall.
2. Remove the tensioning cap, spacer(s), and thrust washer from the top of the castor spindle.
3. Pull the castor spindle out of the mounting tube. Allow the thrust washer and spacer(s) to remain on the bottom of the spindle.
4. Insert a pin punch into the top or bottom of the mounting tube, and drive the bushing out of the tube (Figure 21). Also, drive the other bushing out of the tube.

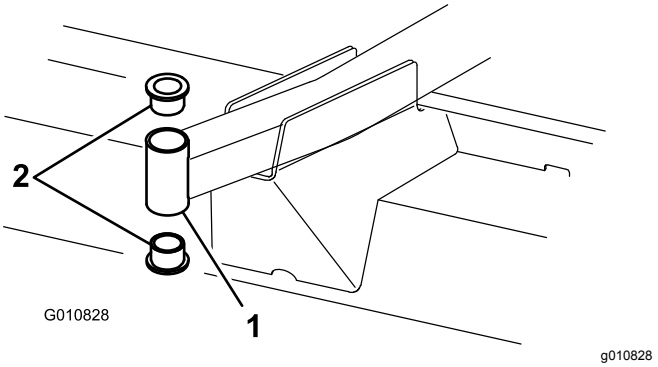

Figure 21

1. Front castor arm tube
2. Bushings

5. Clean the inside of the mounting tubes to remove any dirt.
6. Apply grease to the inside and outside of the new bushings.

7. Use a hammer and flat plate to drive the bushings into the mounting tube.
8. Inspect the castor spindle for wear, and replace it if it is damaged.
9. Push the castor shaft through the bushings and mounting tube.
10. Slide the thrust washer and spacer(s) onto the spindle.
11. Install the tensioning cap on the castor spindle to retain all the parts in place.

Servicing the Castor Wheels and Bearings

The castor wheel rotates on a high-quality roller bearing and is supported by a spanner bushing. Even after many hours of use, provided that the bearing was kept well lubricated, bearing wear will be minimal. However, failing to keep the bearing lubricated will cause rapid wear. A wobbly castor wheel usually indicates a worn bearing.

1. Remove the locknut from the capscrew holding the castor wheel assembly between the castor fork (Figure 22).

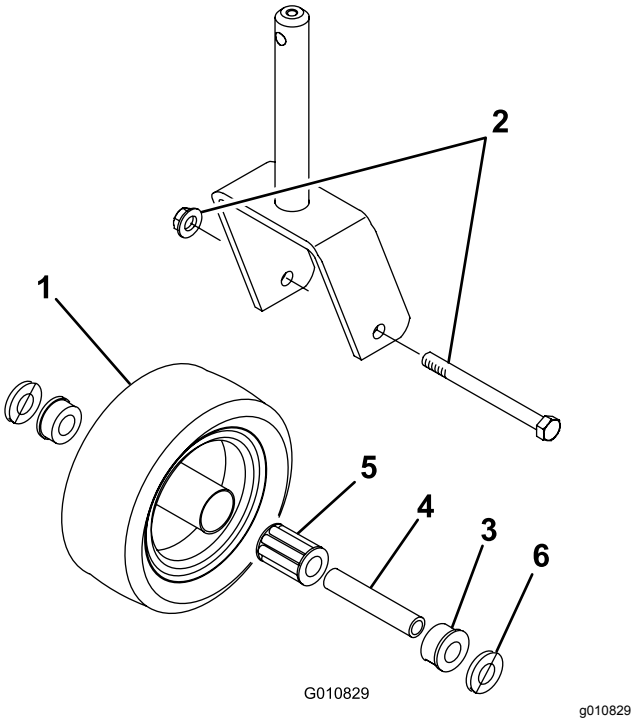

Figure 22

1. Castor wheel
2. Capscrew and locknut
3. Bushing (2)
4. Spanner bushing
5. Roller bearing
6. Washer (2)

2. Grasp the castor wheel and slide the capscrew out of the fork.
3. Pull the spanner bushing out of the wheel hub (Figure 22).
4. Remove the bushing from the wheel hub and allow the bearing to fall out.
5. Remove the bushing from the opposite side of the wheel hub.
6. Check the bearing, spanner, and inside of the wheel hub for wear, and replace any damaged parts.
7. To assemble the castor wheel, push the bushing into the wheel hub.
8. Slide the bearing into the wheel hub.
9. Push the other bushing into the open end of the wheel hub to captivate the bearing inside the wheel hub (Figure 22).
10. Carefully slide the spanner through the bushings and the wheel hub.
11. Install the castor wheel assembly between the castor fork and secure it in place with the capscrew, washers, and locknut.
12. Lubricate the castor wheel bearing through the grease fitting with No. 2 lithium grease.

Servicing the Cutting Blades

Blade Safety

- Inspect the blade periodically for wear or damage.
- Use care when checking the blades. Wrap the blades or wear gloves, and use caution when servicing the blades. Only replace or sharpen the blades; never straighten or weld them.
- On multi-bladed machines, take care as rotating a blade can cause other blades to rotate.

Checking for a Bent Blade

After striking a foreign object, inspect the machine for damage and make repairs before starting and operating the equipment. Torque all the spindle-pulley nuts to 176 to 203 N·m (130 to 150 ft-lb).

1. Position the machine on a level surface, raise the cutting unit, engage the parking brake, put the traction pedal in NEUTRAL, put the PTO lever in the OFF position, shut off the engine, and remove the ignition key.

   Note: Block the cutting unit to prevent it from accidentally falling.

2. Rotate the blade until the ends face forward and backward and measure from the inside of the cutting unit to the cutting edge at the front of the blade (Figure 23).

   Note: Remember this dimension.



Figure 23

3. Rotate the opposite end of the blade forward and measure between the cutting unit and cutting edge of the blade at the same position as in step 2.

   Note: The difference between the dimensions obtained in steps 2 and 3 must not exceed 3 mm (1/8 inch). If the dimension exceeds 3 mm (1/8 inch), the blade is bent and must be replaced; refer to Removing and Installing the Cutting-Unit Blade(s) (page 21).

Removing and Installing the Cutting-Unit Blade(s)

Replace the blade if it hits a solid object, is out of balance, or is bent. Always use genuine Toro replacement blades to ensure safety and optimum performance.

1. Park the machine on a level surface, raise the cutting unit to the transport position, engage the parking brake, shut off the engine, and remove the key.

   Note: Block or lock the cutting unit to prevent it from accidentally falling.

2. Grasp the end of the blade using a rag or thickly-padded glove.
3. Remove the blade bolt, anti-scalp cup, and blade from the spindle shaft (Figure 24).

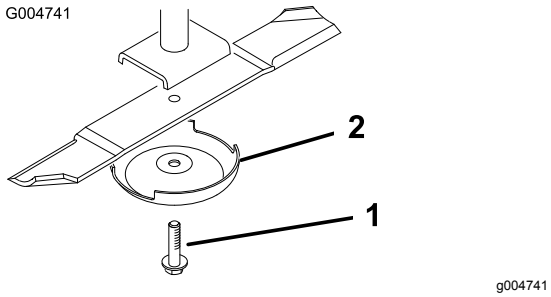

Figure 24

1. Blade bolt
2. Anti-scalp cup

4. Install the blade, anti-scalp cup, and blade bolt and tighten the blade bolt to 115 to 149 N·m (85 to 110 ft-lb).

Important: **The curved part of the blade must point toward the inside of the cutting unit to ensure proper cutting.**

Note: After striking a foreign object, torque all spindle-pulley nuts to 115 to 149 N·m (85 to 110 ft-lb).

Inspecting and Sharpening the Cutting Unit Blade(s)

Both cutting edges and the sail, which is the turned-up portion opposite of the cutting edge, contribute to a good quality of cut.

Maintain sharp blades throughout the cutting season. Sharp blades create a clean cut without tearing or shredding the grass blades.

Check the blades for any wear or damage. The sail lifts the grass up straight, thereby producing an even cut and gradually wears down during operation.

1. Park the machine on a level surface, raise the cutting unit, engage the parking brake, put the traction pedal in NEUTRAL, put the PTO lever in the OFF position, shut off the engine, and remove the key from the ignition.
2. Examine the cutting ends of the blade carefully, especially where the flat and curved parts of the blade meet (Figure 25).

   Note: Because sand and abrasive material can wear away the metal that connects the flat and curved parts of the blade, check the blade before using the mower. If you notice wear (Figure 25), replace the blade.

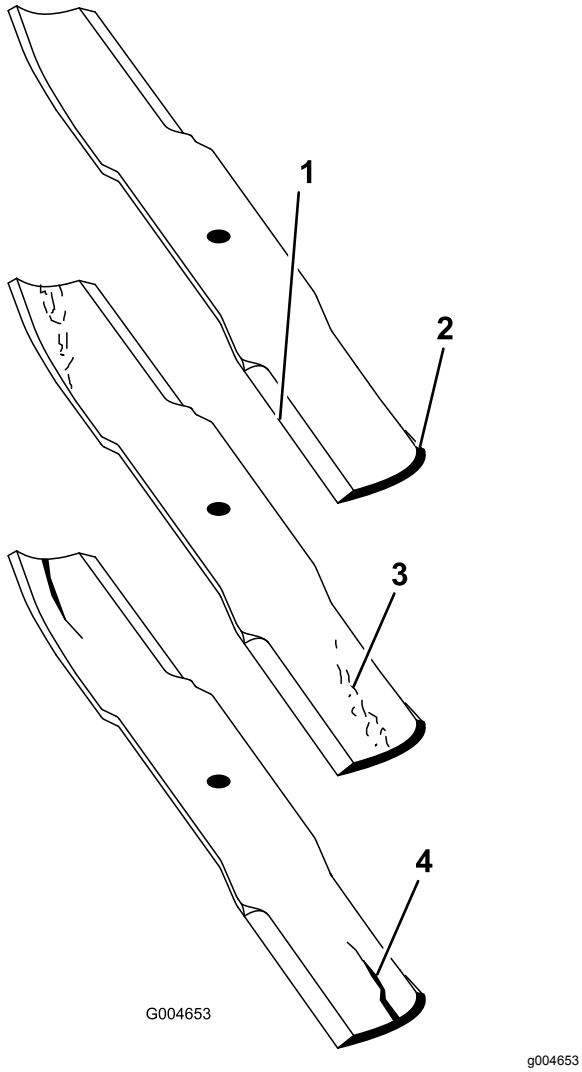

Figure 25

1. Cutting edge
2. Curved area
3. Wear/slot forming
4. Crack

3. Examine the cutting edges of all of the blades and sharpen the cutting edges if they are dull or nicked (Figure 26).

   Note: Sharpen only the top of the cutting edge and maintain the original cutting angle to ensure sharpness (Figure 26). The blade remains balanced if the same amount of metal is removed from both cutting edges.

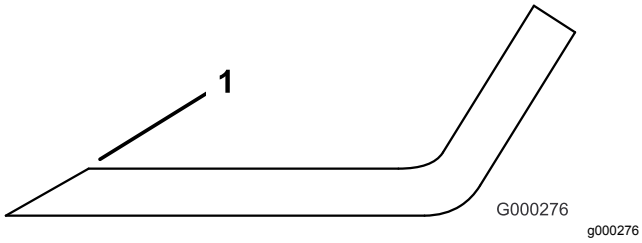

Figure 26

1. Sharpen at the original angle.

Note: Remove the blades and sharpen them on a grinder. After sharpening the cutting edges, install the blade with the anti-scalp cup and blade bolt; refer to Removing and Installing the Cutting-Unit Blade(s) (page 21).

Checking and Correcting Mismatch of Blades

If a cutting blade cuts lower than the others, correct them as follows:

1. Lower the cutting unit onto a level surface, engage the parking brake, put the traction pedal in neutral and the PTO lever in the OFF position, shut the engine off, and remove the ignition key.
2. Ensure that the tire pressure is equal in all the tires.
3. Raise the height-of-cut to the 102 mm (4 inches) position; refer to Adjusting the Height of Cut (page 12).
4. Rotate the blades so that the tips line up with one another.

   Note: The tips of the adjacent blades must be within 3 mm (1/8 inch) of each other. If the tips are not within 3 mm (1/8 inch) of each other, proceed to step 10 and add shims between the spindle housing and bottom of the cutting unit.
5. Ensure that the front height-of-cut pins are resting properly on the frame cushions. If the pins are not resting properly, place a shim or shims under the cushion to raise it for proper alignment.
6. Position all 3 blades in the A position (Figure 27), and measure from the level surface to the bottom of the tip end of each blade (Figure 28), and note the measurement.

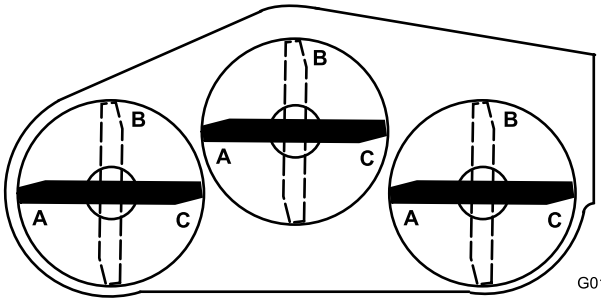

Figure 27

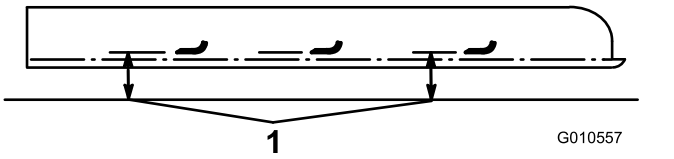

Figure 28

1. Measure from the blade tip to a level surface.

7. Rotate the blades to the B position (Figure 27), measure the distance of all the blades to the level surface, and note the dimensions (Figure 28).
8. Rotate the blades to the C position, measure, and note the distance measured (Figure 27 and Figure 28).
9. Compare the measurements at the various positions.

   Note: All dimensions must be equal within 6 mm (1/4 inch) from any 2 adjacent blades. The difference between the dimensions of all 3 blades must not exceed 10 mm (3/8 inch). If the difference exceeds specifications, proceed to step 10.
10. Remove the capscrews, flat washers, and locknuts from the outer spindle in the area where the shims must be added.

    Note: To raise or lower the blade, add a shim, Part No. 3256-24, between the spindle housing and bottom of the cutting unit.
11. Continue checking the alignment of the blades and adding shims until the tips of the blades are within the required dimension.

Adjusting the Idler Pulley

The idler pulley applies force against the belt so that power can be transmitted to the blade pulleys. If the idler is not tensioned against the belt with sufficient force, maximum power will not be transmitted to the pulleys. Tension on the belt requires 47 to 54 N·m (35 to 40 ft-lb) of torque on the large nut, which applies force against the belt. If the idler is not adjusted to these specifications, adjust it.

Important: **The fasteners on the covers of this machine are designed to remain on the cover after removal. Loosen all of the fasteners on each cover a few turns so that the cover is loose but still attached, then go back and loosen them until the cover comes free. This will prevent you from accidentally stripping the bolts free of the retainers.**

1. Position the machine on a level surface.
2. Lower the cutting unit, engage the parking brake, put the traction pedal in neutral, the PTO lever in the OFF position, shut the engine off, and remove the ignition key.
3. Remove the cover from the center cutting unit.
4. Loosen the 2 nuts that secure the idler plate in place.
5. Use a socket and torque wrench to tighten the idler adjusting nut to 47 to 54 N-m (35 to 40 ft-lb) (Figure 29).

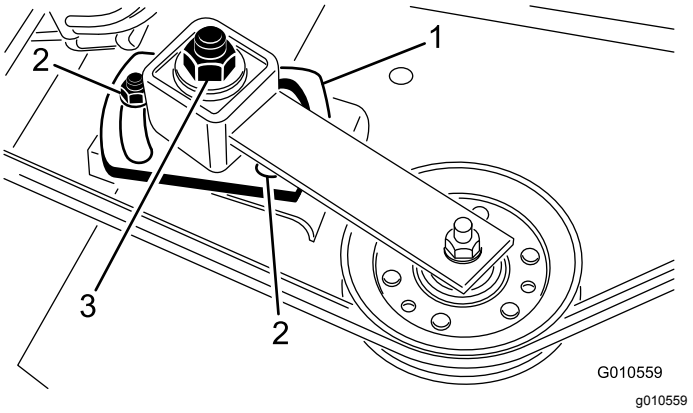

Figure 29

1. Idler plate
2. Nuts (2)
3. Idler adjusting nut

6. Hold the torque against the belt and tighten the 2 nuts so that the idler plate is held securely in place.
7. Release the idler adjusting nut.
8. Install the cover.

Replacing the Drive Belt

The blade drive belt, tensioned by the adjustable idler, is very durable. However, after many hours of use, the belt will show signs of wear. Signs of a worn belt include: squealing when belt is rotating, blades slipping when cutting grass, frayed edges, burn marks, and cracks. Replace the belt if any of these conditions exist.

Important: **The fasteners on the covers of this machine are designed to remain on the cover after removal. Loosen all of the fasteners on each cover a few turns so that the cover is loose but still attached, then go back and loosen them until the cover comes free. This will prevent you from accidentally stripping the bolts free of the retainers.**

1. Position the machine on a level surface.
2. Lower the cutting unit, engage the parking brake, put the traction pedal in neutral and the

PTO lever in the OFF position, shut the engine off, and remove the ignition key.

3. Remove the covers from the top of the cutting unit.
4. Loosen the 2 nuts that secure the idler plate in place, and remove the old belt from the pulleys.
5. To install a new belt, you must remove the gearbox by removing the 4 carriage bolts and locknuts holding the gearbox base.
6. Install the new belt around the gearbox pulley, spindle pulleys, stationary idler pulley, and adjustable idler pulley (Figure 30).

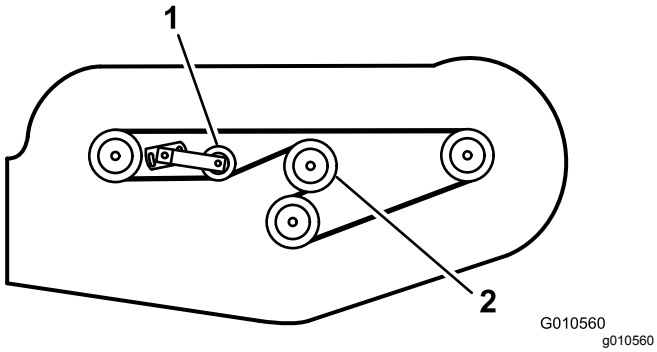

Figure 30

1. Adjustable idler pulley
2. Gearbox pulley

7. Install the gearbox base with the carriage bolts and locknuts.
8. Use a torque wrench to adjust the tension of the idler pulley against the belt; refer to Adjusting the Idler Pulley (page 23).
9. Install the covers.

Replacing the Grass Deflector

1. Position the machine on a level surface.
2. Raise the cutting unit, engage the parking brake, put the traction pedal in neutral and the PTO lever in the OFF position, shut off the engine, and remove the ignition key.
3. Block the cutting unit to prevent it from accidentally falling.
4. Remove the 2 capscrews, locknuts, and springs that secure the deflector mounts to the pivot brackets (Figure 31).

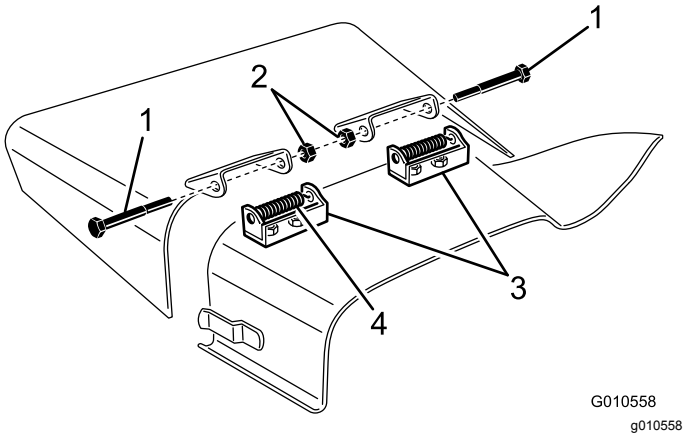

Figure 31

1. Bolt
2. Locknuts
3. Pivot brackets
4. Spring

5. To remove the pivot brackets, remove the carriage bolts and nuts (Figure 31).
6. Install the pivot brackets on top of the discharge opening with the carriage bolts and nuts.

   Note: The head of the carriage bolts must be on the inside of the cutting unit.
7. Position the deflector mounts on the pivot brackets and secure the parts together with the capscrews, locknuts, and springs.

   Note: Both locknuts must face each other. Tighten the locknuts until they are flush against the deflector pivots.
8. Lift the deflector and allow it to drop to check the spring tension.

   Note: The deflector must be held firmly in the full downward position by the spring tension. Correct it if necessary.

Cleaning Under the Cutting Unit

Service Interval: After each use

1. Disengage the PTO, release the traction pedal to the NEUTRAL position, and engage the parking brake.
2. Move the throttle lever to the SLOW position, shut off the engine, remove the key, and wait for all moving parts to stop before leaving the operator's position.
3. Raise the cutting unit to the TRANSPORT position.
4. Use a jack to raise the front of the machine and support it with jack stands.
5. Thoroughly clean the underside of the cutting unit with water.

Storage

1. Disengage the PTO, release the traction pedal to the neutral position, lower the cutting unit, move the throttle lever to the SLOW position, and engage the parking brake.
2. Shut off the engine, remove the key, and wait for all movement to stop before you leave the operator's position. Allow the machine to cool before adjusting, servicing, cleaning, or storing it.
3. Thoroughly clean the cutting unit, paying special attention to these areas:
   - Underneath the cutting unit
   - Under the cutting unit belt covers
   - PTO shaft assembly
   - All grease fittings and pivot points
4. Check and adjust the traction-unit front and rear tire pressure; refer to the traction-unit *Operator's Manual*.
5. Remove, sharpen, and balance the cutting unit blades. Install the blades and torque the blade fasteners to 85 to 110 ft-lb (115 to 149 N·m).
6. Check all fasteners for looseness and tighten them as necessary.
7. Grease or oil all grease fittings and pivot points. Wipe off any excess lubricant.
8. Lightly sand and use touch-up paint on painted areas that are scratched, chipped, or rusted. Repair any dents.

Troubleshooting

Problem	Possible Cause	Corrective Action
The cutting unit does not cut or cuts poorly.	1. The blades are dull.	1. Sharpen the blades.
	2. One or more blades are bent or damaged.	2. Replace the blades.
	3. The spindle bolts are loose.	3. Torque the spindle bolts to 115 to 149 N-m (85 to 110 ft-lb).
	4. The cutting unit belts are loose or broken.	4. Tighten or replace the belts as necessary.
	5. The gearbox pulley is loose.	5. Tighten or replace the pulley.
	6. A gearbox shaft is broken.	6. Replace any broken shafts.
	7. The PTO belt is broken.	7. Replace the PTO belt.
	8. The PTO pulley is loose or broken.	8. Tighten or replace the pulley.
	9. The PTO shaft is broken.	9. Replace the PTO shaft.
	10. The pulley on the engine output shaft is loose or broken.	10. Tighten or replace the pulley.

Notes:

Notes:

Notes:

Declaration of Incorporation

The Toro Company, 8111 Lyndale Ave. South, Bloomington, MN, USA declares that the following unit(s) conform(s) to the directives listed, when installed in accordance with the accompanying instructions onto certain Toro models as indicated on the relevant Declarations of Conformity.

Model No.	Serial No.	Product Description	Invoice Description	General Description	Directive
30551	314000001 and Up	62in Side Discharge Mower	62” SIDE DISCHARGE MOWER	62in Side Discharge Mower	2006/42/EC, 2000/14/EC

Relevant technical documentation has been compiled as required per Part B of Annex VII of 2006/42/EC.

We will undertake to transmit, in response to requests by national authorities, relevant information on this partly completed machinery. The method of transmission shall be electronic transmittal.

This machinery shall not be put into service until incorporated into approved Toro models as indicated on the associated Declaration of Conformity and in accordance with all instructions, whereby it can be declared in conformity with all relevant Directives.

Certified:



John Heckel
Sr. Engineering Manager
8111 Lyndale Ave. South
Bloomington, MN 55420, USA
March 9, 2019

Authorized Representative:

Marcel Dutrieux
Manager European Product Integrity
Toro Europe NV
Nijverheidsstraat 5
2260 Oevel
Belgium

California Proposition 65 Warning Information

What is this warning?

You may see a product for sale that has a warning label like the following:



WARNING: Cancer and Reproductive Harm—www.p65Warnings.ca.gov.

What is Prop 65?

Prop 65 applies to any company operating in California, selling products in California, or manufacturing products that may be sold in or brought into California. It mandates that the Governor of California maintain and publish a list of chemicals known to cause cancer, birth defects, and/or other reproductive harm. The list, which is updated annually, includes hundreds of chemicals found in many everyday items. The purpose of Prop 65 is to inform the public about exposure to these chemicals.

Prop 65 does not ban the sale of products containing these chemicals but instead requires warnings on any product, product packaging, or literature with the product. Moreover, a Prop 65 warning does not mean that a product is in violation of any product safety standards or requirements. In fact, the California government has clarified that a Prop 65 warning "is not the same as a regulatory decision that a product is 'safe' or 'unsafe.'" Many of these chemicals have been used in everyday products for years without documented harm. For more information, go to https://oag.ca.gov/prop65/faqs-view-all.

A Prop 65 warning means that a company has either (1) evaluated the exposure and has concluded that it exceeds the "no significant risk level"; or (2) has chosen to provide a warning based on its understanding about the presence of a listed chemical without attempting to evaluate the exposure.

Does this law apply everywhere?

Prop 65 warnings are required under California law only. These warnings are seen throughout California in a wide range of settings, including but not limited to restaurants, grocery stores, hotels, schools, and hospitals, and on a wide variety of products. Additionally, some online and mail order retailers provide Prop 65 warnings on their websites or in catalogs.

How do the California warnings compare to federal limits?

Prop 65 standards are often more stringent than federal and international standards. There are various substances that require a Prop 65 warning at levels that are far lower than federal action limits. For example, the Prop 65 standard for warnings for lead is 0.5 µg/day, which is well below the federal and international standards.

Why don't all similar products carry the warning?

- Products sold in California require Prop 65 labelling while similar products sold elsewhere do not.
- A company involved in a Prop 65 lawsuit reaching a settlement may be required to use Prop 65 warnings for its products, but other companies making similar products may have no such requirement.
- The enforcement of Prop 65 is inconsistent.
- Companies may elect not to provide warnings because they conclude that they are not required to do so under Prop 65; a lack of warnings for a product does not mean that the product is free of listed chemicals at similar levels.

Why does Toro include this warning?

Toro has chosen to provide consumers with as much information as possible so that they can make informed decisions about the products they buy and use. Toro provides warnings in certain cases based on its knowledge of the presence of one or more listed chemicals without evaluating the level of exposure, as not all the listed chemicals provide exposure limit requirements. While the exposure from Toro products may be negligible or well within the "no significant risk" range, out of an abundance of caution, Toro has elected to provide the Prop 65 warnings. Moreover, if Toro does not provide these warnings, it could be sued by the State of California or by private parties seeking to enforce Prop 65 and subject to substantial penalties.

The Toro Warranty

Two-Year or 1,500 Hours Limited Warranty

Conditions and Products Covered

The Toro Company and its affiliate, Toro Warranty Company, pursuant to an agreement between them, jointly warrant your Toro Commercial product ("Product") to be free from defects in materials or workmanship for 2 years or 1,500 operational hours*, whichever occurs first. This warranty is applicable to all products with the exception of Aerators (refer to separate warranty statements for these products). Where a warrantable condition exists, we will repair the Product at no cost to you including diagnostics, labor, parts, and transportation. This warranty begins on the date the Product is delivered to the original retail purchaser.
* Product equipped with an hour meter.

Instructions for Obtaining Warranty Service

You are responsible for notifying the Commercial Products Distributor or Authorized Commercial Products Dealer from whom you purchased the Product as soon as you believe a warrantable condition exists. If you need help locating a Commercial Products Distributor or Authorized Dealer, or if you have questions regarding your warranty rights or responsibilities, you may contact us at:

Toro Commercial Products Service Department
Toro Warranty Company
8111 Lyndale Avenue South
Bloomington, MN 55420-1196

952–888–8801 or 800–952–2740
E-mail: commercial.warranty@toro.com

Owner Responsibilities

As the product owner, you are responsible for required maintenance and adjustments stated in your *Operator's Manual*. Repairs for product issues caused by failure to perform required maintenance and adjustments are not covered under this warranty.

Items and Conditions Not Covered

Not all product failures or malfunctions that occur during the warranty period are defects in materials or workmanship. This warranty does not cover the following:

- Product failures which result from the use of non-Toro replacement parts, or from installation and use of add-on, or modified non-Toro branded accessories and products.
- Product failures which result from failure to perform recommended maintenance and/or adjustments.
- Product failures which result from operating the Product in an abusive, negligent, or reckless manner.
- Parts consumed through use that are not defective. Examples of parts which are consumed, or used up, during normal Product operation include, but are not limited to, brake pads and linings, clutch linings, blades, reels, rollers and bearings (sealed or greasable), bed knives, spark plugs, castor wheels and bearings, tires, filters, belts, and certain sprayer components such as diaphragms, nozzles, and check valves.
- Failures caused by outside influence, including, but not limited to, weather, storage practices, contamination, use of unapproved fuels, coolants, lubricants, additives, fertilizers, water, or chemicals.
- Failure or performance issues due to the use of fuels (e.g. gasoline, diesel, or biodiesel) that do not conform to their respective industry standards.
- Normal noise, vibration, wear and tear, and deterioration. Normal "wear and tear" includes, but is not limited to, damage to seats due to wear or abrasion, worn painted surfaces, scratched decals or windows.

Parts

Parts scheduled for replacement as required maintenance are warranted for the period of time up to the scheduled replacement time for that part. Parts replaced under this warranty are covered for the duration of the original product warranty and become the property of Toro. Toro will make the final decision whether to repair any existing part or assembly or replace it. Toro may use remanufactured parts for warranty repairs.

Deep Cycle and Lithium-Ion Battery Warranty

Deep cycle and Lithium-Ion batteries have a specified total number of kilowatt-hours they can deliver during their lifetime. Operating, recharging, and maintenance techniques can extend or reduce total battery life. As the batteries in this product are consumed, the amount of useful work between charging intervals will slowly decrease until the battery is completely worn out. Replacement of worn out batteries, due to normal consumption, is the responsibility of the product owner. Note: (Lithium-Ion battery only): Pro-rated after 2 years. Refer to the battery warranty for additional information.

Lifetime Crankshaft Warranty (ProStripe 02657 Model Only)

The Prostripe which is fitted with a genuine Toro Friction Disc and Crank-Safe Blade Brake Clutch (integrated Blade Brake Clutch (BBC) + Friction Disc assembly) as original equipment and used by the original purchaser in accordance with recommended operating and maintenance procedures, are covered by a Lifetime Warranty against engine crankshaft bending. Machines fitted with friction washers, Blade Brake Clutch (BBC) units and other such devices are not covered by the Lifetime Crankshaft Warranty.

Maintenance is at Owner's Expense

Engine tune-up, lubrication, cleaning and polishing, replacement of filters, coolant, and completing recommended maintenance are some of the normal services Toro products require that are at the owner's expense.

General Conditions

Repair by an Authorized Toro Distributor or Dealer is your sole remedy under this warranty.

Neither The Toro Company nor Toro Warranty Company is liable for indirect, incidental or consequential damages in connection with the use of the Toro Products covered by this warranty, including any cost or expense of providing substitute equipment or service during reasonable periods of malfunction or non-use pending completion of repairs under this warranty. Except for the Emissions warranty referenced below, if applicable, there is no other express warranty. All implied warranties of merchantability and fitness for use are limited to the duration of this express warranty.

Some states do not allow exclusions of incidental or consequential damages, or limitations on how long an implied warranty lasts, so the above exclusions and limitations may not apply to you. This warranty gives you specific legal rights, and you may also have other rights which vary from state to state.

Note Regarding Emissions Warranty

The Emissions Control System on your Product may be covered by a separate warranty meeting requirements established by the U.S. Environmental Protection Agency (EPA) and/or the California Air Resources Board (CARB). The hour limitations set forth above do not apply to the Emissions Control System Warranty. Refer to the Engine Emission Control Warranty Statement supplied with your product or contained in the engine manufacturer's documentation.

Countries Other than the United States or Canada

Customers who have purchased Toro products exported from the United States or Canada should contact their Toro Distributor (Dealer) to obtain guarantee policies for your country, province, or state. If for any reason you are dissatisfied with your Distributor's service or have difficulty obtaining guarantee information, contact your Authorized Toro Service Center.