Form No. 3430-146 Rev A

TORO®

Count on it.

Parts Catalog

62in Side Discharge Mower

Groundsmaster® 200,1000, 3320 and 3280-D Series Traction Unit

Model No. 30551—Serial No. 400000000 and Up

Register at www.Toro.com.
Original Instructions (EN)

CE

3430-146 A

Ordering Replacement Parts

To order replacement parts, please supply the part number, the quantity, and the description of each part desired.

Understanding Reference Numbers

Each identified part in an illustration has a reference number. The reference number for a part also appears in the parts list, along with other information about the part.

This catalog uses two special reference number formats, one to indicate parts in a service assembly and another to indicate the quantity of a given part in an illustration.

Service Assembly Reference Numbers

Parts in service assemblies have reference numbers in the form a:b. The a represents the reference number of the entire service assembly and the b represents a sequential number unique to each part within the service assembly.

For example, a wheel assembly might be identified by reference number 6, the tire by 6:1, the valve by 6:2, and the wheel by 6:3. When you order the assembly identified by reference number 6, you receive all parts identified by reference numbers 6:1,6:2, and 6:3. However, you may also order any part individually. Reference numbers of this type appear in illustration and in parts lists.

Reference Numbers Indicating Quantity

In an illustration, if a reference number indicates more than one part, the reference number has the form nX y. The n represents the quantity of the part, the X is the multiplication symbol, and the y represents the reference number.

For example, in an illustration, the reference number 2X 37 means that two of the parts identified by reference number 37 are indicated.

Contents

Deck, Deflector and Spindle Assembly 4
Spindle Assembly No. 44-6370 6
Deck Assembly No. 119-4751 7
Cover and Gearbox Assembly 8
Gearbox Assembly No. 131-6083 9
Lift Arm and Caster Arm Assembly 10
Caster Wheel Assembly No. 99-1268 12
Attachments and Accessories 13

© 2019—The Toro® Company
8111 Lyndale Avenue South
Bloomington, MN 55420

Contact us at www.Toro.com.
Printed in the USA.
All Rights Reserved

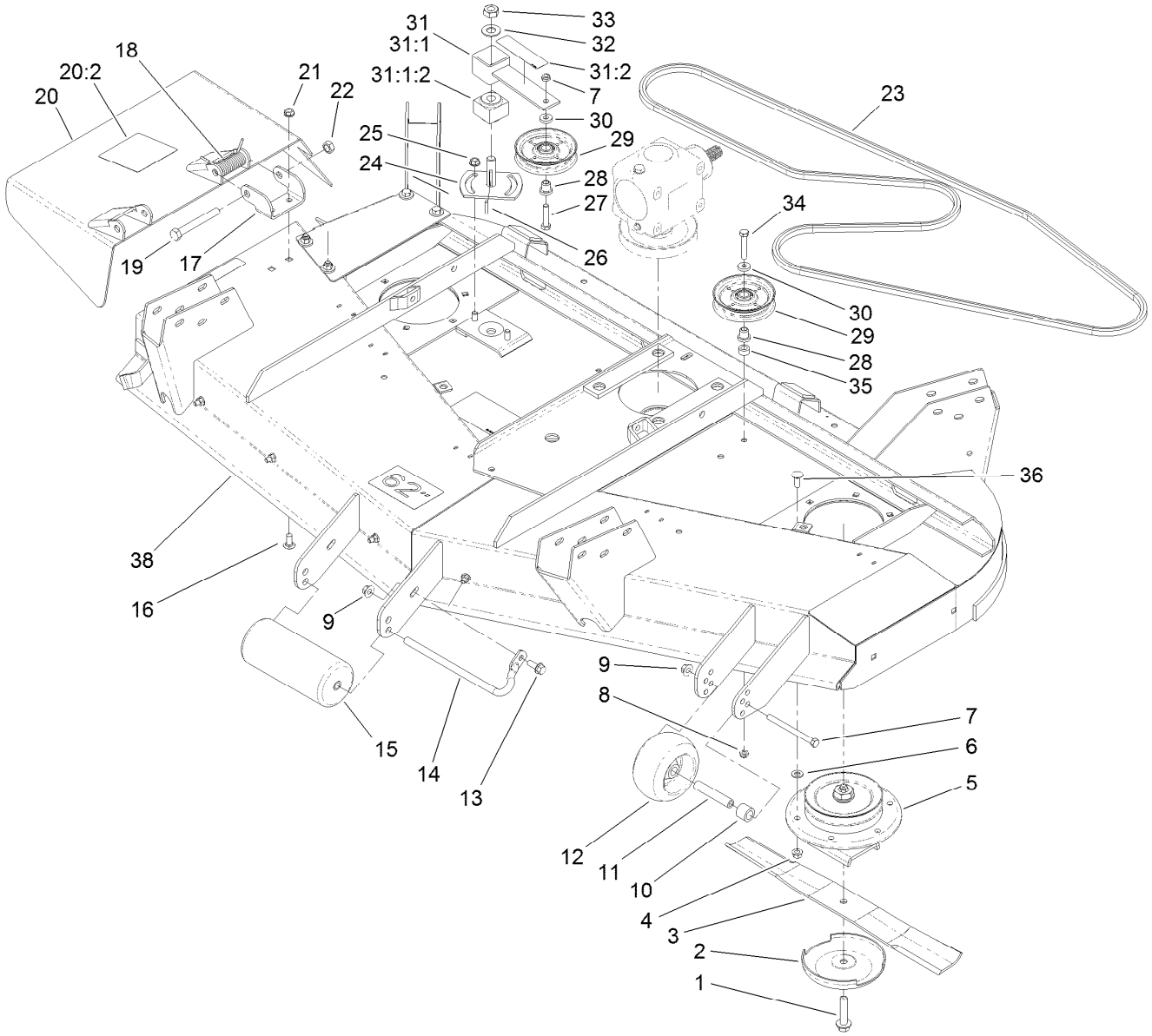

Deck, Deflector and Spindle Assembly

Ref.	Part Number	Qty.	Description
1	92-5816	3	Bolt-Blade
2	72-9361	3	Cup-Scalp, Anti
3	44-6250-03	3	Blade-21.5 Inch
4	32128-21	18	Nut-HF
5	44-6370	3	Spindle ASM
6	3256-24	2	Washer-Flat
7	323-23	1	Screw-HH
8	3296-5	2	Nut-Hex
9	32128-19	2	Nut-HF
10	98-7913	1	Tube-Spacer
11	98-7912	1	Tube-Spanner
12	1-603299	1	Roller-Scalp, Anti
13	3234-11	1	Screw-HHF
14	68-6840	1	Shaft-Roller
15	68-6710	1	Roller
16	3231-27	4	Screw-CARR
17	51-1530-01	2	Hinge Bracket ASM
18	51-1550	2	Spring

Ref.	Part Number	Qty.	Description
19	325-17	2	Screw-HH
20	100-6181	1	Deflector ASM (CE)
20:2	120-6604	1	Decal-Danger
21	32153-5	2	Nut-Hex
22	3290-357	4	Nut-HHF, Whiz
23	44-6260	1	V-Belt
24	44-6300	1	Plate-Idler
25	3290-357	2	Nut-HHF, Whiz
26	5-1077	1	Key-Square
27	3211-8	1	Screw-HH
28	65-5950	2	Bushing-Pulley
29	65-5940	2	Pulley-Idler
30	7-0081	2	Washer-Flat
31	100-6178	1	Idler Arm ASM
31:1		1	Arm-Idler ●
31:1:2	27-8490	1	Bushing-Rubber
31:2	117-4979	1	Decal-Warning
32	3256-27	1	Washer-Flat

● Not serviced separately

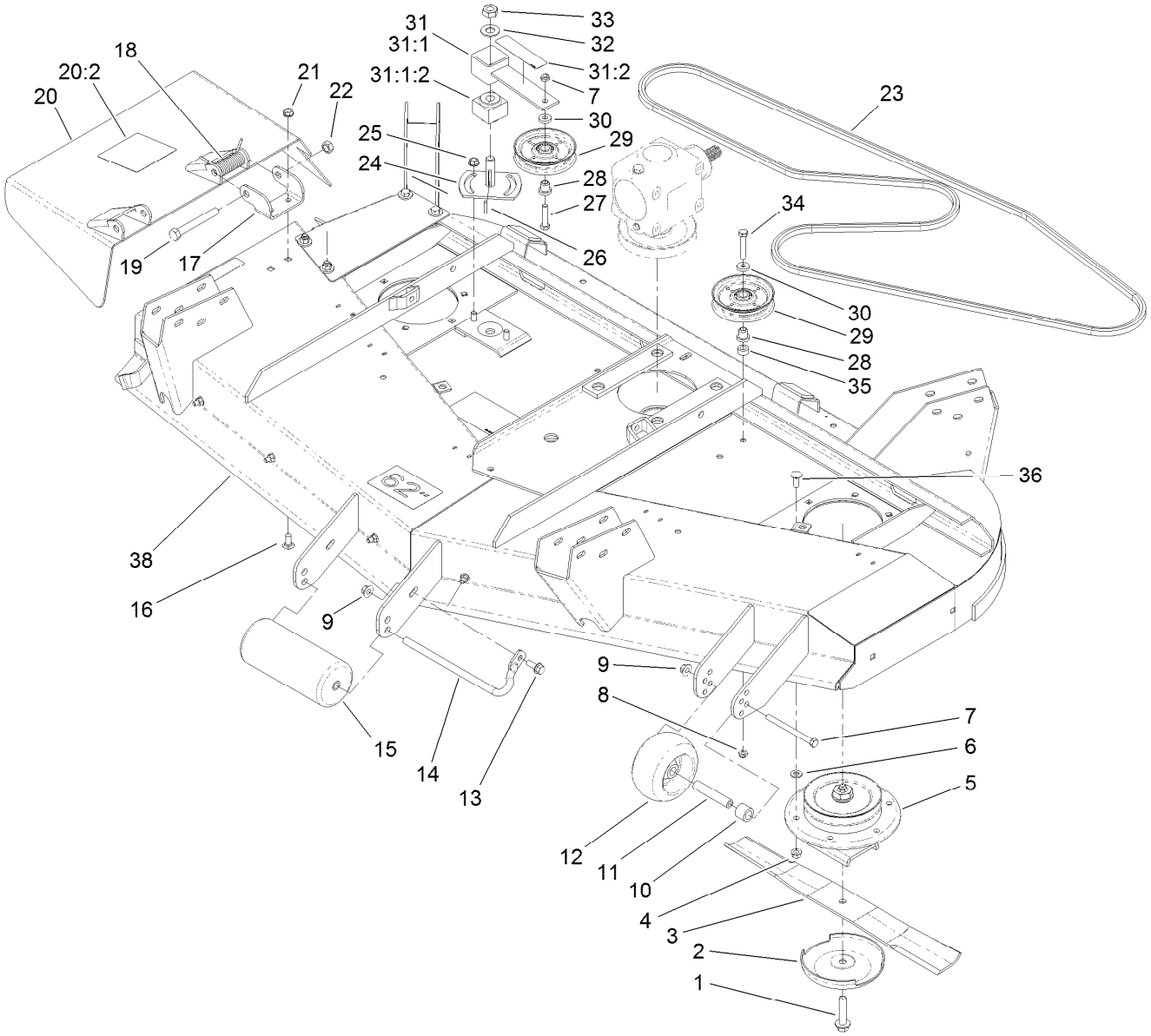

Deck, Deflector and Spindle Assembly (continued)

Ref.	Part Number	Qty.	Description
33	3296-33	1	Nut-Lock, NI
34	3211-9	1	Screw-HH
35	44-6390	1	Spacer
36	3231-22	18	Screw-CARR
38	119-4751	1	Deck ASM

● Not serviced separately

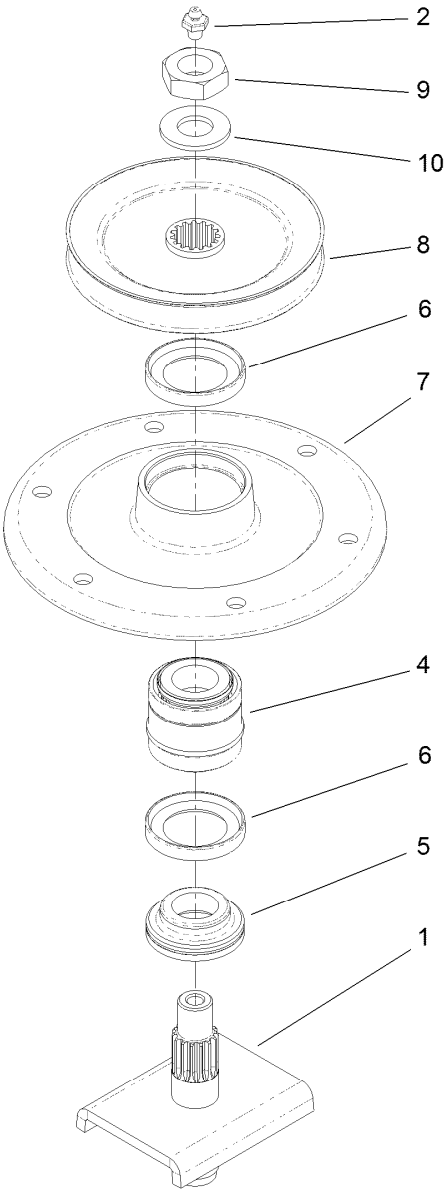

Spindle Assembly No. 44-6370

Ref.	*Part Number*	*Qty.*	*Description*
1	27-0920	1	Shaft
2	302-2	1	Fitting-Grease
4	46-8530	1	Bearing ASM
5	27-0950	1	Spacer
6	253-139	2	Seal-Oil
7	61-4160	1	Housing-Spindle
8	44-6340	1	Pulley And Hub ASM
9	32146-20	1	Nut-Hex
10	7-4150	1	Washer

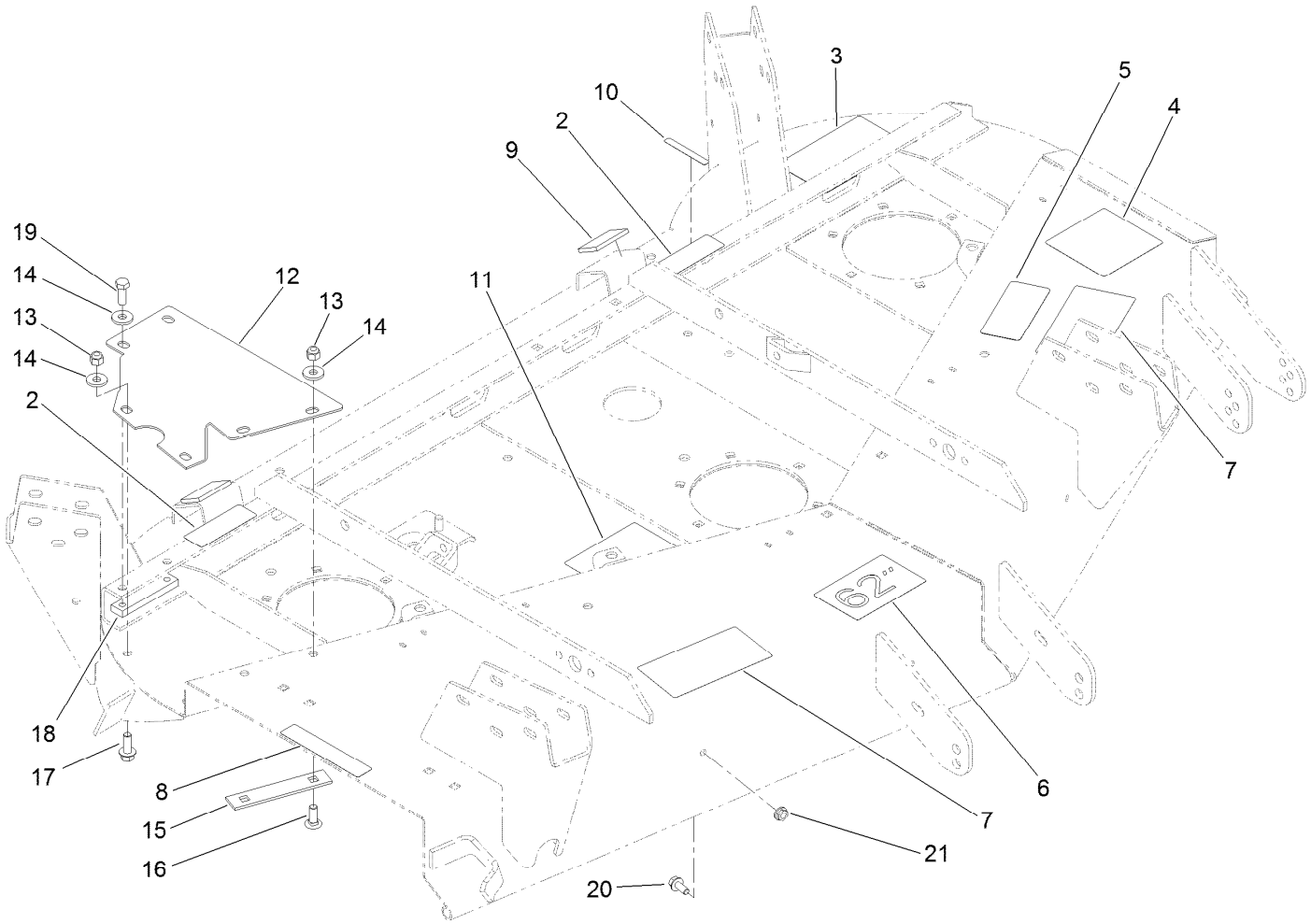

Deck Assembly No. 119-4751

Ref.	Part Number	Qty.	Description
2	117-4979	2	Decal-Warning
3	105-9553	1	Decal-Warning
4	120-6604	1	Decal-Danger
5	93-7818	1	Decal-Torque, Blade Bolt
6	66-1630	1	Decal
7	107-2908	2	Decal-Danger, Combination
8	107-2916	1	Decal-Warning
9	74-0340	2	Cushion-Rubber
10	133-8061	1	Decal-Warning
11	99-5172	1	Decal-Routing, Belt

Ref.	Part Number	Qty.	Description
12	99-5161-01	1	Plate-Stiffener
13	3296-39	4	Nut-Lock, NI
14	5-0838	6	Washer
15	99-5157	1	Plate-Reinforcement
16	3231-22	2	Screw-CARR
17	3234-11	2	Screw-HHF
18	99-5158	1	Block-Tapped
19	323-6	2	Screw-HH
20	3234-5	6	Screw-HHF
21	32128-20	6	Nut-HF

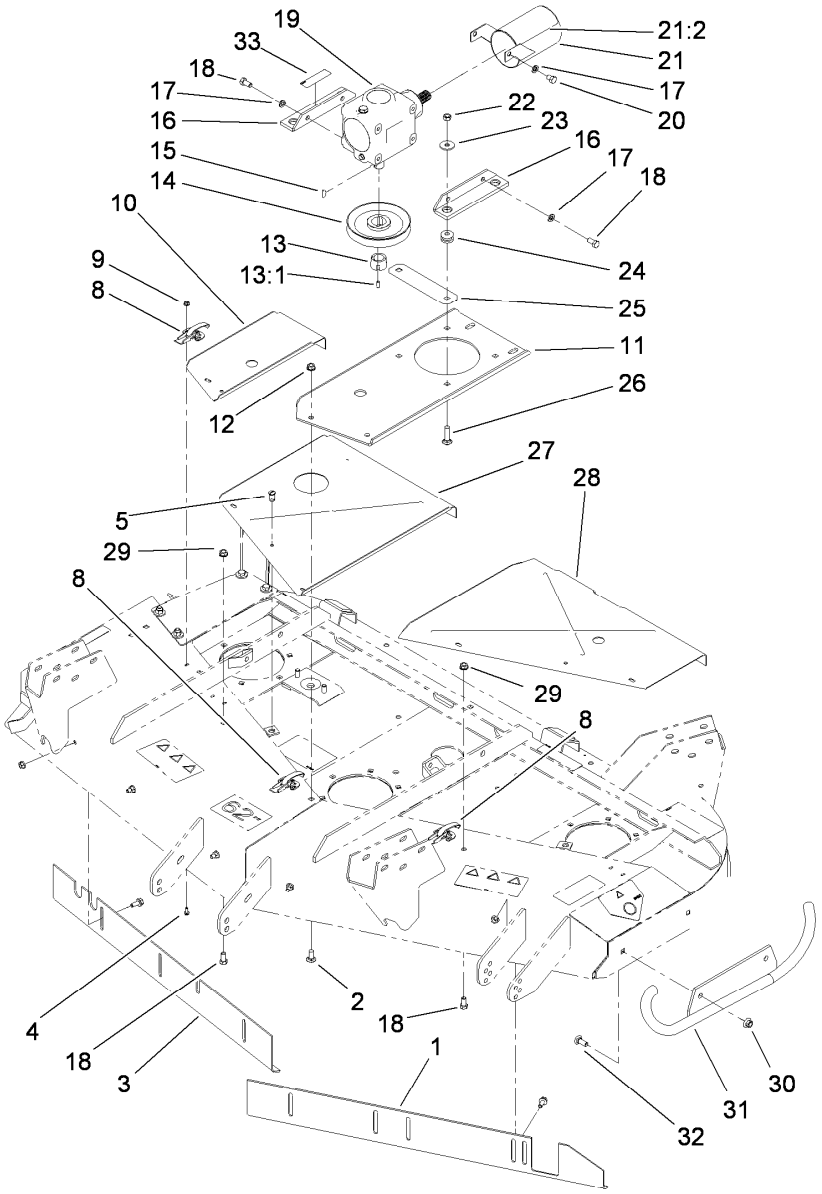

Cover and Gearbox Assembly

Ref.	Part Number	Qty.	Description
1	99-5152-01	1	Baffle-Front, LH
2	3231-27	4	Screw-CARR
3	82-8820-01	1	Baffle-Front, RH
4	3290-321	10	Screw-HWH
5	117-6989	3	Fractional Turn Oval Head Stud ASM
8	249-21	5	Clamp-Slotted
9	32128-17	10	Nut-Lock, Flange
10	119-4754-01	1	Cover-Belt, RH
11	72-9310-01	1	Base-Gearbox
12	3290-357	4	Nut-HHF, Whiz
13	27-6140	1	Bushing-Lock, Taper
13:1	3245-9	2	Screw-Set, HSH
14	63-9900-03	1	Gearbox Pulley ASM
15	3257-5	1	Key-Woodruff
16	68-8560-03	2	Bracket-Gearbox
17	3253-21	6	Washer-Lock

Ref.	Part Number	Qty.	Description
18	323-4	6	Screw-HH
19	131-6083	1	Gearbox ASM
20	323-2	2	Screw-HH
21	107-2904	1	PTO Guard ASM
21:2	107-2915	1	Decal-Danger
22	32153-2	4	Nut-Lock, Side
23	63-8410	4	Washer
24	63-9750	4	Mount
25	68-9890-01	1	Cover-Gearbox, Front
26	3231-26	4	Screw-CARR
27	119-4753-01	1	Cover-Belt, Center
28	119-4752-01	1	Cover-Belt, LH
29	3290-357	2	Nut-HHF, Whiz
30	32128-19	2	Nut-HF
31	99-1252-01	1	Skid ASM
32	3231-22	2	Screw-CARR
33	93-6697	1	Decal-Lube

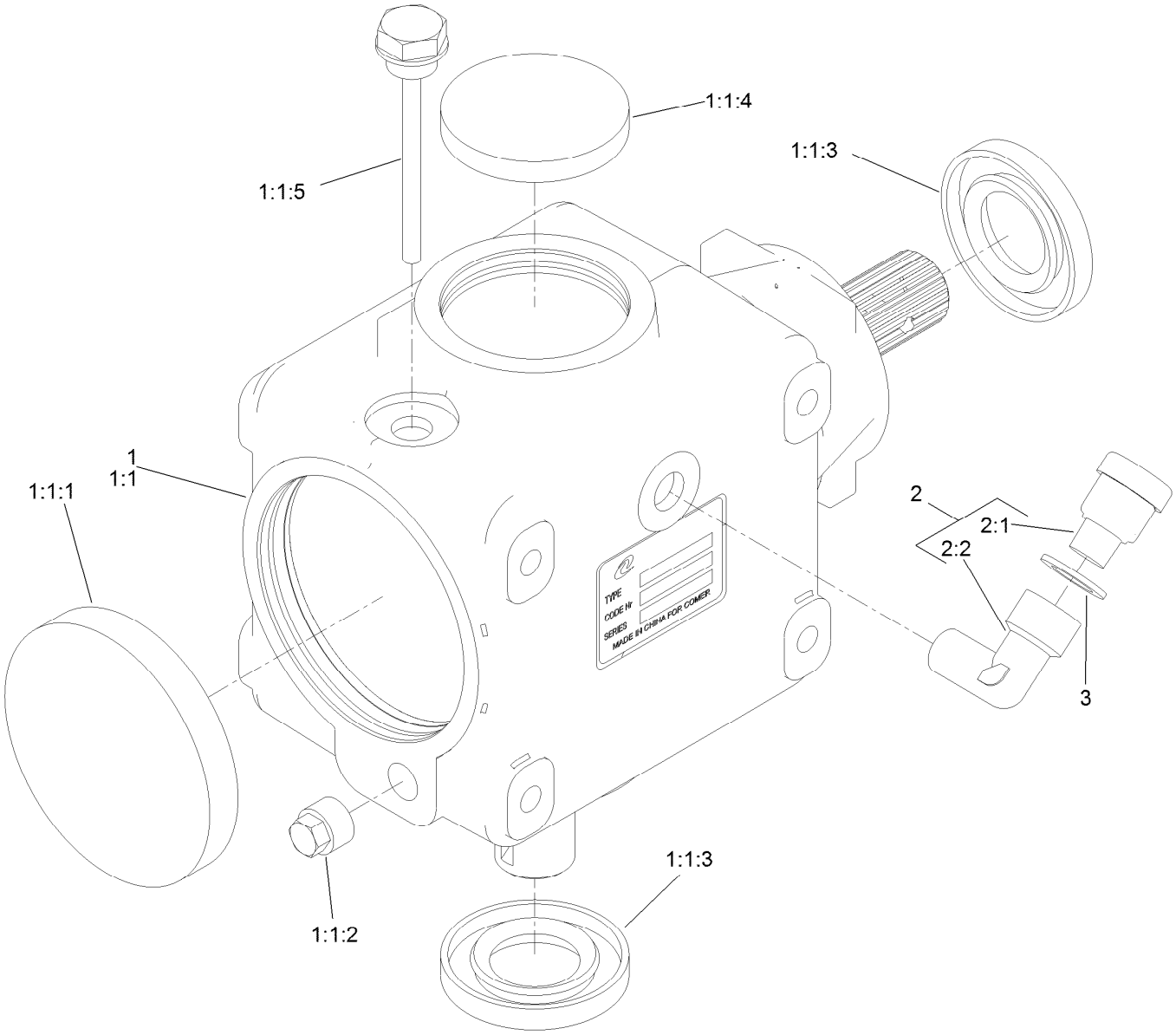

Gearbox Assembly No. 131-6083

Ref.	*Part Number*	*Qty.*	*Description*
1		1	Gearbox ASM ●
1:1		1	Gearbox ASM ●
1:1:1	107-2932	1	Cap-Oil
1:1:2	107-2933	2	Plug
1:1:3	117-9247	2	Seal
1:1:4	107-2935	1	Cap-Oil
1:1:5	110-8283	1	Plug-Filler, Dipstick
2		1	Breather Plug ASM (F/W Gearbox) ●
2:1	131-6920	1	Plug-Breather
2:2	131-6997	1	Elbow-90 DEG
3	130-4899	1	Washer

● Not serviced separately

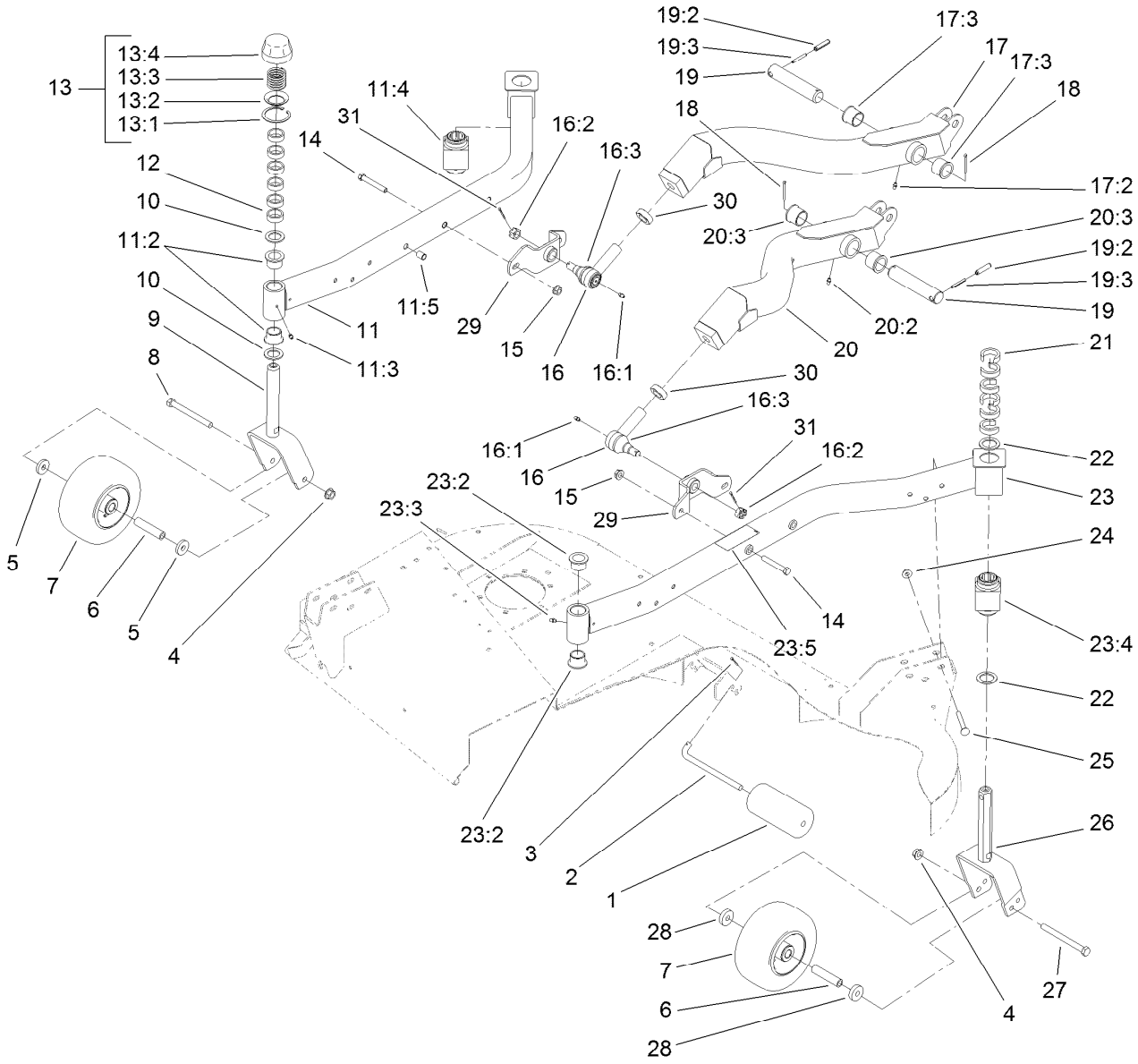

Lift Arm and Caster Arm Assembly

Ref.	Part Number	Qty.	Description
1	36-1740	2	Roller-Deck
2	40-0340	2	Shaft-Roller, Rear
3	3272-11	2	Pin-Cotter
4	32128-23	4	Nut-HF
5	70-8040	4	Washer
6	68-8980	4	Spanner-Tire
7	99-1268	4	Castor Wheel ASM
8	325-19	2	Screw-HH
9	98-7921-01	2	Fork-Castor ASM
10	3-6781	4	Washer-Thrust
11	99-1262	1	RH Castor Arm ASM
11:2	94-1291	2	Bushing
11:3	302-5	1	Fitting-Grease
11:4	93-8471	1	Bushing-Rubber, Square
11:5	3290-469	1	Nut-Clinch
12	63-0070	12	Spacer
13	92-8862	4	HOC Cap ASM
13:1	92-5581	1	Ring-Retaining
13:2	92-5583	1	Washer-Cap
13:3	92-5584	1	Spring-Compression
13:4	92-8861	1	Cap-HOC

Ref.	Part Number	Qty.	Description
14	324-12	4	Screw-HH
15	32128-42	4	Nut-HF
16	86-8100	2	Joint-Ball
16:1	302-5	1	Fitting-Grease
16:2	32136-2	1	Nut-SHH
16:3	114-2874	1	Seal-Ball Joint
17	99-1254	1	RH Lift Arm ASM
17:2	302-5	1	Fitting-Grease
17:3	256-268	2	Bushing
18	3272-19	2	Pin-Cotter
19	98-2330	2	Pivot Pin ASM
19:2	32121-67	1	Pin-Spring
19:3	32121-61	1	Pin-Roll
20	99-1257	1	LH Lift Arm ASM
20:2	302-5	1	Fitting-Grease
20:3	256-268	2	Bushing
21	92-8866	12	Spacer
22	92-1765	4	Washer-Thrust
23	99-1265	1	LH Castor Arm ASM
23:2	94-1291	2	Bushing
23:3	302-5	1	Fitting-Grease

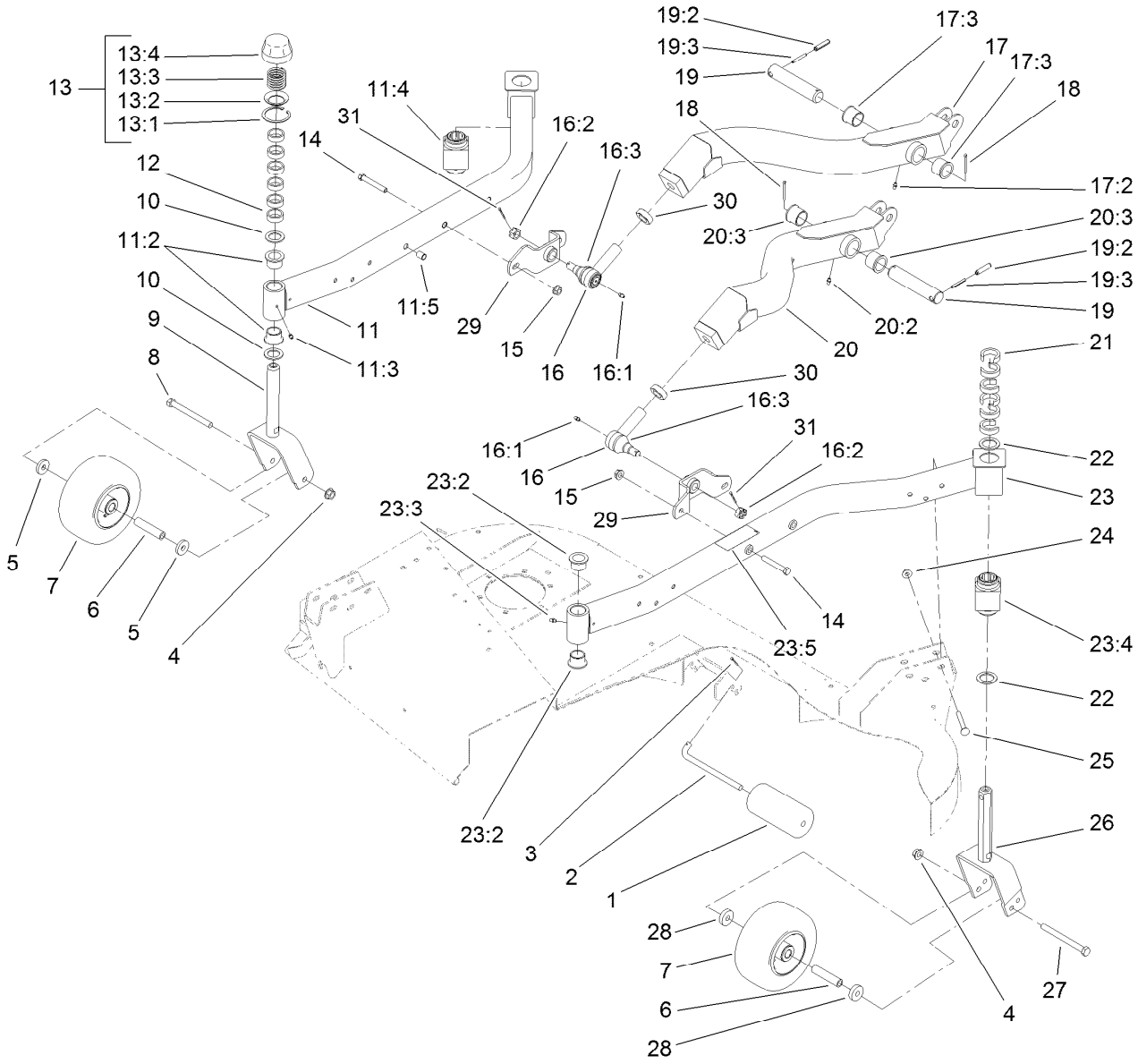

Lift Arm and Caster Arm Assembly (continued)

Ref.	Part Number	Qty.	Description
23:4	93-8471	1	Bushing-Rubber, Square
23:5	92-3035	1	Decal-HOC
24	32128-19	12	Nut-HF
25	3231-10	12	Screw-CARR
26	92-5578-01	2	Fork-Castor, Rear ASM

Ref.	Part Number	Qty.	Description
27	325-22	2	Screw-HH
28	99-1291	4	Spacer
29	98-7944-01	2	Balljoint Mount ASM
30	21-3000	2	Nut-HJ
31	3272-17	2	Pin-Cotter

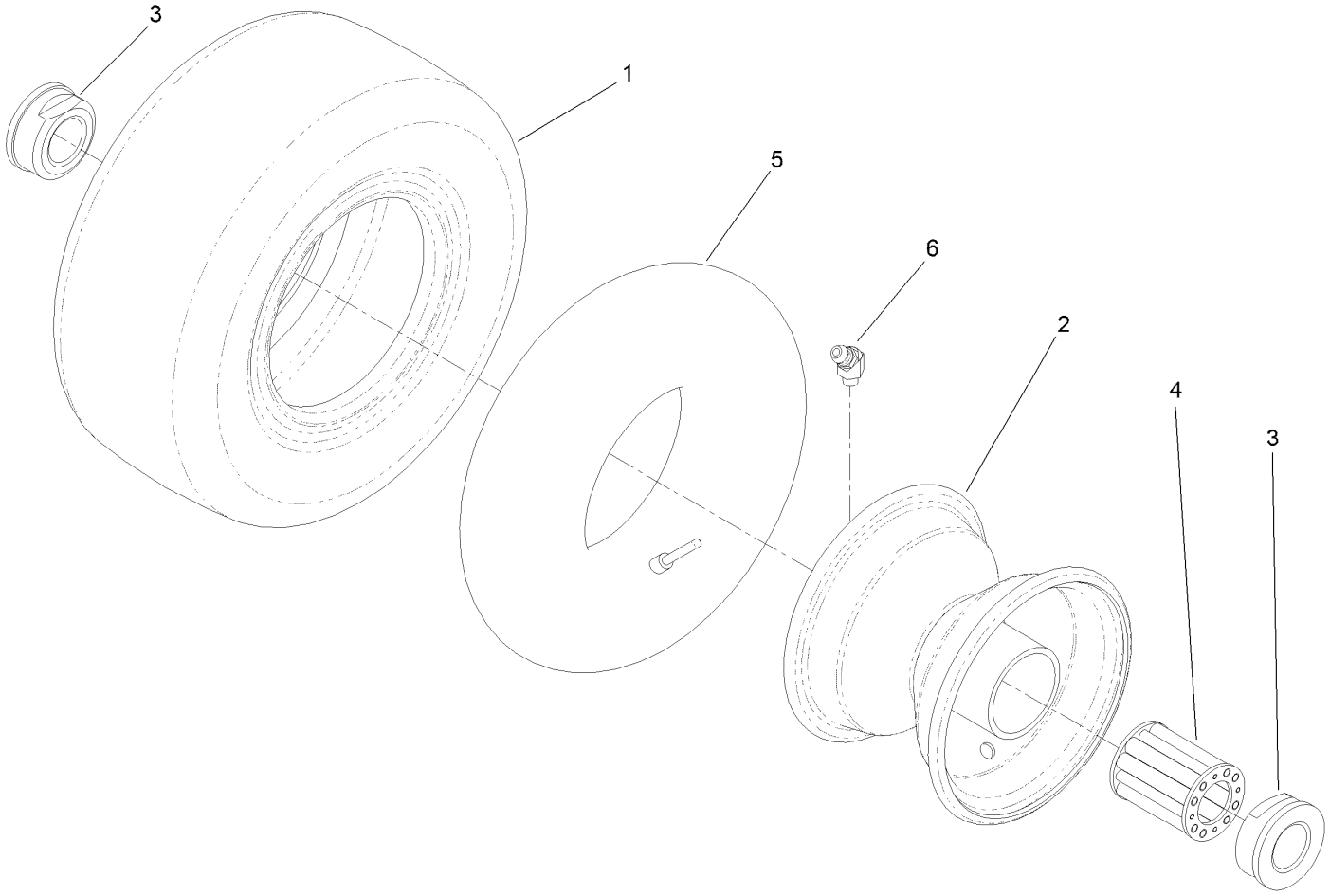

Caster Wheel Assembly No. 99-1268

Ref.	*Part Number*	*Qty.*	*Description*
1	93-9939	1	Tire
2	100-2348	1	Rim ASM
3	62-5580	2	Bearing-Outside
4	62-5570	1	Bearing-Roller
5	100-5832	1	Tube
6	302-11	1	Fitting-Lube, 45 DEG

Attachments and Accessories

For 30551 62in Side Discharge Mower Groundsmaster 200,1000, 3320 and 3280-D Series Traction Unit

Product Name	Model/Part
62in Z Recycler Kit	100-9600
Blade-Atomic	104-1303
Blade Service Pack	106-0631
Castor Wrench	121-3874
Castor Wheel	27-1050
62in and 72in Rotary Mower Striping Kit	30163
62 Inch Blower Kit	30506
Mulcher-Cost, Low	57-0700
Blade-Sail, High	77-6710
Blade and Belt Kit	95-3071
Spindle Kit	95-3079
62in Front Baffle Kit	99-5151

Notes:

Notes:



Count on it.