Form No. 3430-261 Rev A

TORO®

Count on it.

Operator's Manual

323 Compact Tool Carrier

Model No. 22318—Serial No. 404320000 and Up

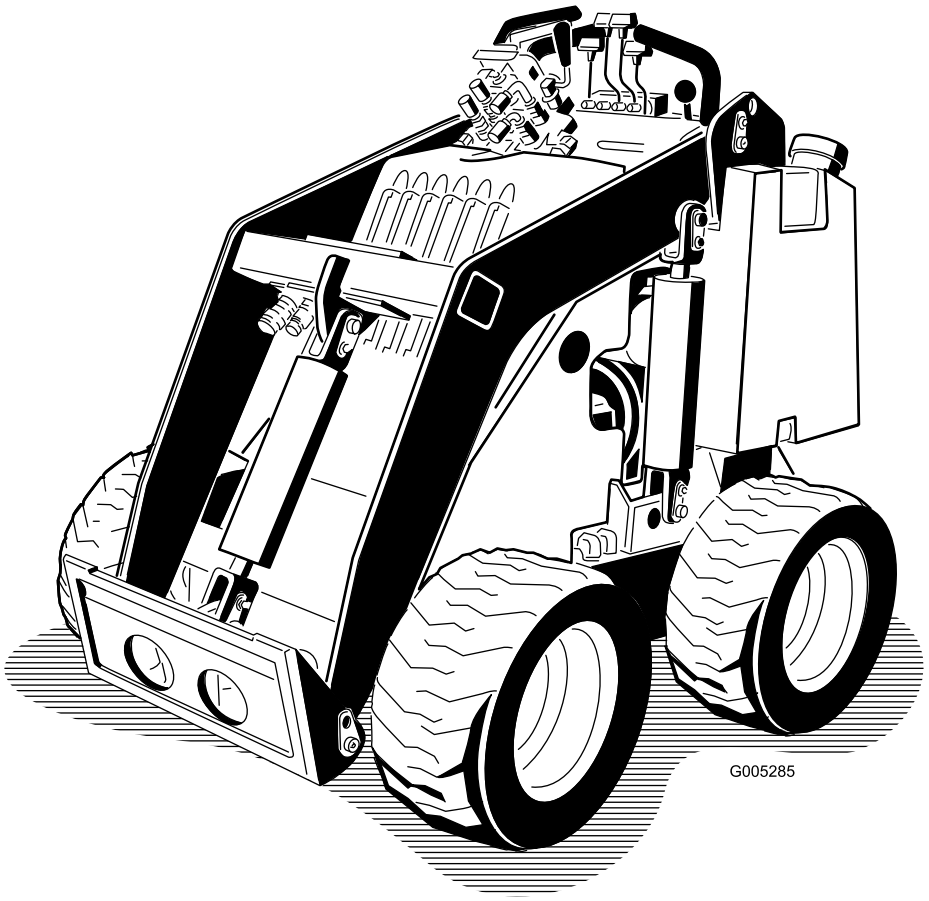

G005285

Register at www.Toro.com.
Original Instructions (EN)

CE

3430-261 A

This product complies with all relevant European directives when CE Kit 22366 has been installed; for details, please see the separate product specific Declaration of Conformity (DOC) sheet.

It is a violation of California Public Resource Code Section 4442 or 4443 to use or operate the engine on any forest-covered, brush-covered, or grass-covered land unless the engine is equipped with a spark arrester, as defined in Section 4442, maintained in effective working order or the engine is constructed, equipped, and maintained for the prevention of fire.

The enclosed engine owner's manual is supplied for information regarding the US Environmental Protection Agency (EPA) and the California Emission Control Regulation of emission systems, maintenance, and warranty. Replacements may be ordered through the engine manufacturer.

⚠ WARNING

CALIFORNIA
Proposition 65 Warning

The engine exhaust from this product contains chemicals known to the State of California to cause cancer, birth defects, or other reproductive harm.

Battery posts, terminals, and related accessories contain lead and lead compounds, chemicals known to the State of California to cause cancer and reproductive harm. Wash hands after handling.

Use of this product may cause exposure to chemicals known to the State of California to cause cancer, birth defects, or other reproductive harm.

Introduction

This machine is a compact tool carrier intended for use in various earth and materials moving activities for landscaping and construction work. It is designed to operate a wide variety of attachments, each of which performs a specialized function. Using this product for purposes other than its intended use could prove dangerous to you and bystanders.

Read this information carefully to learn how to operate and maintain your product properly and to avoid injury and product damage. You are responsible for operating the product properly and safely.

Visit www.Toro.com for product safety and operation training materials, accessory information, help finding a dealer, or to register your product.

Whenever you need service, genuine Toro parts, or additional information, contact an Authorized Service Dealer or Toro Customer Service and have the model and serial numbers of your product ready. Figure 1 identifies the location of the model and serial numbers on the product. Write the numbers in the space provided.

Important: **With your mobile device, you can scan the QR code on the serial number decal (if equipped) to access warranty, parts, and other product information.**

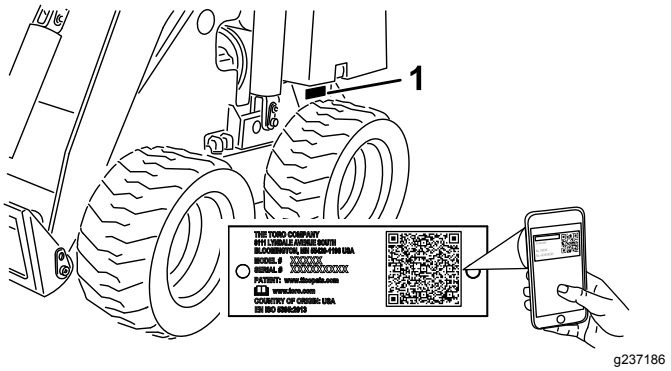

g237186

Figure 1

1. Model and serial number location

Model No. _____

Serial No. _____

This manual identifies potential hazards and has safety messages identified by the safety-alert symbol (Figure 2), which signals a hazard that may cause serious injury or death if you do not follow the recommended precautions.

© 2019—The Toro® Company
8111 Lyndale Avenue South
Bloomington, MN 55420

Contact us at www.Toro.com.
Printed in the USA
All Rights Reserved



g000502

Figure 2
Safety-alert symbol

This manual uses 2 words to highlight information. **Important** calls attention to special mechanical information and **Note** emphasizes general information worthy of special attention.

Contents

Safety 4
General Safety 4
Safety and Instructional Decals 5
Setup 8
Installing the Speed-Selector Lever 8
Checking the Fluid Levels and Tire Pressure 8
Charging the Battery 8
Product Overview 9
Controls 9
Specifications 11
Attachments/Accessories 11
Before Operation 11
Before Operation Safety 11
Adding Fuel 12
Performing Daily Maintenance 13
Adjusting the Thigh Support 13
During Operation 13
During Operation Safety 13
Starting the Engine 15
Driving the Machine 15
Shutting Off the Engine 15
Using Attachments 16
After Operation 17
After Operation Safety 17
Moving a Non-Functioning Machine 17
Hauling the Machine 18
Lifting the Machine 19
Maintenance 20
Maintenance Safety 20
Recommended Maintenance Schedule(s) 20
Pre-Maintenance Procedures 22
Using the Cylinder Locks 22
Accessing Internal Components 22
Lubrication 23
Greasing the Machine 23
Engine Maintenance 24
Engine Safety 24
Servicing the Air Cleaner 24
Servicing the Carbon Canister 25
Servicing the Engine Oil 26
Servicing the Spark Plug(s) 27
Fuel System Maintenance 28
Changing the Fuel Filter 28
Draining the Fuel Tank(s) 29
Electrical System Maintenance 29
Electrical System Safety 29
Servicing the Battery 29
Drive System Maintenance 31
Checking the Tire Pressure 31
Checking the Wheel-Lug Nuts 31
Hydraulic System Maintenance 32
Hydraulic System Safety 32
Relieving Hydraulic Pressure 32
Hydraulic Fluid Specifications 32
Checking the Hydraulic-Fluid Level 33
Replacing the Hydraulic Filter 33
Changing the Hydraulic Fluid 34
Cleaning 34
Removing Debris 34
Storage 35
Storage Safety 35
Storage 35
Troubleshooting 36
Schematics 38

Safety

⚠ DANGER

There may be buried utility lines in the work area. Digging into them may cause a shock or an explosion.

Have the property or work area marked for buried lines and do not dig in marked areas. Contact your local marking service or utility company to have the property marked (for example, in the US, call 811 or in Australia, call 1100 for the nationwide marking service).

General Safety

Always follow all safety instructions to avoid serious injury or death.

- Do not carry a load with the arms raised; always carry loads close to the ground.
- Slopes are a major factor related to loss-of-control and tip-over accidents, which can result in severe injury or death. Operating the machine on any slope or uneven terrain requires extra caution.
- Operate the machine up and down slopes with the heavy end of the machine uphill and the load close to the ground. Weight distribution changes with attachments. An empty bucket makes the rear of the machine the heavy end, and a full bucket makes the front of the machine the heavy end. Most other attachments make the front of the machine the heavy end.
- Have the property or work area marked for buried lines and other objects, and do not dig in marked areas.
- Read and understand the content of this *Operator's Manual* before starting the engine.
- Use your full attention while operating the machine. Do not engage in any activity that causes distractions; otherwise, injury or property damage may occur.
- Never allow children or untrained people to operate the machine.
- Keep your hands and feet away from the moving components and attachments.
- Do not operate the machine without the guards and other safety protective devices in place and working on the machine.
- Keep bystanders and children out of the operating area.
- Stop the machine, shut off the engine, and remove the key before servicing, fueling, or unclogging the machine.

Improperly using or maintaining this machine can result in injury. To reduce the potential for injury, comply with these safety instructions and always pay attention to the safety-alert symbol ⚠, which means Caution, Warning, or Danger—personal safety instruction. Failure to comply with these instructions may result in personal injury or death.

Safety and Instructional Decals

Safety decals and instructions are easily visible to the operator and are located near any area of potential danger. Replace any decal that is damaged or missing.



decalbatterysymbols

Battery Symbols

Some or all of these symbols are on your battery.

1. Explosion hazard
2. No fire, open flame, or smoking
3. Caustic liquid/chemical burn hazard
4. Wear eye protection.
5. Read the *Operator's Manual*.
6. Keep bystanders away from the battery.
7. Wear eye protection; explosive gases can cause blindness and other injuries.
8. Battery acid can cause blindness or severe burns.
9. Flush eyes immediately with water and get medical help fast.
10. Contains lead; do not discard

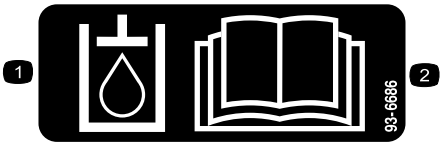

decal93-6686

93-6686

1. Hydraulic fluid
2. Read the *Operator's Manual.*

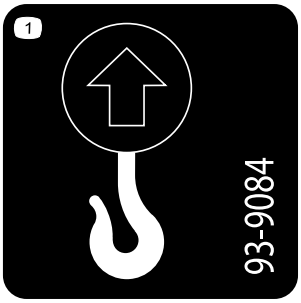

decal93-9084

93-9084

1. Lift point/Tie-down point

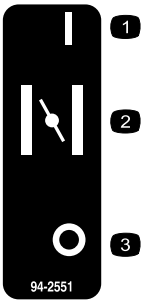

decal94-2551

94-2551

1. On
2. Choke
3. Off



decal98-4387

98-4387

1. Warning—wear hearing protection.

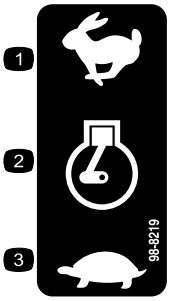

decal98-8219

98-8219

1. Fast
2. Throttle
3. Slow



decal104-6108

104-6108

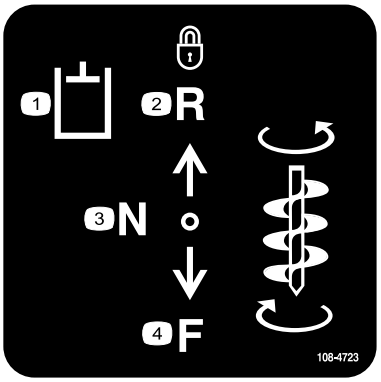

decal108-4723

108-4723

1. Auxiliary hydraulics
2. Locked reverse (detent)
3. Neutral (off)
4. Forward

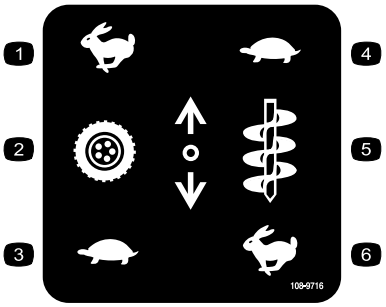

decal108-9716

108-9716

1. Fast
2. Traction drive
3. Slow
4. Slow
5. Attachment speed
6. Fast



decal130-2837

130-2837

1. Warning—do not carry passengers in the bucket.



decal133-8062

133-8062

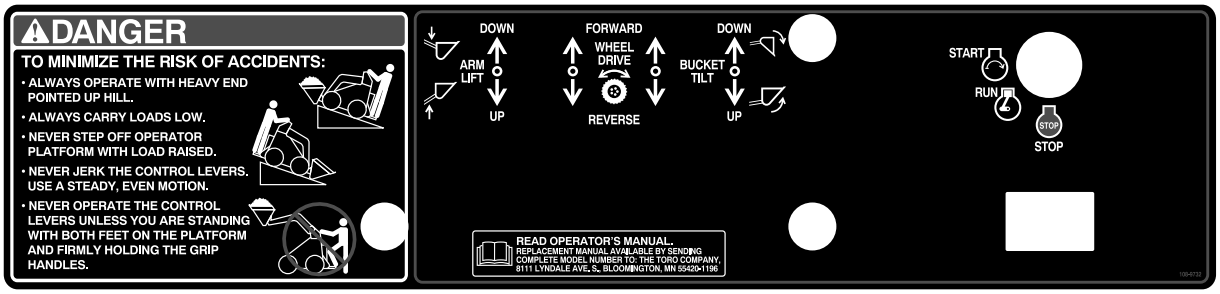

decal108-9732

108-9732

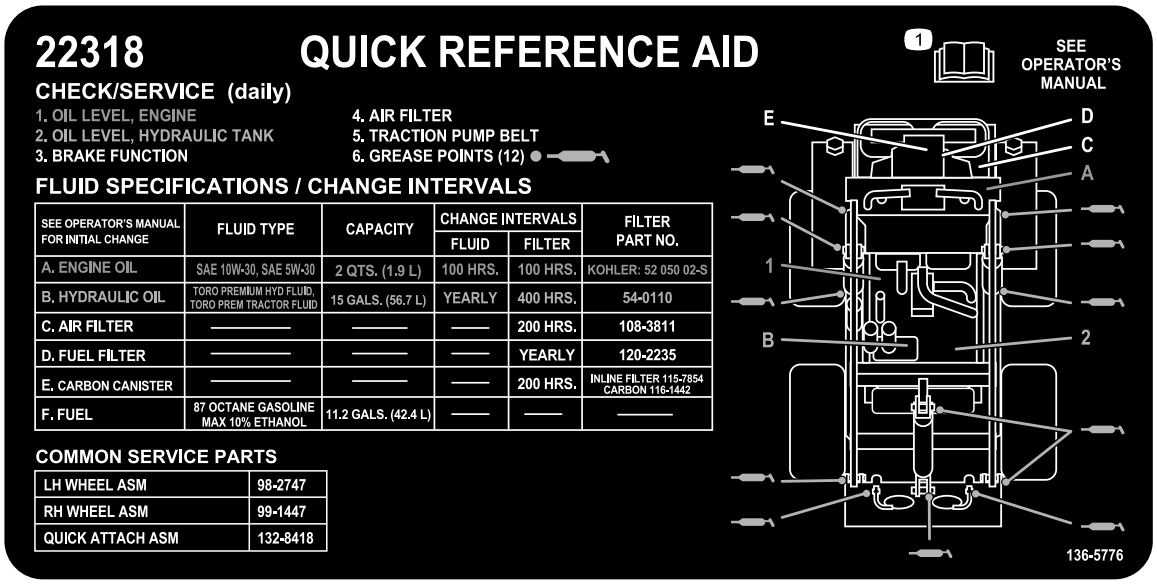

decal136-5776

136-5776

1. Read the *Operator's Manual* for more information on servicing the machine.

Setup

Installing the Speed-Selector Lever

1. Remove and discard the nut securing the bolt and lock washer to the speed-selector lever.
2. Secure the lever to the speed-selector valve using the bolt, lock washer, and nut as illustrated in Figure 3.

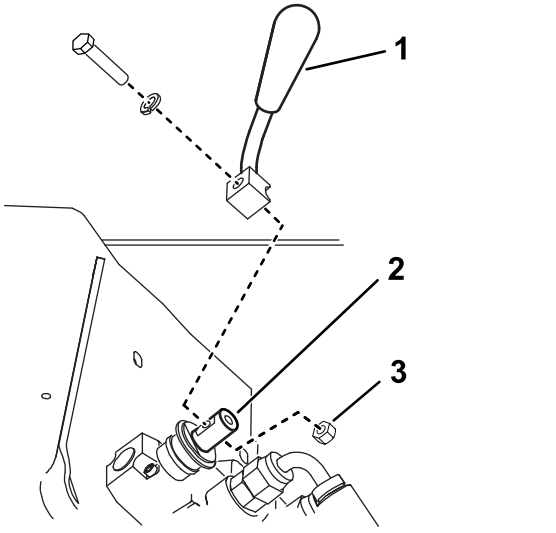

Figure 3

1. Speed-selector lever
2. Speed-selector valve
3. Nut

Checking the Fluid Levels and Tire Pressure

Before starting the engine for the first time, check the engine-oil level, hydraulic-fluid level, and the tire pressure. Refer to the following sections for more information:

- Checking the Engine-Oil Level (page 26)
- Checking the Hydraulic-Fluid Level (page 33)
- Checking the Tire Pressure (page 31)

Charging the Battery

Charge and install the battery; refer to Charging the Battery (page 30).

Product Overview

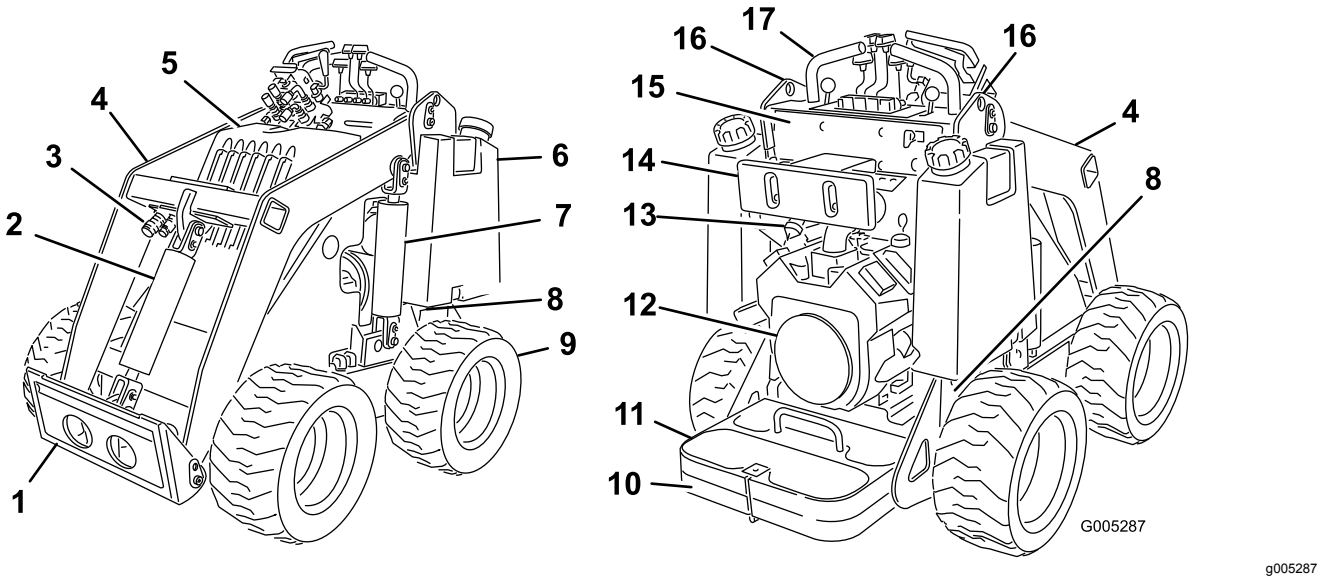

Figure 4

1. Mount plate
2. Tilt cylinder
3. Auxiliary hydraulic couplers
4. Loader arms
5. Hood
6. Fuel tank
7. Lift cylinder
8. Tow valve
9. Wheel
10. Operator platform
11. Counterweight
12. Engine
13. Air cleaner
14. Thigh support
15. Control panel
16. Lift points
17. Handle

Controls

Control Panel

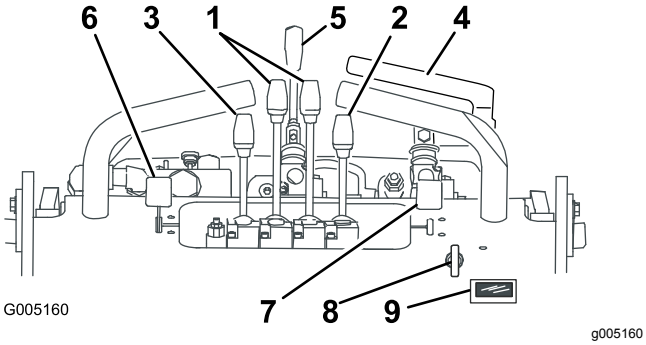

Figure 5

1. Traction-control levers
2. Attachment-tilt lever
3. Loader-arm lever
4. Auxiliary-hydraulics lever
5. Speed-selector lever
6. Throttle lever
7. Choke lever
8. Key switch
9. Hour meter/tachometer

Key Switch

The key switch, used to start and shut off the engine, has 3 positions: OFF, RUN, and START. Refer to Starting the Engine (page 15).

Throttle Lever

Move the control forward to increase the engine speed and rearward to decrease speed.

Choke Lever

Before starting a cold engine, move the choke lever forward. After the engine starts, regulate the choke to keep the engine running smoothly. As soon as possible, move the choke lever all the way rearward.

Note: A warm engine requires little or no choking.

Traction-Control Levers

- To move forward, move the traction-control levers forward.
- To move rearward, move the traction-control levers rearward.
- To turn, move the lever located on the side you want to turn back toward the NEUTRAL position while keeping the other lever engaged.

  Note: The farther you move the traction-control levers in either direction, the faster the machine moves in that direction.
- To slow or stop, move the traction-control levers to the NEUTRAL position.

Attachment-Tilt Lever

- To tilt the attachment forward, slowly push the attachment-tilt lever forward.
- To tilt the attachment rearward, slowly pull the attachment-tilt lever rearward.

Loader-Arm Lever

- To lower the loader arms, slowly push the loader-arm lever forward.
- To raise the loader arms, slowly pull the loader-arm lever rearward.

Auxiliary-Hydraulics Lever

- To operate a hydraulic attachment in the forward direction, slowly pull the auxiliary-hydraulics lever upward and then rearward.
- To operate a hydraulic attachment in the reverse direction, slowly pull the auxiliary-hydraulics lever upward and then push it forward. This is also called the DETENT position because it does not require operator presence.

Speed-Selector Lever

- To set the traction drive, loader arms, and attachment tilt to high speed and the auxiliary hydraulics to low speed, move the speed-selector lever to the FORWARD position.
- To set the auxiliary hydraulics to high speed and the traction drive, loader arms, and attachment tilt to low speed, move the speed-selector lever to the REARWARD position.

⚠ WARNING

If you move the speed-selector lever while the machine is in motion, the machine will either stop suddenly or accelerate quickly. If you operate the machine with the speed-selector lever in an intermediate position, the machine will operate erratically and may be damaged. You could lose control of the machine and injure bystanders or yourself.

- **Do not move the speed-selector lever when the machine is in motion.**
- **Do not operate the machine when the speed selector is in any intermediate position (i.e., any position other than fully forward or fully rearward).**

Hour Meter/Tachometer

When the engine is off, the hour meter/tachometer displays the number of hours of operation logged on the machine. When the engine is running, it displays the speed of the engine in revolutions per minute (rpm).

After 50 hours and then every 100 hours thereafter (i.e., 150, 250, 350, etc.) the screen displays CHG OIL to remind you to change the engine oil.

After every 100 hours, the screen displays SVC to remind you to perform the other maintenance procedures based on a 100-, 200-, or 400-hour schedule.

Note: These reminders appear 3 hours prior to the service interval time and flash at regular intervals for 6 hours.

Specifications

Note: Specifications and design are subject to change without notice.

Width	103 cm (40.5 inches)
Length	152 cm (60 inches)
Height	125 cm (49 inches)
Weight (without attachment or counterweight)	745 kg (1,642 lb)
Weight of the counterweight	75 kg (165 lb)
Operating capacity—with 74.8 kg (165 lb) operator, the standard bucket, and without the counterweight	227 kg (500 lb)
Tipping capacity—with 74.8 kg (165 lb) operator, the standard bucket, and without the counterweight	454 kg (1,000 lb)
Wheelbase	71 cm (28 inches)
Dump height (with standard bucket)	120 cm (47 inches)
Reach—fully raised (with standard bucket)	66 cm (26 inches)
Height to hinge pin (narrow bucket in standard position)	168 cm (66 inches)

Attachments/Accessories

A selection of Toro approved attachments and accessories is available for use with the machine to enhance and expand its capabilities. Contact your Authorized Service Dealer or authorized Toro distributor or go to www.Toro.com for a list of all approved attachments and accessories.

To ensure optimum performance and continued safety certification of the machine, use only genuine Toro replacement parts and accessories. Replacement parts and accessories made by other manufacturers could be dangerous, and such use could void the product warranty.

Operation

Note: Determine the left and right sides of the machine from the normal operating position.

Before Operation

Before Operation Safety

General Safety

- Never allow children or untrained people to operate or service the machine. Local regulations may restrict the age or require certified training of the operator. The owner is responsible for training all operators and mechanics.
- Become familiar with the safe operation of the equipment, operator controls, and safety decals.
- Always engage the parking brake (if equipped), shut off the engine, remove the key, wait for all moving parts to stop, and allow the machine to cool before adjusting, servicing, cleaning, or storing the machine.
- Know how to stop the machine and shut off the engine quickly.
- Check that the operator's presence controls, safety switches, and shields are attached and functioning properly. Do not operate the machine unless they are functioning properly.
- Locate the pinch-point areas marked on the machine and attachments; keep your hands and feet away from these areas.
- Before operating the machine with an attachment, ensure that the attachment is properly installed and that it is a genuine Toro attachment. Read all the attachment manuals.
- Evaluate the terrain to determine what accessories and attachments you need to properly and safely perform the job.
- Have the property or work area marked for buried lines and other objects, and do not dig in marked areas; note the location of unmarked objects and structures, such as underground storage tanks, wells, and septic systems.
- Inspect the area where you will use the equipment and remove all debris.
- Ensure that the area is clear of bystanders before operating the machine. Stop the machine if anyone enters the area.

Fuel Safety

- Use extra care when handling fuel. It is flammable and its vapors are explosive.
- Extinguish all cigarettes, cigars, pipes, and other sources of ignition.
- Use only an approved fuel container.
- Do not remove the fuel cap or fill the fuel tank while the engine is running or hot.
- Do not add or drain fuel in an enclosed space.
- Do not store the machine or fuel container where there is an open flame, spark, or pilot light, such as on a water heater or other appliance.
- If you spill fuel, do not attempt to start the engine; avoid creating any source of ignition until the fuel vapors have dissipated.
- Do not fill containers inside a vehicle or on a truck or trailer bed with a plastic liner. Always place containers on the ground, away from your vehicle before filling.
- Remove the equipment from the truck or trailer and refuel it while it is on the ground. If this is not possible, then refuel from a portable container rather than a fuel-dispenser nozzle.
- Keep the fuel-dispenser nozzle in contact with the rim of the fuel tank or container opening at all times until fueling is complete. Do not use a nozzle lock-open device.

Adding Fuel

Recommended Fuel

- For best results, use only clean, fresh (less than 30 days old), unleaded gasoline with an octane rating of 87 or higher ((R+M)/2 rating method).
- **Ethanol**: Gasoline with up to 10% ethanol (gasohol) or 15% MTBE (methyl tertiary butyl ether) by volume is acceptable. Ethanol and MTBE are not the same. Gasoline with 15% ethanol (E15) by volume is not approved for use. **Never use gasoline that contains more than 10% ethanol by volume**, such as E15 (contains 15% ethanol), E20 (contains 20% ethanol), or E85 (contains up to 85% ethanol). Using unapproved gasoline may cause performance problems and/or engine damage which may not be covered under warranty.
- **Do not** use gasoline containing methanol.
- **Do not** store fuel either in the fuel tank or fuel containers over the winter unless you use a fuel stabilizer.
- **Do not** add oil to gasoline.

Using Stabilizer/Conditioner

Use fuel stabilizer/conditioner in the machine to keep the fuel fresh longer when used as directed by the fuel-stabilizer manufacturer.

Important: **Do not use fuel additives containing methanol or ethanol.**

Add the amount of fuel stabilizer/conditioner to fresh fuel as directed by the fuel-stabilizer manufacturer.

Filling the Fuel Tank(s)

1. Park the machine on a level surface, engage the parking brake (if equipped), and lower the loader arms.
2. Shut off the engine, remove the key, and allow the engine to cool.
3. Clean around the fuel-tank cap and remove it (Figure 6).

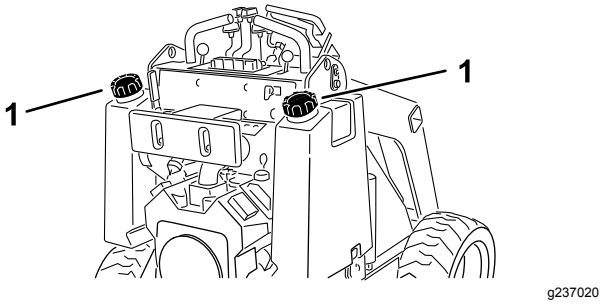

Figure 6

1. Fuel-tank cap

4. Add fuel to the tank until the level is 6 to 13 mm (1/4 to 1/2 inch) below the bottom of the filler neck.

   Important: **This space in the tank allows fuel to expand. Do not fill the fuel tank completely full.**

5. Install the fuel-tank cap securely, turning it until it clicks.
6. Wipe up any spilled fuel.

Performing Daily Maintenance

Before starting the machine each day, perform the Each Use/Daily procedures listed in the Maintenance (page 20).

Important: **Check the hydraulic-fluid level before starting the engine for the first time; refer to Checking the Hydraulic-Fluid Level (page 33).**

Adjusting the Thigh Support

To adjust the thigh support (Figure 7), loosen the knobs and raise or lower the support pad to the desired height. You can also obtain additional adjustment by loosening the nut securing the pad to the adjustment plate and moving the plate up or down as needed. Tighten all fasteners securely when finished.

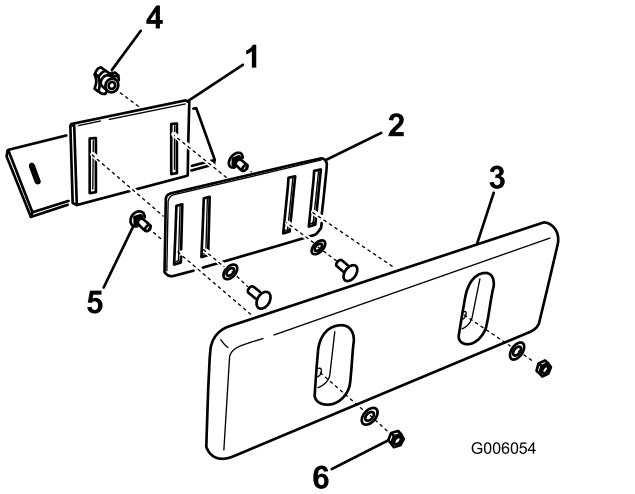

Figure 7

1. Thigh-support bracket
2. Adjustment plate
3. Thigh-support pad
4. Knob and flat washer
5. Carriage bolt
6. Locknut and flat washer

During Operation

During Operation Safety

General Safety

- Do not carry a load with the arms raised. Always carry loads close to the ground.
- Do not exceed the rated operating capacity, as the machine may become unstable, which may result in loss of control.
- Use only Toro-approved attachments and accessories. Attachments can change the stability and the operating characteristics of the machine.
- For machines with a platform:
  - Lower the loader arms before stepping off the platform.
  - Do not try to stabilize the machine by putting your foot on the ground. If you lose control of the machine, step off the platform and away from the machine.
  - Do not place your feet under the platform.

  - Do not move the machine unless you are standing with both feet on the platform and your hands are holding onto the reference bars.
- Use your full attention while operating the machine. Do not engage in any activity that causes distractions; otherwise, injury or property damage may occur.
- Look behind and down before backing up to ensure that the path is clear.
- Never jerk the controls; use a steady motion.
- The owner/user can prevent and is responsible for accidents that may cause personal injury or property damage.
- Wear appropriate clothing including gloves, eye protection, long pants, substantial slip-resistant footwear, and hearing protection. Tie back long hair and do not wear loose clothing or loose jewelry.
- Do not operate the machine when you are tired, ill, or under the influence of alcohol or drugs.
- Never carry passengers and keep pets and bystanders away from the machine
- Operate the machine only in good light, keeping away from holes and hidden hazards.
- Ensure that all the drives are in neutral and engage the parking brake (if equipped) before starting the engine. Start the engine only from the operator's position.
- Use care when approaching blind corners, shrubs, trees, or other objects that may obscure vision.
- Slow down and use caution when making turns and crossing roads and sidewalks. Watch for traffic.
- Stop the attachment when you are not working.
- Stop the machine, turn off the engine, remove the key, and inspect the machine if you strike an object. Make any necessary repairs before resuming operation.
- Never run an engine in an enclosed area.
- Never leave a running machine unattended.
- Before leaving the operating position, do the following:
  - Park the machine on a level surface.
  - Lower the loader arms and disengage the auxiliary hydraulics.
  - Engage the parking brake (if equipped).
  - Shut off the engine and remove the key.
- Do not operate the machine when there is the risk of lightning.
- Operate the machine only in areas where there is sufficient clearance for you to safely maneuver. Be aware of obstacles in close proximity to you. Failure to maintain adequate distance from trees, walls, and other barriers may result in injury as the machine backs up during operation if you are not attentive to the surroundings.
- Check for overhead clearance (i.e., electrical wires, branches, and doorways) before driving under any objects and do not contact them.
- Do not overfill the attachment and always keep the load level when raising the loader arms. Items in the attachment could fall and cause injury.

Slope Safety

- **Operate the machine up and down slopes with the heavy end of the machine uphill.** Weight distribution changes with attachments. An empty bucket makes the rear of the machine the heavy end, and a full bucket makes the front of the machine the heavy end. Most other attachments make the front of machine the heavy end.
- Raising the loader arms on a slope affects the stability of the machine. Keep the loader arms in the lowered position when on slopes.
- Slopes are a major factor related to loss of control and tip-over accidents, which can result in severe injury or death. Operating the machine on any slope or uneven terrain requires extra caution.
- Establish your own procedures and rules for operating on slopes. These procedures must include surveying the site to determine which slopes are safe for machine operation. Always use common sense and good judgment when performing this survey.
- Slow down and use extra care on hillsides. Ground conditions can affect the stability of the machine.
- Avoid starting or stopping on a slope. If the machine loses traction, proceed slowly, straight down the slope.
- Avoid turning on slopes. If you must turn, turn slowly and keep the heavy end of the machine uphill.
- Keep all movements on slopes slow and gradual. Do not make sudden changes in speed or direction.
- If you feel uneasy operating the machine on a slope, do not do it.
- Watch for holes, ruts, or bumps, as uneven terrain could overturn the machine. Tall grass can hide obstacles.
- Use caution when operating on wet surfaces. Reduced traction could cause sliding.
- Evaluate the area to ensure that the ground is stable enough to support the machine.
- Use caution when operating the machine near the following:
  - Drop-offs

– Ditches
– Embankments
– Bodies of water

The machine could suddenly roll over if a track goes over the edge or the edge caves in. Maintain a safe distance between the machine and any hazard.

- Do not remove or add attachments on a slope.
- Do not park the machine on a hillside or slope.

Starting the Engine

1. Stand on the platform (if equipped on your machine).
2. Ensure that the auxiliary hydraulics lever is in the NEUTRAL position.
3. Move the choke lever fully forward if you are starting a cold engine.

   Note: A warm or hot engine may not require choking.
4. Move the throttle lever midway between the SLOW and FAST positions.
5. Insert the key into the key switch and turn it to the START position. When the engines starts, release the key.

   Important: **Do not engage the starter for more than 10 seconds at a time. If the engine fails to start, wait 30 seconds for the starter to cool down between attempts. Failure to follow these instructions could burn out the starter motor.**
6. After the engine starts, gradually move the choke lever back to the OFF position. If the engine stalls or hesitates, move the choke forward again until the engine warms up.
7. Move the throttle lever to the desired setting.

   Important: **Running the engine at high speeds when the hydraulic system is cold (i.e., when the air temperature is at or below freezing) could damage the hydraulic system. When starting the engine in cold conditions, allow it to run in the middle throttle position for 2 to 5 minutes before moving the throttle to the FAST position.**

   Note: If the outdoor temperature is below freezing, store the machine in a garage to keep it warmer and to aid in starting.

Driving the Machine

Use the traction controls to move the machine. The farther you move the traction controls in any direction, the faster the machine moves in that direction. Release the traction controls to stop the machine.

The throttle control regulates the engine speed as measured in rpm (revolutions per minute). Place the throttle lever in the FAST position for best performance. You can, however, use the throttle position to operate at slower speeds.

Shutting Off the Engine

1. Park the machine on a level surface, engage the parking brake (if equipped), and lower the loader arms.
2. Ensure that the auxiliary hydraulics lever is in the NEUTRAL position.
3. Move the throttle lever 3/4 of the way to the FAST position.

   Note: If you set the throttle lower than halfway to the FAST position, the engine may continue to run for 1 second after turning the key to the OFF position, preventing a loud after-fire bang.
4. If the engine has been working hard or is hot, let it idle for a minute before turning the key switch to the OFF position.

   Note: This helps to cool the engine before you shut it off. In an emergency, you can shut off the engine immediately.
5. Turn the key switch to the OFF position and remove the key.

⚠ CAUTION

Children or bystanders may be injured if they move or attempt to operate the machine while it is unattended.

Always remove the key and engage the parking brake when leaving the machine unattended.

Using Attachments

Installing an Attachment

Important: **Use only Toro-approved attachments. Attachments can change the stability and the operating characteristics of the machine. The warranty of the machine may be voided if you use the machine with unapproved attachments.**

Important: **Before installing the attachment, ensure that the mount plates are free of any dirt or debris and that the pins rotate freely. If the pins do not rotate freely, grease them.**

1. Position the attachment on a level surface with enough space behind it to accommodate the machine.
2. Start the engine.
3. Tilt the attachment mount plate forward.
4. Position the mount plate into the upper lip of the attachment receiver plate (Figure 8).

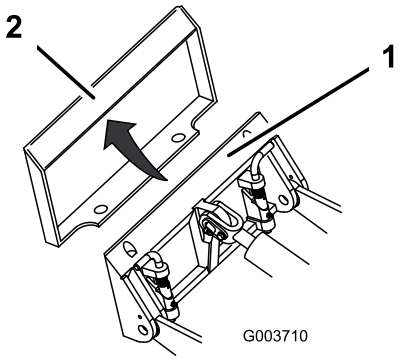

g003710

Figure 8

1. Mount plate
2. Receiver plate

5. Raise the loader arms while tilting back the mount plate at the same time.

   Important: **Raise the attachment enough to clear the ground and tilt the mount plate all the way back.**

6. Shut off the engine and remove the key.
7. Engage the quick-attach pins, ensuring that they are fully seated in the mount plate (Figure 9).

   Important: **If the pins do not rotate to the engaged position, the mount plate is not fully aligned with the holes in the attachment receiver plate. Check the receiver plate and clean it if necessary.**

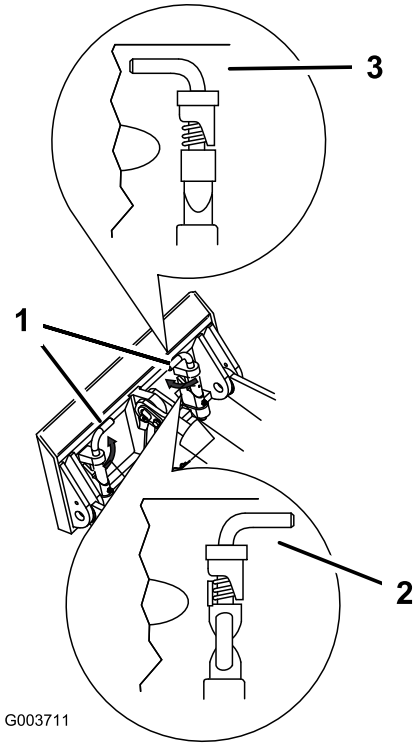

g003711

Figure 9

1. Quick-attach pins (engaged position)
2. Disengaged position
3. Engaged position

⚠ WARNING

If you do not fully seat the quick-attach pins through the attachment mount plate, the attachment could fall off the machine, crushing you or bystanders.

Ensure that the quick-attach pins are fully seated in the attachment mount plate.

Connecting the Hydraulic Hoses

⚠ WARNING

Hydraulic fluid escaping under pressure can penetrate skin and cause injury. Fluid injected into the skin must be surgically removed within a few hours by a doctor familiar with this form of injury; otherwise, gangrene may result.

- **Ensure that all hydraulic-fluid hoses and lines are in good condition and all hydraulic connections and fittings are tight before applying pressure to the hydraulic system.**
- **Keep your body and hands away from pinhole leaks or nozzles that eject high-pressure hydraulic fluid.**
- **Use cardboard or paper to find hydraulic leaks; never use your hands.**

⚠ CAUTION

Hydraulic couplers, hydraulic lines/valves, and hydraulic fluid may be hot. If you contact hot components, you may be burned.

- **Wear gloves when operating the hydraulic couplers.**
- **Allow the machine to cool before touching hydraulic components.**
- **Do not touch hydraulic fluid spills.**

If the attachment requires hydraulics for operation, connect the hydraulic hoses as follows:

1. Shut off the engine and remove the key.
2. Move the auxiliary-hydraulics lever forward, backward, and back to the NEUTRAL position to relieve pressure at the hydraulic couplers.
3. Remove the protective covers from the hydraulic connectors on the machine.
4. Ensure that all foreign matter is cleaned from the hydraulic connectors.
5. Push the attachment male connector into the female connector on the machine.

   Note: When you connect the attachment male connector first, you relieve any pressure built up in the attachment.
6. Push the attachment female connector onto the male connector on the machine.
7. Confirm that the connection is secure by pulling on the hoses.

Removing an Attachment

1. Park the machine on a level surface.
2. Lower the attachment to the ground.
3. Shut off the engine and remove the key.
4. Disengage the quick-attach pins by turning them to the outside.
5. If the attachment uses hydraulics, move the auxiliary-hydraulics lever forward, backward, and back to the NEUTRAL position to relieve pressure at the hydraulic couplers.
6. If the attachment uses hydraulics, slide the collars back on the hydraulic couplers and disconnect them.

   Important: **Connect the attachment hoses together to prevent hydraulic system contamination during storage.**
7. Install the protective covers onto the hydraulic couplers on the machine.
8. Start the engine, tilt the mount plate forward, and back the machine away from the attachment.

After Operation

After Operation Safety

- Shut off the engine, remove the key, wait for all movement to stop, and allow the machine to cool before adjusting, cleaning, storing, or servicing it.
- Clean debris from the attachments, drives, mufflers, and engine to help prevent fires. Clean up oil or fuel spills.
- Keep all parts in good working condition and all hardware tightened.
- Do not touch parts that may be hot from operation. Allow them to cool before attempting to maintain, adjust, or service the machine.
- Use care when loading or unloading the machine into a trailer or truck.

Moving a Non-Functioning Machine

Important: **Do not tow or pull the machine without first opening the tow valves, or you will damage the hydraulic system.**

1. Shut off the engine and remove the key.
2. Remove the plug covering each tow valve (Figure 10).

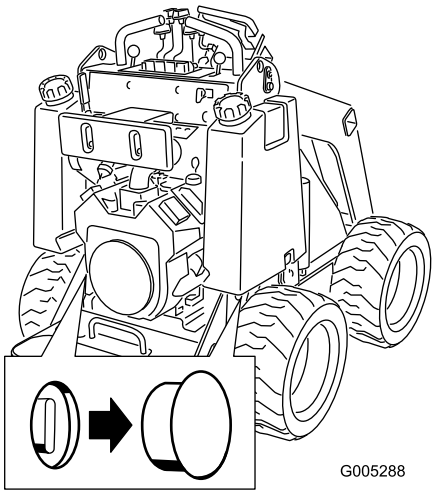

g005288

Figure 10

3. Loosen the jam nut on each tow valve.
4. Turn each valve counterclockwise 1 turn with a hex wrench to open them.
5. Tow the machine as required.

   Important: **Do not exceed 4.8 km/h (3 mph) when towing.**
6. After repairing the machine, close the tow valves and tighten the jam nuts.

   Important: **Do not overtighten the tow valves.**
7. Replace the plugs.

Hauling the Machine

Use a heavy-duty trailer or truck to haul the machine. Use a full-width ramp. Ensure that the trailer or truck has all the necessary brakes, lighting, and marking as required by law. Please carefully read all the safety instructions. Knowing this information could help you or bystanders avoid injury. Refer to your local ordinances for trailer and tie-down requirements.

⚠ WARNING

Driving on the street or roadway without turn signals, lights, reflective markings, or a slow-moving-vehicle emblem is dangerous and can lead to accidents causing personal injury.

Do not drive the machine on a public street or roadway.

Selecting a Trailer

⚠ WARNING

Loading a machine onto a trailer or truck increases the possibility of tip-over and could cause serious injury or death (Figure 11).

- **Use only full-width ramps.**
- **Ensure that the length of ramp is at least 4 times as long as the height of the trailer or truck bed to the ground. This ensures that ramp angle does not exceed 15 degrees on flat ground.**

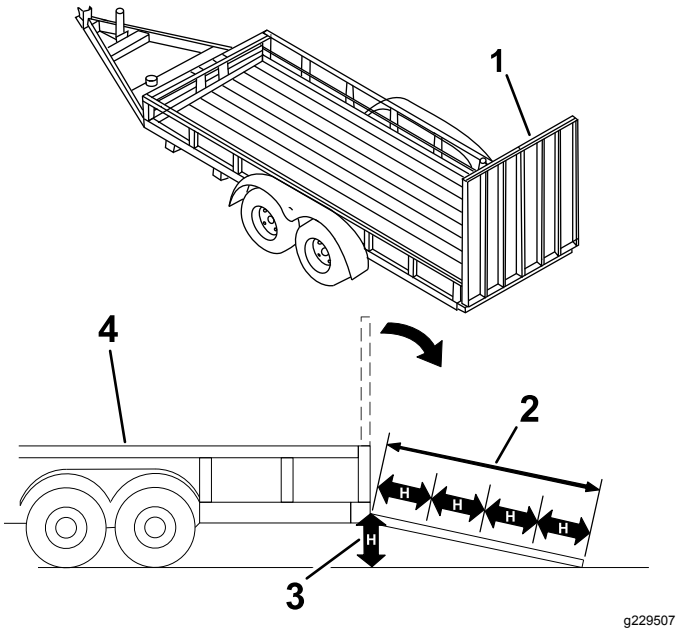

g229507

Figure 11

1. Full-width ramp(s) in stowed position
2. Ramp is at least 4 times as long as the height of the trailer or truck bed to the ground
3. H=height of the trailer or truck bed to the ground
4. Trailer

Loading the Machine

⚠ WARNING

Loading a machine onto a trailer or truck increases the possibility of tip-over and could cause serious injury or death.

- **Use extreme caution when operating a machine on a ramp.**
- **Load and unload the machine with the heavy end up the ramp.**
- **Avoid sudden acceleration or deceleration while driving the machine on a ramp as this could cause a loss of control or a tip-over situation.**

1. If using a trailer, connect it to the towing vehicle and connect the safety chains.
2. If applicable, connect the trailer brakes.
3. Lower the ramp(s).
4. Lower the loader arms.
5. Load the machine onto the trailer with the heavy end up the ramp, carrying loads low (Figure 12).
   - If the machine has a **full** load-bearing attachment (e.g., bucket) or a non-load-bearing attachment (e.g., trencher), drive the machine forward up the ramp.
   - If the machine has an **empty** load-bearing attachment or no attachment, back the machine up the ramp.

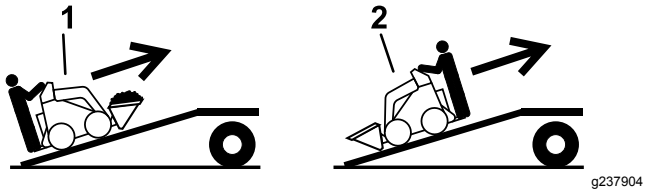

Figure 12

1. Machine with full attachment or non-load-bearing attachment—drive the machine forward up the ramp(s).
2. Machine with empty or no attachment—back the machine up the ramp(s).

6. Lower the loader arms all the way down.
7. Engage the parking brake (if equipped), shut off the engine, and remove the key.
8. Use the metal tie-down loops on the machine to securely fasten the machine to the trailer or truck with straps, chains, cable, or ropes (Figure 13). Refer to local regulations for tie-down requirements.

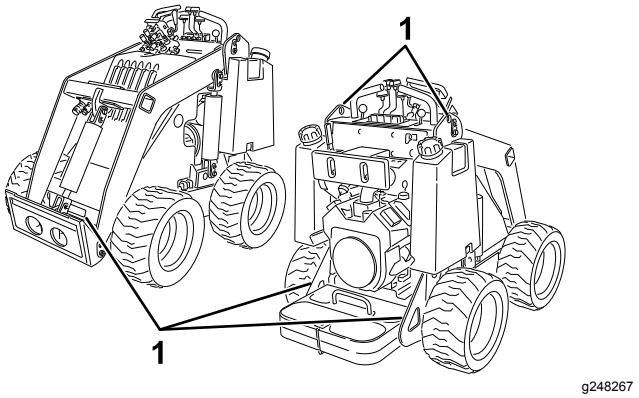

Figure 13

1. Tie-down loops

Unloading the Machine

1. Lower the ramp(s).
2. Unload the machine from the trailer with the heavy end up the ramp, carrying loads low (Figure 14).
   - If the machine has a **full** load-bearing attachment (e.g., bucket) or a non-load-bearing attachment (e.g., trencher), back it down the ramp.
   - If the machine has an **empty** load-bearing attachment or no attachment, drive it forward down the ramp.

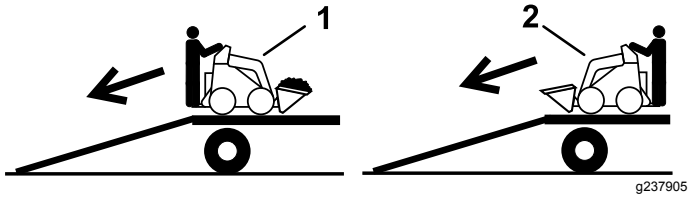

Figure 14

1. Machine with full attachment or non-load-bearing attachment—back the machine down the ramp(s).
2. Machine with empty or no attachment—drive the machine forward down the ramp(s).

Lifting the Machine

You can lift the machine using the tie-down/lift loops as lift points; refer to Figure 13.

Maintenance

Note: Determine the left and right sides of the machine from the normal operating position.

⚠ CAUTION

If you leave the key in the switch, someone could accidently start the engine and seriously injure you or other bystanders.

Remove the key from the switch before you perform any maintenance.

Maintenance Safety

- Park the machine on a level surface, disengage the auxiliary hydraulics, lower the attachment, engage the parking brake (if equipped), shut off the engine, and remove the key. Wait for all movement to stop and allow the machine to cool before adjusting, cleaning, storing, or repairing it.
- Clean up oil or fuel spills.
- Do not allow untrained personnel to service the machine.
- Use jack stands to support the components when required.
- Carefully release pressure from components with stored energy; refer to Relieving Hydraulic Pressure (page 32).
- Disconnect the battery before making any repairs; refer to Servicing the Battery (page 29).
- Keep your hands and feet away from the moving parts. If possible, do not make adjustments with the engine running.
- Keep all parts in good working condition and all hardware tightened. Replace all worn or damaged decals.
- Do not tamper with the safety devices.
- Use only Toro-approved attachments. Attachments can change the stability and the operating characteristics of the machine. You may void the warranty if you use the machine with unapproved attachments.
- Use only genuine Toro replacement parts.
- If any maintenance or repair requires the loader arms to be in the raised position, secure the arms in the raised position with the hydraulic-cylinder lock(s).

Recommended Maintenance Schedule(s)

Maintenance Service Interval	Maintenance Procedure
After the first 8 hours	• Torque the wheel-lug nuts. • Replace the hydraulic filter.
After the first 50 hours	• Change the engine oil and filter.
Before each use or daily	• Grease the machine. (Grease immediately after every washing.) • Check the engine oil level. • Check the tire pressure. • Remove debris from the machine. • Check for loose fasteners.
Every 25 hours	• Check the hydraulic lines for leaks, loose fittings, kinked lines, loose mounting supports, wear, weather, and chemical deterioration. • Check the hydraulic-fluid level.
Every 100 hours	• Change the engine oil. (Service more frequently if conditions are extremely dusty or sandy.) • Check the battery cable connections. • Torque the wheel-lug nuts.

Maintenance Service Interval	Maintenance Procedure
Every 200 hours	• Service the air cleaner. (Service more frequently if conditions are extremely dusty or sandy.) • Replace the carbon-canister air filter. (Service more frequently if conditions are extremely dusty or sandy.) • Replace the carbon-canister purge-line filter. (Service more frequently when using the vibratory-plow attachment.) • Change the engine oil and filter. (Service more frequently if conditions are extremely dusty or sandy.) • Check the spark plug(s).
Every 400 hours	• Replace the hydraulic filter.
Every 500 hours	• Replace the spark plug.
Every 1,500 hours	• Replace all moving hydraulic hoses.
Yearly	• Change the fuel filter. • Change the hydraulic fluid.
Yearly or before storage	• Touch up chipped paint

Important: **Refer to your engine owner's manual for additional maintenance procedures.**

Important: **If you must tilt the machine more than 25 degrees, clamp off the vent hose on the top of the fuel tank to prevent fuel from fouling the carbon canister.**

Pre-Maintenance Procedures

Using the Cylinder Locks

⚠ WARNING

The loader arms may lower when in the raised position, crushing anyone under them.

Install the cylinder lock(s) before performing maintenance that requires raised loader arms.

Installing the Cylinder Locks

1. Remove the attachment.
2. Raise the loader arms to the fully raised position.
3. Shut off the engine and remove the key.
4. Position a cylinder lock over each lift-cylinder rod (Figure 15).

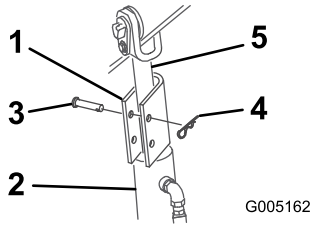

g005162

Figure 15

1. Cylinder lock
2. Lift cylinder
3. Hairpin cotter
4. Clevis pin
5. Lift-cylinder rod

5. Secure each cylinder lock with a clevis pin and cotter pin (Figure 15).
6. **Slowly** lower the loader arms until the cylinder locks contact the cylinder bodies and rod ends.

Removing and Storing the Cylinder Locks

Important: **Remove the cylinder locks from the rods and fully secure them in the storage position before operating the machine.**

1. Start the engine.
2. Raise the loader arms to the fully raised position.
3. Shut off the engine and remove the key.
4. Remove the clevis pin and cotter pin securing each cylinder lock.
5. Remove the cylinder locks.
6. Lower the loader arms.
7. Install the cylinder locks over the hydraulic hoses and secure them with the clevis pins and cotter pins (Figure 16).

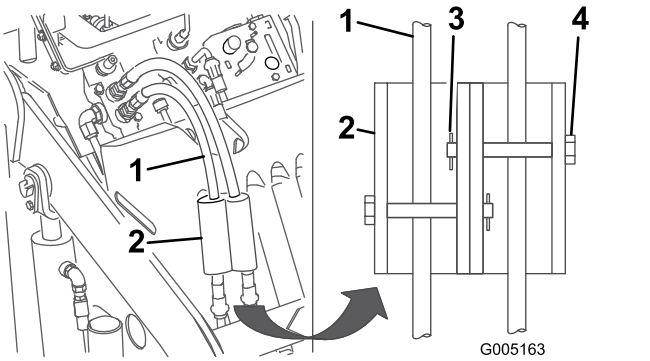

g005163

Figure 16

1. Hydraulic hoses
2. Cylinder locks
3. Hairpin cotter
4. Clevis pin

Accessing Internal Components

⚠ WARNING

Opening or removing covers, hoods, and screens while the engine is running could allow you to contact moving parts, seriously injuring you.

Before opening any of the covers, hoods, and screens, shut off the engine, remove the key from the key switch, and allow the engine to cool.

Removing the Hood

1. Park the machine on a level surface.
2. Raise the loader arms and install the cylinder locks.

   Note: If you must remove the hood without raising the loader arms, be very careful not to damage the hood or hydraulic hoses as you maneuver the hood out from under the arms.
3. Shut off the engine and remove the key.
4. Release the 4 locking tabs (Figure 17).

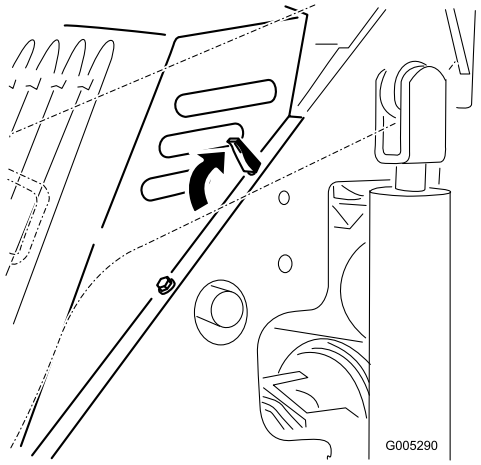

g005290

Figure 17
Top, left tab illustrated

5. Pull the hood off the machine.

Installing the Hood

1. Position the hood over the machine frame with the posts on the hood fitting into the holes in the frame (Figure 17).
2. Secure the hood by pushing the locking tabs forward and down (Figure 17).

Lubrication

Greasing the Machine

Service Interval: Before each use or daily (Grease immediately after every washing.)

Grease Type: General-purpose grease

1. Park the machine on a level surface, engage the parking brake (if equipped), and lower the loader arms.
2. Shut off the engine and remove the key.
3. Clean the grease fittings with a rag.
4. Connect a grease gun to each fitting (Figure 18 and Figure 19).

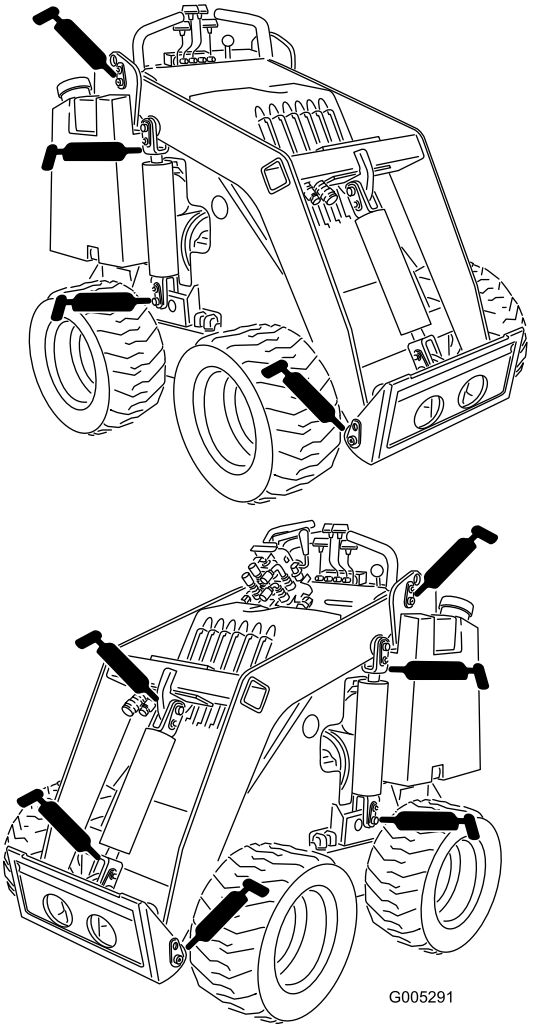

g005291

Figure 18

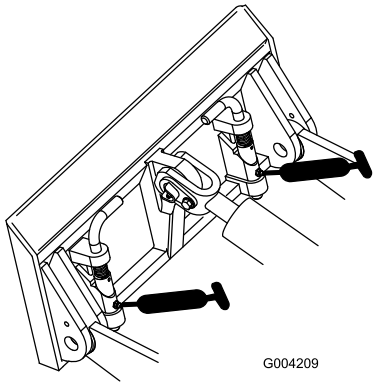

g004209

Figure 19

5. Pump grease into the fittings until grease begins to ooze out of the bearings (approximately 3 pumps).
6. Wipe up any excess grease.

Engine Maintenance

Engine Safety

- Shut off the engine before checking the oil or adding oil to the crankcase.
- Do not change the engine governor setting or overspeed the engine.
- Keep your hands, feet, face, clothing, and other body parts away from the muffler and other hot surfaces.

Servicing the Air Cleaner

Service Interval: Every 200 hours—Service the air cleaner. (Service more frequently if conditions are extremely dusty or sandy.)

1. Park the machine on a level surface, engage the parking brake (if equipped), and lower the loader arms.
2. Shut off the engine and remove the key.
3. Release the latches on the air cleaner and pull the air-cleaner cover off the air-filter body (Figure 20).

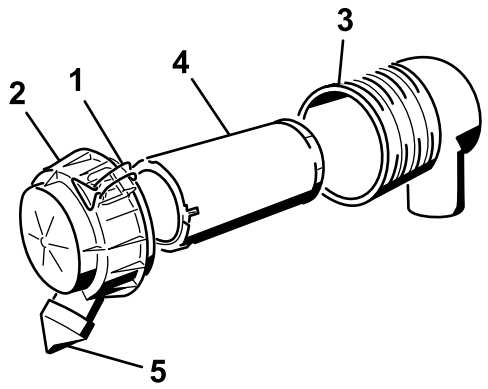

g200767

Figure 20

1. Latches
2. Air-cleaner cover
3. Air-filter body
4. Primary filter
5. Dust cap

4. Squeeze the dust cap sides to open it and knock the dust out.
5. Clean the inside of the air-cleaner cover with compressed air that is under 205 kPa (30 psi).

   Important: **Do not use compressed air on the air-cleaner body.**
6. Gently slide the filter out of the air-filter body (Figure 20).

   Note: Avoid knocking the filter into the side of the body.

Important: **Do not attempt to clean the filter.**

7. Inspect the new filter for tears, an oily film, or damage to the rubber seal. Look into the filter while shining a bright light on the outside of the filter; holes in the filter appear as bright spots.

   If the filter is damaged, do not use it.

8. Carefully install the filter (Figure 20).

   Note: Ensure that the filter is fully seated by pushing on the outer rim of the filter while installing it.

   Important: **Do not press on the soft inside area of the filter.**

9. Install the air-cleaner cover with the dust cap oriented downward and secure the latches (Figure 20).

Servicing the Carbon Canister

Replacing the Carbon-Canister Air Filter

Service Interval: Every 200 hours (Service more frequently if conditions are extremely dusty or sandy.)

1. Park the machine on a level surface, engage the parking brake (if equipped), and lower the loader arms.
2. Shut off the engine and remove the key.
3. Loosen the hose clamp above the carbon-canister air filter (Figure 21).

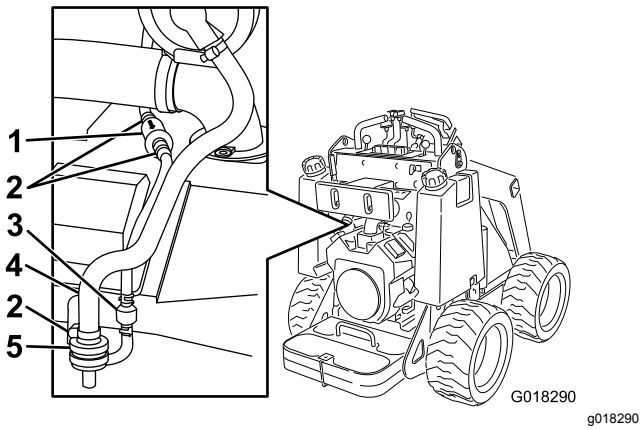

Figure 21

1. Purge-line filter
2. Hose clamp
3. Check valve
4. Hose to carbon canister
5. Air filter

4. Remove and discard the air filter (Figure 21).

Important: **If a small tube section comes out of the larger hose on the barb of the filter, remove it from the filter and insert it back into the hose.**

5. Install a new filter into the hose and secure it with the hose clamp (Figure 21).

Replacing the Carbon-Canister Purge-Line Filter

Service Interval: Every 200 hours (Service more frequently when using the vibratory-plow attachment.)

Note: Check the purge-line filter occasionally for dirt. If the filter appears to be dirty, replace it.

1. Park the machine on a level surface, engage the parking brake (if equipped), and lower the loader arms.
2. Shut off the engine and remove the key.
3. Move the spring-type hose clamps on both sides of the carbon canister purge-line filter away from the filter (Figure 21).
4. Remove and discard the purge-line filter (Figure 21).
5. Install a new filter into the hose with the arrow on the filter pointing toward the check valve and secure it with the hose clamps (Figure 21).

Servicing the Engine Oil

Service Interval: Before each use or daily—Check the engine oil level.

After the first 50 hours—Change the engine oil and filter.

Every 100 hours—Change the engine oil. (Service more frequently if conditions are extremely dusty or sandy.)

Every 200 hours (Service more frequently if conditions are extremely dusty or sandy.)

Engine-Oil Specifications

Oil Type: Detergent oil (API service SJ or higher)

Crankcase Capacity: with a filter change, 1.8 L (61 fl oz); with no filter change, 1.6 L (54 fl oz)

Viscosity: See table below

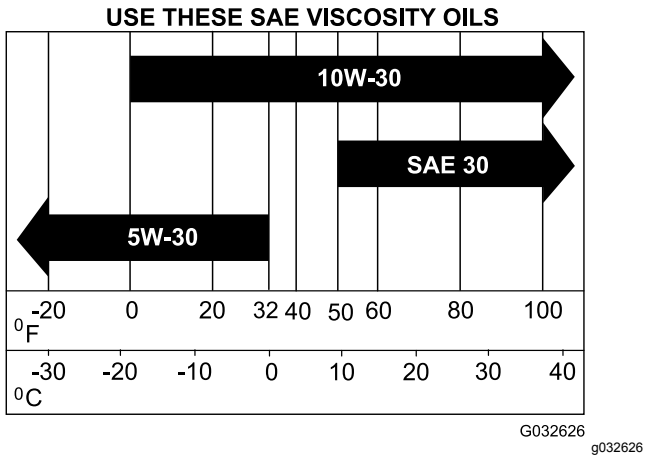

Figure 22

Checking the Engine-Oil Level

1. Park the machine on a level surface, engage the parking brake (if equipped), and lower the loader arms.
2. Shut off the engine and remove the key.
3. Clean the area around the oil dipstick (Figure 23).

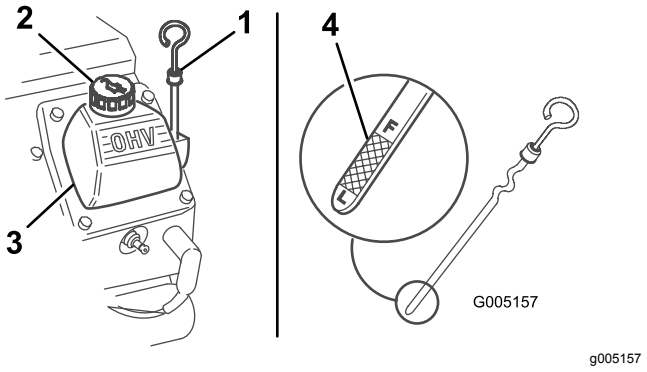

Figure 23

1. Oil dipstick
2. Fill cap
3. Valve cover
4. Metal end

4. Pull out the dipstick and wipe the metal end clean (Figure 23).
5. Slide the dipstick fully into the dipstick tube (Figure 23).
6. Pull the dipstick out and look at the metal end.
7. If the oil level is low, clean the area around the oil-fill cap and remove the cap (Figure 23).
8. Slowly pour only enough oil into the valve cover to raise the level to the F (Full) mark.

   Important: **Do not overfill the crankcase with oil because the engine may be damaged.**
9. Replace the fill cap and dipstick.

Changing the Engine Oil and Filter

1. Start the engine and let it run for 5 minutes.

   Note: This warms the oil so that it drains better.
2. Park the machine so that the drain side is slightly lower than the opposite side to ensure that the oil drains completely.
3. Lower the loader arms, chock the wheels or engage the parking brake (if equipped), shut off the engine, and remove the key.
4. Place one end of a hose on the drain valve and the other end in a pan (Figure 24).

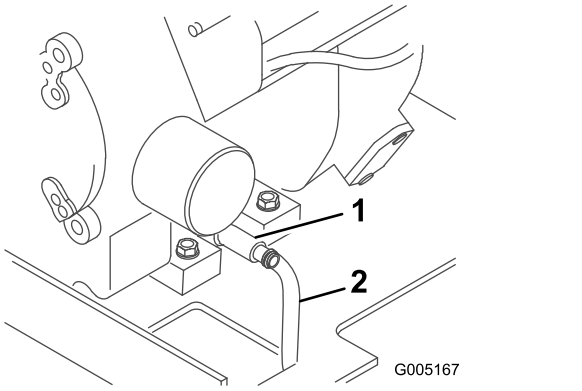

Figure 24

1. Oil-drain valve
2. Hose

5. Open the drain valve by turning it counterclockwise, pulling out as you turn it (Figure 24).
6. When the oil has drained completely, close the drain valve and remove the hose.

   Note: Dispose of the used oil at a certified recycling center.
7. Remove the old filter and wipe the filter adapter (Figure 25) gasket surface.

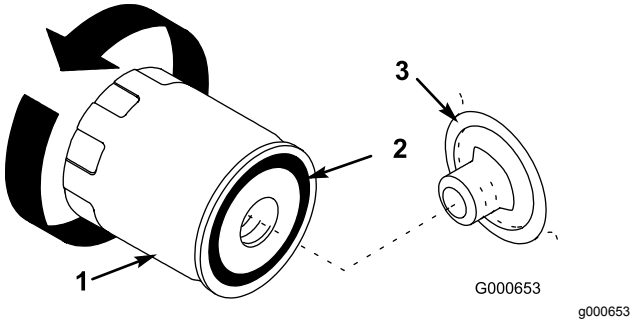

Figure 25

1. Oil filter
2. Gasket
3. Adapter

8. Pour new oil of the proper type in through the center hole of the filter. Stop pouring when the oil reaches the bottom of the threads.
9. Allow 1 to 2 minutes for the oil to be absorbed by filter material, then pour off the excess oil.
10. Apply a thin coat of new oil to the rubber gasket on the replacement filter (Figure 25).
11. Install the replacement oil filter to the filter adapter. Turn the oil filter clockwise until the rubber gasket contacts the filter adapter, then tighten the filter an additional 1/2 turn (Figure 25).
12. Remove the fill cap (Figure 23) and slowly pour approximately 80% of the specified amount of oil in through the valve cover.
13. Check the oil level.
14. Slowly add additional oil to bring the level to the F (full) mark on the dipstick.
15. Install the fill cap.

Servicing the Spark Plug(s)

Service Interval: Every 200 hours—Check the spark plug(s).

Every 500 hours—Replace the spark plug.

Ensure that the air gap between the center and side electrodes is correct before installing each spark plug. Use a spark-plug wrench for removing and installing each spark plug and a gapping tool/feeler gauge to check and adjust the air gap. Install new spark plugs if necessary.

Type: Champion XC12YC or equivalent.

Air Gap: 0.75 mm (0.03 inch)

Removing the Spark Plug

1. Park the machine on a level surface, engage the parking brake (if equipped), and lower the loader arms.
2. Shut off the engine, remove the key, and allow the engine to cool.
3. Clean the area around the base of the plug(s) to keep dirt and debris out of the engine.
4. Remove the spark plug(s) as shown in Figure 26.

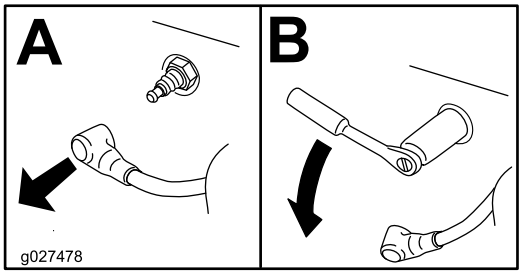

Figure 26

Checking the Spark Plug

Important: **Do not clean the spark plug(s). Always replace the spark plug(s) when it has a black coating, worn electrodes, an oily film, or cracks.**

If you see light brown or gray on the insulator, the engine is operating properly. A black coating on the insulator usually means the air cleaner is dirty.

Set the gap to 0.75 mm (0.03 inch).

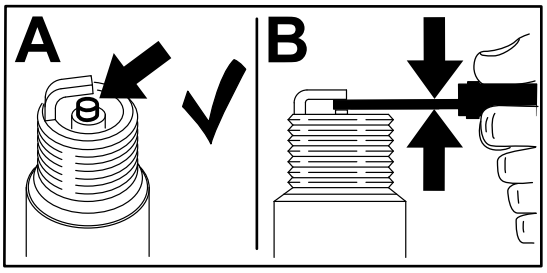

g206628

Figure 27

Installing the Spark Plug

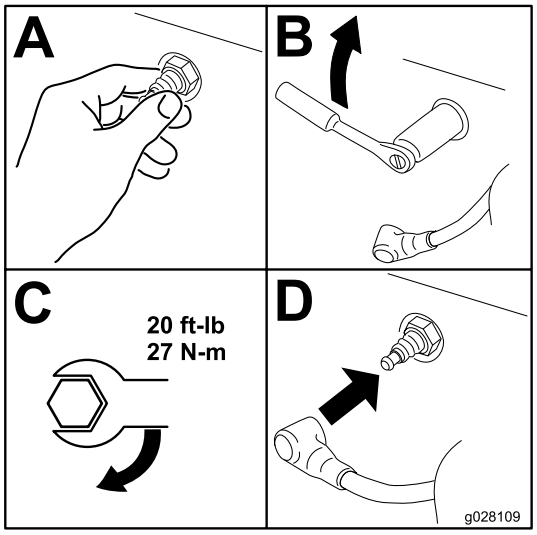

g028109

Figure 28

Fuel System Maintenance

⚠ DANGER

In certain conditions, fuel is extremely flammable and highly explosive. A fire or explosion from fuel can burn you and others and can damage property.

- **Drain fuel from the fuel tanks when the engine is cold. Do this outdoors in an open area. Wipe up any fuel that spills.**
- **Never smoke when draining fuel, and stay away from an open flame or where a spark may ignite the fumes.**
- **Refer to Fuel Safety (page 12) for a complete list of fuel related precautions.**

Changing the Fuel Filter

Service Interval: Yearly

Important: **Never install a dirty filter.**

1. Park the machine on a level surface and lower the loader arms.
2. Shut off the engine and remove the key.
3. Shut off the fuel valve on the bottom of each fuel tank (Figure 30).
4. Clamp the fuel line between the fuel tanks and the fuel filter to block the fuel flow.
5. Squeeze the ends of the hose clamps together and slide them away from the filter (Figure 29).

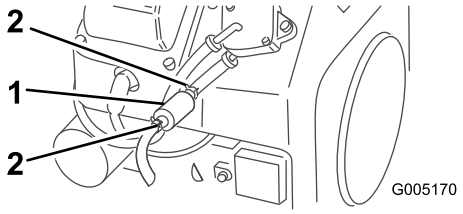

g005170

Figure 29

1. Filter
2. Hose clamp

6. Place a drain pan under the fuel lines to catch any leaks, then remove the filter from the fuel lines (Figure 29).
7. Install a new filter and move the hose clamps close to the filter.
8. Remove the clamp blocking fuel flow and open the fuel valve.

Draining the Fuel Tank(s)

1. Park the machine on a level surface and lower the loader arms.
2. Shut off the engine and remove the key.
3. Shut off the fuel valve in the hose near the bottom of the fuel tank(s) as shown in Figure 30.

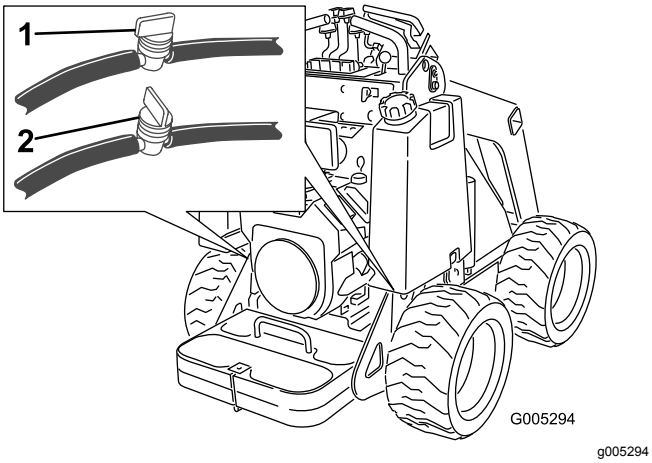

Figure 30

1. Fuel valve (open)
2. Fuel valve (closed)

4. Loosen the hose clamp at the fuel filter and slide it up the fuel line away from the filter.
5. Pull the fuel line off the fuel filter, open the fuel valve, loosen the fuel tank cap, and allow the fuel to drain into a fuel container or drain pan.
6. Install the fuel line onto the fuel filter.
7. Slide the hose clamp close to the fuel filter to secure the fuel line.
8. Open the fuel valve(s) in the hose(s) near the bottom of the fuel tank(s) as illustrated in Figure 30.

Note: Now is the best time to install a new fuel filter because the fuel tank(s) is empty.

Electrical System Maintenance

Electrical System Safety

- Disconnect the battery before repairing the machine. Disconnect the negative terminal first and the positive last. Connect the positive terminal first and the negative last.
- Charge the battery in an open, well-ventilated area, away from sparks and flames. Unplug the charger before connecting or disconnecting the battery. Wear protective clothing and use insulated tools.
- Battery acid is poisonous and can cause burns. Avoid contact with skin, eyes, and clothing. Protect your face, eyes, and clothing when working with a battery.
- Battery gases can explode. Keep cigarettes, sparks, and flames away from the battery.

Servicing the Battery

Service Interval: Every 100 hours

Always keep the battery clean and fully charged. Use a paper towel to clean the battery case. If the battery terminals are corroded, clean them with a solution of 4 parts water and 1 part baking soda. Apply a light coating of grease to the battery terminals to reduce corrosion.

Specifications: 12 V, 340 A (cold cranking)

Removing the Battery

⚠ WARNING

Battery terminals or metal tools could short against metal machine components, causing sparks. Sparks can cause the battery gasses to explode, resulting in personal injury.

- **When removing or installing the battery, do not allow the battery terminals to touch any metal parts of the machine.**
- **Do not allow metal tools to short between the battery terminals and metal parts of the machine.**

1. Park the machine on a level surface, engage the parking brake (if equipped), and lower the loader arms.
2. Shut off the engine and remove the key.
3. Remove the hood.

4. Remove the wing nuts and bar securing the battery (Figure 31).

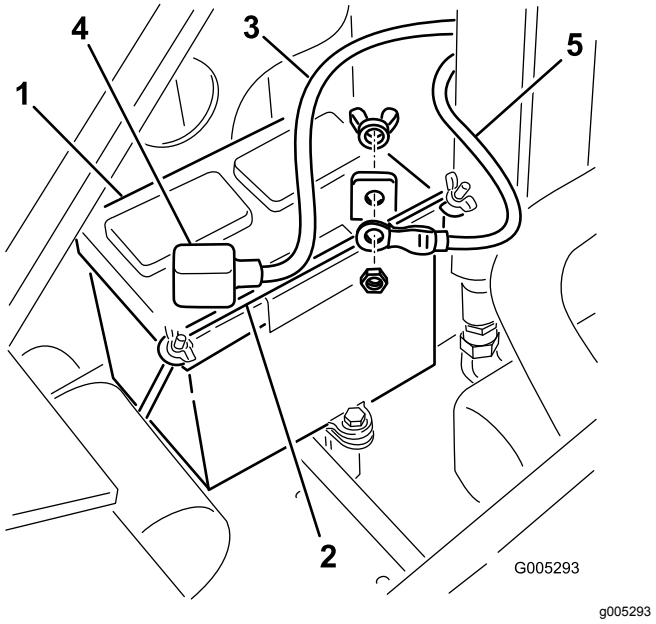

Figure 31

1. Battery
2. Bar
3. Positive cable
4. Rubber cover
5. Negative cable

5. Disconnect the negative (black) ground cable from the battery post (Figure 31). Retain the fasteners.
6. Slide the rubber cover off the positive (red) cable.
7. Disconnect the positive (red) cable from the battery post (Figure 31). Retain the fasteners.
8. Gently push the hydraulic hoses aside and lift the battery out of the chassis.

Charging the Battery

Important: **Always keep the battery fully charged (1.265 specific gravity). This is especially important to prevent battery damage when the temperature is below 0°C (32°F).**

1. Remove the battery from the machine; refer to Removing the Battery (page 29).
2. Charge the battery for 10 to 15 minutes at 25 to 30 A or 30 minutes at 4 to 6 A (Figure 32). Do not overcharge the battery.

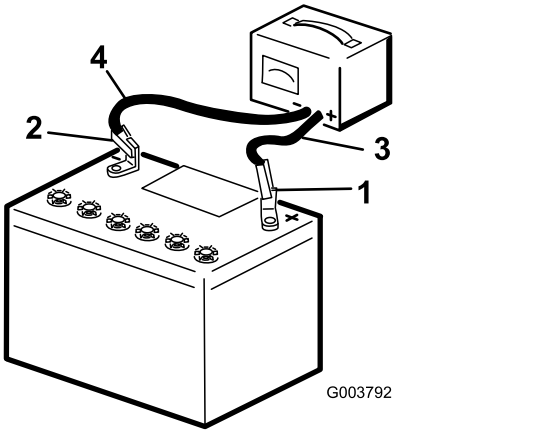

Figure 32

1. Positive battery post
2. Negative battery post
3. Red (+) charger lead
4. Black (-) charger lead

3. When the battery is fully charged, unplug the charger from the electrical outlet, then disconnect the charger leads from the battery posts (Figure 32).

Cleaning the Battery

Note: Keep the terminals and the entire battery case clean, to help extend battery life.

1. Park the machine on a level surface, engage the parking brake (if equipped), and lower the loader arms.
2. Shut off the engine and remove the key.
3. Remove the battery from the machine; Removing the Battery (page 29).
4. Wash the entire case with a solution of baking soda and water.
5. Rinse the battery with clear water.
6. Coat the battery posts and cable connectors with Grafo 112X (skin-over) grease (Toro Part No. 505-47) or petroleum jelly to prevent corrosion.
7. Install the battery; refer to Installing the Battery (page 31).

Installing the Battery

1. Using the fasteners previously removed, install the positive (red) battery cable to the positive (+) battery terminal (Figure 31).
2. Slide the red terminal boot onto the positive battery post.
3. Using the fasteners previously removed, install the negative (black) battery cable to the negative (-) battery terminal (Figure 31).
4. Secure the battery using the bar and wing nuts (Figure 31).

Important: **Ensure that the battery cables do not contact any sharp edges or each other.**

Servicing a Replacement Battery

The original battery is maintenance-free and does not require service. For servicing a replacement battery, refer to the battery manufacturer's instructions.

Drive System Maintenance

Checking the Tire Pressure

Service Interval: Before each use or daily

Maintain the air pressure in the tires as specified. Check the tires when they are cold to get the most accurate reading.

Pressure: 103 to 138 kPa (15 to 20 psi)

Note: Use a lower tire pressure, 103 kPa (15 psi), when operating in sandy soil conditions to provide better traction in the loose soil.

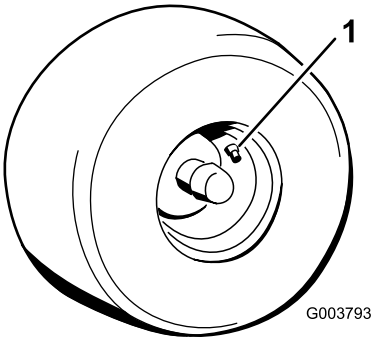

g003793

Figure 33

1. Valve stem

Checking the Wheel-Lug Nuts

Service Interval: After the first 8 hours

Every 100 hours

Check and torque the wheel lug nuts to 68 N·m (50 ft-lb).

Hydraulic System Maintenance

Hydraulic System Safety

- Seek immediate medical attention if fluid is injected into skin. Injected fluid must be surgically removed within a few hours by a doctor.
- Ensure that all hydraulic-fluid hoses and lines are in good condition and all hydraulic connections and fittings are tight before applying pressure to the hydraulic system.
- Keep your body and hands away from pinhole leaks or nozzles that eject high-pressure hydraulic fluid.
- Use cardboard or paper to find hydraulic leaks.
- Safely relieve all pressure in the hydraulic system before performing any work on the hydraulic system.

Relieving Hydraulic Pressure

To relieve hydraulic pressure while the engine is on, disengage the auxiliary hydraulics and fully lower the loader arms.

To relieve the pressure while the engine is off, move the auxiliary-hydraulics lever between the forward and reverse flow positions to relieve auxiliary hydraulic pressure, move the attachment-tilt lever forward and rearward, and move the loader-arm lever forward to lower the loader arms (Figure 34).

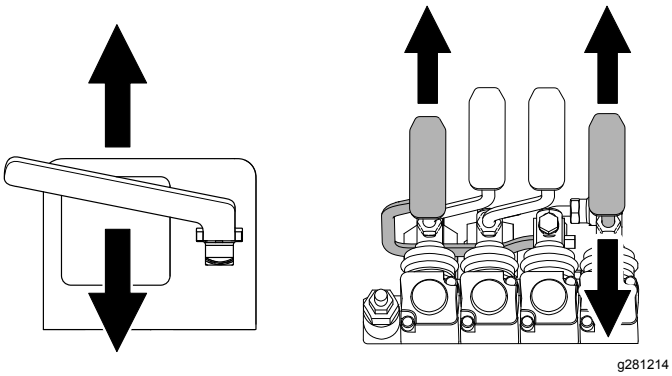

g281214

Figure 34

Hydraulic Fluid Specifications

Hydraulic Tank Capacity: 62 L (16.3 US gallons)

Use only 1 of the following fluids in the hydraulic system:

- **Toro Premium Transmission/Hydraulic Tractor Fluid** (refer to your Authorized Service Dealer for more information)
- **Toro PX Extended Life Hydraulic Fluid** (refer to your Authorized Service Dealer for more information)
- If either of the above Toro fluids are not available, you may use another Universal Tractor Hydraulic Fluid (UTHF), but they must be only conventional, petroleum-based products. The specifications must fall within the listed range for all the following material properties and the fluid should meet the listed industry standards. Check with your hydraulic fluid supplier to determine if the fluid meets these specifications.

  Note: Toro will not assume responsibility for damage caused by improper substitutions, so use only products from reputable manufacturers who will stand behind their recommendations.

Material Properties	
Viscosity, ASTM D445	cSt at 40°C: 55 to 62
	cSt at 100°C: 9.1 to 9.8
Viscosity index, ASTM D2270	140 to 152
Pour Point, ASTM D97	-43 to -37°C (-35 to -35 °F)
Industry Standards	
API GL-4, AGCO Powerfluid 821 XL, Ford New Holland FNHA-2-C-201.00, Kubota UDT, John Deere J20C, Vickers 35VQ25 and Volvo WB-101/BM	

Note: Many hydraulic fluids are almost colorless, making it difficult to spot leaks. A red dye additive for the hydraulic system fluid is available in 20 ml (0.67 fl oz) bottles. One bottle is sufficient for 15 to 22 L (4 to 6 US gallons) of hydraulic fluid. Order Part No. 44-2500 from your Authorized Service Dealer.

Checking the Hydraulic-Fluid Level

Service Interval: Every 25 hours

Check the hydraulic-fluid level before the engine is first started and after every 25 operating hours.

Refer to Checking the Hydraulic-Fluid Level (page 33).

Important: **Always use the correct hydraulic fluid. Unspecified fluids will damage the hydraulic system.**

1. Park the machine on a level surface, remove any attachment, engage the parking brake (if equipped), raise the loader arms, and install the cylinder locks.
2. Shut off the engine, remove the key, and allow the engine to cool.
3. Remove the hood/front access cover.
4. Clean the area around the filler neck of the hydraulic tank (Figure 35).
5. Remove the filler-neck cap and check the fluid level on the dipstick (Figure 35).

   The fluid level should be between the marks on the dipstick.

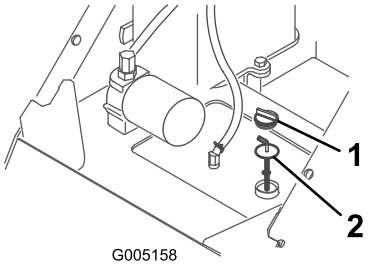

Figure 35

1. Filler neck cap
2. Dipstick

6. If the level is low, add enough fluid to raise it to the proper level.
7. Install the filler-neck cap.
8. Install the hood/front access cover.
9. Remove and store the cylinder locks and lower the loader arms.

Replacing the Hydraulic Filter

Service Interval: After the first 8 hours

Every 400 hours

Important: **Do not substitute an automotive oil filter; otherwise severe hydraulic system damage may result.**

1. Park the machine on a level surface, remove any attachment, engage the parking brake (if equipped), raise the loader arms, and install the cylinder locks.
2. Shut off the engine and remove the key.
3. Remove the hood/front access cover.
4. Place a drain pan under the filter.
5. Remove the old filter (Figure 36) and wipe the surface of the filter adapter clean.

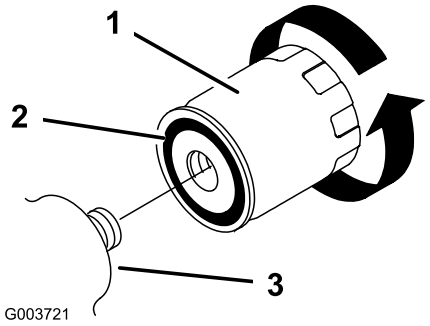

Figure 36

1. Hydraulic filter
2. Gasket
3. Filter adapter

6. Apply a thin coat hydraulic fluid to the rubber gasket on the replacement filter (Figure 36).
7. Install the replacement hydraulic filter onto the filter adapter (Figure 36). Tighten it clockwise until the rubber gasket contacts the filter adapter, then tighten the filter an additional 1/2 turn.
8. Clean up any spilled fluid.
9. Start the engine and let it run for about 2 minutes to purge air from the system.
10. Shut off the engine and check for leaks.
11. Check the fluid level in the hydraulic tank; refer to Checking the Hydraulic-Fluid Level (page 33). Add fluid to raise the level to mark on dipstick. Do not overfill the tank.
12. Install the hood/front access cover.
13. Remove and store the cylinder locks and lower the loader arms.

Changing the Hydraulic Fluid

Service Interval: Yearly

1. Park the machine on a level surface, remove any attachment, engage the parking brake (if equipped), raise the loader arms, and install the cylinder locks.
2. Shut off the engine and remove the key.
3. Remove the hood/front-access cover.
4. Place a large drain pan under the machine that can hold at least the hydraulic-tank capacity.
5. Remove the drain plug from the bottom of the hydraulic tank and allow the fluid to completely drain out.
6. Install the drain plug.
7. Fill the hydraulic tank with hydraulic fluid; refer to Hydraulic Fluid Specifications (page 32).

   Note: Dispose of used oil at a certified recycling center.
8. Install the hood/front-access cover.
9. Remove and store the cylinder locks and lower the loader arms.

Cleaning

Removing Debris

Service Interval: Before each use or daily

Important: **Operating the engine with a blocked grass screen, dirty or plugged cooling fins, and/or cooling shrouds removed will result in engine damage from overheating.**

1. Park the machine on a level surface, raise the loader arms, and install the cylinder locks.
2. Shut off the engine and remove the key.
3. Clean any debris from the grill.
4. Wipe away debris from the air cleaner.
5. Clean any debris buildup on the engine with a brush or blower.

   Important: **Blow the dirt out rather than wash it out. If you use water, keep it away from electrical items and hydraulic valves. Do not use a high-pressure washer. High-pressure washing can damage the electrical system and hydraulic valves or deplete grease.**
6. Remove and store the cylinder locks and lower the loader arms.

Storage

Storage Safety

- Shut off the engine, remove the key, wait for all moving parts to stop, and allow the machine to cool before storing it.
- Do not store the machine or fuel near flames.

Storage

1. Park the machine on a level surface and lower the loader arms.
2. Shut off the engine and remove the key.
3. Remove dirt and grime from the external parts of the entire machine, especially the engine. Clean dirt and chaff from the outside of both the cylinder head fins and blower housing of the engine.

   Important: **You can wash the machine with mild detergent and water. Do not pressure-wash the machine. Avoid excessive use of water, especially near the control panel, engine, hydraulic pumps, and motors.**
4. Service the air cleaner; refer to Servicing the Air Cleaner (page 24).
5. Grease the machine; refer to Greasing the Machine (page 23).
6. Change the engine oil; refer to Changing the Engine Oil and Filter (page 26).
7. Remove the spark plugs and check the condition of each; refer to Servicing the Spark Plug(s) (page 27).
8. With the spark plugs removed from the engine, pour 30 ml (2 tablespoons) of engine oil into each spark-plug hole.
9. Place rags over the spark-plug holes to catch any oil spray, then use the starter to crank the engine and distribute the oil inside the cylinder.
10. Install the spark plugs, but do not install the wires on the spark plugs.
11. Check the tire pressure; refer to Checking the Tire Pressure (page 31).
12. Charge the battery; refer to Charging the Battery (page 30).
13. For storage over 30 days, prepare the machine as follows:

    A. Add a petroleum-based stabilizer/conditioner to fuel in the tank. Follow mixing instructions from the stabilizer manufacturer. Do not use an alcohol-based stabilizer (ethanol or methanol).

    Note: A fuel stabilizer/conditioner is most effective when it is mixed with fresh fuel and is used at all times.

    B. Run the engine to distribute conditioned fuel through the fuel system for 5 minutes.

    C. Shut off the engine, allow it to cool, and drain the fuel tanks; refer to Draining the Fuel Tank(s) (page 29).

    D. Start the engine and run it until it shuts off.

    E. Engage the choke.

    F. Start and run the engine until it does not start again.

    G. Dispose of fuel properly; recycle it according to local codes.

    Important: **Do not store fuel containing stabilizer/conditioner longer than the duration recommended by the fuel-stabilizer manufacturer.**
14. Check and tighten all fasteners. Repair or replace any part that is worn, damaged, or missing.
15. Paint all scratched or bare metal surfaces. Paint is available from your Authorized Service Dealer.
16. Store the machine in a clean, dry garage or storage area. Remove the key from the ignition switch and keep it in a memorable place.
17. Cover the machine to protect it and keep it clean.

Important: **When removing the machine from storage, charge the battery; refer to Charging the Battery (page 30).**

Troubleshooting

Problem	Possible Cause	Corrective Action
The starter does not crank.	1. The auxiliary hydraulics lever is not in the NEUTRAL position. 2. The battery is discharged. 3. The electrical connections are corroded or loose. 4. The relay or switch is damaged.	1. Move the lever to the NEUTRAL position. 2. Charge the battery or replace it. 3. Check the electrical connections for good contact. 4. Contact your Authorized Service Dealer.
The engine does not start, starts hard, or fails to keep running.	1. The starting procedure is incorrect. 2. The fuel tank is empty. 3. The choke is not engaged. 4. The air cleaner is dirty. 5. The spark plug wires are loose or disconnected. 6. The spark plugs are pitted, fouled, or the gap is incorrect. 7. There is dirt in the fuel filter. 8. Dirt, water, stale fuel, or incorrect fuel is in the fuel system.	1. Refer to the Starting the Engine procedure. 2. Fill the tank with fresh fuel. 3. Engage the choke. 4. Clean or replace the air-cleaner elements. 5. Install the wires on the spark plugs. 6. Install new, correctly gapped spark plugs. 7. Replace the fuel filter. 8. Contact your Authorized Service Dealer.
The engine loses power.	1. The engine load is excessive. 2. The air cleaner is dirty. 3. The engine-oil level is incorrect. 4. The cooling fins and air passages under the engine blower housing are plugged. 5. The spark plugs are pitted, fouled, or the gap is incorrect. 6. There is dirt in the fuel filter. 7. Dirt, water, stale fuel, or incorrect fuel is in the fuel system. 8. The engine high idle speed is too low.	1. Reduce the load; use a lower ground speed. 2. Clean or replace the air cleaner elements. 3. Fill or drain to the Full mark. 4. Remove any obstructions from the cooling fins and air passages. 5. Install new, correctly gapped spark plugs. 6. Replace the fuel filter. 7. Contact your Authorized Service Dealer. 8. Contact your Authorized Service Dealer.
The engine overheats.	1. The engine load is excessive. 2. The engine-oil level is incorrect. 3. The cooling fins and air passages under the engine blower housing are plugged. 4. The engine high idle speed is too low.	1. Reduce the load; use a lower ground speed. 2. Fill or drain to the Full mark. 3. Remove any obstructions from the cooling fins and air passages. 4. Contact your Authorized Service Dealer.
There is abnormal vibration.	1. The engine mounting bolts are loose.	1. Tighten the engine mounting bolts.
The machine does not drive.	1. The parking brake is engaged. 2. The hydraulic-fluid level is low. 3. The hydraulic system is damaged.	1. Disengage the parking brake. 2. Add hydraulic fluid to the reservoir. 3. Contact your Authorized Service Dealer.

Problem	Possible Cause	Corrective Action
When at rest, the loader arms lower more than 7.6 cm (3 inches) per hour (less than 7.6 cm or 3 inches an hour is normal for the machine).	1. The valve spool is leaking.	1. Contact your Authorized Service Dealer.
When at rest, the loader arms lower 5 cm (2 inches) quickly and then stop.	1. The cylinder seals are leaking.	1. Replace the seals.

Schematics

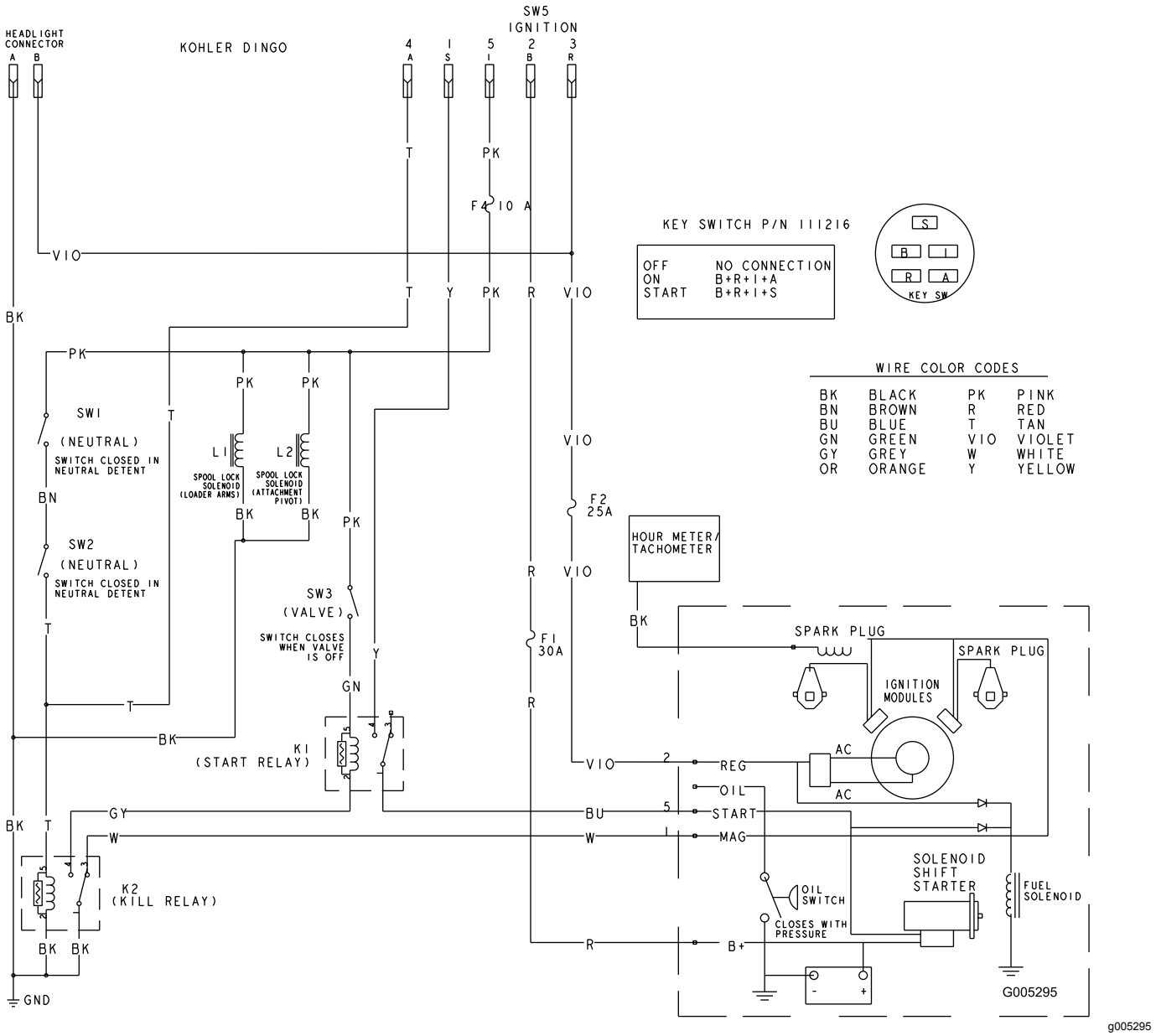

Electrical Schematic (Rev. A)

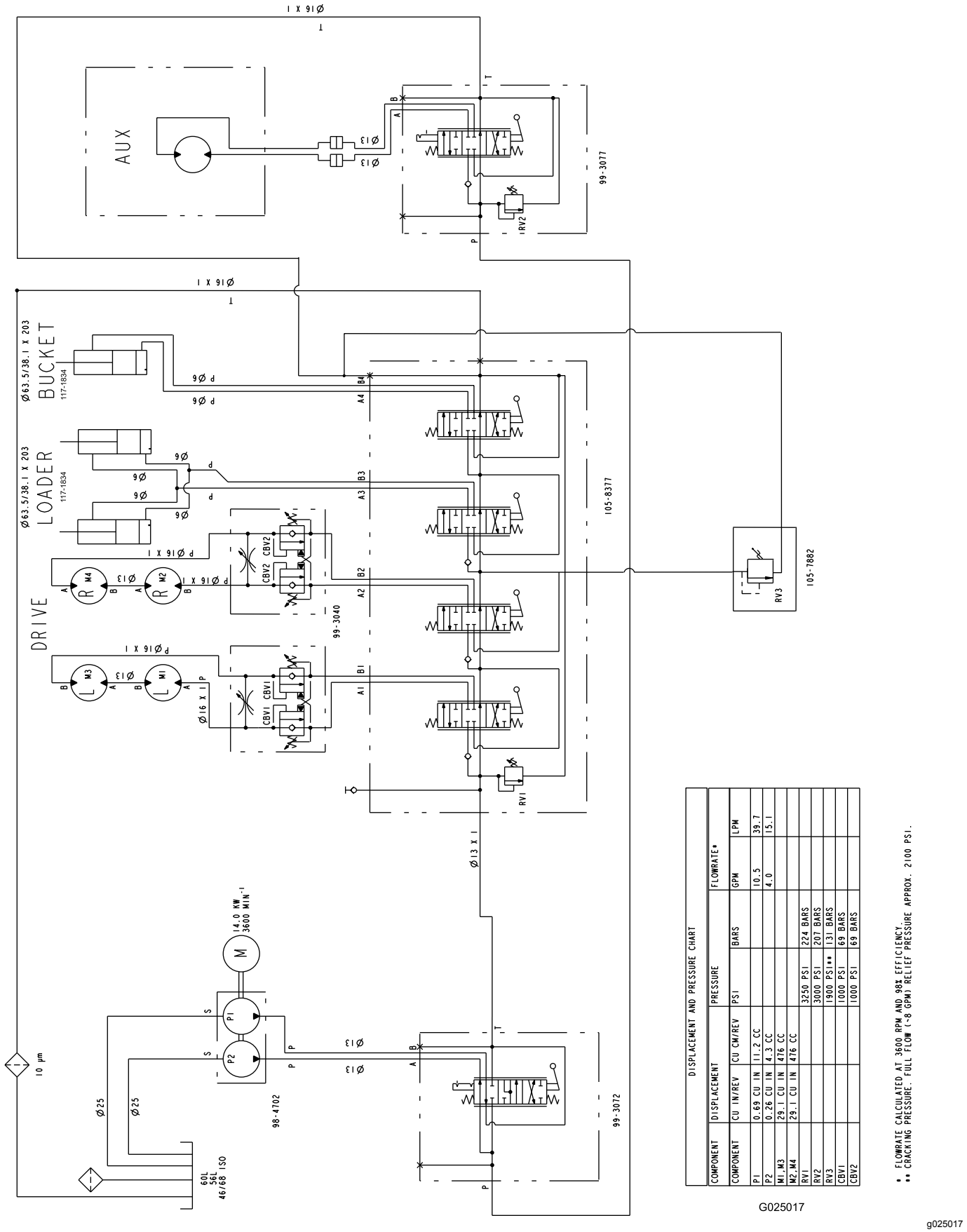

DISPLACEMENT AND PRESSURE CHART

COMPONENT	DISPLACEMENT		PRESSURE		FLOWRATE*	
COMPONENT	CU IN/REV	CU CM/REV	PSI	BARS	GPM	LPM
P1	0.69 CU IN	11.2 CC			10.5	39.7
P2	0.26 CU IN	4.3 CC			4.0	15.1
M1,M3	29.1 CU IN	476 CC				
M2,M4	29.1 CU IN	476 CC				
RV1			3250 PSI	224 BARS		
RV2			3000 PSI	207 BARS		
RV3			1900 PSI**	131 BARS		
CBV1			1000 PSI	69 BARS		
CBV2			1000 PSI	69 BARS		

* FLOWRATE CALCULATED AT 3600 RPM AND 98% EFFICIENCY.
** CRACKING PRESSURE. FULL FLOW (~8 GPM) RELIEF PRESSURE APPROX. 2100 PSI.

G025017

g025017

Hydraulic Schematic (Rev. B)

Notes:

Notes:

Notes:

European Privacy Notice

The Information Toro Collects
Toro Warranty Company (Toro) respects your privacy. In order to process your warranty claim and contact you in the event of a product recall, we ask you to share certain personal information with us, either directly or through your local Toro company or dealer.

The Toro warranty system is hosted on servers located within the United States where privacy law may not provide the same protection as applies in your country.

BY SHARING YOUR PERSONAL INFORMATION WITH US, YOU ARE CONSENTING TO THE PROCESSING OF YOUR PERSONAL INFORMATION AS DESCRIBED IN THIS PRIVACY NOTICE.

The Way Toro Uses Information
Toro may use your personal information to process warranty claims, to contact you in the event of a product recall and for any other purpose which we tell you about. Toro may share your information with Toro's affiliates, dealers or other business partners in connection with any of these activities. We will not sell your personal information to any other company. We reserve the right to disclose personal information in order to comply with applicable laws and with requests by the appropriate authorities, to operate our systems properly or for our own protection or that of other users.

Retention of your Personal Information
We will keep your personal information as long as we need it for the purposes for which it was originally collected or for other legitimate purposes (such as regulatory compliance), or as required by applicable law.

Toro's Commitment to Security of Your Personal Information
We take reasonable precautions in order to protect the security of your personal information. We also take steps to maintain the accuracy and current status of personal information.

Access and Correction of your Personal Information
If you would like to review or correct your personal information, please contact us by email at legal@toro.com.

Australian Consumer Law

Australian customers will find details relating to the Australian Consumer Law either inside the box or at your local Toro Dealer.

California Proposition 65 Warning Information

What is this warning?

You may see a product for sale that has a warning label like the following:



WARNING: Cancer and Reproductive Harm—www.p65Warnings.ca.gov.

What is Prop 65?

Prop 65 applies to any company operating in California, selling products in California, or manufacturing products that may be sold in or brought into California. It mandates that the Governor of California maintain and publish a list of chemicals known to cause cancer, birth defects, and/or other reproductive harm. The list, which is updated annually, includes hundreds of chemicals found in many everyday items. The purpose of Prop 65 is to inform the public about exposure to these chemicals.

Prop 65 does not ban the sale of products containing these chemicals but instead requires warnings on any product, product packaging, or literature with the product. Moreover, a Prop 65 warning does not mean that a product is in violation of any product safety standards or requirements. In fact, the California government has clarified that a Prop 65 warning "is not the same as a regulatory decision that a product is 'safe' or 'unsafe.'" Many of these chemicals have been used in everyday products for years without documented harm. For more information, go to https://oag.ca.gov/prop65/faqs-view-all.

A Prop 65 warning means that a company has either (1) evaluated the exposure and has concluded that it exceeds the "no significant risk level"; or (2) has chosen to provide a warning based on its understanding about the presence of a listed chemical without attempting to evaluate the exposure.

Does this law apply everywhere?

Prop 65 warnings are required under California law only. These warnings are seen throughout California in a wide range of settings, including but not limited to restaurants, grocery stores, hotels, schools, and hospitals, and on a wide variety of products. Additionally, some online and mail order retailers provide Prop 65 warnings on their websites or in catalogs.

How do the California warnings compare to federal limits?

Prop 65 standards are often more stringent than federal and international standards. There are various substances that require a Prop 65 warning at levels that are far lower than federal action limits. For example, the Prop 65 standard for warnings for lead is 0.5 µg/day, which is well below the federal and international standards.

Why don't all similar products carry the warning?

- Products sold in California require Prop 65 labelling while similar products sold elsewhere do not.
- A company involved in a Prop 65 lawsuit reaching a settlement may be required to use Prop 65 warnings for its products, but other companies making similar products may have no such requirement.
- The enforcement of Prop 65 is inconsistent.
- Companies may elect not to provide warnings because they conclude that they are not required to do so under Prop 65; a lack of warnings for a product does not mean that the product is free of listed chemicals at similar levels.

Why does Toro include this warning?

Toro has chosen to provide consumers with as much information as possible so that they can make informed decisions about the products they buy and use. Toro provides warnings in certain cases based on its knowledge of the presence of one or more listed chemicals without evaluating the level of exposure, as not all the listed chemicals provide exposure limit requirements. While the exposure from Toro products may be negligible or well within the "no significant risk" range, out of an abundance of caution, Toro has elected to provide the Prop 65 warnings. Moreover, if Toro does not provide these warnings, it could be sued by the State of California or by private parties seeking to enforce Prop 65 and subject to substantial penalties.