Form No. 3429-174 Rev B

TORO®

Count on it.

Operator's Manual

Topdresser 1800

Workman® Heavy-Duty Utility Vehicle

Model No. 44225—Serial No. 403420001 and Up

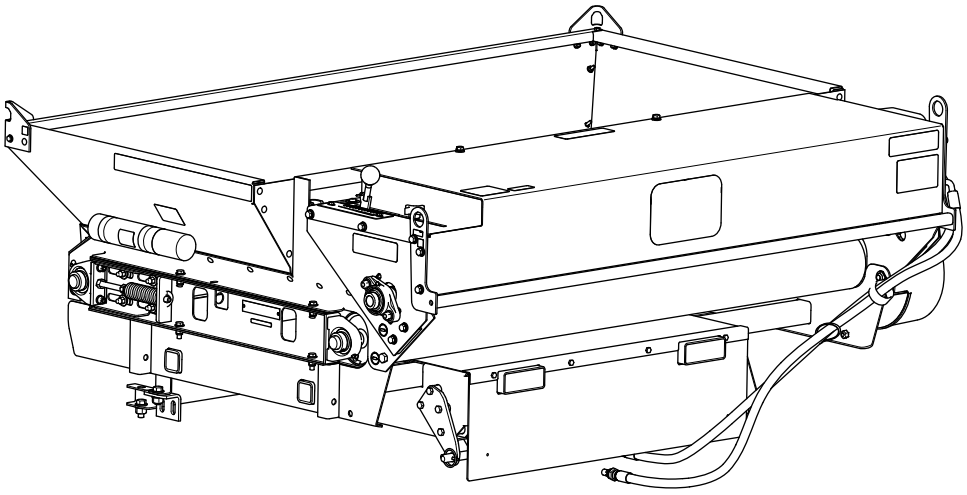

Register at www.Toro.com.
Original Instructions (EN)

CE

3429-174 B

This product complies with all relevant European directives; for details, please see the separate product specific Declaration of Conformity (DOC) sheet.

⚠ WARNING

CALIFORNIA
Proposition 65 Warning

Use of this product may cause exposure to chemicals known to the State of California to cause cancer, birth defects, or other reproductive harm.

Introduction

This machine is mounted to a Workman heavy-duty utility vehicle and is intended to be used by professional, hired operators in commercial applications. It is primarily designed for metering and dispersing materials, under a range of moisture conditions, without clogging or drastically affecting the dispersion. Using this product for purposes other than its intended use could prove dangerous to you and bystanders.

Read this information carefully to learn how to operate and maintain your product properly and to avoid injury and product damage. You are responsible for operating the product properly and safely.

Visit www.Toro.com for product safety and operation training materials, accessory information, help finding a dealer, or to register your product.

Whenever you need service, genuine Toro parts, or additional information, contact an Authorized Service Dealer or Toro Customer Service and have the model and serial numbers of your product ready. Figure 1 identifies the location of the model and serial numbers on the product. Write the numbers in the space provided.

Important: **With your mobile device, you can scan the QR code (if equipped) on the serial number plate to access warranty, parts, and other product information.**

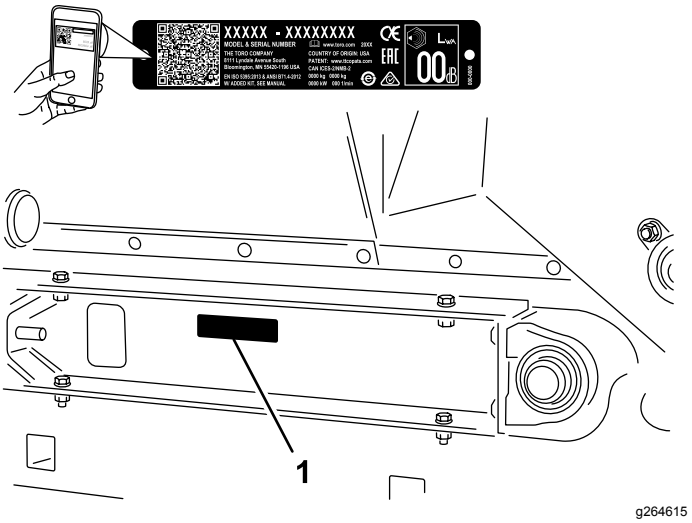

Figure 1

1. Model and serial number location

Model No. _____

Serial No. _____

This manual identifies potential hazards and has safety messages identified by the safety-alert symbol (Figure 2), which signals a hazard that may cause serious injury or death if you do not follow the recommended precautions.

g000502

Figure 2
Safety-alert symbol

This manual uses 2 words to highlight information. **Important** calls attention to special mechanical information and **Note** emphasizes general information worthy of special attention.

© 2019—The Toro® Company
8111 Lyndale Avenue South
Bloomington, MN 55420

Contact us at www.Toro.com.
Printed in the USA
All Rights Reserved

Contents

Safety 3
General Safety 3
Safety and Instructional Decals 4
Setup 6
1 Removing the 2/3 or Full Bed 7
2 Mounting the Topdresser 7
3 Connecting the Lift Cylinders 9
4 Using the Bed Support 10
5 Connecting the Hydraulic Couplers 11
Product Overview 13
Controls 13
Specifications 14
Dimensions and Weights 14
Attachments/Accessories 14
Before Operation 14
Before Operation Safety 14
During Operation 15
During Operation Safety 15
Operating the Machine 16
Loading the Hopper 17
Sand Application Rate 18
Sand Precautions 18
Preparing for Cold Weather Operation 18
After Operation 19
After Operation Safety 19
Maintenance 20
Maintenance Safety 20
Recommended Maintenance Schedule(s) 20
Pre-Maintenance Procedures 20
Preparing for Maintenance 20
Lubrication 20
Grease Specification 20
Greasing the Bearings and Bushings 20
Belt Maintenance 21
Tensioning the Conveyor-Belt Chain 21
Tensioning the Conveyor Belt 22
Replacing the Conveyor Belt 22
Hydraulic System Maintenance 26
Hydraulic System Safety 26
Checking the Hydraulic Lines and Hoses 26
Brush Maintenance 26
Checking the Brush for Position and Wear 26
Adjusting the Brush Position 26
Cleaning 27
Washing the Machine 27
Storage 28
Storage Safety 28
Preparing the Machine for Storage 28
Troubleshooting 29

Safety

General Safety

This product is capable of amputating hands and feet and of throwing objects.

- Read and understand the contents of both this *Operator's Manual* and the operator's manual of the Workman vehicle before using this machine. Ensure that everyone using this product knows how to use this machine and the Workman vehicle and understands the warnings.
- Use your full attention while operating the machine. Do not engage in any activity that causes distractions; otherwise, injury or property damage may occur.
- Do not put your hands or feet near moving components of the machine.
- Do not operate the machine without all guards and other safety protective devices in place and functioning properly on the machine.
- Keep bystanders and children out of the operating area. Never allow children to operate the machine.
- Stop the machine, shut off the engine, remove the key (if equipped), and wait for all movement to stop before you leave the operator's position, Allow the machine to cool before adjusting, servicing, cleaning, or storing it.

Improperly using or maintaining this machine can result in injury. To reduce the potential for injury, comply with these safety instructions and always pay attention to the safety-alert symbol ⚠, which means Caution, Warning, or Danger—personal safety instruction. Failure to comply with these instructions may result in personal injury or death.

Safety and Instructional Decals

Safety decals and instructions are easily visible to the operator and are located near any area of potential danger. Replace any decal that is damaged or missing.

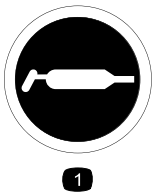

decal58-6520

58-6520

1. Grease

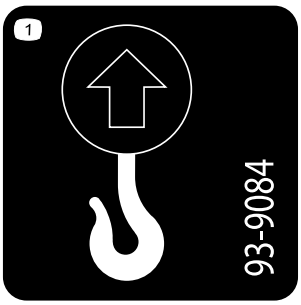

decal93-9084

93-9084

1. Lift point
2. Tie-down point

decal93-9529

93-9529

1. 95 kg (209 lb)

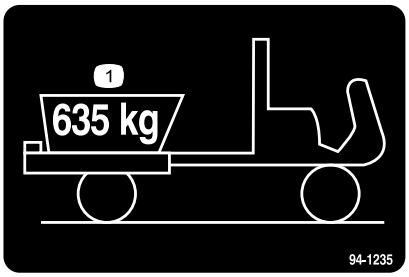

decal94-1235

94-1235

1. The maximum load is 635 kg.

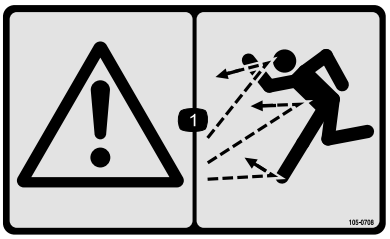

decal105-0708

105-0708

1. Warning—thrown object hazard

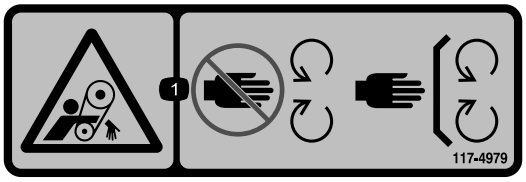

decal117-4979

117-4979

1. Entanglement hazard, belt—keep away from moving parts; keep all guards and shields in place.

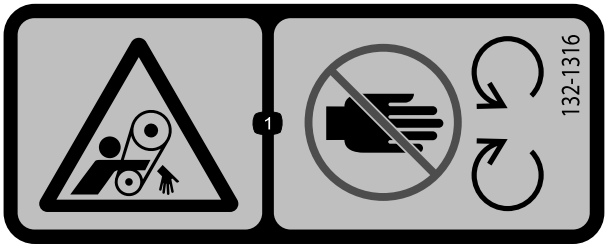

decal132-1316

132-1316

1. Entanglement hazard, belt—keep away from moving parts.

decal133-8061

133-8061

decal138-5940

138-5940

1. Entanglement hazard of the arm—keep bystanders away; do not carry passengers.

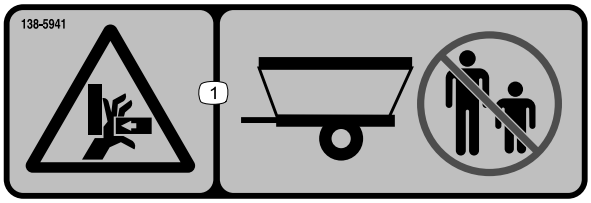

decal138-5941

138-5941

1. Crushing hazard of hand—keep bystanders away.

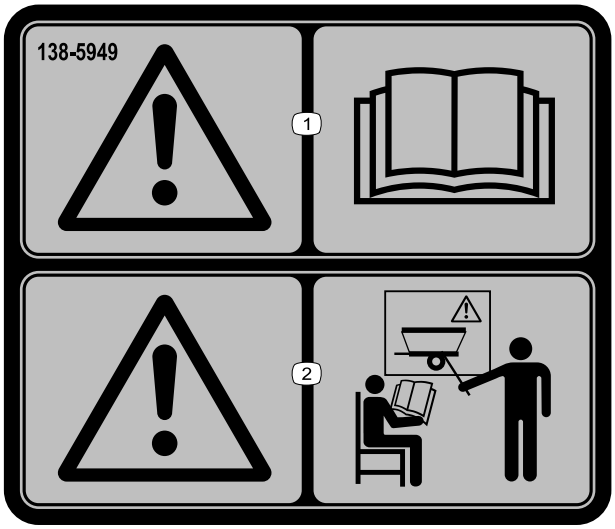

decal138-5949

138-5949

1. Warning—read the *Operator's Manual*.
2. Warning—receive training before operating the machine.

Setup

Loose Parts

Use the chart below to verify that all parts have been shipped.

Procedure	Description	Qty.	Use
1	No parts required	–	Remove the 2/3 or full bed.
2	Attachment bracket Clevis pin Lynch pin Cap screw (1/2 x 1 inch) Flat washer Locknut (1/2 inch) Spacer mount	2 2 4 4 8 4 2	Mount the topdresser.
3	Cylinder pin Cap screw (1/4 x 3/4 inch) Locknut (1/4 inch)	2 2 2	Connect the lift cylinders.
4	Bed support (supplied with the Workman vehicle)	–	Using the bed support.
5	No parts required	–	Connect the hydraulic couplers.

Media and Additional Parts

Description	Qty.	Use
Operator's Manual	1	Read before operating.

1

Removing the 2/3 or Full Bed

No Parts Required

Procedure

Lift equipment capacity: 150 kg (330 lb)

Note: If the Workman vehicle is equipped with a H.D. Hitch Frame, you do not need to remove it from the vehicle but you must subtract the weight of the hitch frame from the payload capacity of the hopper; refer to the Workman *Operator's manual*.

1. Park the Workman vehicle on a level surface and engage the parking brake.
2. Start the engine and move the hydraulic lift lever to lower the bed until the cylinders are loose in the bed slots.
3. Release the lift lever, shut off the engine, remove the key, and wait for all moving parts to stop before leaving the operator's position.
4. Remove the lynch pins from the outer ends of the cylinder rod-clevis pins (Figure 3).

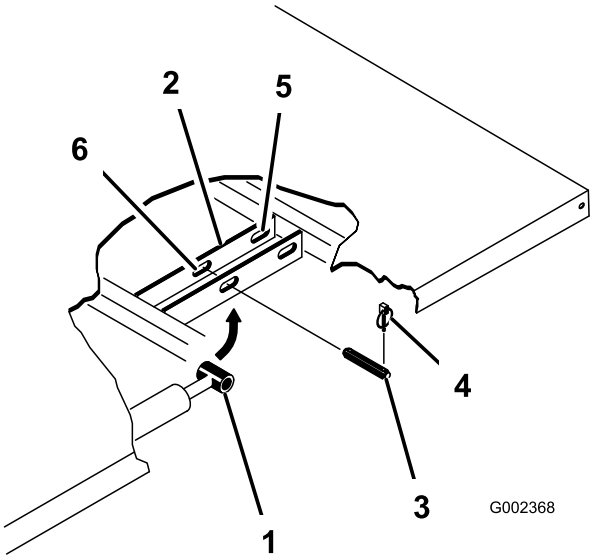

g002368

Figure 3

1. Cylinder rod end
2. Bed mounting plate
3. Clevis pin
4. Lynch pin
5. Rear slots (Full bed)
6. Front slots (2/3 bed)

5. Remove the clevis pins securing the cylinder rod ends to the bed mounting plates by pushing the pins toward the inside (Figure 4).
6. Remove the lynch pins and clevis pins securing the pivot brackets to the frame channels (Figure 4).

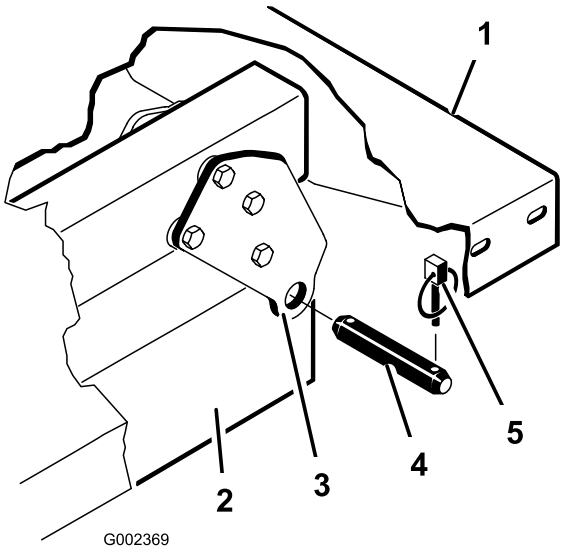

g002369

Figure 4

1. Left rear corner of bed
2. Frame channel (Workman vehicle)
3. Pivot plate
4. Clevis pin
5. Lynch pin

7. Lift the bed off of the Workman vehicle.

   Important: **The full bed weighs approximately 148 kg (325 lb), so do not try to install or remove it by yourself.**

   Use an overhead hoist or get the help of 2 or 3 other people.
8. Store the cylinders in the storage clips.
9. Engage the hydraulic lift lock lever on the Workman vehicle.

   Important: **Engaging the hydraulic lift lock lever prevents you from accidentally extending of the lift cylinders.**

2

Mounting the Topdresser

Parts needed for this procedure:

2	Attachment bracket
2	Clevis pin
4	Lynch pin
4	Cap screw (1/2 x 1 inch)
8	Flat washer
4	Locknut (1/2 inch)
2	Spacer mount

Procedure

Lift equipment capacity: 370 kg (816 lb)

1. Remove the 2 flange-head cap screws and flange locknuts securing rear of each engine frame mounting bracket to the side of each frame of the Workman vehicle (Figure 5).

   Note: If the Workman vehicle is equipped with a H.D. Hitch Frame, the attachment mount brackets (steps 1 and 2) are factory installed, proceed to step 3.

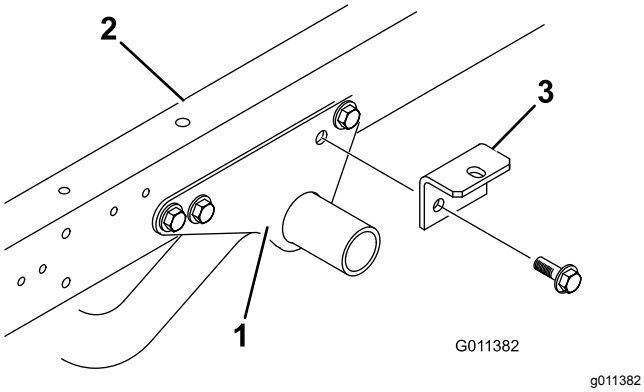

Figure 5

1. Engine frame mounting bracket
2. Frame (Workman vehicle)
3. Attachment bracket

2. Loosely secure a attachment bracket to each engine frame mounting bracket and frame of the Workman vehicle with 2 flange-head cap screws and flange locknuts that you removed in step 1 (Figure 5).

   Note: If the Workman vehicle is equipped with a H.D. Hitch Frame, install the spacer mounts, steps 3 and 4, otherwise proceed to step 6.

3. Remove the cap screw, 2 flat washers, and locknut securing each attachment bracket to hitch frame tabs (Figure 6).

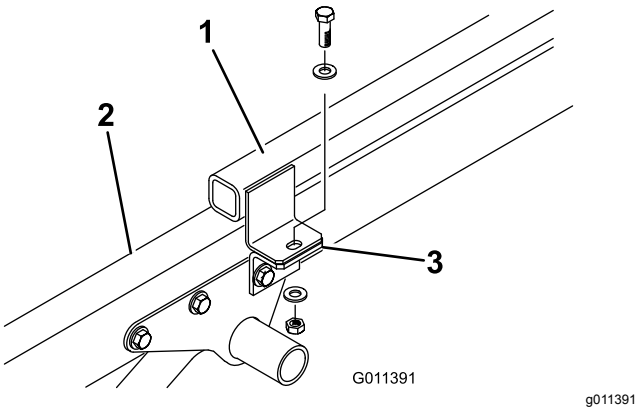

Figure 6

1. Hitch frame tab
2. Frame (Workman vehicle)
3. Attachment frame

4. Secure a spacer mount to top of each hitch frame tab with the cap screw, 2 flat washers, and locknut previously removed (Figure 7).

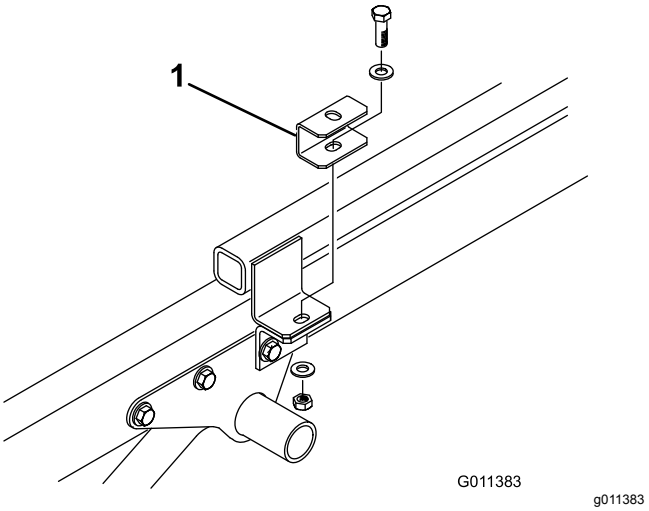

Figure 7

1. Spacer mount

5. Lift the machine as follows:
   - If you are using a forklift to lift the topdresser, insert the forks through the lift tubes (Figure 8) at the rear flap.

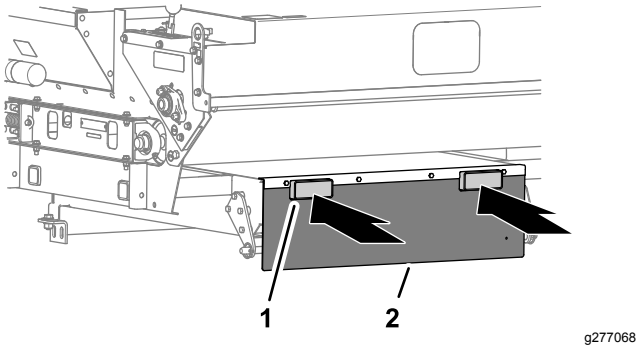

Figure 8

1. Lift tube
2. Rear flap

- If you are using the optional Lift Assembly Kit (92-4452) to lift the topdresser, proceed as follows:
  A. Place the lift bracket on top of hopper.
  B. Attach the chains to lift eyes at each corner of hopper.

  Important: **When you remove the TopDresser, *always* remove the mounting bolts and pins before lifting the machine.**

6. Position the machine onto the frame of the Workman vehicle, aligning the holes in the rear mounting brackets with the holes in each side of the frame (Figure 7).
7. Secure each rear mounting bracket to the frame of the Workman vehicle with a clevis pin and 2 lynch pins (Figure 9).

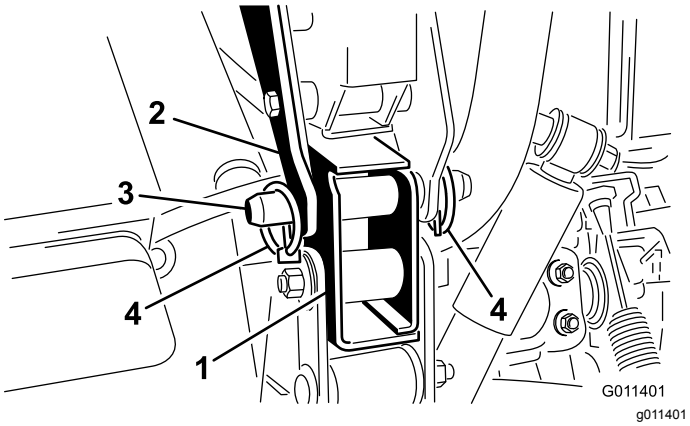

Figure 9

1. Frame bracket (Workman vehicle)
2. Mounting brackets
3. Clevis pin
4. Lynch pin

8. Loosely secure the top of each attachment bracket (Figure 10) or spacer mount (Figure 11) to the mounting tab on each side of the topdresser with a 1/2 x 1 inch cap screw, 2 flat washers, and locknut. Tighten all fasteners.

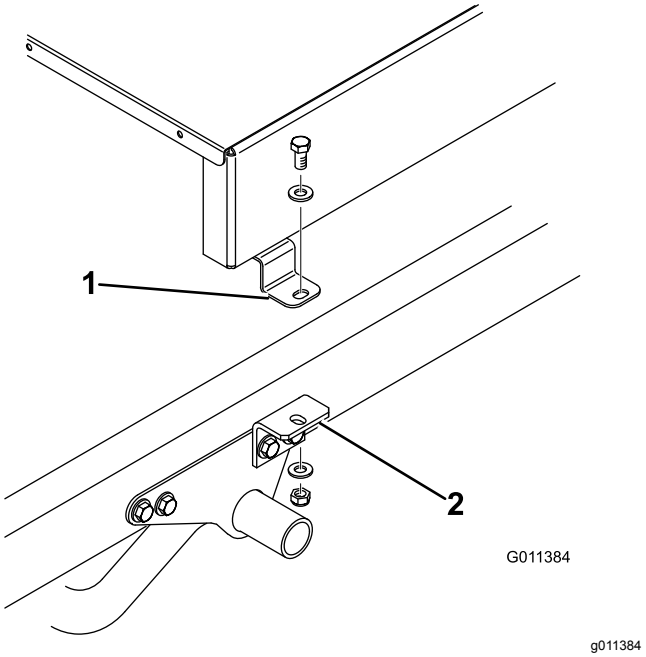

Figure 10

1. Topdresser mounting tab
2. Attachment bracket

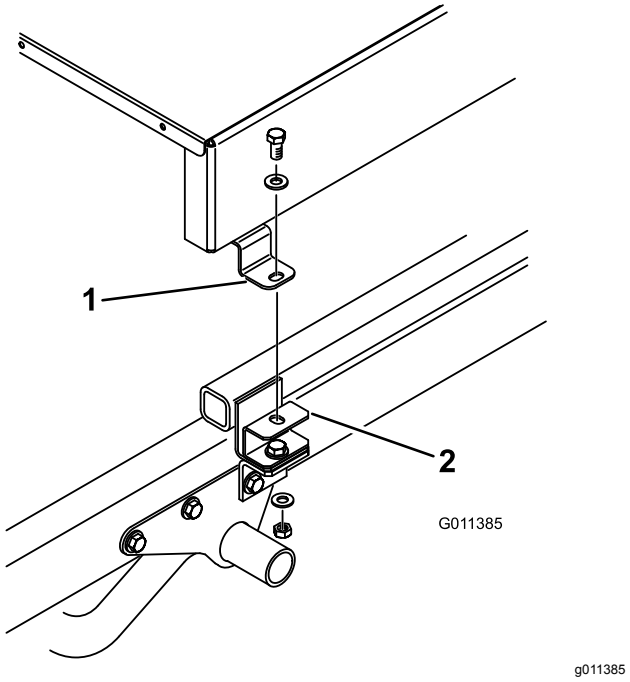

Figure 11

1. Topdresser mounting tab
2. Spacer mount

3

Connecting the Lift Cylinders

Parts needed for this procedure:

2	Cylinder pin
2	Cap screw (1/4 x 3/4 inch)
2	Locknut (1/4 inch)

Procedure

1. Secure each lift cylinder rod end to topdresser base with a cylinder pin (Figure 12).
2. Secure each cylinder pin to the topdresser base with a cap screw (1/4 x 3/4 inch), a flat washer, and a nut (Figure 12).

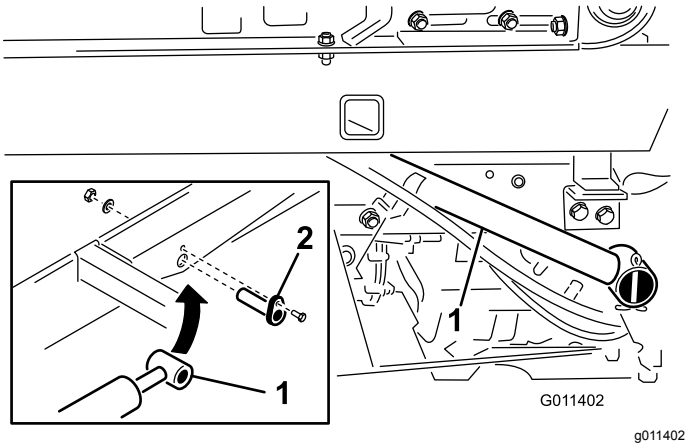

Figure 12

1. Cylinder rod
2. Cylinder pin

Important: **Always unlock the dump stop lever before attempting to attach the cylinder for tilting. Use the tilt of the cylinders only for service of the engine or hydraulics underneath.**

⚠ WARNING

Failure to properly support the topdresser when performing service could result in serious personal injury.

Do not rely on the cylinders to hold up the machine. Block the topdresser up before going underneath to perform any type of service.

Important:
On Workman vehicles with serial numbers 240000001 and up, the bed or topdresser cannot be raised unless the lift cylinder hoses are connected to the vehicle.

⚠ CAUTION

Failure to follow the proper procedures for tilting the hopper of the topdresser could cause serious injury.

- **Remove the front mounting bolts before tilting the hopper.**
- **Tilt the hopper only when the hopper is empty.**

4

Using the Bed Support

Parts needed for this procedure:

–	Bed support (supplied with the Workman vehicle)

Procedure

Important: **Always install or remove the bed support from the outside of the bed.**

1. Raise the bed until the lift cylinders are fully extended.
2. Remove the bed support from the storage brackets at the back of the ROPS panel (Figure 13).

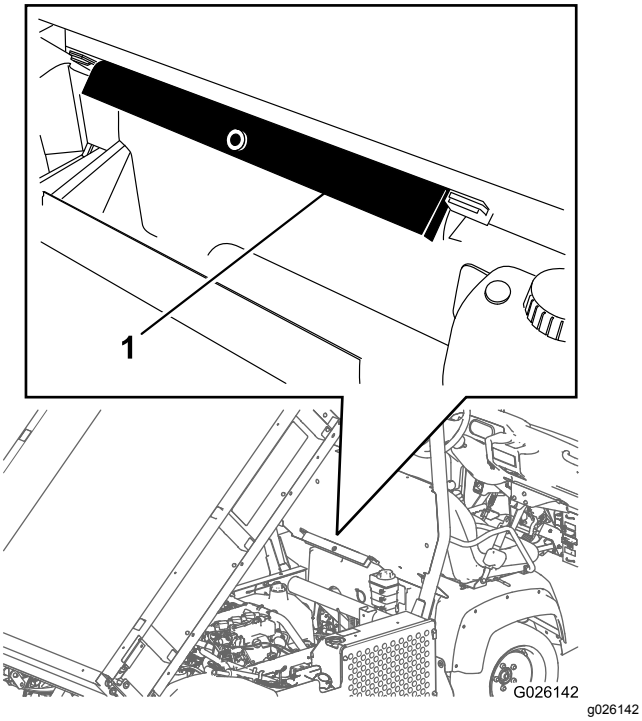

Figure 13

1. Bed support

3. Push the bed support onto the cylinder rod, and ensure that the support end tabs rest on the end of the cylinder barrel and cylinder-rod end (Figure 14).

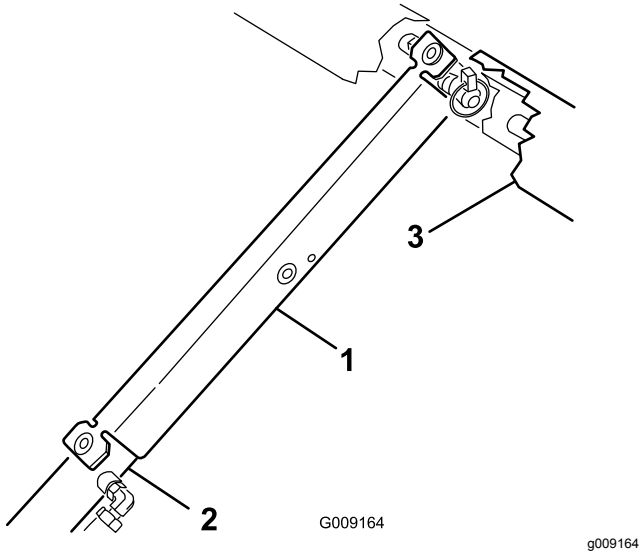

Figure 14

1. Bed support
2. Cylinder barrel
3. Bed

4. When you are finished, remove the bed support from the cylinder, and insert it into the storage brackets at the back of the ROPS panel.

   Important: **Do not try to lower the bed with the bed support on the cylinder.**

5

Connecting the Hydraulic Couplers

No Parts Required

Preparing the Machine

⚠ WARNING

Hydraulic fluid escaping under pressure can penetrate skin and cause injury.

- **Seek immediate medical attention if fluid is injected into skin. Injected fluid must be surgically removed within a few hours by a doctor.**
- **Ensure that all hydraulic-fluid hoses and lines are in good condition and all hydraulic connections and fittings are tight before applying pressure to the hydraulic system.**
- **Keep your body and hands away from pin-hole leaks or nozzles that eject high-pressure hydraulic fluid.**
- **Use cardboard or paper to find hydraulic leaks.**
- **Safely relieve all pressure in the hydraulic system before performing any work on the hydraulic system.**

1. Relieve hydraulic-system pressure to ease the connecting the quick couplers as follows:
   - If your Workman vehicle is serial number 239999999 and before, move the remote hydraulic valve handle (Figure 15) to the float position.

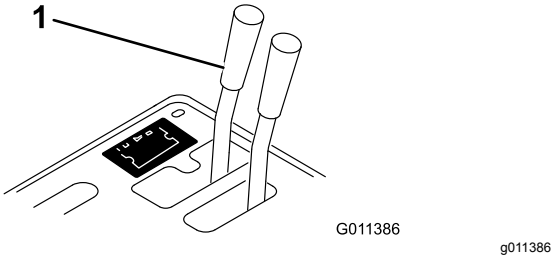

Figure 15

1. Hydraulic valve handle

- If your Workman vehicle is serial number 240000001 and up, move the hydraulic lift lever (Figure 16) back and forth.

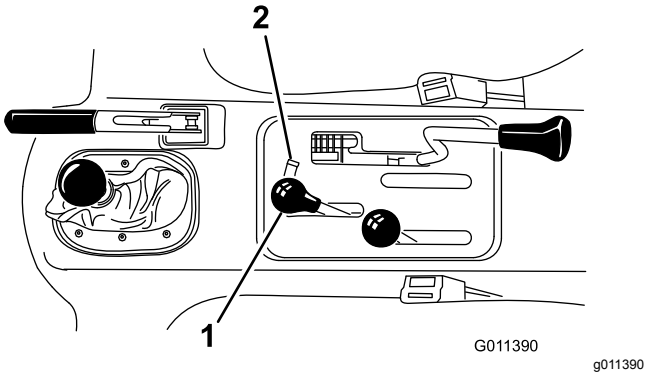

Figure 16

1. Hydraulic lift lever
2. Hydraulic lift lock

2. On vehicles with serial numbers 240000001 and up, disconnect the 2 lift-cylinder hoses from the couplers secured to the coupler bracket (Figure 17). Insert the caps into the cylinder hose quick couplers.

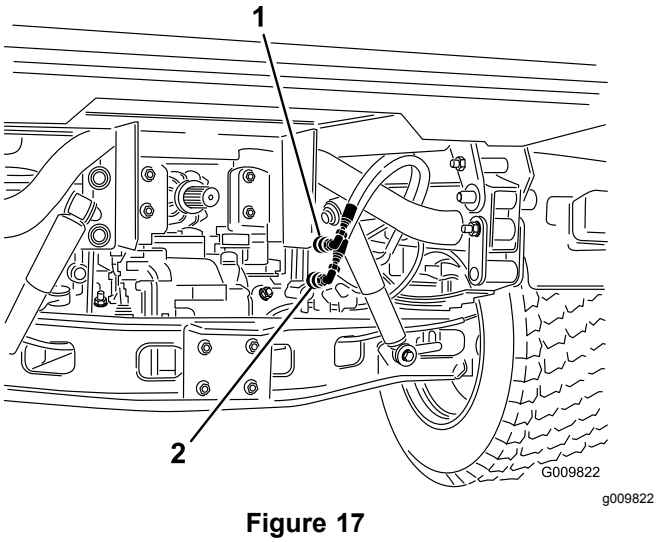

Figure 17

1. Quick coupler A position
2. Quick coupler B position

Connecting the Hoses

1. Clean any dirt from the topdresser hose quick couplers (Figure 18).

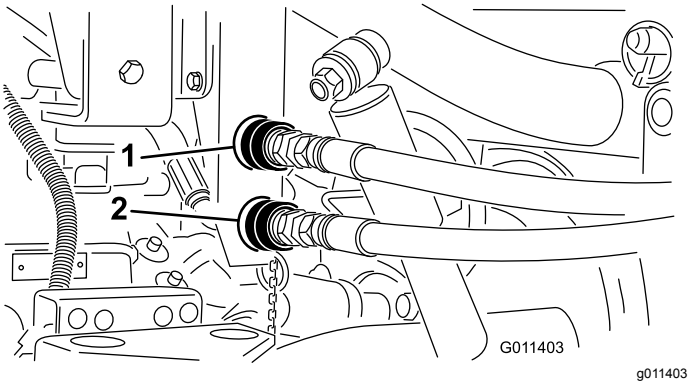

Figure 18

Quick-Coupler Panel

1. Quick coupler A position
2. Quick coupler B position

2. Attach the hoses to the quick couplers to the Workman vehicle. Ensure that both quick couplers are full engaged.

   The hoses are marked “A” and “B”, match them to the quick couplers of the Workman vehicle.

   Note: The couplers shown in Figure 18 are from vehicles with serial numbers 239999999 and before.

Checking the Hydraulic System

Hydraulic fluid specification: Dexron III automatic transmission fluid

Important: **The Workman hydraulic system operates on Dexron III automatic transmission fluid. This fluid provides gear and bearing lubrication as well as fluid for operating the hydraulic system.**

When the remote hydraulic system quick couplers are connected, hydraulic fluid flows from the machine to the vehicle. If the hydraulic fluid in the machine is not the same or equivalent to the fluid in the vehicle, component damage to the transaxle or hydraulic system may result.

1. Check the hydraulic fluid level; refer to the *Operator’s Manual* for your machine.

   Add hydraulic fluid as needed.

2. Start the vehicle engine.
3. Move the remote-hydraulics lever of the vehicle to the RUN position. The belt and brush should rotate as shown in Figure 19.

   Note: If the rotation is backward, shut off the engine, remove the hoses, swap the

quick-coupler fittings, connect the hoses to the quick-coupler panel, and repeat steps 2 and 3.

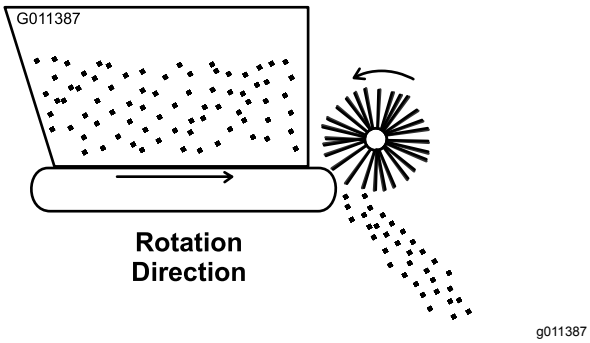

Figure 19

4. Visually inspect the hydraulic system for leaks, loose fasteners, missing parts, and improperly routed lines.

   Make all repairs before operating the machine.

   Important: **Ensure that the hoses are routed away from any moving, sharp, or hot components.**

5. Shut off the engine, remove the key, and wait for all moving parts to stop before leaving the operator's position.
6. Check the hydraulic fluid level; refer to the *Operator's Manual* for your machine.

   Add hydraulic fluid as needed.

Product Overview

Controls

Gate Metering Control

The black knobs on the left rear side of the machine are used to adjust and lock the gate into the desired open height position.

1. Loosen the locking knob (Figure 20) enough to allow it to slide freely in the slot.
2. Set the gate knob (Figure 20) into the desired position and tighten the locking knob to secure the adjustment.

Rate Scale

Use the rate scale (Figure 20) to determine the desired flow rate. Refer to Sand Application Rate (page 18).

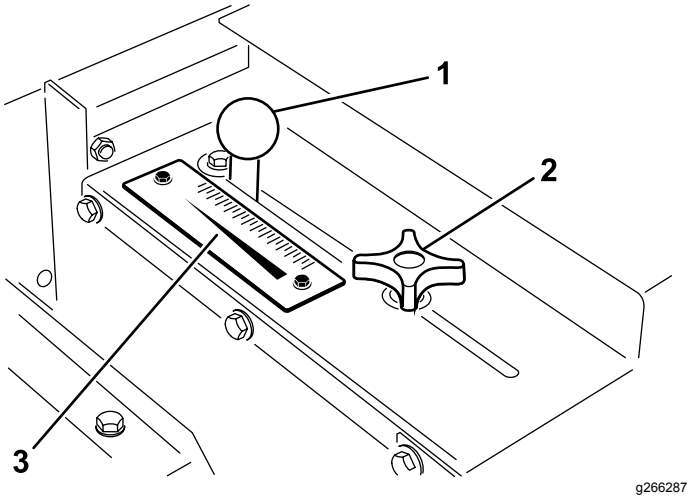

Figure 20

1. Gate adjusting knob
2. Gate locking knob
3. Rate scale

Specifications

Note: Specifications and design are subject to change without notice.

Dimensions and Weights

Length	137 cm (54 inches)
Width	185 cm (73 inches)
Spreading width	152 cm (60 inches)
Inside clear width	175 cm (69 inches)
Height, mounted on Workman vehicle	126 cm (49.5 inches)
Shipping weight	386 kg (850 pounds)
Dry weight	367 kg (808 pounds)
Hopper capacity	0.5 m^3 (18 ft^3)

Attachments/Accessories

A selection of Toro approved attachments and accessories is available for use with the machine to enhance and expand its capabilities. Contact your Authorized Service Dealer or authorized Toro distributor or go to www.Toro.com for a list of all approved attachments and accessories.

To ensure optimum performance and continued safety certification of the machine, use only genuine Toro replacement parts and accessories. Replacement parts and accessories made by other manufacturers could be dangerous, and such use could void the product warranty.

Operation

Note: Determine the left and right sides of the machine from the normal operating position.

Before Operation

Before Operation Safety

- The machine has different balance, weight, and handling characteristics compared to some other types of equipment. Read and understand the contents of this *Operator's Manual* before operating the machine. Become familiar with all controls and know how to stop quickly.
- Never allow children or untrained people to operate or service the machine. Local regulations may restrict the age of the operator. The owner is responsible for training all operators and mechanics.
- Become familiar with the safe operation of the equipment, operator controls, and safety signs.
- Stop the machine, shut off the engine, remove the key (if equipped), and wait for all movement to stop before you leave the operator's position, Allow the machine to cool before adjusting, servicing, cleaning, or storing it.
- Know how to stop the machine and shut off the engine quickly.
- Check that operator-presence controls, safety switches, and safety protective devices are attached and functioning properly. Do not operate the machine unless they are functioning properly.
- Inspect the area where you will use the machine and remove all objects that the machine could throw.
- Keep all shields and safety devices in place. If a shield, safety device, or decal is illegible or missing, repair or replace it before operating the machine.

  Note: You must use a 1/3 attachment or shield at front 1/3 area of the cargo zone for the Workman vehicle when using the topdresser.
- Tighten any loose nuts, bolts, and screws to ensure that the machine is in safe operating condition. Ensure that the machine components are in place and secure.
- Ensure that your vehicle is suitable for use with an implement of this weight by checking with your vehicle supplier or manufacturer.

During Operation

During Operation Safety

- The owner/operator can prevent and is responsible for accidents that may cause personal injury or property damage.
- Wear appropriate clothing, including eye protection; long pants; substantial, slip-resistant footwear; and hearing protection. Tie back long hair and do not wear loose clothing or loose jewelry.
- Do not operate the machine while ill, tired, or under the influence of alcohol or drugs.
- Use your full attention while operating the machine. Do not engage in any activity that causes distractions; otherwise, injury or property damage may occur.
- Do not operate the machine when tired, ill, or under the influence of alcohol or drugs.
- Keep your hands and feet out of the hopper.
- Remain seated whenever the vehicle is in motion.
- Using the machine demands attention. Failing to operate the vehicle safely may result in an accident, tip-over of the vehicle, and serious injury or death. Drive carefully, and to prevent tipping or loss of control, do the following:
  - Use extreme caution, reduce the speed, and maintain a safe distance around sand traps, ditches, water hazards, ramps, unfamiliar areas, or other hazards.
  - Reduce the speed of a loaded machine when negotiating terrain undulations to avoid causing the machine to become unstable.
  - Operate the machine only in good visibility to avoid holes or hidden hazards.
  - Look behind and down before backing up to be sure of a clear path.
  - Use care when approaching blind corners, shrubs, trees, or other objects that may obscure your vision.
  - Use caution when operating on a steep slope. Travel straight up and down slopes. Reduce speed when making sharp turns or when turning on hillsides. Avoid turning on hillsides whenever possible.
  - Use extra caution when operating on wet surfaces, at higher speeds or with a full load. Stopping time increases with a full load. Shift into a lower gear before starting up or down a hill.
  - Avoid sudden stops and starts. Do not go from reverse to forward or forward to reverse without coming to a complete stop.
  - Do not attempt sharp turns or abrupt maneuvers or other unsafe driving actions that may cause a loss of control.
  - Be aware of your surroundings when turning or backing up the machine. Ensure that the area is clear and keep all bystanders out of the operating area. Proceed slowly.
  - Slow down and use caution when making turns and crossing roads and sidewalks with the machine. Always yield the right-of-way.
  - Always watch out for and avoid low overhangs such as tree limbs, door jambs, overhead walkways, etc. Ensure that there is enough room over head to easily clear the vehicle and your head.
  - Operate the machine only in good visibility and appropriate weather conditions. Do not operate the machine when there is the risk of lightning.
  - If you are ever unsure about safe operation, stop working and ask your supervisor.
  - Do not leave the machine unattended while the vehicle is running.
- Do not carry loads that exceed the load limits of the vehicle.
- The stability of loads can vary—for example, high loads have a higher center of gravity. Reduce the maximum load limits to ensure better stability, if necessary.
- To avoid causing the machine to tip over, do the following:
  - Carefully monitor the height and weight of the load. Higher and heavier loads can increase the risk of tipping.
  - Distribute the load evenly, from front to back and side to side.
  - Be careful when turning and avoid unsafe maneuvers.
  - Always ensure that the machine is connected to the vehicle before loading.
  - Do not put large or heavy objects into the hopper. This could damage the belt and rollers. Also ensure that the load has a uniform texture. The machine can unpredictably throw small rocks in the sand.
- Before you leave the operator's position, do the following:
  - Park the machine on a level surface.
  - Shut off hydraulic control to the machine.
  - Engage the parking brake.
  - Shut off the engine and remove the key (if equipped).
  - Wait for all movement to stop.

- Do not stand behind the machine when unloading.
- Unload the topdresser or disconnect it from the vehicle only while on a level surface.
- Shut off the attachment when approaching people, vehicles, vehicle crossings, or pedestrian crossings.

Slope Safety

- Review the vehicle specifications to ensure that you do not exceed its slope capabilities.
- Slopes are a major factor related to loss of control and rollover accidents, which can result in severe injury or death. The operator is responsible for safe slope operation. Operating the machine on any slope requires extra caution.
- The operator must evaluate the site conditions to determine if the slope is safe for machine operation including surveying the site. Always use common sense and good judgment when performing this survey.
- The operator must review the slope instructions listed below for operating the machine on slopes. Consider the operating conditions on that day to determine whether to use the machine at the site. Changes in the terrain can result in a change in slope operation for the machine.
- Avoid starting, stopping, or turning the machine on slopes. Avoid making sudden changes in speed or direction. Make turns slowly and gradually.
- Do not operate a machine under any conditions where traction, steering, or stability is in question.
- Remove or mark obstructions such as ditches, holes, ruts, bumps, rocks, or other hidden hazards. Tall grass can hide obstructions. Uneven terrain could overturn the machine.
- Be aware that operating the machine on wet grass, across slopes, or downhill may cause the machine to lose traction. Loss of traction to the drive wheels may result in sliding and a loss of braking and steering.
- Use extreme caution when operating the machine near drop offs, ditches, embankments, water hazards, or other hazards. The machine could suddenly roll over if a wheel goes over the edge or the edge caves in. Establish a safety area between the machine and any hazard.

Operating the Machine

1. Sit on the seat and engage the parking brake.
2. Disengage the PTO (if so equipped) and move hand throttle lever to OFF position (if so equipped).
3. Place the remote hydraulic-valve handle for the Workman vehicle in the OFF position.
4. Set the transmission as follows:
   - If your Workman vehicle has a manual transmission, move the shift lever to the NEUTRAL position and press the clutch lever.
   - If your Workman vehicle has a automatic transmission, move the shift lever to the PARK position.
5. Insert the key and rotate it clockwise to start the engine. Release the key when the engine starts.
6. Practice starting, driving, and stopping the Workman vehicle. Always read and understand the *Operator's Manual* for the Workman vehicle before using this machine.
7. Check for smooth operation of belt before adding material in the hopper.
8. Place sand or other topdressing material in the hopper. The maximum volume of material that can be put into the hopper is 0.5 m^3 (18 ft^3). Generally, sand weighs 1.6 kg/L (100 lb / ft^3) and could overload the Workman vehicle if more than 635 to 680 kg (1400 to 1500 lb) are loaded into the hopper.

   Important: **When any other attachments, such as the H.D. Hitch frame, are installed on the Workman vehicle while using the topdresser, the weight of those attachments must be subtracted from the payload capacity of the hopper.**

   A method for determining the total weight of your attachments would be to place the rear tires on a scale. **The maximum weight capacity of the rear axle of the Workman 3000/4000 series vehicle is 1179 kg (2600 lb) and 1372 kg (3025 lb) for the Workman HD series vehicle.**

⚠ DANGER

Heavy loads increase stopping distance and reduce your ability to turn quickly without tipping over.

Transporting or topdressing with a full load can cause shifting of the sand. This shifting happens most often while turning, going up or down hills, suddenly changing speeds or while driving over rough surfaces. Shifting loads can lead to tipovers.

Use caution when transporting or topdressing with a full load.

As a general rule, position the weight of the load evenly from front to rear and evenly from side to side.

Never tilt the topdresser bed for maintenance with any material in the hopper. Tilt the topdresser bed only when the hopper is empty.

9. Transport to the area to be topdressed.
10. Adjust the metering gate to the desired rate. Lock into position with the black knob.
11. Move the shift lever into LO range position. Select the desired forward speed and begin moving. Refer to Sand Application Rate (page 18).
12. On vehicles with serial numbers prior to 239999999, pull the remote hydraulic lever back to the RUN position. On vehicles with serial numbers 240000001 and up, lock the hydraulic lift lever in the forward position; the machine is now topdressing.

Loading the Hopper

1. Use the preload weight worksheet to calculate the weight of the operator, passenger (if present), and machine:

Preload Weight Worksheet

Weight of Operator	_____	kg	_____	(lb)
Weight of Passenger (if present)	**(+)** _____	kg	**(+)** _____	(lb)
Machine Dry Weight	**(+)** 367	kg	**(+)** 808	(lb)
Preload Weight	**(=)** _____	kg	**(=)** _____	(lb)

2. Use then hopper material load worksheet to calculate the weight of the material you can load into the hopper:

   Note: Generally, dry sand weighs 1602 kg/m³ (100 lb/ft³) and wet sand weighs 1922 to 2082 kg/m³ (120 to 130 lb/ft³).

   Note: The maximum material volume of the hopper is 0.5 m³ (0.67 yd³).

Hopper Material Load Worksheet

Workman Vehicle Rated Capacity	_____	kg	_____	(lb)
Preload Weight	**(-)** _____	kg	**(-)** _____	(lb)
Hopper Material Load	**(=)** _____	kg	**(=)** _____	(lb)

3. Distribute the material evenly in the hopper from front to rear and evenly from side to side.

Important: **Transporting or topdressing with a full load can cause shifting of the sand. This shifting happens most often while turning, going up or down hills, suddenly changing speeds or while driving over rough surfaces. Shifting loads can lead to tip-overs. Use caution when transporting or topdressing with a full load.**

Important: **Heavy loads increase stopping distance and reduce your ability to turn quickly without tipping over.**

Sand Application Rate

The rate of sand applied depends on the gate setting and the gear/range setting. Sand varies in moisture and coarseness (size of grain) which affects the rate. These factors must be taken into consideration when deciding the amount of sand required for the application. Test a small area to decide the correct amount. To increase the application rate, either open the gate to a higher scale mark or shift the Workman vehicle to a lower gear.

Note: On vehicles with serial numbers 240000001 and up, the sand application rate decreases when you turn the vehicle. Avoid making sharp turns when topdressing.

To ensure consistent application, from green to green, use the tachometer and/or hand throttle to maintain constant engine speed while topdressing.

⚠ WARNING

Tipping or rolling the vehicle on a hill will cause serious injury.

If the engine stalls or you lose headway on a hill, never attempt to turn the vehicle around.

Always back straight down a hill in reverse gear.

Do not back down in neutral or with the clutch pressed, using only the brakes.

Never add sideboards or panels to the top of the hopper to increase the load capacity. The additional weight will cause tipping or rolling of the vehicle and lead to serious injury.

Do not drive across a hill: drive up and down the hill. Avoid turning on a hill. Do not accelerate or decelerate fast. A sudden change in speed can initiate a tipover.

Sand Precautions

The machine is equipped with a flexible gate edge (Figure 21) and a spring release mechanism to reduce the chance of sand chunks or rocks getting lodged during operation. To ensure long belt life, sift or check the sand for rocks with sharp edges that may damage conveyor belt.

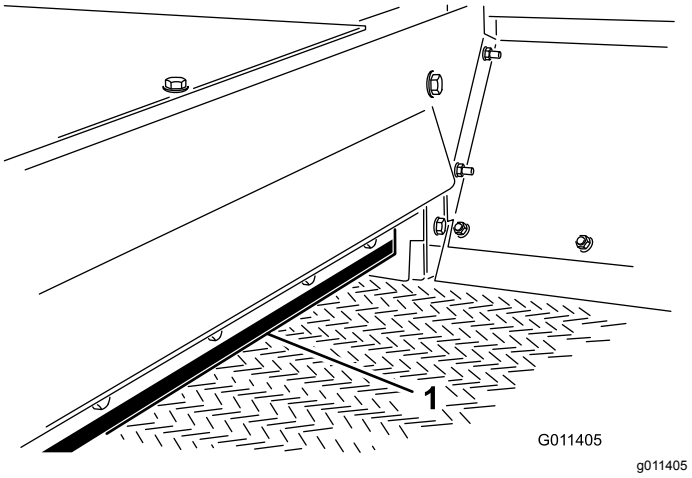

Figure 21

1. Gate edge

Preparing for Cold Weather Operation

You may use the machine in cold weather. With certain limitations, you may use the machine to apply a salt/sand mixture on pavement for ice control. The PVC conveyor belt material becomes very stiff in cold weather and requires more power to operate belt. The life of the belt is reduced by approximately 50% when operated below temperatures of 40° F. (5° C).

Important: **Do not operate the topdresser during temperatures of -7° C (20° F) or lower.**

1. Increase the belt tension by adjusting spring compression to 101 mm (4 inches); refer to Tensioning the Conveyor-Belt Chain (page 21).
2. Run belt before loading the hopper with material to assure that belt system moves freely.

   Important: **If belt/drive roller slip, damage to belt or roller may occur.**

Important: **Before operating the machine during warm weather, adjust the belt tension to 112 mm (4-7/16 inches) spring compression.**

After Operation

After Operation Safety

- Stop the machine, shut off the engine, remove the key (if equipped), and wait for all movement to stop before you leave the operator's position, Allow the machine to cool before adjusting, servicing, cleaning, or storing it.
- Shut off hydraulic control to the machine whenever you are transporting or not using the it.
- Keep all parts of the machine in good working condition and all hardware tightened.
- Replace all worn, damaged, or missing decals.

Maintenance

Note: Determine the left and right sides of the machine from the normal operating position.

Note: Download a free copy of the electrical or hydraulic schematic by visiting www.Toro.com and searching for your machine from the Manuals link on the home page.

Maintenance Safety

- Before you leave the operator's position, do the following:
  - Park the machine on a level surface.
  - Shut off hydraulic control to the machine.
  - Engage the parking brake.
  - Shut off the engine and remove the key (if equipped).
  - Wait for all movement to stop.
- Allow machine components to cool before performing maintenance.
- Perform only those maintenance instructions described in this manual. If major repairs are ever needed or assistance is desired, contact an authorized Toro distributor.
- Ensure that the machine is in safe operating condition by keeping nuts, bolts, and screws tight.
- If possible, do not perform maintenance while the engine is running. Keep away from moving parts.
- Do not check or adjust the chain tension when the vehicle engine is running.
- Carefully release pressure from components with stored energy.
- Support the machine with jack stands whenever you work under the machine.
- After maintaining or adjusting the machine, ensure that all guards are installed.
- Keep all parts of the machine in good working condition and all hardware tightened.
- Replace all worn or damaged decals.
- To ensure safe, optimal performance of the machine, use only genuine Toro replacement parts. Replacement parts made by other manufacturers could be dangerous, and such use could void the product warranty.

Recommended Maintenance Schedule(s)

Maintenance Service Interval	Maintenance Procedure
Before each use or daily	• Check the hydraulic lines and hoses.
Every 40 hours	• Check the brush position and wear.
Every 200 hours	• Lubricate all the grease fittings.

Pre-Maintenance Procedures

Preparing for Maintenance

1. Shut off the machine by doing the following:
   - 239999999 and before, move the remote hydraulic valve handle to the OFF position.
   - 240000001 and up, move the hydraulic lift lever to the OFF position.
2. Move the machine to a level surface.
3. Set the parking brake of the Workman vehicle, shut off the engine, remove the key, and wait for all moving parts to stop before leaving the operator's seat.

Lubrication

Grease Specification

No. 2 Lithium based grease

Greasing the Bearings and Bushings

Service Interval: Every 200 hours/Yearly (whichever comes first)

1. Perform the steps in Preparing for Maintenance (page 20).
2. Lubricant each of the grease fitting described in the grease-fitting table with the specified grease.

Grease-Fitting Table

Location	Quantity
Roller shaft bearing (Figure 22)	4
Brush shaft bearing (Figure 22)	1

Important: **Lubricate the bearings to maintain a slight leakage between bearings and housings. Too much grease can cause overheating or damage to seals.**

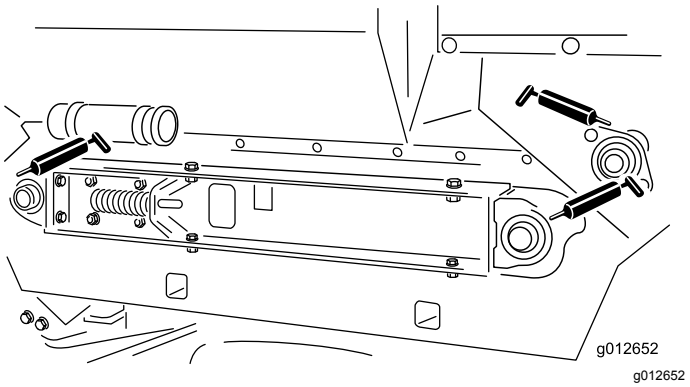

Figure 22

Note: Do not lubricate the drive chains unless they become stiff from rust. If the chain rusts, lightly lubricate it with a dry-type lubricant. This reduces the likelihood of sand build-up or other top-dressing material adhering to the chain.

Belt Maintenance

Tensioning the Conveyor-Belt Chain

1. Perform the steps in Preparing for Maintenance (page 20).
2. Remove the chain cover (Figure 23).

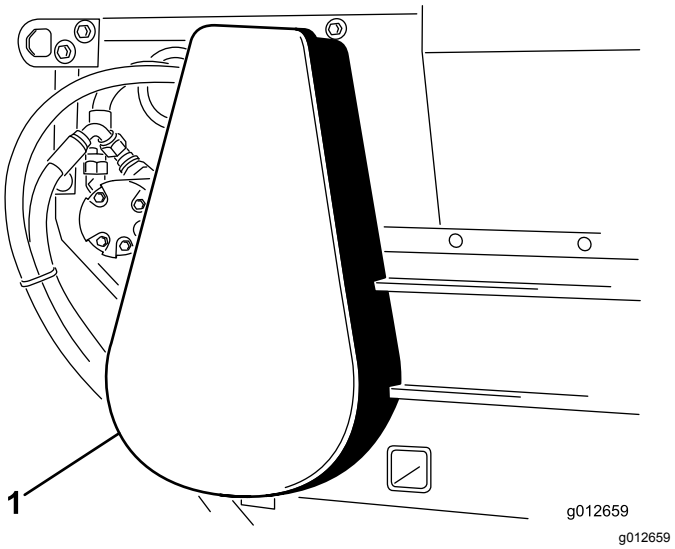

Figure 23

1. Chain cover

3. Loosen bolts and nuts that secure the motor and sprocket assembly to the main frame (Figure 24).
4. Rotate motor and sprocket assembly (Figure 24) in mounting slots until the conveyer-belt chain deflects 3.2 mm (1/8 inch).

   Important: **Do not over tension the chain or it will wear prematurely. Do not under-tension the chain or it will cause sprocket wear.**

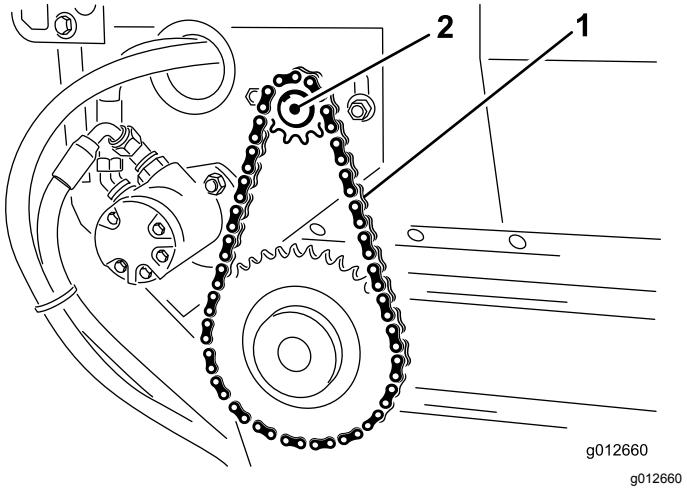

Figure 24

1. Conveyer-belt chain
2. Motor and sprocket assembly

5. Tighten mounting bolts (Figure 24).
6. Install chain cover (Figure 23).

Tensioning the Conveyor Belt

When conveyor belt is adjusted properly, the compressed length of each compression spring should be 112 mm (4-7/16 inches). Adjust conveyor belt as follows:

1. Empty the hopper.
2. Perform the steps in Preparing for Maintenance (page 20).
3. Loosen rear jam nut (Figure 25).

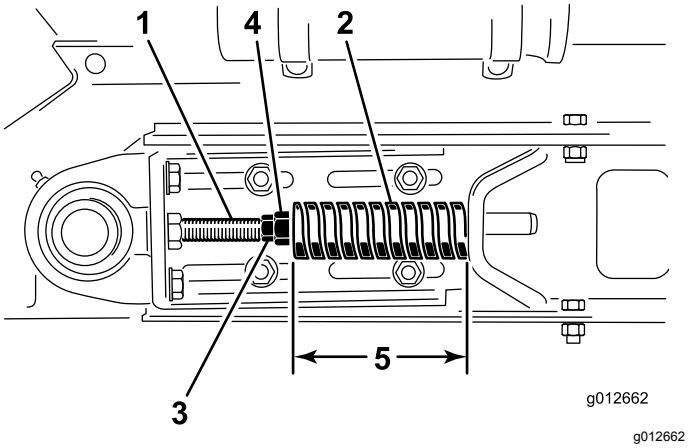

Figure 25

1. Tension rod
2. Compression spring
3. Jam nut (forward)
4. Jam nut (rear)
5. Spring compression 112 mm (4-7/16 inches)

4. Adjust forward jam nut to compression spring to 112 mm (4-7/16 inches).
5. Tighten jam rear nut.
6. Repeat steps 3 through 5 at the other side of the machine.
7. Measure the distance between center points of the belt-roller shafts at each side of machine to ensure that the measurements are equal (Figure 26).

   Equal distance measures approximately 895 mm (35-1/4 inches).

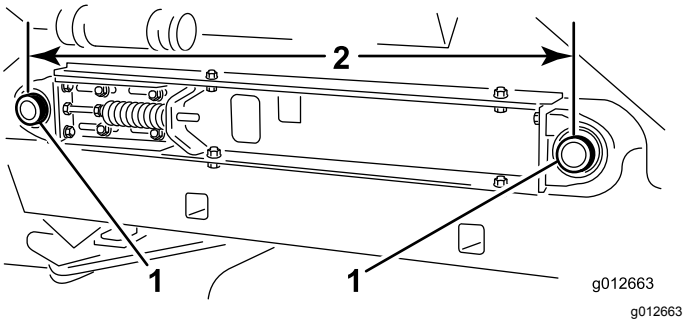

Figure 26

1. Belt-roller shafts
2. 895 mm (35-1/4 inches)

Replacing the Conveyor Belt

Preparing to Machine

1. Empty the hopper.
2. Perform the steps in Preparing for Maintenance (page 20).
3. Inspect hopper seals and gate edge for wear or torn edges (Figure 27).

   Replace worn or damaged components to ensure proper operation of new conveyor belt.

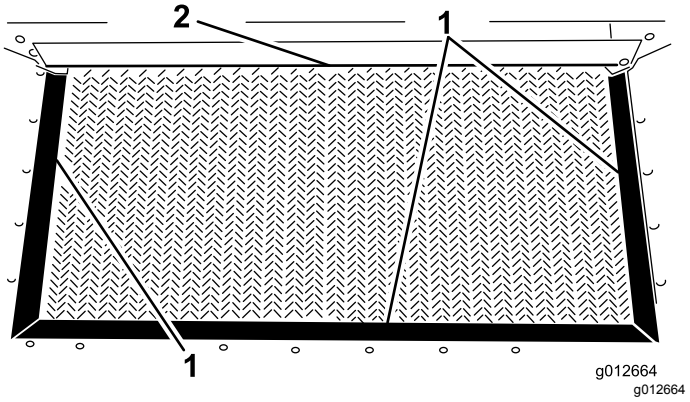

Figure 27

1. Hopper seal
2. Gate edge

Removing the Conveyer Chain

1. Remove chain cover (Figure 28).

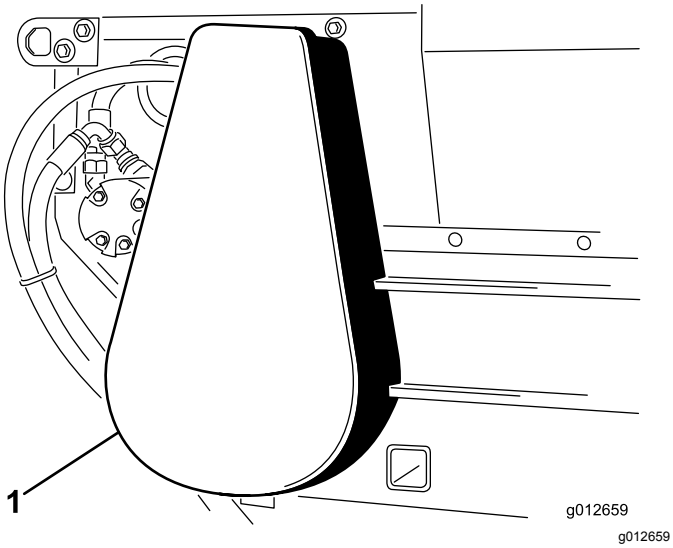

Figure 28

1. Chain cover

2. Remove master link from chain and remove chain from small sprocket (Figure 29).

   If needed, loosen the motor-mount bolts to remove the master link.

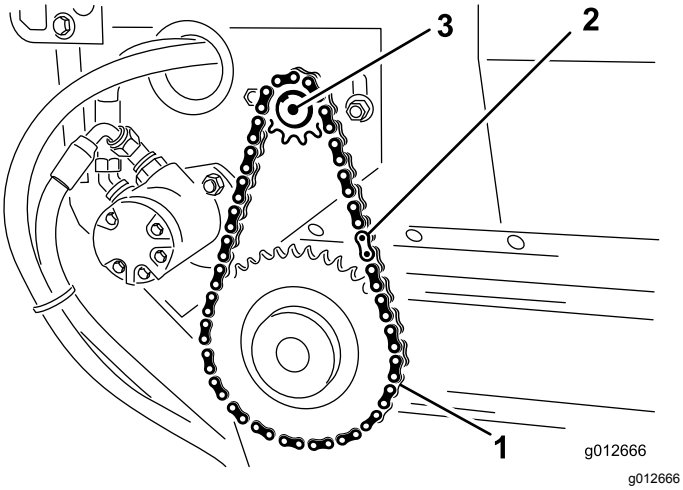

Figure 29

1. Drive chain
2. Master link
3. Motor

Disassembling the Slider Bed

1. Loosen forward and rear jam nuts on tension rod to release spring tension (Figure 30).

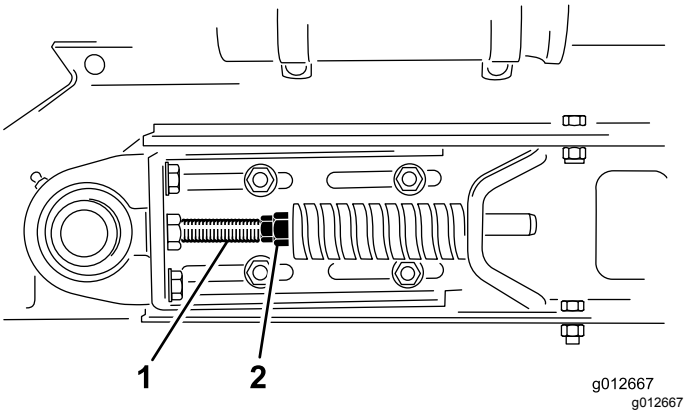

Figure 30

1. Tension rods
2. Jam nut

2. At each side of machine, remove 2 capscrews, 2 washers, and 2 locknuts that secure the hopper to slider-frame rails (Figure 31).

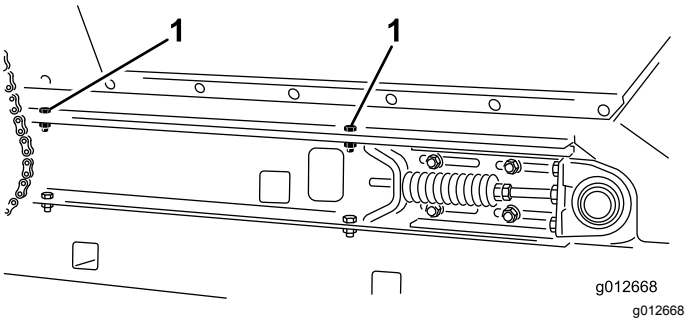

Figure 31

Right side shown

1. Capscrews (hopper mounting)

3. Pivot hopper rearward and lean it against wall, post, ladder, etc. (Figure 32).

   Important: **Do not allow hopper to rest against the rear of machine to avoid damaging the brush or the hydraulic couplers.**

   Make sure that the hopper is pivoted beyond center and/or secured to wall or post to prevent it from accidentally falling on work area (Figure 32).

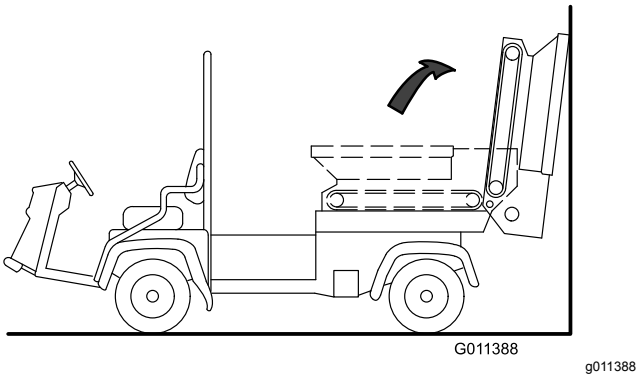

Figure 32

4. At the right side of machine, loosen 2 capscrews that secure slider-frame rail to the right fender (Figure 33). Ensure that the capscrews are loose enough to allow slider bed tip.

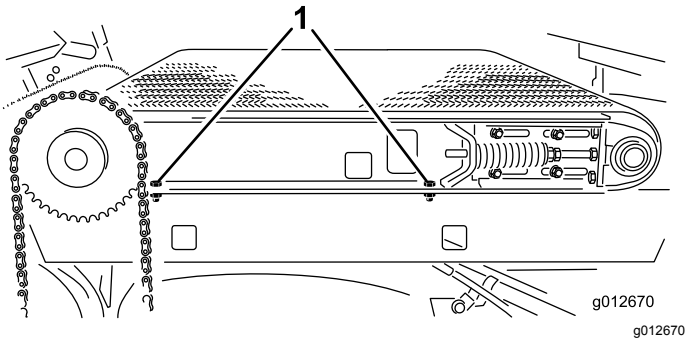

Figure 33

1. Capscrews (slider-frame rail)

5. At the left side of machine, remove 2 capscrews and 2 washers that secure slider-frame rail to the left fender (Figure 34).

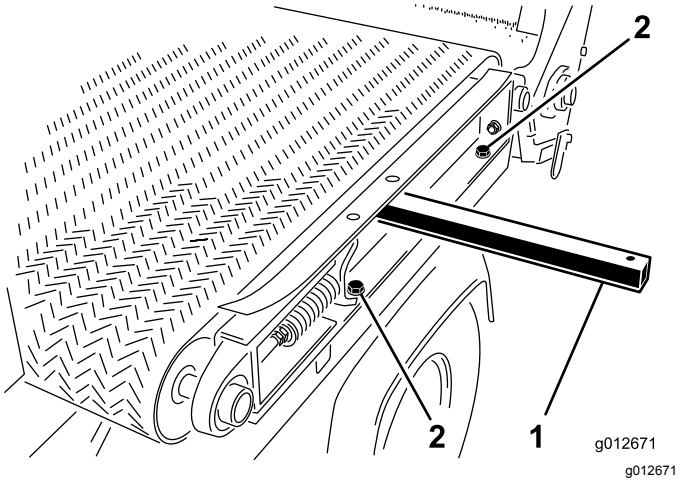

Figure 34

1. Lifting rod
2. Capscrews (slider-frame rail)

Removing the Belt

Cut belt and remove it from rollers.

Installing the Belt

1. Insert a lift bar though the hole at the left slider-frame rail, and raise the lift bar to tip frame rail slightly; refer to Figure 34 in Disassembling the Slider Bed (page 23).
2. Assemble the belt over the lift bar and rollers as far as possible.
3. Insert a plastic belt tool between each roller and the belt.

   Rotate rollers until each tool is positioned to the outside of each roller. Insert the tool past rib in the center of belt.
4. Slide belt and belt tools further onto rollers until belt is centered on rollers.
5. Remove belt tools.
6. Align belt so that the belt rib fits into alignment grooves in each roller.

Assembling the Slider Bed

1. At the left side of machine, assemble the slider-frame rail to the left fender (Figure 35) with the 2 capscrews and 2 washers that you removed in Disassembling the Slider Bed (page 23), and tighten the capscrews.

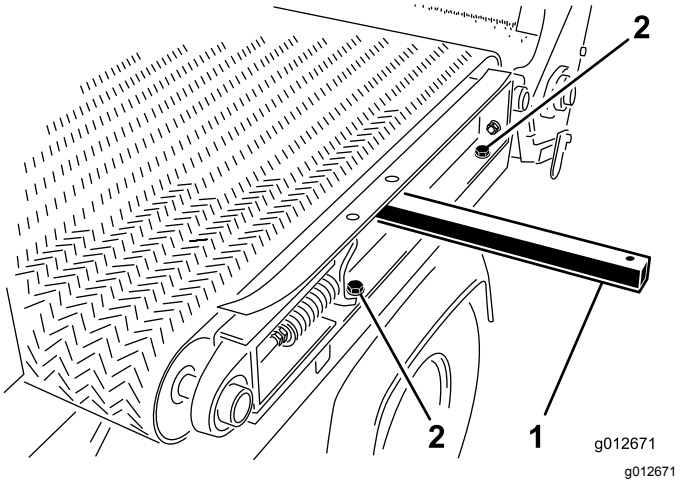

Figure 35

1. Lifting rod
2. Capscrews (slider-frame rail)

2. At the right side of machine, tighten 2 capscrews that secure slider-frame rail to the right fender (Figure 36).

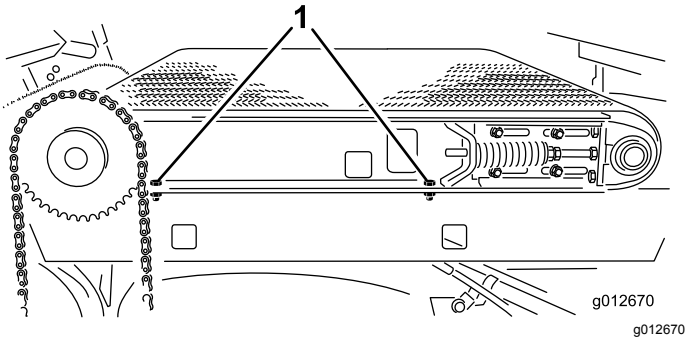

Figure 36

1. Capscrews (slider-frame rail)

3. Carefully rotate the hopper down onto the slider-frame rails; refer to Figure 32 of Disassembling the Slider Bed (page 23).
4. At each side of machine, secure the hopper to slider-frame rails (Figure 37) with the 2 capscrews, 2 washers, and 2 locknuts that you removed in Disassembling the Slider Bed (page 23).

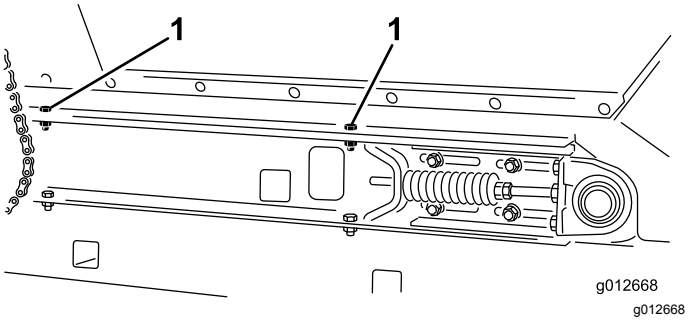

Figure 37

Right side shown

1. Capscrews (hopper mounting)

5. Tension the conveyer belt; refer to Tensioning the Conveyor Belt (page 22).

Installing the Conveyer Chain

1. Assemble the chain onto the small sprocket and secure the chain with the master link (Figure 38).

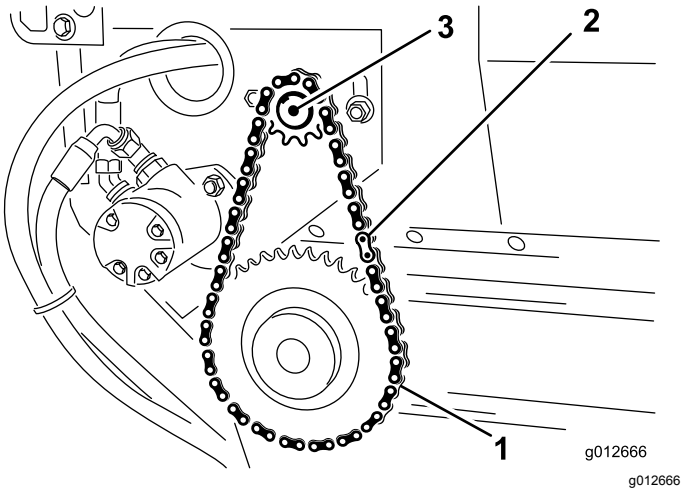

Figure 38

1. Drive chain
2. Master link
3. Motor

2. If you loosen the motor-mount bolts, tension the conveyer-belt chain, refer to Tensioning the Conveyor-Belt Chain (page 21).
3. Install the chain cover (Figure 39).

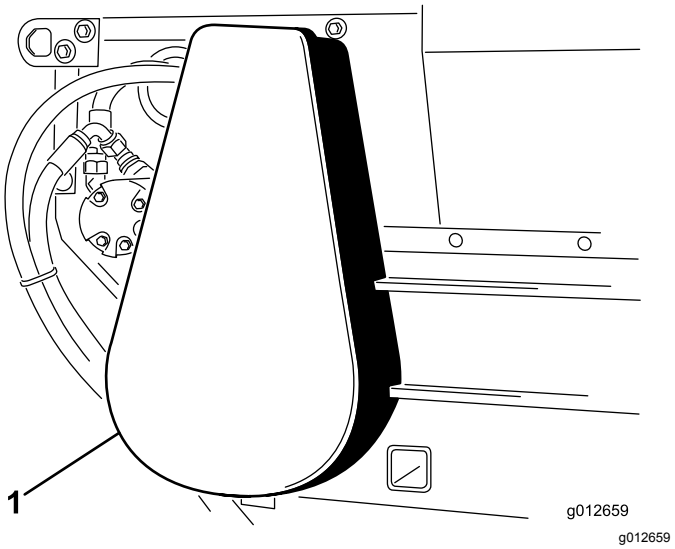

Figure 39

1. Chain cover

Hydraulic System Maintenance

Hydraulic System Safety

- Seek immediate medical attention if fluid is injected into skin. Injected fluid must be surgically removed within a few hours by a doctor.
- Ensure that all hydraulic-fluid hoses and lines are in good condition and all hydraulic connections and fittings are tight before applying pressure to the hydraulic system.
- Keep your body and hands away from pinhole leaks or nozzles that eject high-pressure hydraulic fluid.
- Use cardboard or paper to find hydraulic leaks.
- Safely relieve all pressure in the hydraulic system before performing any work on the hydraulic system.

Checking the Hydraulic Lines and Hoses

Service Interval: Before each use or daily

Check the hydraulic lines and hoses for leaks, kinked lines, loose mounting supports, wear, loose fittings, weather deterioration, and chemical deterioration. Make all necessary repairs before operating.

Brush Maintenance

Checking the Brush for Position and Wear

Service Interval: Every 40 hours

Brush must make enough contact with conveyor belt to disperse top-dressing material but not restrict the rotation of the brush. A piece of stiff paper can be inserted between the conveyor belt and the brush to check the adjustment.

1. Insert a piece of stiff between the conveyor belt and the brush to check the adjustment.
2. Check that the brush is same height from side to side.
3. Check the condition of the brush bristles.

   If the bristles are excessively worn replace the brush. If the bristles are worn uneven either replace the brush or adjust the brush position; refer to Adjusting the Brush Position (page 26).

Adjusting the Brush Position

Note: If you are using moist top-dressing material, you may need to adjust the brush position so that the bristles will whisk material from between conveyor belt lugs without excessively contacting smooth portion of belt.

1. Loosen nuts that secure the bearing housing (Figure 40) to right side of machine.

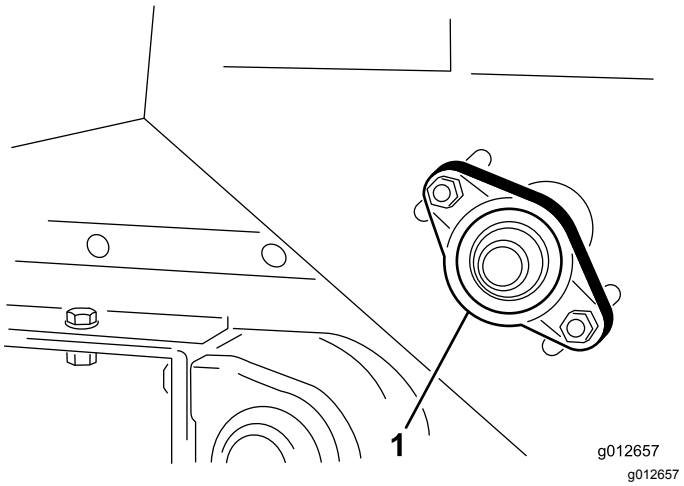

Figure 40

1. Bearing housing

2. Loosen nuts that secure the brush motor (Figure 41) to left side of machine.

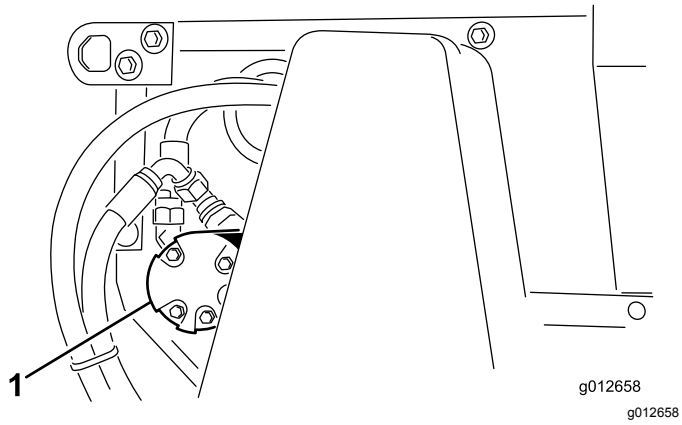

Figure 41

1. Brush motor

3. Slide brush into position at right side, and snug the nuts.
4. Slide brush into position at left side, and snug the nuts.
5. Insert a piece of stiff paper between the brush and the conveyor belt.

   The brush must be the same height from side to side.
6. If the brush position is correct, tighten nuts.

   If the brush position is not correct, repeat steps 1 through 6.

Cleaning

Washing the Machine

Wash the machine as needed using water alone or with a mild detergent. You may use a rag when washing the machine.

Important: **Do not use brackish or reclaimed water to clean the machine.**

Important: **Do not use power-washing equipment to wash the machine. Power-washing equipment may damage the electrical system, loosen important decals, or wash away necessary grease at friction points. Avoid excessive use of water near the control panel.**

Storage

Storage Safety

- Shut off the machine, remove the key (if equipped), and wait for all movement to stop before you leave the operator's position. Allow the machine to cool before adjusting, servicing, cleaning, or storing it.
- Do not store the machine or fuel container where there is an open flame, spark, or pilot light, such as on a water heater or other appliance.

Preparing the Machine for Storage

1. Thoroughly clean the machine, especially inside the hopper. The hopper and conveyor belt area should be free of sand particles.
2. Tighten all fasteners.
3. Lubricate all grease fittings and bearings. Wipe off any excess lubricant.
4. Store the machine out of the sun to prolong the life of the conveyor belt. When you store the machine outside, cover the hopper with a tarp.
5. Check the tension of the drive chain. Adjust the tension, if necessary.
6. Check the tension of the conveyor belt. Adjust the tension, if necessary.
7. When bringing the machine out of storage, check for smooth operation of belt before adding material into the hopper.

Troubleshooting

Problem	Possible Cause	Corrective Action
Connecting and/or disconnecting the quick couplers is difficult.	1. The hydraulic system is pressurized. 2. The engine is running. 3. The remote hydraulic valve is not placed in the float (only on vehicles with serial numbers prior to 239999999).	1. Depressurize the hydraulic system. 2. Shut off the engine. 3. Place the remote hydraulic valve in the float.
It is hard to steer the vehicle.	1. The remote hydraulic valve linkage is out of adjustment (only on vehicles with serial numbers prior to 239999999). 2. The level of the hydraulic fluid is too low. 3. The hydraulic fluid is hot.	1. Adjust the valve linkage. 2. Fill the hydraulic fluid to the proper level. 3. Allow the hydraulic system to cool.
The hydraulic system is leaking.	1. A fitting is loose. 2. A fitting is missing an O-ring.	1. Tighten the fitting. 2. Install the proper O-ring.
The attachment does not function.	1. The quick couplers are not fully engaged. 2. The quick couplers are interchanged. 3. A belt is slipping.	1. Check and correct the quick couplers. 2. Check and correct the quick couplers. 3. Check and adjust the belt tension.

EEA/UK Privacy Notice

Toro's Use of Your Personal Information

The Toro Company ("Toro") respects your privacy. When you purchase our products, we may collect certain personal information about you, either directly from you or through your local Toro company or dealer. Toro uses this information to fulfil contractual obligations - such as to register your warranty, process your warranty claim or to contact you in the event of a product recall - and for legitimate business purposes - such as to gauge customer satisfaction, improve our products or provide you with product information which may be of interest. Toro may share your information with our subsidiaries, affiliates, dealers or other business partners in connection these activities. We may also disclose personal information when required by law or in connection with the sale, purchase or merger of a business. We will never sell your personal information to any other company for marketing purposes.

Retention of your Personal Information

Toro will keep your personal information as long as it is relevant for the above purposes and in accordance with legal requirements. For more information about applicable retention periods please contact legal@toro.com.

Toro's Commitment to Security

Your personal information may be processed in the US or another country which may have less strict data protection laws than your country of residence. Whenever we transfer your information outside of your country of residence, we will take legally required steps to ensure that appropriate safeguards are in place to protect your information and to make sure it is treated securely.

Access and Correction

You may have the right to correct or review your personal data, or object to or restrict the processing of your data. To do so, please contact us by email at legal@toro.com. If you have concerns about the way in which Toro has handled your information, we encourage you to raise this directly with us. Please note that European residents have the right to complain to your Data Protection Authority.

California Proposition 65 Warning Information

What is this warning?

You may see a product for sale that has a warning label like the following:

WARNING: Cancer and Reproductive Harm—www.p65Warnings.ca.gov.

What is Prop 65?

Prop 65 applies to any company operating in California, selling products in California, or manufacturing products that may be sold in or brought into California. It mandates that the Governor of California maintain and publish a list of chemicals known to cause cancer, birth defects, and/or other reproductive harm. The list, which is updated annually, includes hundreds of chemicals found in many everyday items. The purpose of Prop 65 is to inform the public about exposure to these chemicals.

Prop 65 does not ban the sale of products containing these chemicals but instead requires warnings on any product, product packaging, or literature with the product. Moreover, a Prop 65 warning does not mean that a product is in violation of any product safety standards or requirements. In fact, the California government has clarified that a Prop 65 warning "is not the same as a regulatory decision that a product is 'safe' or 'unsafe.'" Many of these chemicals have been used in everyday products for years without documented harm. For more information, go to https://oag.ca.gov/prop65/faqs-view-all.

A Prop 65 warning means that a company has either (1) evaluated the exposure and has concluded that it exceeds the "no significant risk level"; or (2) has chosen to provide a warning based on its understanding about the presence of a listed chemical without attempting to evaluate the exposure.

Does this law apply everywhere?

Prop 65 warnings are required under California law only. These warnings are seen throughout California in a wide range of settings, including but not limited to restaurants, grocery stores, hotels, schools, and hospitals, and on a wide variety of products. Additionally, some online and mail order retailers provide Prop 65 warnings on their websites or in catalogs.

How do the California warnings compare to federal limits?

Prop 65 standards are often more stringent than federal and international standards. There are various substances that require a Prop 65 warning at levels that are far lower than federal action limits. For example, the Prop 65 standard for warnings for lead is 0.5 µg/day, which is well below the federal and international standards.

Why don't all similar products carry the warning?

- Products sold in California require Prop 65 labelling while similar products sold elsewhere do not.
- A company involved in a Prop 65 lawsuit reaching a settlement may be required to use Prop 65 warnings for its products, but other companies making similar products may have no such requirement.
- The enforcement of Prop 65 is inconsistent.
- Companies may elect not to provide warnings because they conclude that they are not required to do so under Prop 65; a lack of warnings for a product does not mean that the product is free of listed chemicals at similar levels.

Why does Toro include this warning?

Toro has chosen to provide consumers with as much information as possible so that they can make informed decisions about the products they buy and use. Toro provides warnings in certain cases based on its knowledge of the presence of one or more listed chemicals without evaluating the level of exposure, as not all the listed chemicals provide exposure limit requirements. While the exposure from Toro products may be negligible or well within the "no significant risk" range, out of an abundance of caution, Toro has elected to provide the Prop 65 warnings. Moreover, if Toro does not provide these warnings, it could be sued by the State of California or by private parties seeking to enforce Prop 65 and subject to substantial penalties.

The Toro Warranty

Two-Year or 1,500 Hours Limited Warranty

Conditions and Products Covered

The Toro Company and its affiliate, Toro Warranty Company, pursuant to an agreement between them, jointly warrant your Toro Commercial product ("Product") to be free from defects in materials or workmanship for 2 years or 1,500 operational hours*, whichever occurs first. This warranty is applicable to all products with the exception of Aerators (refer to separate warranty statements for these products). Where a warrantable condition exists, we will repair the Product at no cost to you including diagnostics, labor, parts, and transportation. This warranty begins on the date the Product is delivered to the original retail purchaser.
* Product equipped with an hour meter.

Instructions for Obtaining Warranty Service

You are responsible for notifying the Commercial Products Distributor or Authorized Commercial Products Dealer from whom you purchased the Product as soon as you believe a warrantable condition exists. If you need help locating a Commercial Products Distributor or Authorized Dealer, or if you have questions regarding your warranty rights or responsibilities, you may contact us at:

Toro Commercial Products Service Department
Toro Warranty Company
8111 Lyndale Avenue South
Bloomington, MN 55420-1196

952–888–8801 or 800–952–2740
E-mail: commercial.warranty@toro.com

Owner Responsibilities

As the product owner, you are responsible for required maintenance and adjustments stated in your *Operator's Manual*. Repairs for product issues caused by failure to perform required maintenance and adjustments are not covered under this warranty.

Items and Conditions Not Covered

Not all product failures or malfunctions that occur during the warranty period are defects in materials or workmanship. This warranty does not cover the following:

- Product failures which result from the use of non-Toro replacement parts, or from installation and use of add-on, or modified non-Toro branded accessories and products.
- Product failures which result from failure to perform recommended maintenance and/or adjustments.
- Product failures which result from operating the Product in an abusive, negligent, or reckless manner.
- Parts consumed through use that are not defective. Examples of parts which are consumed, or used up, during normal Product operation include, but are not limited to, brake pads and linings, clutch linings, blades, reels, rollers and bearings (sealed or greasable), bed knives, spark plugs, castor wheels and bearings, tires, filters, belts, and certain sprayer components such as diaphragms, nozzles, and check valves.
- Failures caused by outside influence, including, but not limited to, weather, storage practices, contamination, use of unapproved fuels, coolants, lubricants, additives, fertilizers, water, or chemicals.
- Failure or performance issues due to the use of fuels (e.g. gasoline, diesel, or biodiesel) that do not conform to their respective industry standards.
- Normal noise, vibration, wear and tear, and deterioration. Normal "wear and tear" includes, but is not limited to, damage to seats due to wear or abrasion, worn painted surfaces, scratched decals or windows.

Parts

Parts scheduled for replacement as required maintenance are warranted for the period of time up to the scheduled replacement time for that part. Parts replaced under this warranty are covered for the duration of the original product warranty and become the property of Toro. Toro will make the final decision whether to repair any existing part or assembly or replace it. Toro may use remanufactured parts for warranty repairs.

Deep Cycle and Lithium-Ion Battery Warranty

Deep cycle and Lithium-Ion batteries have a specified total number of kilowatt-hours they can deliver during their lifetime. Operating, recharging, and maintenance techniques can extend or reduce total battery life. As the batteries in this product are consumed, the amount of useful work between charging intervals will slowly decrease until the battery is completely worn out. Replacement of worn out batteries, due to normal consumption, is the responsibility of the product owner. Note: (Lithium-Ion battery only): Pro-rated after 2 years. Refer to the battery warranty for additional information.

Lifetime Crankshaft Warranty (ProStripe 02657 Model Only)

The Prostripe which is fitted with a genuine Toro Friction Disc and Crank-Safe Blade Brake Clutch (integrated Blade Brake Clutch (BBC) + Friction Disc assembly) as original equipment and used by the original purchaser in accordance with recommended operating and maintenance procedures, are covered by a Lifetime Warranty against engine crankshaft bending. Machines fitted with friction washers, Blade Brake Clutch (BBC) units and other such devices are not covered by the Lifetime Crankshaft Warranty.

Maintenance is at Owner's Expense

Engine tune-up, lubrication, cleaning and polishing, replacement of filters, coolant, and completing recommended maintenance are some of the normal services Toro products require that are at the owner's expense.

General Conditions

Repair by an Authorized Toro Distributor or Dealer is your sole remedy under this warranty.

Neither The Toro Company nor Toro Warranty Company is liable for indirect, incidental or consequential damages in connection with the use of the Toro Products covered by this warranty, including any cost or expense of providing substitute equipment or service during reasonable periods of malfunction or non-use pending completion of repairs under this warranty. Except for the Emissions warranty referenced below, if applicable, there is no other express warranty. All implied warranties of merchantability and fitness for use are limited to the duration of this express warranty.

Some states do not allow exclusions of incidental or consequential damages, or limitations on how long an implied warranty lasts, so the above exclusions and limitations may not apply to you. This warranty gives you specific legal rights, and you may also have other rights which vary from state to state.

Note Regarding Emissions Warranty

The Emissions Control System on your Product may be covered by a separate warranty meeting requirements established by the U.S. Environmental Protection Agency (EPA) and/or the California Air Resources Board (CARB). The hour limitations set forth above do not apply to the Emissions Control System Warranty. Refer to the Engine Emission Control Warranty Statement supplied with your product or contained in the engine manufacturer's documentation.

Countries Other than the United States or Canada

Customers who have purchased Toro products exported from the United States or Canada should contact their Toro Distributor (Dealer) to obtain guarantee policies for your country, province, or state. If for any reason you are dissatisfied with your Distributor's service or have difficulty obtaining guarantee information, contact your Authorized Toro Service Center.