Form No. 3430-637 Rev A

TORO®

Count on it.

Parts Catalog

X25 GeoLink® Precision Spray System Finishing Kit

Serial Number 315000001 and After Multi Pro® 1750 Turf Sprayer

Model No. 41631—Serial No. 403400001 and Up

Register at www.Toro.com.
Original Instructions (EN)

CE

3430-637 A

Ordering Replacement Parts

To order replacement parts, please supply the part number, the quantity, and the description of each part desired.

Understanding Reference Numbers

Each identified part in an illustration has a reference number. The reference number for a part also appears in the parts list, along with other information about the part.

This catalog uses two special reference number formats, one to indicate parts in a service assembly and another to indicate the quantity of a given part in an illustration.

Service Assembly Reference Numbers

Parts in service assemblies have reference numbers in the form a:b. The a represents the reference number of the entire service assembly and the b represents a sequential number unique to each part within the service assembly.

For example, a wheel assembly might be identified by reference number 6, the tire by 6:1, the valve by 6:2, and the wheel by 6:3. When you order the assembly identified by reference number 6, you receive all parts identified by reference numbers 6:1,6:2, and 6:3. However, you may also order any part individually. Reference numbers of this type appear in illustration and in parts lists.

Reference Numbers Indicating Quantity

In an illustration, if a reference number indicates more than one part, the reference number has the form nX y. The n represents the quantity of the part, the X is the multiplication symbol, and the y represents the reference number.

For example, in an illustration, the reference number 2X 37 means that two of the parts identified by reference number 37 are indicated.

Contents

Monitor Mount Assembly 4
Receiver Mount Assembly 5
Hose Assembly 6
Shutoff Bypass Valve Assembly No. 131-5838 7
On/Off 2-Way Valve Kit No. 131-0249 8
GPS Valve Mount and Hose Assembly 9
GPS Valve Mount Assembly 10
Section Valve Manifold Assembly 11
On/Off Manifold Valve Kit No. 127-9803 12
On/Off Actuator Kit No. 131-3723 13
Bypass Valve Assembly No. 127-9805 14
Center Boom Assembly 15
Double Turret Body Assembly No. 108-3727 16
Electrical Assembly 17

© 2019—The Toro® Company
8111 Lyndale Avenue South
Bloomington, MN 55420

Contact us at www.Toro.com.
Printed in the USA.
All Rights Reserved

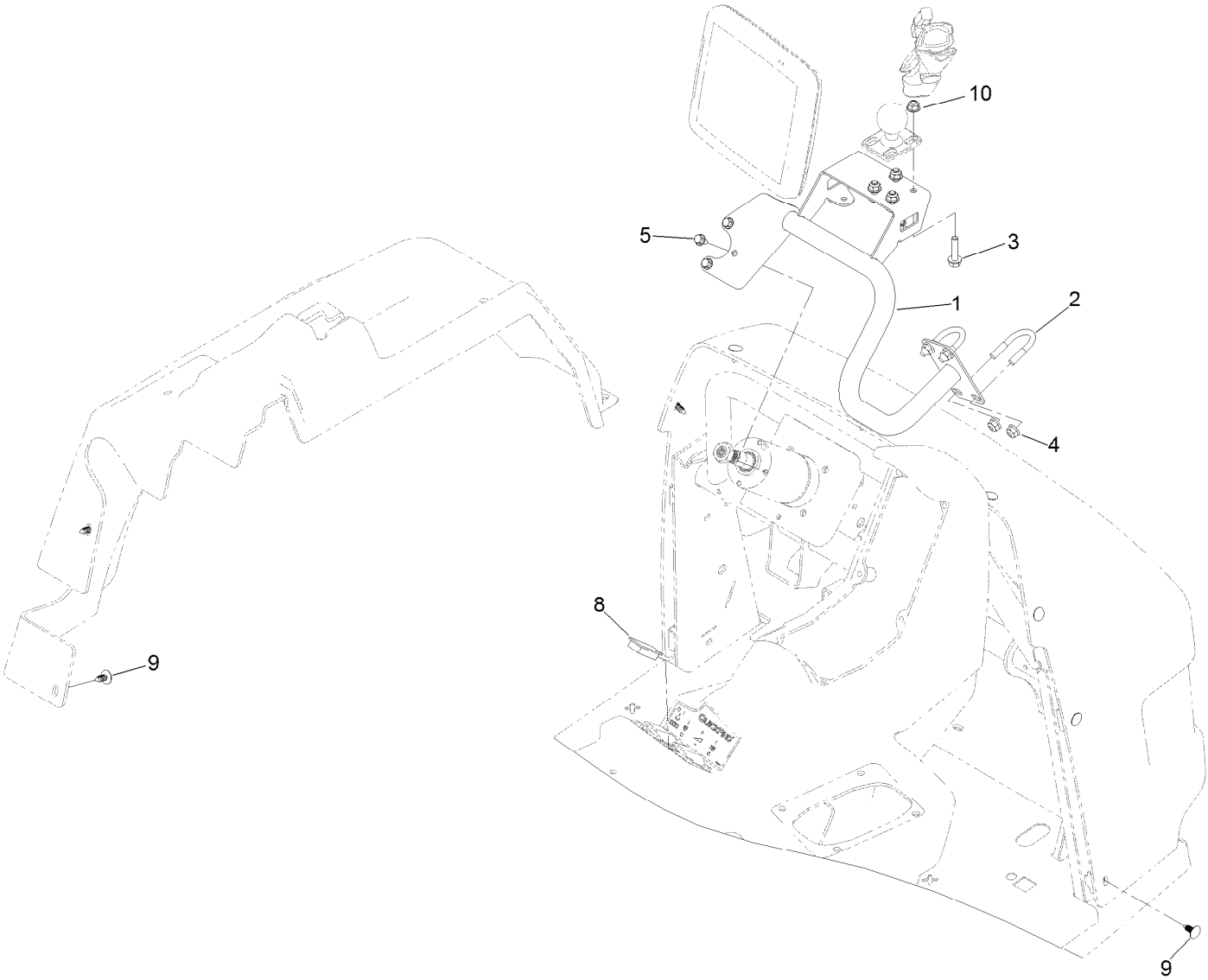

Monitor Mount Assembly

Ref.	*Part Number*	*Qty.*	*Description*
1	133-2844-03	1	Mount-Monitor
2	60-9350	2	U-Bolt
3	3234-21	4	Screw-HHF
4	104-8300	4	Nut-HF, NI
5	33103-012	3	Screw-HHF
8	99-7420	1	Plug-Hole
9	117-2382	14	Plug-Plastic
10	104-7201	4	Nut-HF

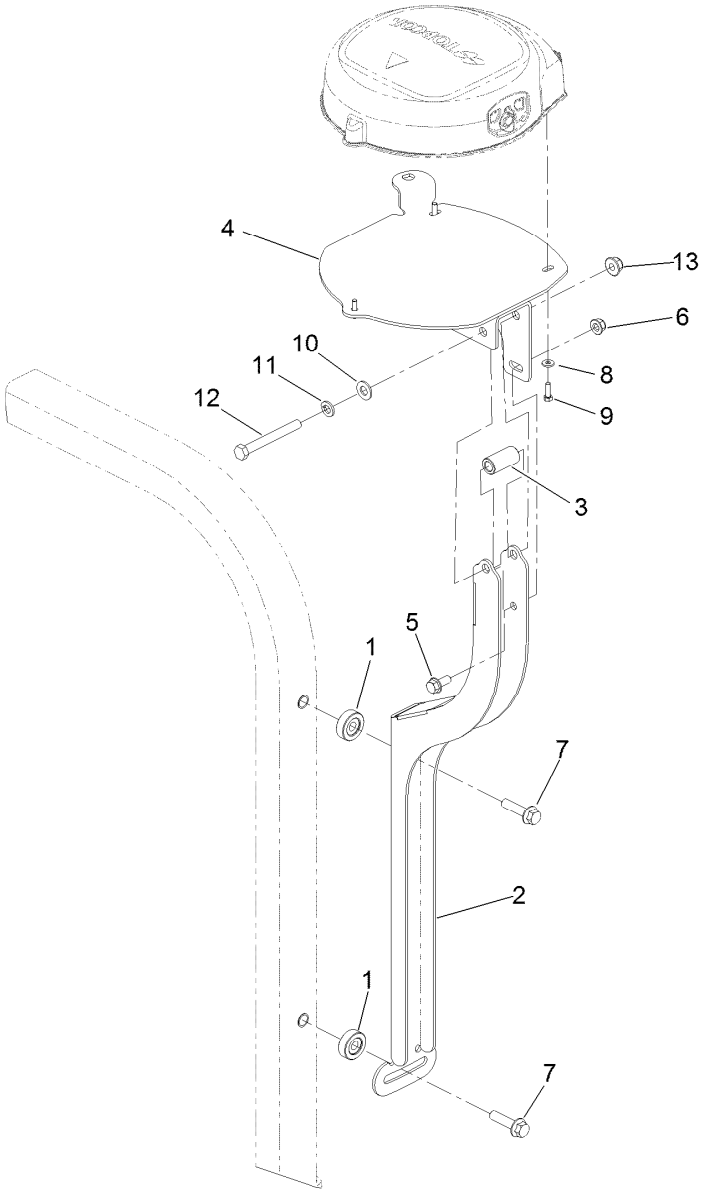

Receiver Mount Assembly

Ref.	*Part Number*	*Qty.*	*Description*
1	133-2896	2	Spacer-Standoff
2	133-2891-03	1	Mount-Receiver
3	110-3726	1	Spacer
4	133-2895-03	1	Plate-Receiver
5	3234-47	1	Screw-HHF
6	104-8300	1	Nut-HF, NI
7	114-4681	2	Screw-HHF
8	3256-14	3	Washer-Flat
9	60-6910	3	Screw-HH
10	3256-24	1	Washer-Flat
11	3253-21	1	Washer-Lock
12	323-20	1	Screw-HH
13	104-8301	1	Nut-HF, NI

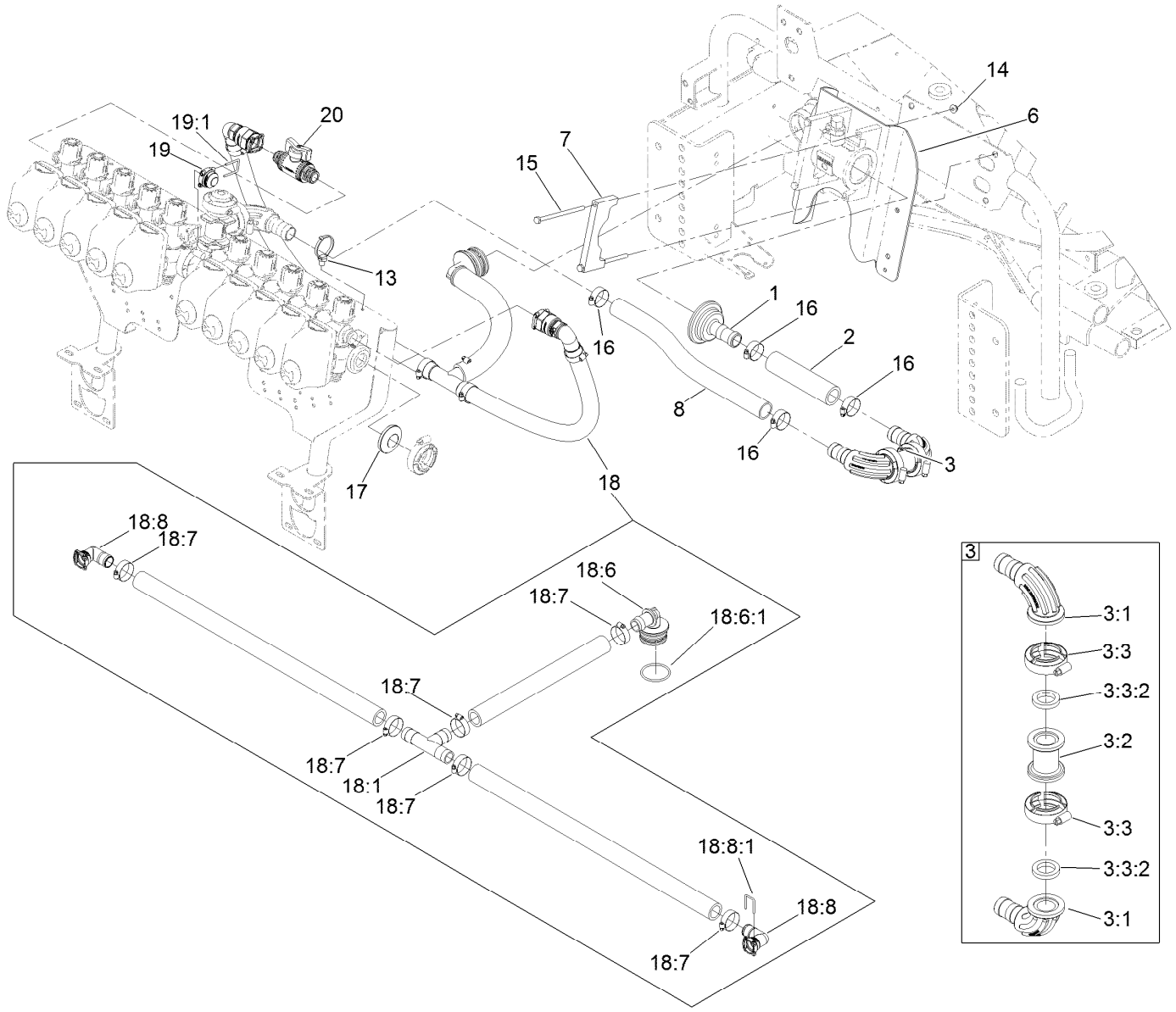

Hose Assembly

Ref.	Part Number	Qty.	Description
1	107-8704	1	Hosebarb
2	133-2774	1	Hose-Supply
3	138-0646	1	Manifold-Connection
3:1	131-0241	2	Fitting-Elbow, Sweep
3:2	127-9814	1	Fitting-Adapter
3:3	127-9829	2	Clamp/Gasket Kit
3:3:2	127-1145	1	Gasket-Flange
6	133-2818-03	1	Mount-Flowmeter
7	132-7605	4	Clamp-Flowmeter
8	132-4311	1	Hose-Agitation
13	32180-030	1	Clip-Tie
14	104-7201	4	Nut-HF
15	321-38	4	Screw-HH

Ref.	Part Number	Qty.	Description
16	2412-34	4	Clamp-Hose
17	127-9815	1	Fitting-Cap
18	136-0467	1	Hose Assembly
18:1	117-7866	1	Tee-Hosebarb
18:6	106-4933	1	Hosebarb ASM
18:6:1	100-8637	1	O-Ring
18:7	2412-34	6	Clamp-Hose
18:8	131-0213	2	90 DEG Barb Fitting Kit
18:8:1	133-0398	1	Pin-Fork
19	127-9811	1	Fitting-Cap, Female
19:1	133-0398	1	Pin-Fork
20	131-5838	1	Shutoff Bypass Valve ASM

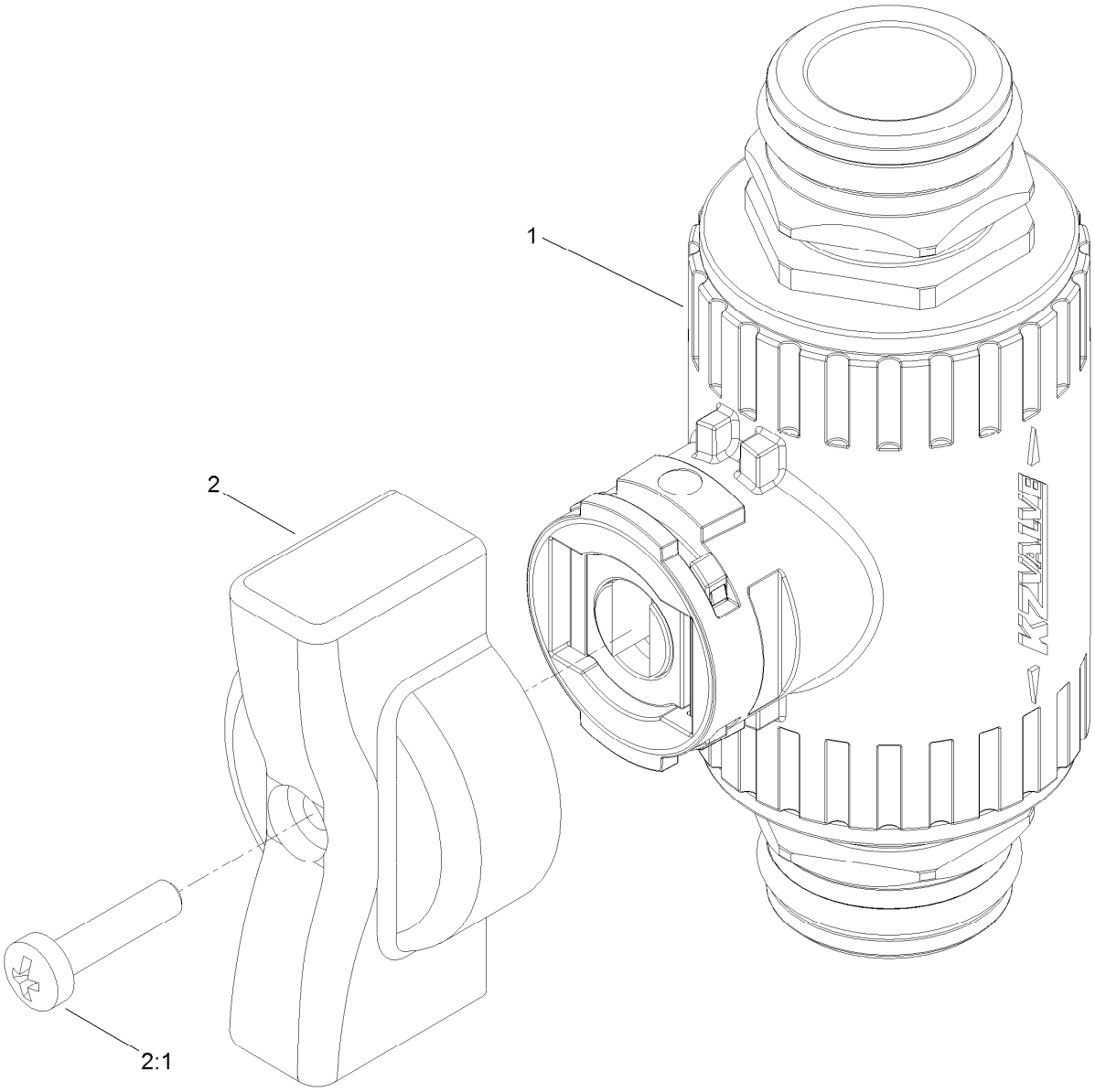

Shutoff Bypass Valve Assembly No. 131-5838

Ref.	*Part Number*	*Qty.*	*Description*
1	131-0249	1	On/Off 2-Way Valve Kit
2	131-0267	1	Bypass Handle Kit
2:1	131-0263	1	Screw-Handle

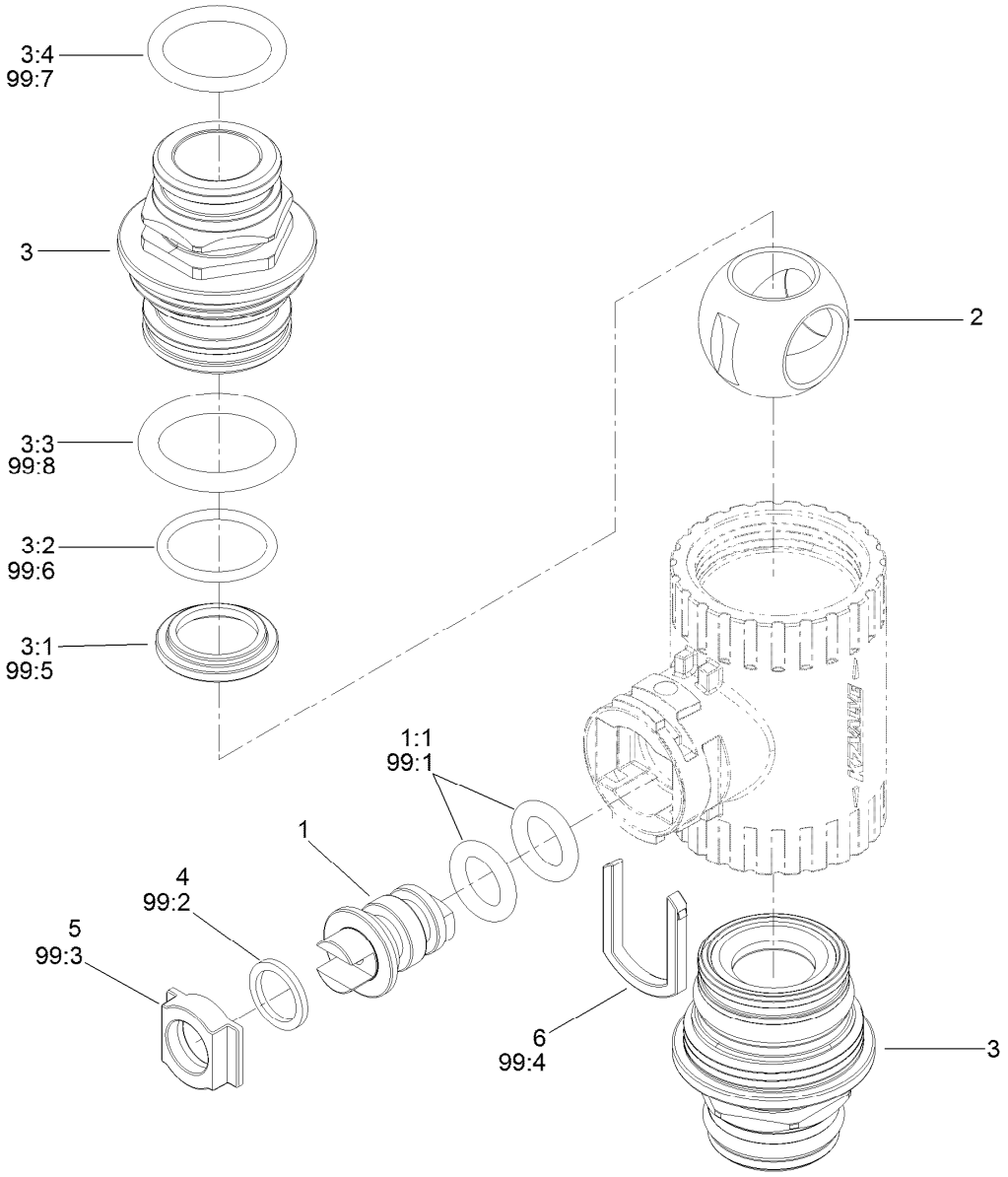

On/Off 2-Way Valve Kit No. 131-0249

Ref.	*Part Number*	*Qty.*	*Description*
1	130-8248	1	Vavle Stem Kit
1:1	127-1197	2	O-Ring-Stem
2	131-0252	1	Ball-2-Way
3	130-7317	2	Endcap Kit
3:1	127-1192	1	Seat-Ball
3:2	127-1188	1	O-Ring, Seat (Ball)
3:3	127-1189	1	O-Ring, Endcap
3:4	127-1187	1	O-Ring, Endcap
4	127-1196	1	Washer-Stem, Valve
5	127-1195	1	Seat-Stem, Valve

Ref.	*Part Number*	*Qty.*	*Description*
6	127-1190	1	Fork-Stem, Valve
99	130-7304	1	Valve Repair Kit ●
99:1	127-1197	2	O-Ring-Stem
99:2	127-1196	2	Washer-Stem, Valve
99:3	127-1195	1	Seat-Stem, Valve
99:4	127-1190	1	Fork-Stem, Valve
99:5	127-1192	2	Seat-Ball
99:6	127-1188	2	O-Ring, Seat (Ball)
99:7	127-1187	2	O-Ring, Endcap
99:8	127-1189	2	O-Ring, Endcap

● Not illustrated

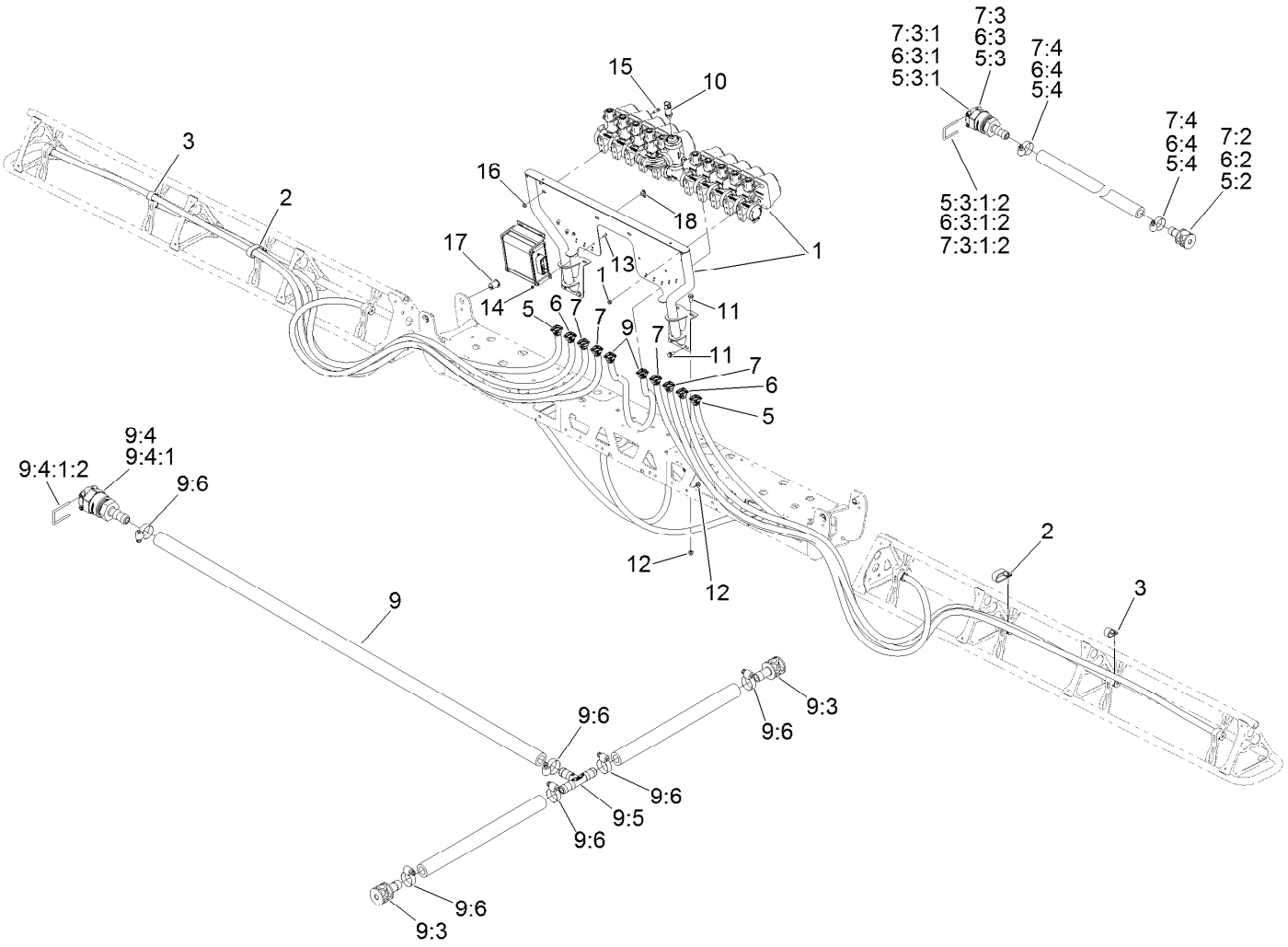

GPS Valve Mount and Hose Assembly

Ref.	Part Number	Qty.	Description
1		1	GPS Valve Mount ASM ●
2	2412-137	2	Clamp-R, Double
3	2412-39	2	Clamp-R
5	131-7288	2	Hose Nozzle ASM
5:2	130-7265	1	Shank-Nozzle, Single
5:3	132-4260	1	Fitting ASM
5:3:1		1	Fitting-Straight ●
5:3:1:2	133-0398	1	Pin-Fork
5:4	2412-36	2	Clamp-Hose
6	131-7289	2	Hose Nozzle ASM
6:2	130-7265	1	Shank-Nozzle, Single
6:3	132-4260	1	Fitting ASM
6:3:1		1	Fitting-Straight ●
6:3:1:2	133-0398	1	Pin-Fork
6:4	2412-36	2	Clamp-Hose
7	131-7290	4	Hose Nozzle ASM
7:2	130-7265	1	Shank-Nozzle, Single
7:3	132-4260	1	Fitting ASM
7:3:1		1	Fitting-Straight ●

Ref.	Part Number	Qty.	Description
7:3:1:2	133-0398	1	Pin-Fork
7:4	2412-36	2	Clamp-Hose
9	131-7292	2	Hose Nozzle ASM
9:3	130-7265	2	Shank-Nozzle, Single
9:4	132-4260	1	Fitting ASM
9:4:1		1	Fitting-Straight ●
9:4:1:2	133-0398	1	Pin-Fork
9:5	131-3736	1	Fitting-Tee, Barb
9:6	2412-36	6	Clamp-Hose
10	130-8202	1	Transducer-Pressure
11	3234-47	8	Screw-HHF
12	104-8300	8	Nut-HF, NI
13	60-6500	3	Screw-HH
14	127-2018	3	Nut-HHF
15	3234-4	2	Screw-HHF
16	104-7201	2	Nut-HF
17	100-8541	4	Bushing-A Arm
18	32180-161	3	Clip-Connector

● Not serviced separately

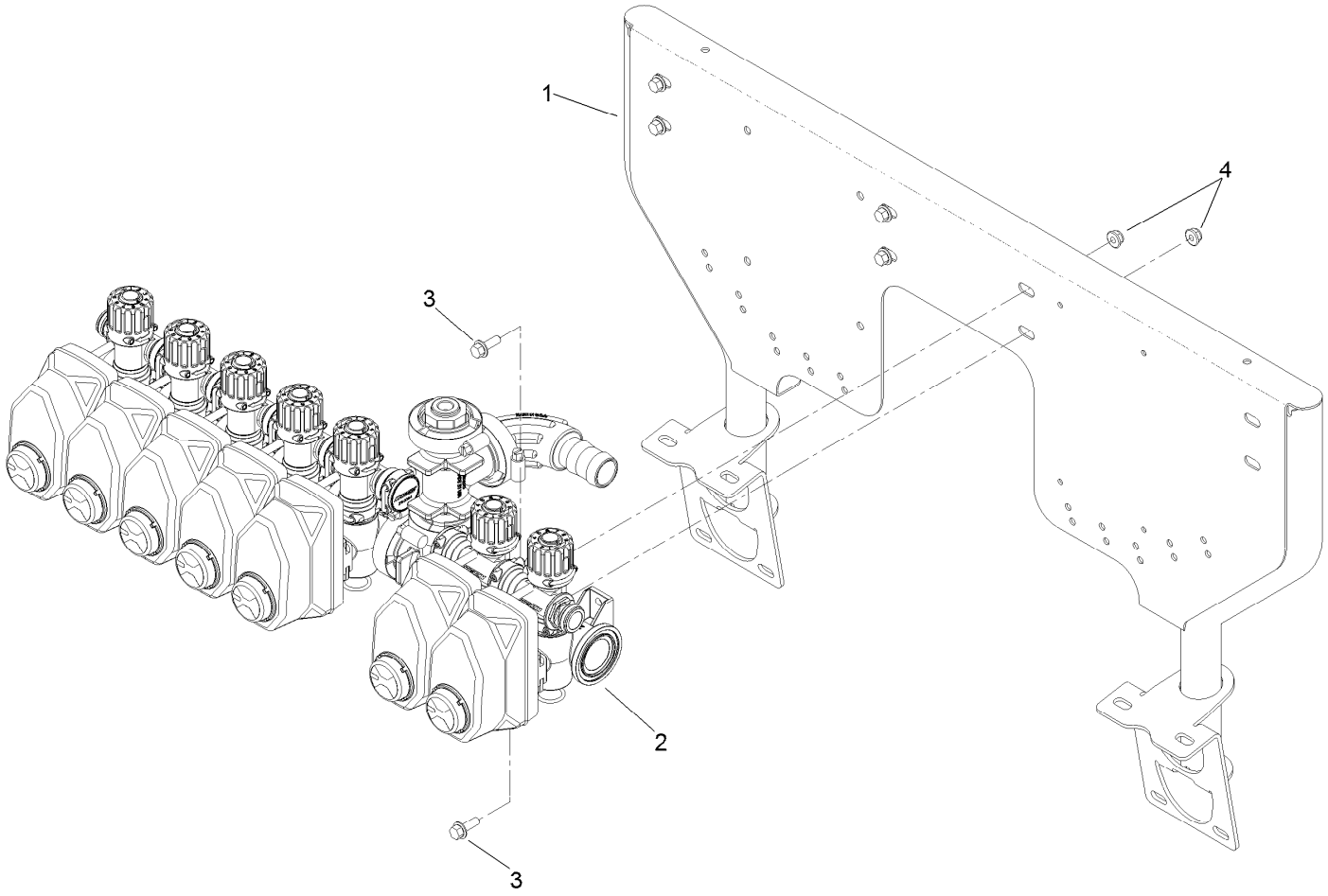

GPS Valve Mount Assembly

Ref.	*Part Number*	*Qty.*	*Description*
1	131-3753-03	1	Mount-Valve, GPS
2		1	Manifold-Valves, Sections ●
3	3234-4	6	Screw-HHF
4	104-7201	6	Nut-HF

● Not serviced separately

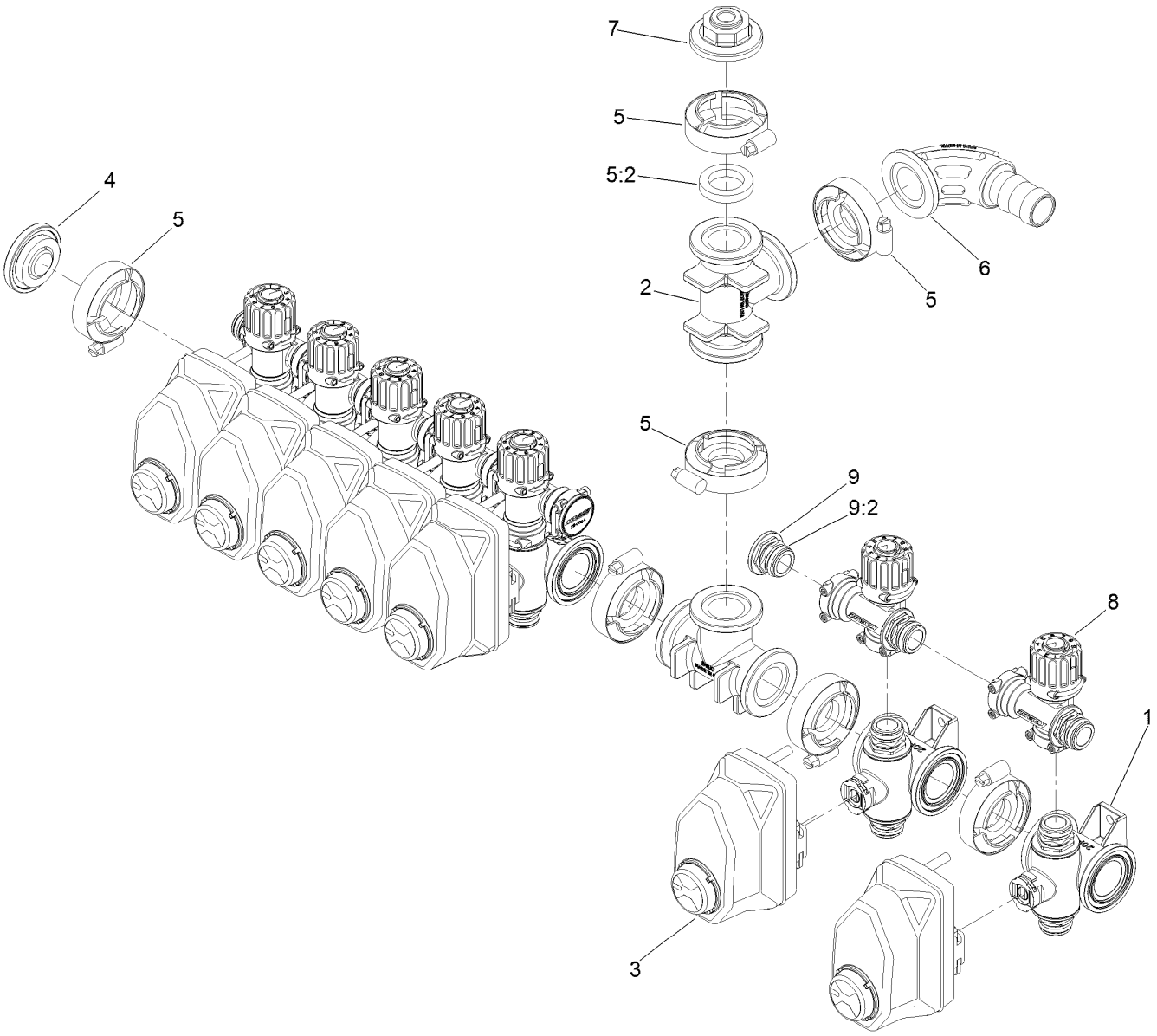

Section Valve Manifold Assembly

Ref.	*Part Number*	*Qty.*	*Description*
1	127-9803	7	On/Off Manifold Valve Kit
2	127-9834	2	Fitting-Tee
3	131-3723	7	Actuator On/Off Kit
4	127-9815	1	Fitting-Cap
5	127-9829	11	Clamp/Gasket Kit
5:2	127-1145	1	Gasket-Flange
6	131-0241	1	Fitting-Elbow, Sweep
7	127-1185	1	Fitting-Cap, Port
8	127-9805	7	Bypass Valve ASM
9	127-9810	2	Male Cap Fitting Kit
9:2	127-1187	1	O-Ring, Endcap

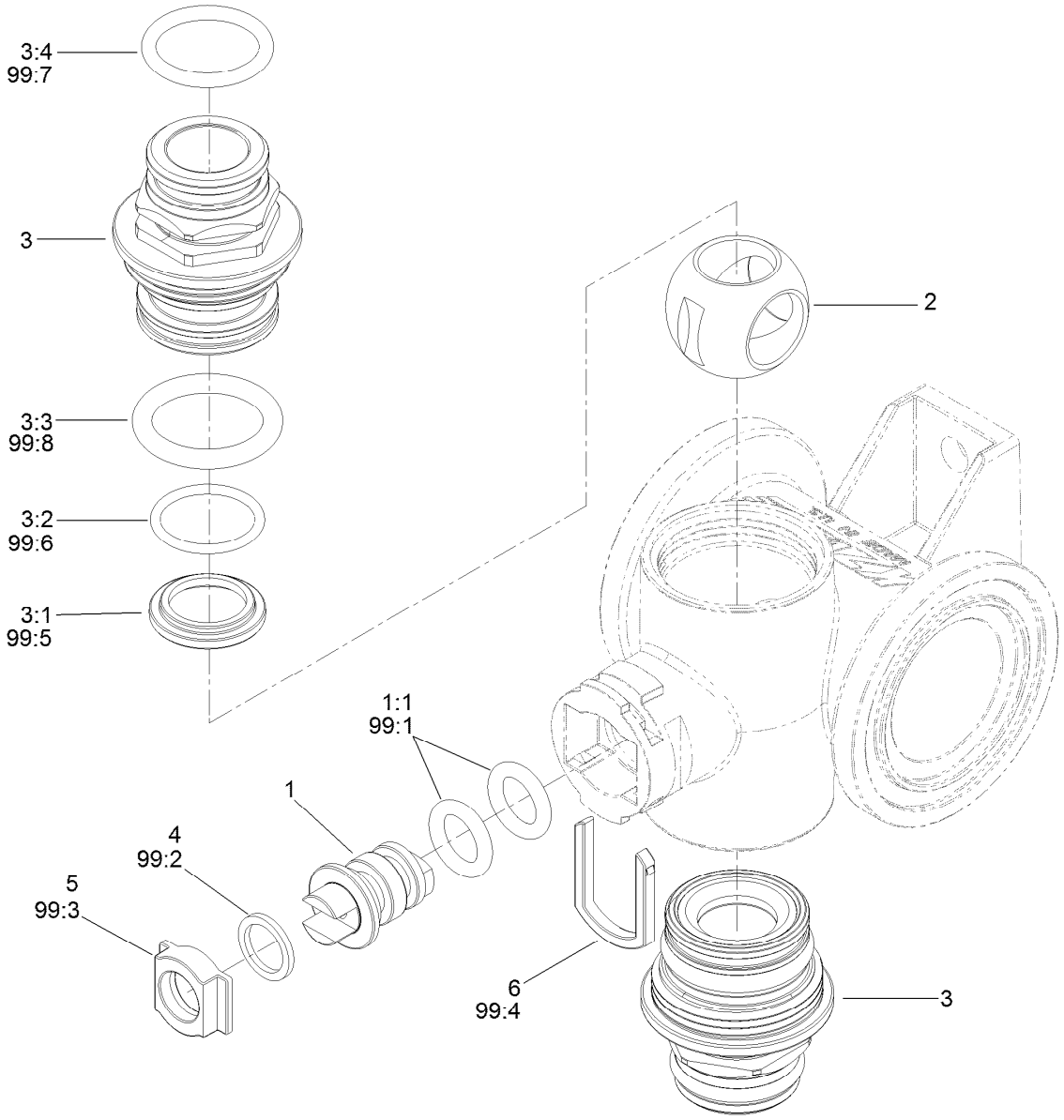

On/Off Manifold Valve Kit No. 127-9803

Ref.	*Part Number*	*Qty.*	*Description*
1	130-8248	1	Vavle Stem Kit
1:1	127-1197	2	O-Ring-Stem
2	127-1194	1	Ball-Valve, 3Way
3	130-7317	2	Endcap Kit
3:1	127-1192	1	Seat-Ball
3:2	127-1188	1	O-Ring, Seat (Ball)
3:3	127-1189	1	O-Ring, Endcap
3:4	127-1187	1	O-Ring, Endcap
4	127-1196	1	Washer-Stem, Valve
5	127-1195	1	Seat-Stem, Valve

Ref.	*Part Number*	*Qty.*	*Description*
6	127-1190	1	Fork-Stem, Valve
99	130-7304	1	Valve Repair Kit ●
99:1	127-1197	2	O-Ring-Stem
99:2	127-1196	2	Washer-Stem, Valve
99:3	127-1195	1	Seat-Stem, Valve
99:4	127-1190	1	Fork-Stem, Valve
99:5	127-1192	2	Seat-Ball
99:6	127-1188	2	O-Ring, Seat (Ball)
99:7	127-1187	2	O-Ring, Endcap
99:8	127-1189	2	O-Ring, Endcap

● Not illustrated

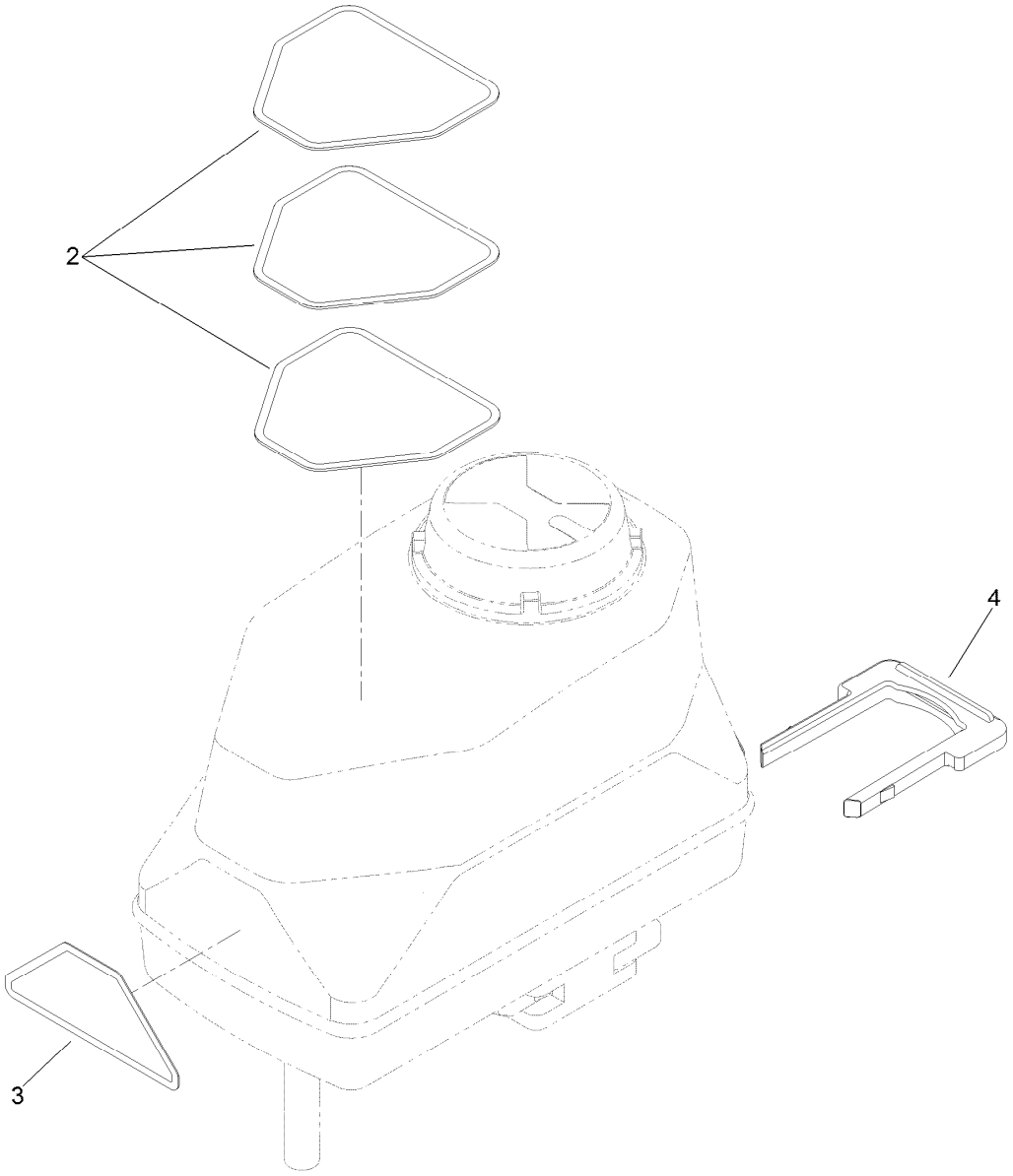

On/Off Actuator Kit No. 131-3723

Ref.	*Part Number*	*Qty.*	*Description*
2	127-6979	1	Decal-Valve, Agitation
2	127-6981	1	Decal-Valve, On/Off
2	127-6982	1	Decal-Valve, Master Boom
3	127-6976	1	Decal-Valve, Bypass Adjust
4	130-7301	1	Hairpin-Actuator

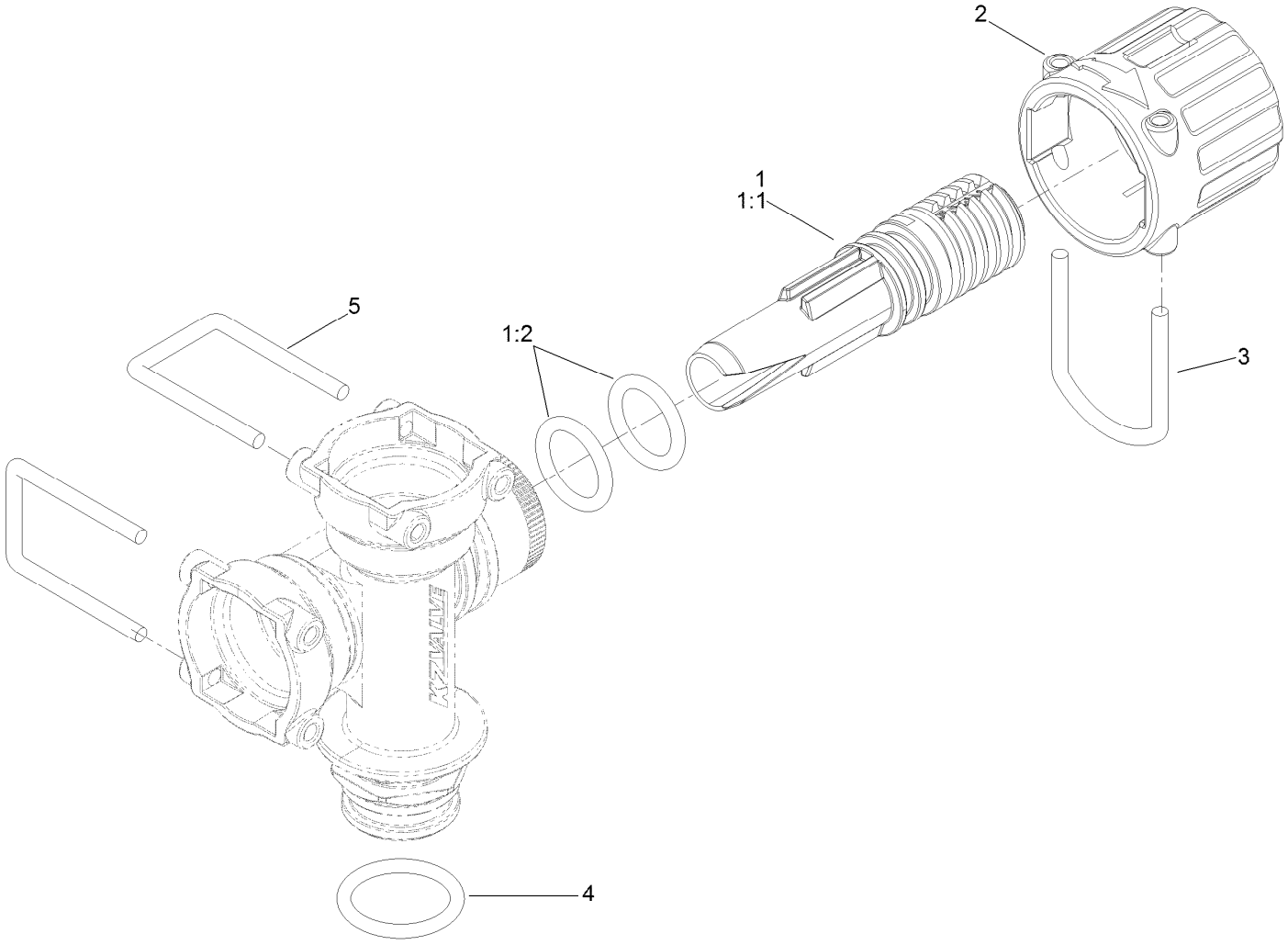

Bypass Valve Assembly No. 127-9805

Ref.	*Part Number*	*Qty.*	*Description*
1	131-0298	1	Bypass Needle Kit
1:1	127-1182	1	Needle-Bypass
1:2	127-1181	2	Oring-Bypass Needle
2	127-1180	1	Knob-Bypass
3	127-1179	1	Fork-Bypass Knob
4	127-1187	1	O-Ring, Endcap
5	133-0398	2	Pin-Fork

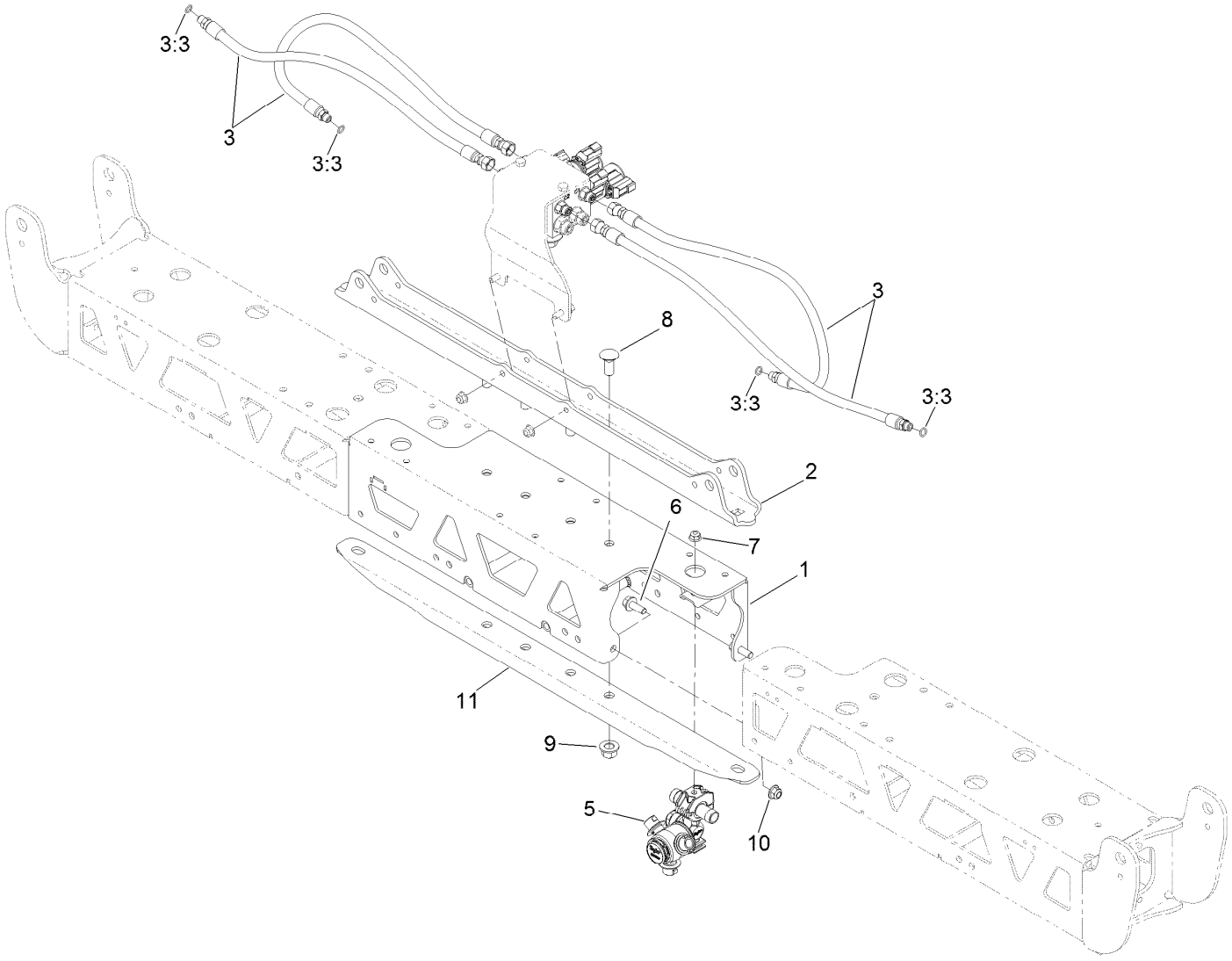

Center Boom Assembly

Ref.	*Part Number*	*Qty.*	*Description*
1	133-0412-03	1	Center-Center, Boom
2	131-0275-03	1	Plate-Mount
3	131-0276	4	Hose ASM
3:3	237-78	1	O-Ring
5	108-3727	1	Double Turret Body ASM
6	3234-42	4	Screw-HHF
7	104-8300	1	Nut-HF, NI
8	110-5067	4	Screw-CARR
9	99-5107	4	Nut-Lock
10	104-8301	4	Nut-HF, NI
11	131-0285-03	1	Stiffener-Channel

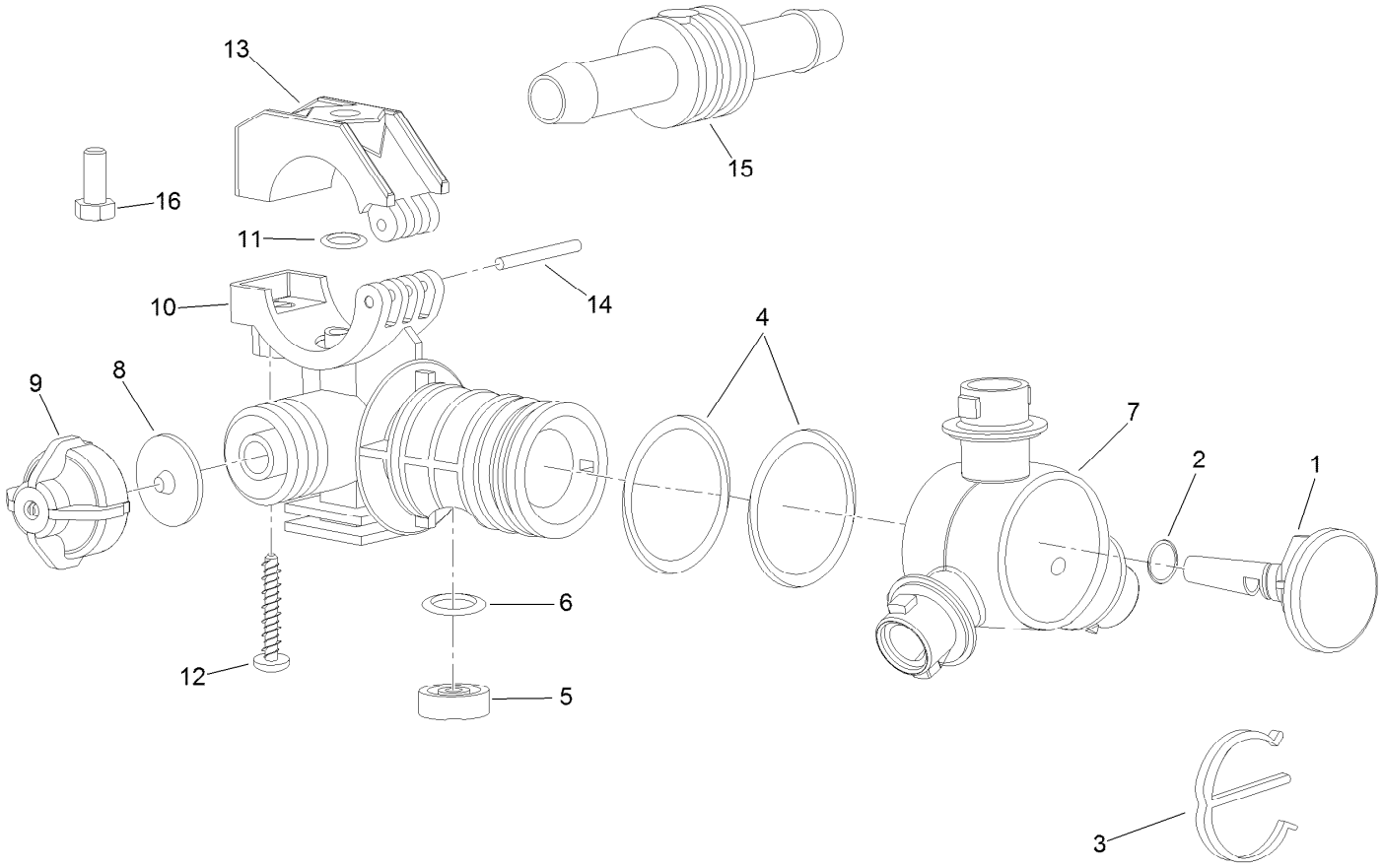

Double Turret Body Assembly No. 108-3727

Ref.	*Part Number*	*Qty.*	*Description*
1	95-9200	1	Plug
2	95-9198	1	O-Ring
3	95-9197	1	E-Clip
4	95-9199	2	O-Ring
5	108-3264	1	Seal-Viton
6	108-3265	1	O-Ring-Viton
7	95-9196	1	Turret
8	41003	1	Diaphragm

Ref.	*Part Number*	*Qty.*	*Description*
9	95-9193	1	Cap-Diaphram
10	95-9192	1	Body-Split Eyelet
11	95-9191	1	O-Ring
12	99-0811	1	Screw-Clamp
13	99-0812	1	Clamp-Upper
14	99-0814	1	Pin-Pivot
15	95-9202	1	Shank-Hose
16	322-3	1	Screw-HH

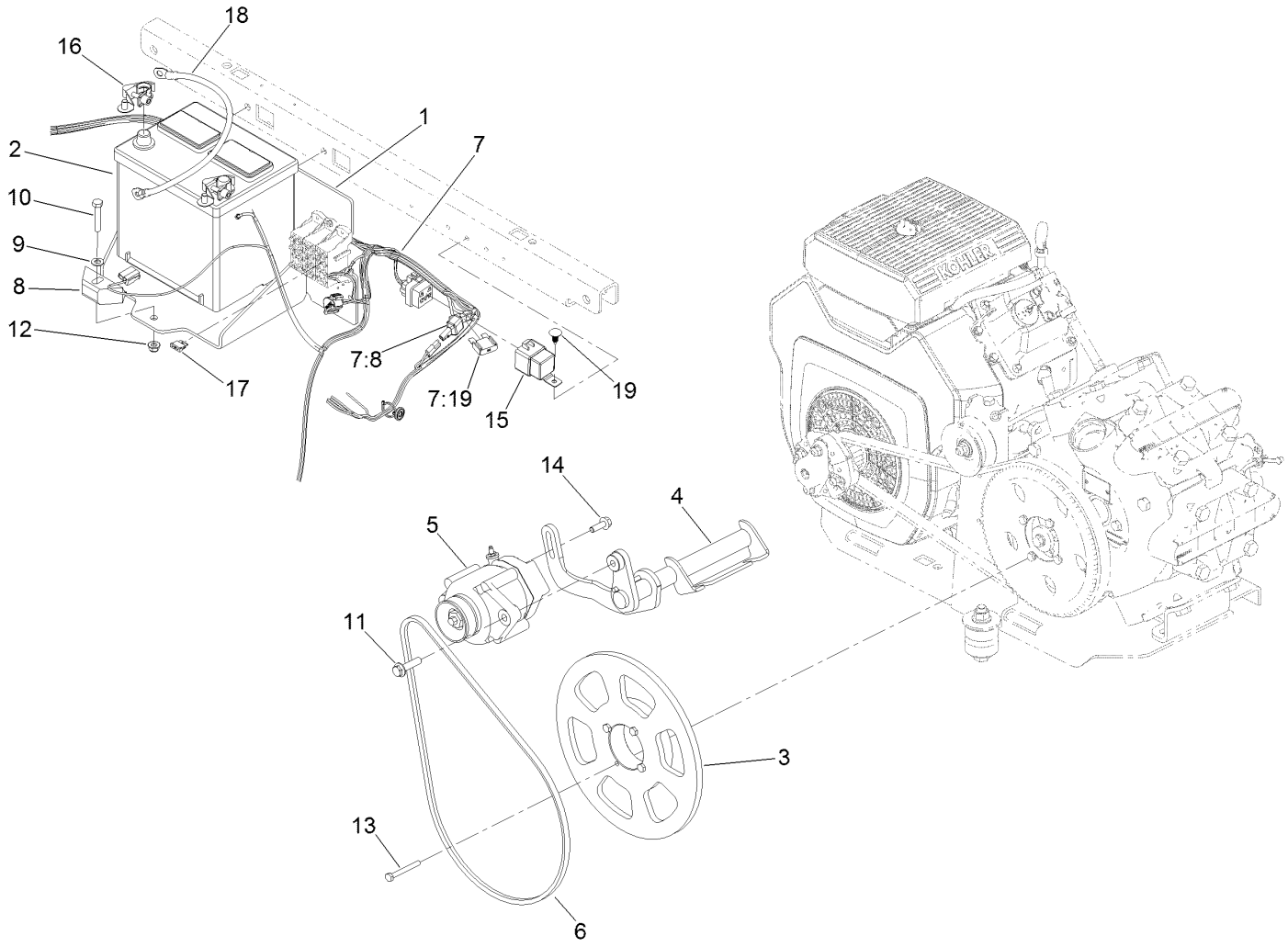

Electrical Assembly

Ref.	Part Number	Qty.	Description
1	136-2264-03	1	Bracket-Battery
2	106-5187	1	Battery-Dry
3	133-2804	1	Pulley
4	136-0483-03	1	Mount-Alternator
5	133-2851	1	Alternator
6	133-2763	1	Belt-Alternator
7	122-0794	1	Harness-Wire
7:8	100-4918	1	Diode
7:19	94-8002	1	Fuse-Blade, 50 Amp
8	138-6335	1	Retainer-Battery
9	3256-23	1	Washer-Plain

Ref.	Part Number	Qty.	Description
10	322-9	1	Screw-HH
11	3234-18	1	Screw-HHF
12	104-8300	1	Nut-HF, NI
13	100-5858	4	Screw-HH
14	33104-025	1	Screw-HHF
15	99-7430	1	Relay-Mini
16	119-9674	1	Terminal-Clamp, Quick
17	109355	1	Fuse-Blade, 15 Amp
18	122-0838	1	Cable-Battery, Positive
19	117-2382	1	Plug-Plastic

Notes:

Notes:



Count on it.