Form No. 3422-142 Rev B

Universal Groomer Drive Kit

Reelmaster® 3100-D 27-inch EdgeSeries Cutting Units

Model No. 03240—Serial No. 318000001 and Up

Installation Instructions

This product complies with all relevant European directives. For details, please see the Declaration of Incorporation (DOI) at the back of this publication.

Introduction

Read this information carefully to learn how to operate and maintain your product properly and to avoid injury and product damage. You are responsible for operating the product properly and safely.

You may contact Toro directly at www.Toro.com for product and accessory information, help finding a dealer, or to register your product.

Whenever you need service, genuine Toro parts, or additional information, contact an Authorized Service Dealer or Toro Customer Service and have the model and serial numbers of your product ready. Figure 1 identifies the location of the model and serial numbers on the product. Write the numbers in the space provided.

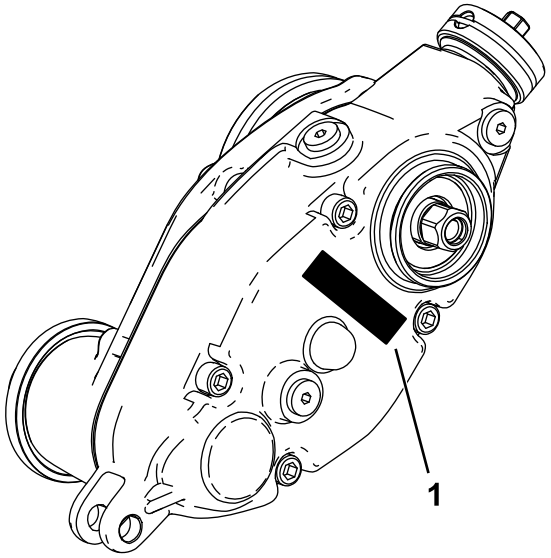

g241111

Figure 1

1. Model and serial number location

Model No. _____

Serial No. _____

© 2019—The Toro® Company
8111 Lyndale Avenue South
Bloomington, MN 55420

Register at www.Toro.com.

CE

Original Instructions (EN)
Printed in the USA
All Rights Reserved

3422-142 B

Loose Parts

Use the chart below to verify that all parts have been shipped.

Procedure	Description	Qty.	Use
1	No parts required	–	Prepare the machine.
2	No parts required	–	Gather the tools required for setup.
3	No parts required	–	Determine which side the groomer should be installed on.
4	Extended splined insert (right-hand threads) Extended splined insert (left-hand threads) Flange locknut (3/8 inch)	2 1 6	Prepare the cutting unit.
5	Weight bracket Hex-socket, button-head bolt (3/8 x 3/4 inch) Groomer drive box (left drive) Groomer drive box (right drive)	3 6 2 1	Install the weight bracket and groomer drive box.
6	Hex-socket bolt (3/8 x 3/4 inch) Pivot hub O-ring Idler assembly (left) Idler assembly (right) Jam locknut (3/8 inch)	6 3 3 1 2 6	Install the idler assembly.
7	Adjuster pin Cotter pin Left HOC bracket assembly Right HOC bracket assembly Flange locknut (3/8 with 5/8 inch hex)	6 6 3 3 6	Install the HOC bracket assemblies and the front roller.
8	Cap	3	Install the groomer drive cap (For universal groomer assemblies with no rear roller brush kit installed only).
9	Bolt (1/4 x 1-1/2 inches) Jam nut Shaft clamp	12 12 12	Install the groomer assembly (ordered separately) and optional broomer kit.
10	Carriage bolt (5/16 x 3-1/2 inches) Spacer Flange nut (5/16 inch) Weight	6 6 6 18	Install the weights (groomer only, with or without front grass baskets and rear cutting unit without rear grass basket).
11	Carriage bolt (5/16 x 3-1/2 inches) Spacer Flange nut (5/16 inch) Weight	6 6 6 12	Install the weights (with groomer and rear roller brush).

Procedure	Description	Qty.	Use
12	Carriage bolt (5/16 x 2-1/4 inches), Part No. 3230-7—sold separately	1	Install the weights (rear cutting unit with groomer only, with rear grass basket).
	Carriage bolt (5/16 x 3-1/4 inches), Part No. 3230-13—sold separately	1	
	Carriage bolt (5/16 x 4-1/2 inches), Part No. 3230-30—sold separately	1	
	Spacer	2	
	Flange nut (5/16 inch)	1	
	Locknut (5/16 inch), Part No. 3296-47—sold separately	2	
	Weight	2	
	Small weight (Part No. 132-0734-03—sold separately)	6	

1

Preparing the Machine

No Parts Required

Procedure

1. Park the machine on a level surface.
2. Engage the parking brake.
3. Shut off the engine and remove the key.

2

Gathering the Tools Required for Setup

No Parts Required

Procedure

- Torque wrench—5.2 to 6.8 N·m (46 to 60 in-lb)
- Torque wrench—115 to 129 N·m (85 to 95 ft-lb)
- Torque wrench—135 to 150 N·m (100 to 110 ft-lb)
- Reel driveshaft tool, Part No. TOR4074 (used only on 7-inch reels)

3

Determining the Setup

No Parts Required

Procedure

Use the following diagram to determine the position of the groomer kits and reel motors.

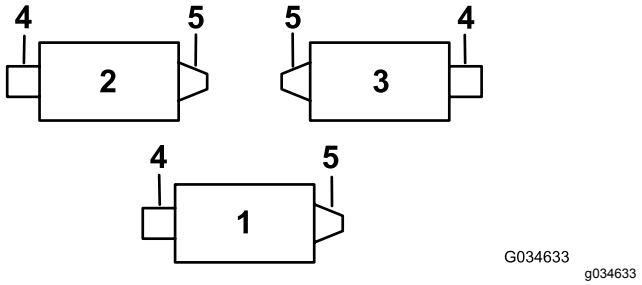

Figure 2

1. Cutting unit 1
2. Cutting unit 2
3. Cutting unit 3
4. Left-hand groomer kit
5. Reel motor
6. Right-hand groomer kit

Note: If a groomer kit and a rear roller-brush kit are going to be installed on the cutting unit, install the groomer kit first.

4

Preparing the Cutting Unit

Parts needed for this procedure:

2	Extended splined insert (right-hand threads)
1	Extended splined insert (left-hand threads)
6	Flange locknut (3/8 inch)

Procedure

Note: You may discard all removed parts unless otherwise stated.

1. Remove all cutting units from the traction unit; refer to your *Operator's Manual*.
2. Remove the carriage bolts and locknuts securing the height-of-cut (HOC) brackets to the cutting-unit side plates (Figure 3).

   Note: Save the carriage bolts to install the new height-of-cut brackets.

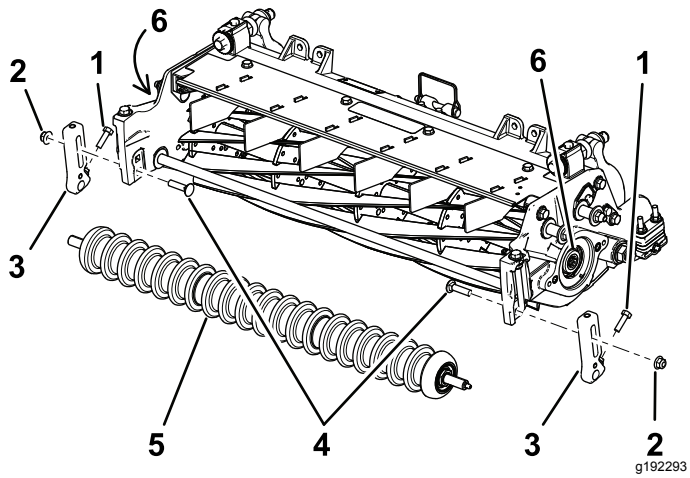

Figure 3

1. Screw
2. Locknut
3. Height-of-cut bracket
4. Carriage bolts
5. Front roller
6. Threaded inserts

3. Loosen the screws securing the height-of-cut brackets to the front-roller shaft (Figure 3).
4. Remove the existing height-of-cut brackets and the front roller from the cutting-unit side plates (Figure 3).

   Note: Save the front roller for later installation.

5. Restrain the reel for removal; refer to Restraining the Reel for Removing Threaded Inserts (page 18).
6. Remove and discard the existing splined insert from each end of the reel shaft using the reel driveshaft tool (Part No. TOR4074 for the 7-inch reel). Refer to Figure 3.

   Important: **The splined insert on the left side of the cutting unit has left-hand threads. The splined insert on the right side of the cutting unit has right-hand threads.**

   Important: **Clean the threads in the end of the reel shaft of any debris or grease before installing the kit splined insert and groomer box.**

7. Restrain the reel for installation; refer to Restraining the Reel Installing Threaded Inserts (page 19).
8. Apply medium-strength thread-locking compound (such as Blue Loctite® 243) to the threads of the new longer splined insert (Figure 4), and secure it to the reel shaft on the reel-motor side only. Torque the insert to 115 to 128 N·m (85 to 95 ft-lb).

   Important: **Allow the thread-locking compound to cure for 15 minutes before continuing the procedure.**

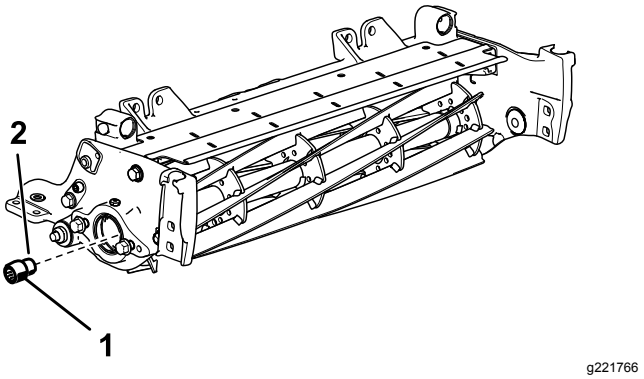

Figure 4

Right side of cutting unit shown

1. Extended splined insert (for reel-motor side) 115 to 128 N·m (85 to 95 ft-lb)
2. Medium-strength thread-locking compound

9. Remove the 2 flange-head bolts and washers securing the support rod, and remove the support rod (Figure 5).

   Note: Retain the flange-head bolts.

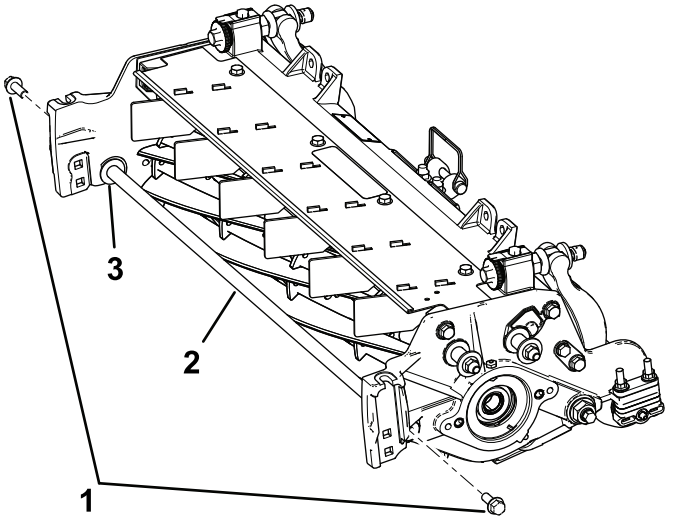

Figure 5

1. Flange-head bolts (2)
2. Support rod
3. Washer (2)

10. Install the 2 existing flange-head bolts from the inside of the cutting unit and secure them with the 3/8 inch flange locknuts provided.

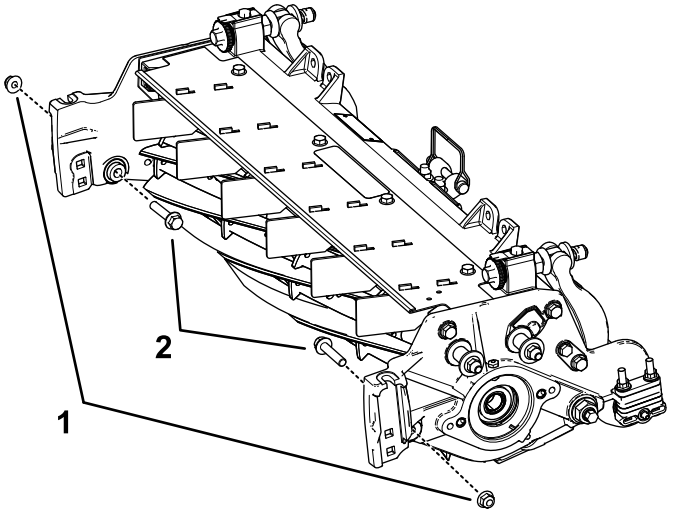

Figure 6

1. Flange locknut (3/8 inch)
2. Flange-head bolt

5

Installing the Weight Bracket and the Groomer Drive Box

Parts needed for this procedure:

3	Weight bracket
6	Hex-socket, button-head bolt (3/8 x 3/4 inch)
2	Groomer drive box (left drive)
1	Groomer drive box (right drive)

Procedure

1. Identify the left drive groomer drive boxes and the right-drive groomer drive boxes; refer to Figure 7.

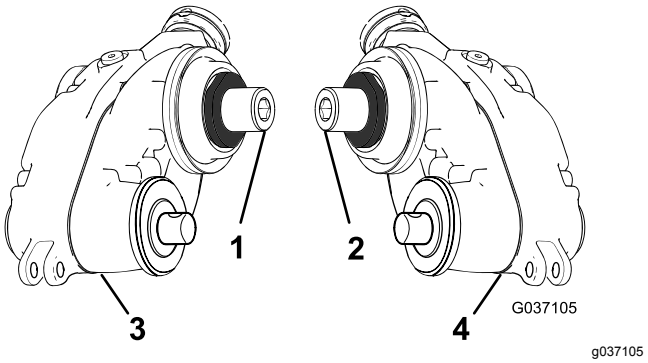

Figure 7

1. Right (yellow) adapter
2. Left (green) adapter
3. Groomer drive box—right drive
4. Groomer drive box—left drive

2. Secure the weight bracket to the reel using 2 hex-socket, button-head bolts (3/8 x 3/4 inch) as shown in Figure 8.

   Note: Attach the weight bracket to the side of the reel where you intend to mount the groomer drive box.

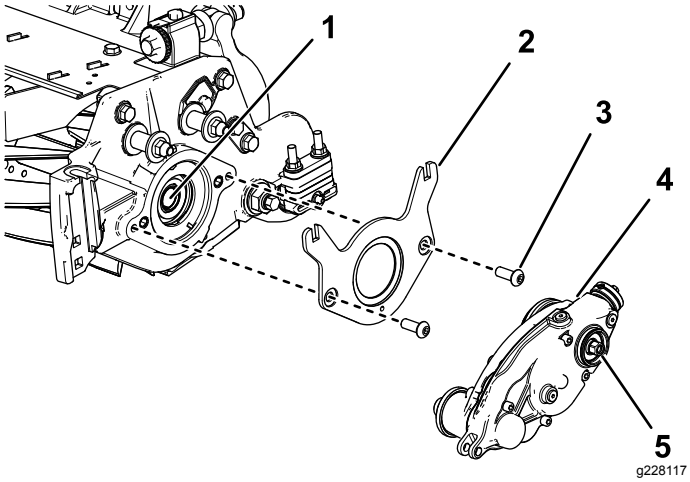

Figure 8

1. Internal reel-shaft
2. Weight bracket
3. Hex-socket, button-head bolt—3/8 x 3/4 inch (2)
4. Groomer drive box (left drive shown)
5. Hex-head (Torque to 135 to 150 N·m (100 to 110 ft-lb))

3. Apply medium-strength thread-locking compound (such as Blue Loctite® 243) to the threads of the internal reel-shaft (Figure 8).
4. Attach the groomer drive box to the reel shaft (Figure 8) using the hex-head on the groomer drive box.

   Important: **The reel threads on the left side of the cutting unit are left-handed, and the reel threads on the right side of the cutting unit are right-handed.**
5. Restrain the reel for installation; refer to Restraining the Reel Installing Threaded Inserts (page 19).
6. Torque the hex-head to 135 to 150 N·m (100 to 110 ft-lb).

   Important: **You must use a 6-point socket with heavy wall.**

   Important: **Do not use an impact wrench for this step.**

   Important: **Allow the thread-locking compound to cure for 15 minutes before continuing the procedure.**

6

Installing the Idler Assembly

Parts needed for this procedure:

6	Hex-socket bolt (3/8 x 3/4 inch)
3	Pivot hub
3	O-ring
1	Idler assembly (left)
2	Idler assembly (right)
6	Jam locknut (3/8 inch)

Procedure

1. Position the idler assembly on the opposite side of the reel from the groomer drive box.
2. Install the O-ring onto the pivot-hub assembly.
3. Apply anti-seize compound on the outside diameter of the pivot-hub assembly (Figure 9).

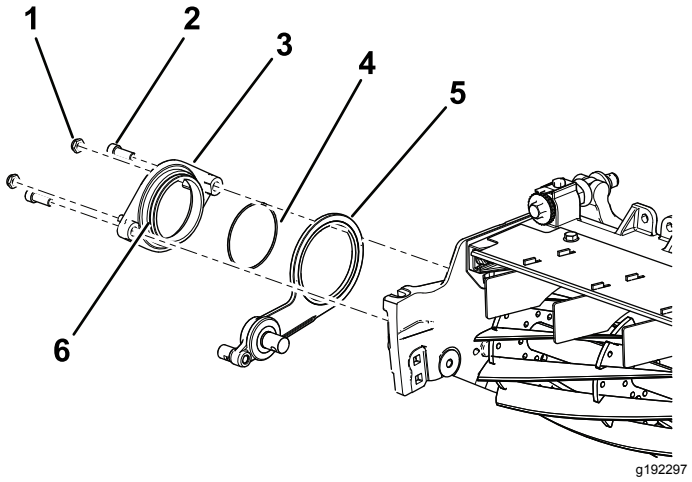

Figure 9

1. Jam locknut—3/8 inch (2)
2. Hex-socket bolt (3/8 x 3/4 inch)
3. Pivot hub
4. O-ring
5. Idler assembly (right side shown)
6. Apply anti-seize compound on the outside diameter of the hub.

4. Secure the pivot hub over the idler assembly to the reel using 2 hex-socket bolts (3/8 x 3/4 inch) (Figure 9).
5. Loosely install the 2 locknuts on the pivot hub (Figure 9).

7

Installing the HOC Bracket Assemblies and the Front Roller

Parts needed for this procedure:

6	Adjuster pin
6	Cotter pin
3	Left HOC bracket assembly
3	Right HOC bracket assembly
6	Flange locknut (3/8 with 5/8 inch hex)

Procedure

1. Loosely install the left and right HOC bracket assemblies and the front roller assembly to the cutting-unit side plates using the previously removed carriage bolts (Figure 10).

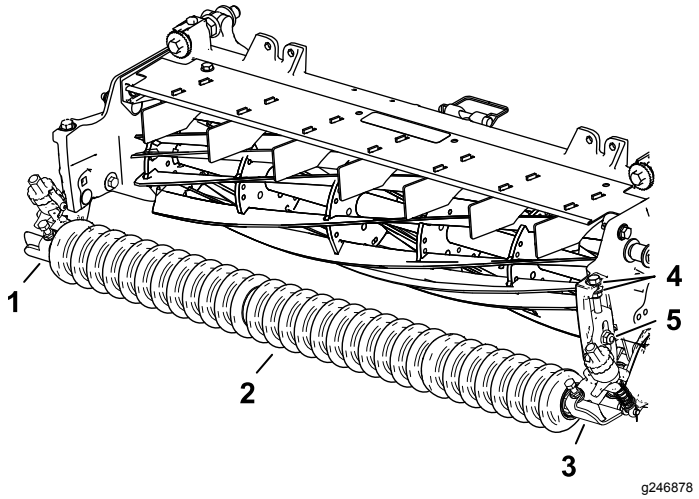

g246878

Figure 10

1. Right HOC bracket assembly
2. Front roller assembly
3. Left HOC bracket assembly
4. Washers
5. Carriage bolt and flange locknut (3/8 with 5/8 inch hex)

2. On the left side, slide the adjuster-arm rod of the HOC bracket into the gap on the groomer drive box and secure it with an adjuster pin and cotter pin as shown in Figure 11.

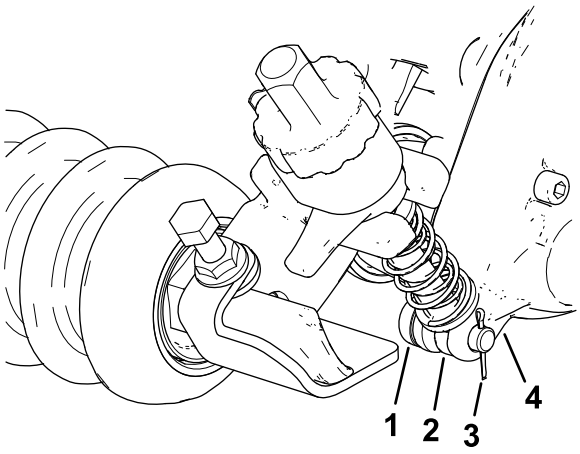

g232400

Figure 11

1. Adjuster pin
2. Adjuster-arm rod
3. Cotter pin
4. Groomer drive box

3. On the idler assembly side, align the adjuster-arm rod of the HOC bracket with the adjuster collar on the idler assembly and secure it with an adjuster pin and cotter pin (Figure 12).

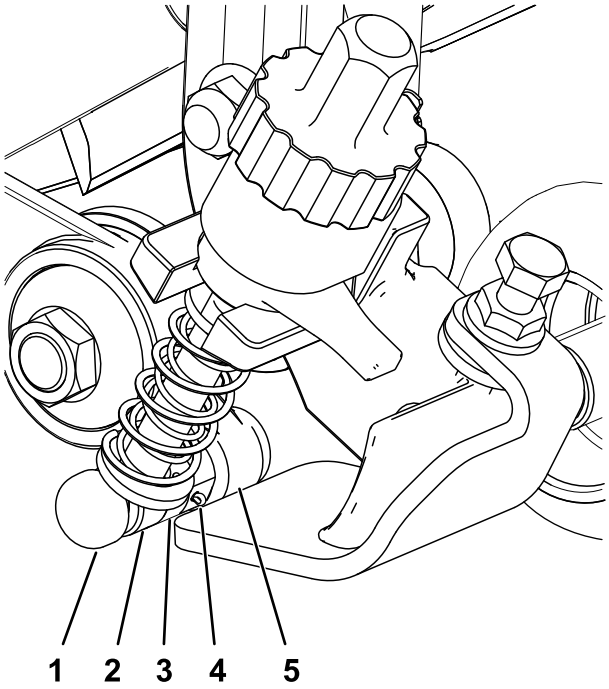

g232388

Figure 12

1. Adjuster pin
2. Adjuster-arm rod
3. Adjuster collar
4. Cotter pin
5. Idler assembly

4. Tighten the carriage bolts and locknuts securing the HOC bracket assemblies to the side plates (Figure 13).

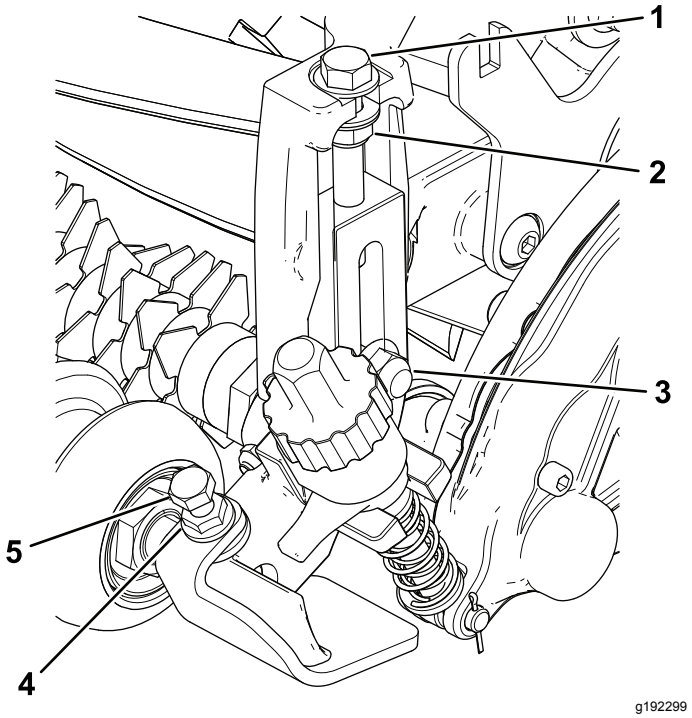

Figure 13

1. Adjusting bolt
2. Locknut
3. Carriage bolt and flange locknut (3/8 with 5/8 inch hex)
4. Flange nut
5. Cap screw

5. Tighten the locknut on the HOC adjuster bolt, then back off the locknut 1/2 turn (Figure 13).
6. Center the front roller between the HOC bracket assemblies and lock it in place with the cap screws and flange nuts (Figure 13).

8

Installing the Groomer Drive Cap

Parts needed for this procedure:

3	Cap

Procedure

Only for Universal Groomer assemblies with no rear roller brush kit installed:

1. Apply medium-strength cylindrical bonding retaining compound (such as Green Loctite 609®) around the snap ring groove and the outer diameter surface (Figure 14).
2. Install the cap as shown in Figure 14.

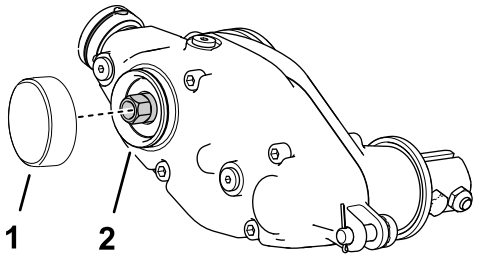

Figure 14

1. Cap
2. Apply medium-strength bonding compound

9

Installing the Groomer Assembly and Optional Broomer Kit

Groomer and Broomer Kits Come Separately

Parts needed for this procedure:

12	Bolt (1/4 x 1-1/2 inches)
12	Jam nut
12	Shaft clamp

Installing the Groomer Kit

Ordered Separately

Model Number	Groomer
03241	27-inch Groomer Blade Cartridge Kit

1. Obtain a groomer blade cartridge kit or a brush kit appropriate for your needs and cutting unit; refer to the table above.
2. Line up the groomer assembly with the drive-stub shafts of the groomer drive box and idler assembly (Figure 15).

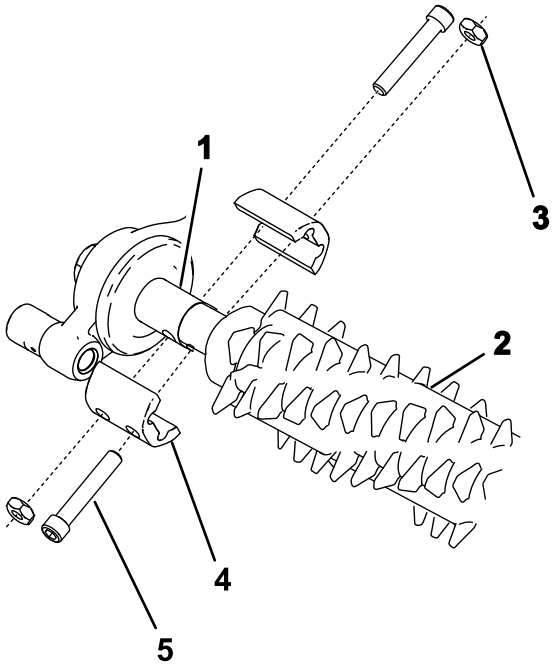

g240752

Figure 15

1. Drive-stub shaft
2. Groomer assembly
3. Jam nut (4)
4. Shaft clamp (4)
5. Bolt (4) (Torque to 5-7 N·m (46-60 in-lb))

3. Secure the groomer to the machine as shown in Figure 15 using 4 bolts (1/4 x 1-1/2 inches), 4 jam nuts, and 4 shaft clamps.
4. Torque the bolts to 5 to 7 N·m (46 to 60 in-lb).

Installing the Broomer Kit

Part Number	Broomer Kit
133-8222	27-inch Broomer Kit

1. Obtain the optional broomer kit for groomer blade cartridges appropriate for your needs and cutting unit; refer to the table above.
2. Loosen the groomer blade-retaining nuts on each end of the groomer shaft (Figure 16).

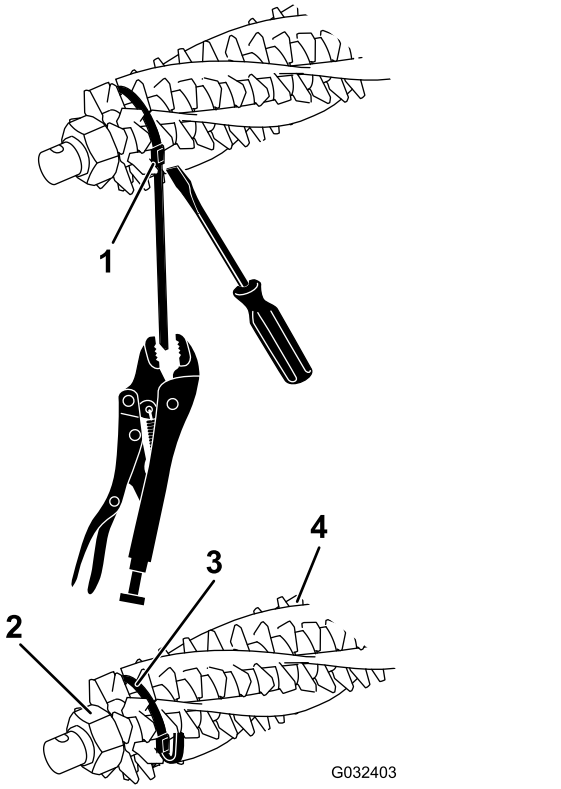

g032403

Figure 16

1. Strap buckle
2. Retaining nut
3. Strap
4. Brush

3. From 1 side of the groomer reel, slide a brush into each groove around the full length of the groomer reel (Figure 17).

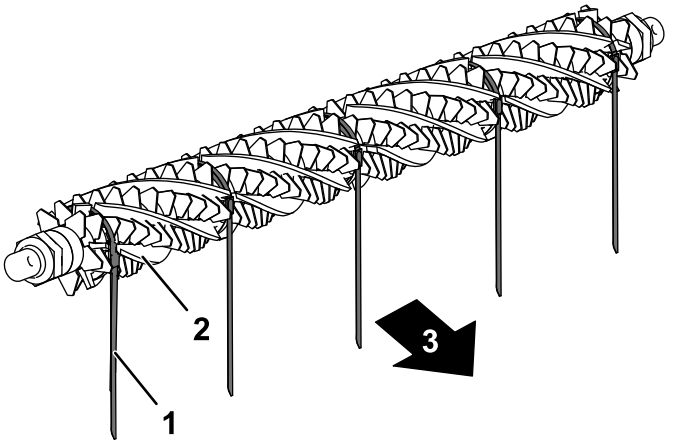

g232518

Figure 17

1. Strap
2. Brush
3. Toward rear of machine

4. Verify that the brushes are seated in the groomer blade slots (Figure 16 and Figure 18).

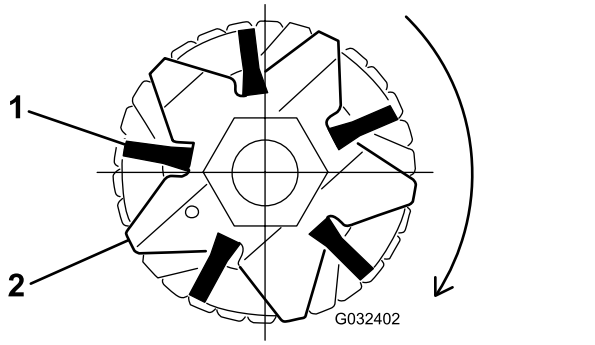

g032402

Figure 18

1. Brush
2. Blade

5. Loosely wrap the straps, as shown in Figure 16, around the groomer reel shaft and brushes, inserting the straps in the grooves in the brushes Figure 18.

   Position the brushes so that the straps are between the following blades: 2 and 3; 12 and 13; 23 and 24 or 24 and 25; 35 and 36, and 45 and 46.

   Important: **You must wrap the straps around the groomer blade and brush assembly in the primary rotating direction. Figure 17 shows the straps installed for forward rotation.**

   Note: If the broomer brushes are not seated properly in the blade slots, loosen the groomer-blade retaining nuts on each end of the groomer shaft, position the broomer brushes properly in the blade slots, and tighten the groomer-blade retaining nuts (Figure 16).

6. Tighten the groomer blade retaining nuts; torque them to 45.2 N·m (400 in-lb).
7. While pushing a screwdriver against the strap buckle, grasp the strap with a locking pliers and pull the straps tight until they lock into the brush grooves (Figure 16).
8. Trim the strap so that it is 6 mm (1/4 inch) from the buckle and fold the excess strap over the buckle.

10

Installing the Weights

Groomer Only, with or without Front Grass Baskets and Rear Cutting Unit without Rear Grass Basket

Parts needed for this procedure:

6	Carriage bolt (5/16 x 3-1/2 inches)
6	Spacer
6	Flange nut (5/16 inch)
18	Weight

Procedure

For cutting units with only the groomer kit installed (no rear roller brush kit and no rear grass basket installed), refer to Figure 19.

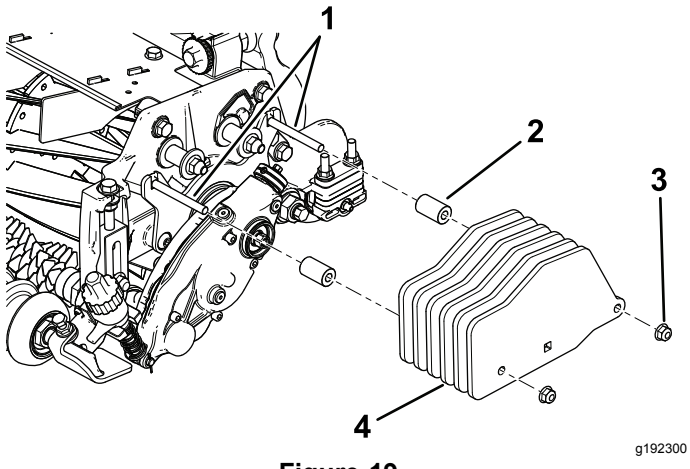

Figure 19
Groomer only

1. Bolts (5/16 x 3-1/2 inch)
2. Spacer (2)
3. Flange nut—5/16 inch (2)
4. Weight (6)

11

Installing the Weights

Groomer and Rear Roller Brush installed

Parts needed for this procedure:

6	Carriage bolt (5/16 x 3-1/2 inches)
6	Spacer
6	Flange nut (5/16 inch)
12	Weight

Procedure

For cutting units with the groomer kit and the rear roller brush kit installed, refer to Figure 20.

Note: The kit includes 6 weights for each cutting unit, however, this setup requires only 4 weights per cutting unit.

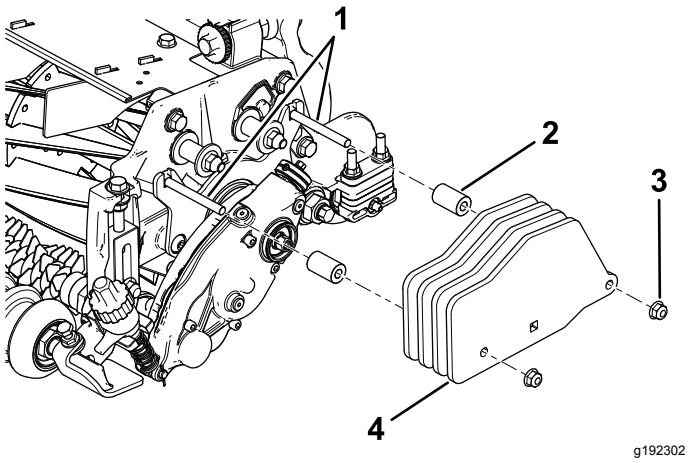

Figure 20
Groomer with rear roller brush kit installed

1. Bolts (5/16 x 3 inches)
2. Spacer (2)
3. Flange nut—5/16 inch (2)
4. Weight (4)

12

Installing the Weights

Rear Cutting Unit with Groomer Only, and with Rear Grass Basket)

Parts needed for this procedure:

1	Carriage bolt (5/16 x 2-1/4 inches), Part No. 3230-7—sold separately
1	Carriage bolt (5/16 x 3-1/4 inches), Part No. 3230-13—sold separately
1	Carriage bolt (5/16 x 4-1/2 inches), Part No. 3230-30—sold separately
2	Spacer
1	Flange nut (5/16 inch)
2	Locknut (5/16 inch), Part No. 3296-47—sold separately
2	Weight
6	Small weight (Part No. 132-0734-03—sold separately)

Procedure

For a rear cutting unit with the groomer kit and the rear grass basket installed (no rear roller brush kit), refer to Figure 21.

Also install the weights on the front cutting units.

Note: For front cutting units with the groomer kit and the front grass baskets installed (no rear roller brush kit), refer to Figure 19.

Note: The center cutting unit does not work with both the rear roller brush kit and the rear grass basket kit.

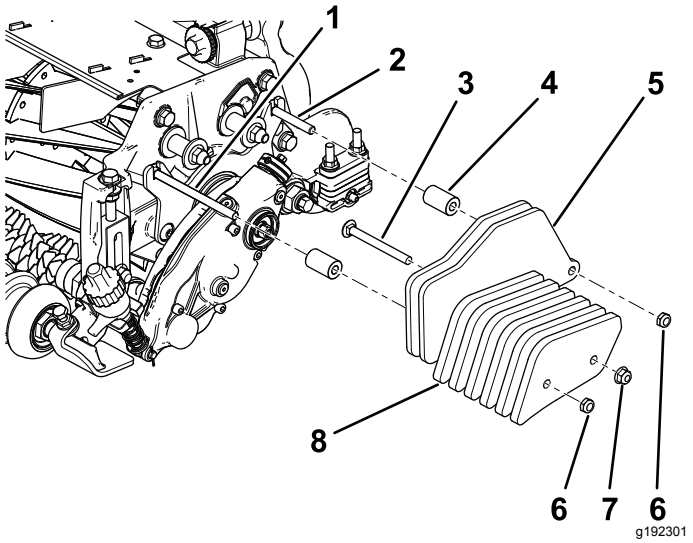

Figure 21

Rear cutting unit with groomer and rear grass basket installed

1. Bolt (5/16 x 4-1/2 inches), sold separately
2. Bolt (5/16 x 2-1/4 inches), sold separately
3. Bolt (5/16 x 3-1/4 inches), sold separately
4. Spacer (2), sold separately
5. Weight (2), supplied with the kit
6. Locknut (5/16 inch), sold separately
7. Flange nut (5/16 inch), sold separately
8. Small weight (4), sold separately

Operation

Introduction

Grooming is performed in the turf canopy above the soil level. Grooming promotes vertical growth of grass plants, reduces grain, and severs stolons, producing a denser turf. Grooming produces a more uniform and tighter playing surface for faster and truer action of the golf ball.

Grooming should not be considered as a replacement for verticutting. Verticutting is generally a more rigorous and periodic treatment that can temporarily damage the playing surface, while grooming is a routine and gentler treatment designed to manicure the turf.

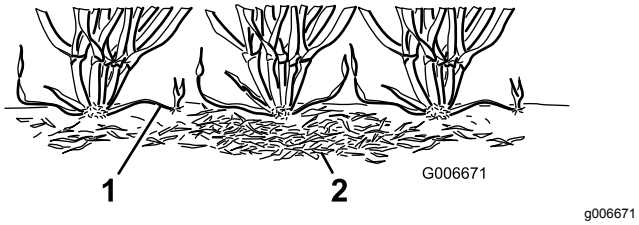

Figure 22

1. Grass runners (stolons) 2. Thatch

Grooming brushes are less intrusive than conventional grooming blades when adjusted to lightly contact the turf canopy. Brushing may be better for the ultra-dwarf cultivars, since these grass types have an upright growth pattern and do not fill in well through horizontal growth. Brushes can injure leaf tissue if they are set to penetrate too deeply into the canopy.

Groomer blades should never penetrate the soil. They are effective in cutting runners and removing thatch.

Because grooming injures leaf tissue, avoid grooming during periods of high stress. Cool season species, such as creeping bent grass and annual blue grass, should not be groomed during high-temperature (and high-humidity) periods in midsummer.

Many variables affect the performance of grooming, including the following:

- The time of the year (i.e., the growing season) and the weather pattern
- The general condition of the grass
- The frequency of grooming/cutting—both how many cuttings per week and how many passes per cutting
- The height-of-cut setting on the main reel
- The height/depth setting on the grooming reel
- How long the grooming reel has been in use
- The type of grass
- The overall management program (i.e., irrigation, fertilizing, spraying, coring, overseeding, etc.)
- Traffic
- Stress periods (i.e., high temperatures, high humidity, unusually high traffic)

These factors can vary from fairway to fairway. Inspect the mowing area frequently and change the grooming practice as needed.

Note: Using the groomer reel improperly or too aggressively (i.e., too deep or too frequent grooming) may unnecessarily stress the turf, causing severe turf damage. Use the groomer cautiously.

Note: Continue changing the direction of cut whenever you use the groomer. This enhances the effects of the grooming.

Note: Operate the groomer in a straight line as much as possible. Use caution when turning while operating the groomer.

Adjusting the Groomer Height

⚠ DANGER

Contact with the reels or other moving parts can result in personal injury.

- **Before making any adjustments to the cutting units, disengage the reels, set the parking brake, shut off the engine, and remove the key.**
- **Keep your hands and clothing away from the reels or other moving parts.**

1. Park the machine on a clean and level surface, lower the cutting units completely to the ground, shut off the engine, engage the parking brake, and remove the key.
2. Make sure that the rollers are clean and the cutting unit is set to the desired height-of-cut (see your cutting unit *Operator's Manual*).
3. Rotate the quick-up levers (Figure 23) to the ENGAGED position (the handle points toward the front of the cutting unit.

   Important: **Use the Height-of-Cut (HOC) and Height-of-Groom (HOG) recommended range chart for setting the gauge bar.**

4. At 1 end of the groomer reel, measure the distance from the lowest tip of the groomer blade to the working surface (Figure 23). Turn the height adjuster knob (Figure 23) to raise or lower the groomer blade tip to the desired height.

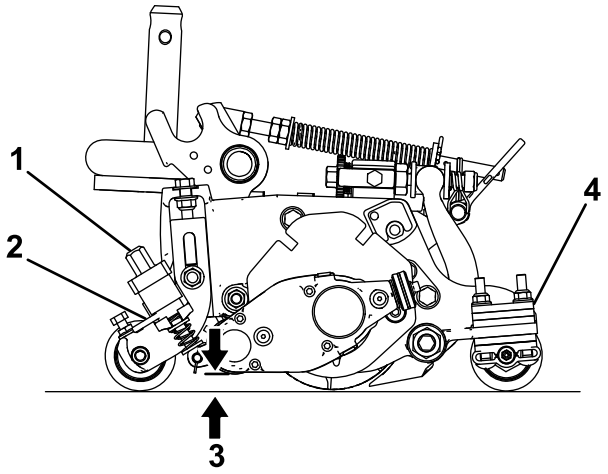

g240964

Figure 23

1. Height adjuster knob
2. Quick-up lever
3. Groomer height (HOG)
4. Number of rear roller spacers (below side plate pad)

5. Repeat step 4 at the opposite end of the groomer, then check the setting on the first side of groomer.

   The height setting on both ends of the groomer should be identical. Adjust the height as required.

Height-of-Cut (HOC) and Height-of-Groom (HOG) Recommended Range

Height-of-Cut (mm)	Height-of-Cut (inch)	Number of Rear Roller Spacers	Recommended HOG = HOC Groomer Engagement (mm)	Recommended HOG = HOC Groomer Engagement (inch)
6.3	**0.250**	0	3.1 to 6.3	0.125 to 0.250
9.5	**0.375**	0	4.7 to 9.5	0.187 to 0.375
9.5	**0.375**	1	4.7 to 9.5	0.187 to 0.375
12.7	**0.500**	0	6.3 to 12.7	0.250 to 0.500
12.7	**0.500**	1	6.3 to 12.7	0.250 to 0.500
12.7	**0.500**	2	6.3 to 9.5	0.250 to 0.375
15.8	**0.625**	0	9.5 to 15.8	0.375 to 0.625
15.8	**0.625**	1	9.5 to 15.8	0.375 to 0.625
15.8	**0.625**	2	9.5 to 12.7	0.375 to 0.500
19.0	**0.750**	1	12.7 to 19.0	0.500 to 0.750
19.0	**0.750**	2	12.7 to 19.0	0.500 to 0.750
19.0	**0.750**	3	12.7 to 15.8	0.500 to 0.625
22.2	**0.875**	1	15.8 to 22.2	0.625 to 0.875
22.2	**0.875**	2	15.8 to 22.2	0.625 to 0.875
22.2	**0.875**	3	15.8 to 19.0	0.625 to 0.750
25.4	**1.00**	2*	19.0 to 25.4	0.750 to 1.00
25.4	**1.00**	3	19.0 to 25.4	0.750 to 1.00
25.4	**1.00**	4	19.0 to 22.2	0.750 to 0.875

Note: Maximum HOG recommended is half the HOC to 6 mm (1/4 inch) maximum engagement

***** Move the groomer front height-of-cut (HOC) bracket to the bottom (cutting unit location) side-plate hole.

Changing the Groomer Operating Direction

The groomer has 3 settings: NEUTRAL, FORWARD, and REVERSE. To change the direction of the groomer, turn the knob at the end of the groomer drive box and align the desired position with the adjustment notch.

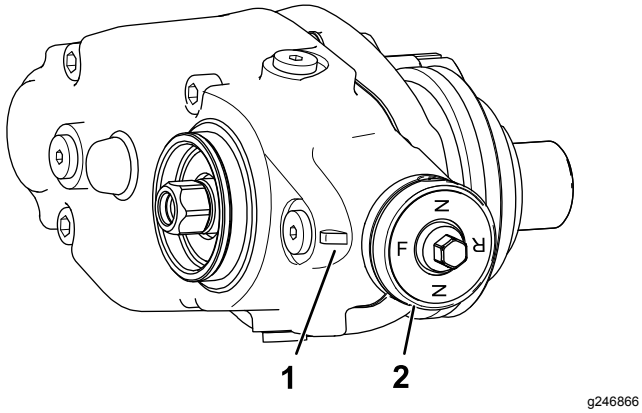

Figure 24

1. Adjustment notch
2. Knob

Testing the Groomer Performance

Important: **Improper or over-aggressive use of the grooming reel (i.e., too deep or too frequent grooming) may cause unnecessary stress on the turf, leading to severe damage. Use the groomer cautiously.**

⚠ DANGER

Contact with the reels or other moving parts can result in personal injury.

- **Before making any adjustments to the cutting units, disengage the reels, set the parking brake, shut off the engine, and remove the key.**
- **Keep your hands and clothing away from the reels or other moving parts.**

Determine the performance of the groomer before putting it into regular use.

1. Set the main cutting reels to the height-of-cut setting that you would normally use without the grooming reel. Use a Wiehle roller on the front and a full roller on the rear.

   The amount of grass removed is a key indicator in determining the height/depth setting of the grooming reel.
2. Set each of the grooming reels to the desired height setting.
3. Examine the test area and determine if the groomed areas gives the desired results. If not, increase or decrease the height of the groomers and make another test pass.

Check the test area 2 or 3 days after the first grooming for general condition and damage. If the groomed areas are turning yellow and brown, and the non-groomed areas are green, then the grooming was too aggressive.

Maintenance

⚠ DANGER

Contact with the reels or other moving parts can result in personal injury.

- **Before making any adjustments to the cutting units, disengage the reels, engage the parking brake, shut off the engine, and remove the key.**
- **Keep your hands and clothing away from the reels or other moving parts.**

Changing the Gearbox Lubricant

Service Interval
After the first 100 hours
Every 500 hours / Yearly (Whichever comes first)

1. Clean the external surfaces of the groomer housing.

   Important: **Ensure that there is no dirt or clippings on the outside of the groomer housing; if debris gets inside of the groomer it can damage the gearbox.**
2. Remove the drain plug on the bottom of the housing (Figure 27).
3. Remove the fill plug on the side of the housing and loosen the air-vent plug on the top so air can pass through (Figure 27).
4. Align a suitable container beneath the oil-drain port to catch drained oil.
5. Tip the cutting unit back onto the kickstand until the drain port is at the bottom to ensure complete drainage (Figure 25).

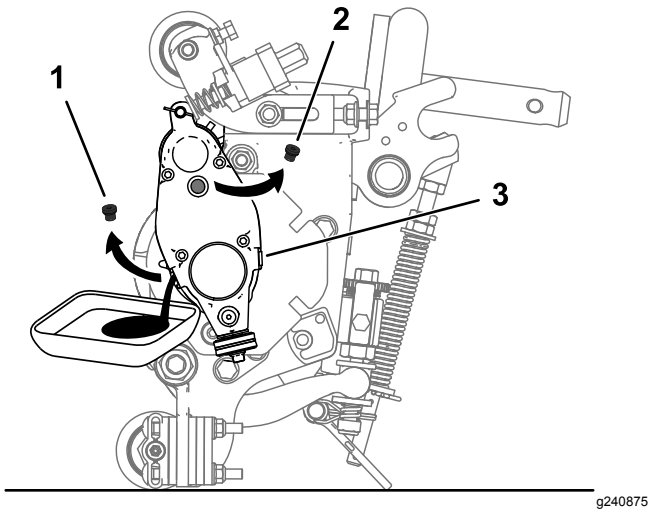

Figure 25

1. Remove the drain plug from the drain port.
2. Remove the fill plug from the fill port.
3. Loosen the air-vent plug.

6. Rock the cutting unit back and forth to ensure complete drainage. When the oil is completely drained, place the cutting unit on a level surface.
7. Install the drain plug.
8. Use a syringe (Part No. 137-0872) to fill the drive box with 80-90W oil (approximately 90 cc).

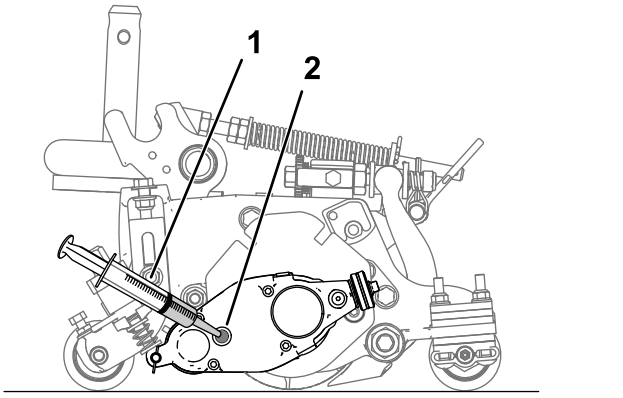

Figure 26

1. Syringe with 80-90W oil
2. Fill port

9. Install the fill plug and tighten the air-vent plug.
10. Torque all plugs to 3.62 to 4.75 N·m (32 to 42 in-lb).

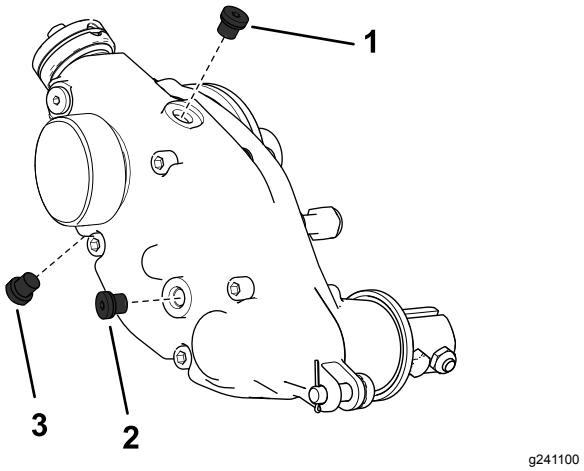

Figure 27

Right side groomer box shown

1. Air-vent plug
2. Fill plug
3. Drain plug

Removing the Groomer Drive Box

Note: Retain all removed parts for later installation unless otherwise stated.

Important: **If you have any issues removing the groomer drive box, refer to your traction unit *Service Manual* or contact your authorized Toro distributor.**

1. Remove the cap from the groomer.
2. Remove the clamp bolts connecting the groomer to the drive box (Figure 15).
3. Remove the adjuster pin and cotter pin connecting the groomer drive box to the adjuster arms (Figure 28).

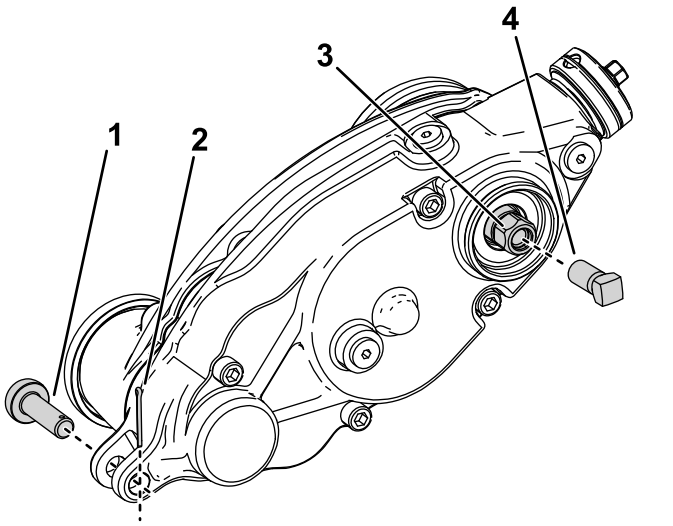

Figure 28

1. Adjuster pin
2. Cotter pin
3. Groomer drive hex-head
4. Reinforcement screw

4. Restrain the reel for removal; refer to Restraining the Reel for Removing Threaded Inserts (page 18).
5. Install the reinforcement screw (Part No. 1-803022—sold separately) to the internal threads of the groomer drive hex head and torque to 13.5 N·m (120 in-lbs) as shown in Figure 28.
6. Remove the groomer drive box from the cutting reel by turning the groomer drive hex-head (Figure 28).

   Important: **If the groomer drive box is installed on the right side of a cutting unit, turn the groomer drive hex-head counter-clockwise (right-hand thread) to remove the drive-box shaft from cutting unit.**

   Important: **If the groomer drive box is installed on the left side of a cutting unit, turn the groomer drive hex-head clockwise (left-hand thread) to remove drive-box shaft from cutting unit**

   Important: **You must use a 6-point socket with heavy wall.**

Cleaning the Grooming Reel

Service Interval: After each use

Clean off the grooming reel after using it by spraying it with water. Do not direct the water stream directly at the groomer bearing seals. Do not permit the grooming reel to stand in water so that the components rust.

Inspecting the Blades

Service Interval: Before each use or daily

Inspect the grooming-reel blades frequently for damage and wear. Straighten bent blades with a pliers and replace worn blades. When inspecting the blades, check to see that nuts on the right and left blade-shaft ends are tight.

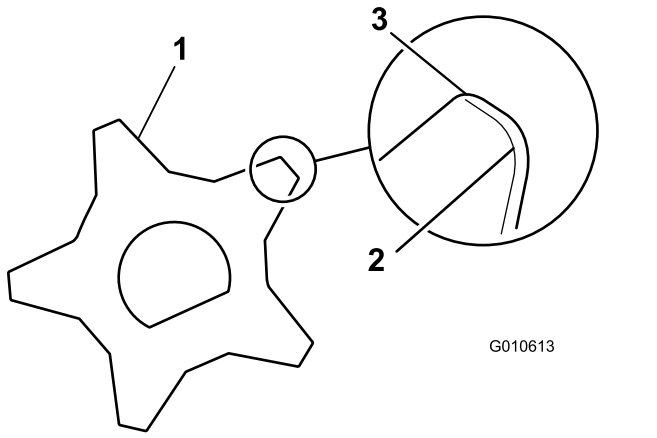

Figure 29

1. Grooming blade
2. Dull (rounded) edges
3. Sharp edges

Restraining the Reel

⚠ WARNING

The cutting reel blades are sharp and capable of amputating hands and feet.

- **Keep your hands and feet outside of the reel.**
- **Ensure that the reel is restrained before servicing it.**

Restraining the Reel for Removing Threaded Inserts

1. Loosen the shield-bolt on the left side of the cutting unit and raise the rear shield (Figure 30).

2. Insert a long-handled pry bar (recommended 3/8" x 12" with screwdriver handle) through the back of the cutting reel, closest to the side of the cutting unit that you will be torquing (Figure 30).
3. Place the pry bar against the weld side of the reel support plate (Figure 30).

   Note: Insert the pry bar between the top of the reel shaft and the backs of 2 reel blades so that the reel will not move.

   Important: **Do not contact the cutting edge of any blades with the pry bar; this may damage the cutting edge and/or cause a high blade.**

   Important: **The insert on the left side of the cutting unit has left-hand threads. The insert on the right side of the cutting unit has right-hand threads.**

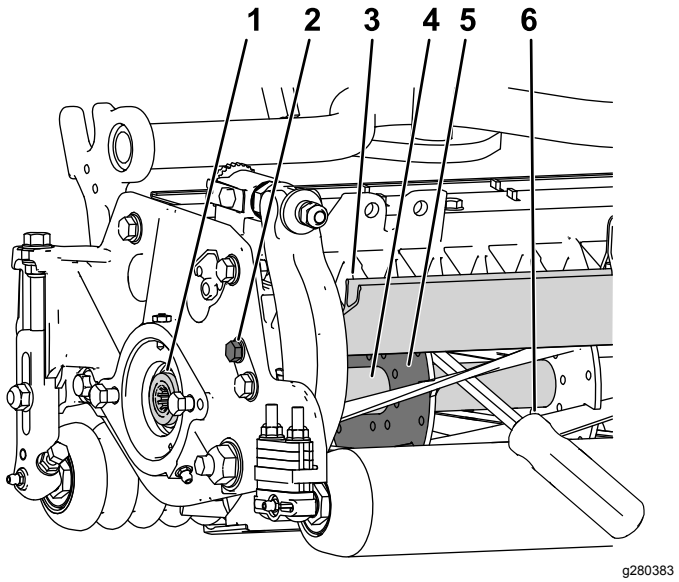

Figure 30

1. Threaded insert for removal
2. Loosen the shield bolt.
3. Rear shield
4. Reel shaft
5. Reel support plate
6. Pry bar inserted along the weld side of the reel support plate.

4. Rest the handle of the pry bar against the rear roller.
5. Complete the removal of the threaded insert while ensuring that the pry bar stays in place, then remove the pry bar.
6. Lower the rear shield and tighten the shield-bolt.

Restraining the Reel Installing Threaded Inserts

1. Insert a long-handled pry bar (recommended 3/8" x 12" with screwdriver handle) through the front of the cutting reel, closest to the side of the cutting unit that you will be torquing (Figure 31).
2. Place the pry bar against the weld side of the internal cutting reel reinforcement (Figure 31).

   Note: The pry bar should contact a blade at the front, the reel shaft, and a blade at the back of the back of the reel, locking it in place.

   Important: **Do not contact the cutting edge of any blades with the pry bar; this may damage the cutting edge and/or cause a high blade.**

   Important: **The insert on the left side of the cutting unit has left-hand threads. The insert on the right side of the cutting unit has right-hand threads.**

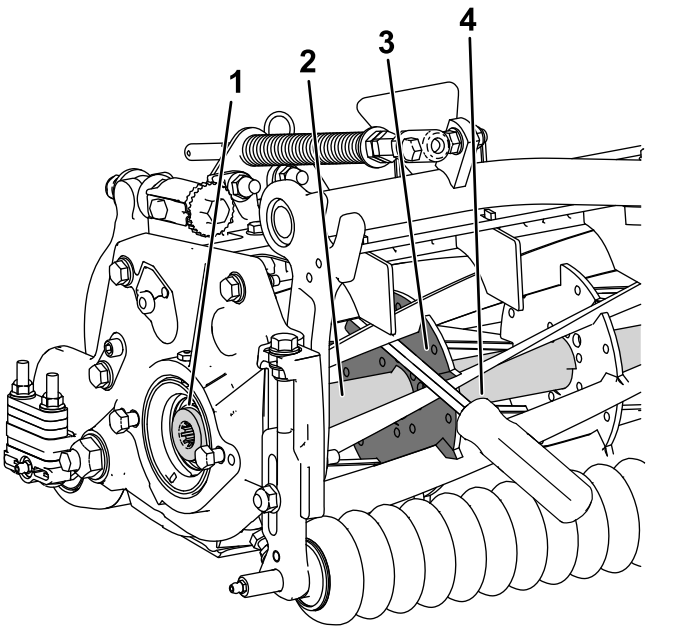

Figure 31

1. Threaded insert for installation
2. Reel shaft
3. Weld side of support plate
4. Pry bar

3. Rest the handle of the pry bar against the roller
4. Per the insert's installation instructions and torque requirements, complete the installation of the threaded insert while ensuring that the pry bar stays in place, then remove the pry bar.

Declaration of Incorporation

The Toro Company, 8111 Lyndale Ave. South, Bloomington, MN, USA declares that the following unit(s) conform(s) to the directives listed, when installed in accordance with the accompanying instructions onto certain Toro models as indicated on the relevant Declarations of Conformity.

Model No.	Serial No.	Product Description	Invoice Description	General Description	Directive
03240	—	Universal Groomer Drive Kit, Reelmaster 3100-D Edge Series Cutting Units	RM3100 UNIVERSAL GROOMER KIT (SET OF 3)	Groomer Kit	2006/42/EC

Relevant technical documentation has been compiled as required per Part B of Annex VII of 2006/42/EC.

We will undertake to transmit, in response to requests by national authorities, relevant information on this partly completed machinery. The method of transmission shall be electronic transmittal.

This machinery shall not be put into service until incorporated into approved Toro models as indicated on the associated Declaration of Conformity and in accordance with all instructions, whereby it can be declared in conformity with all relevant Directives.

Certified:



John Heckel
Sr. Engineering Manager
8111 Lyndale Ave. South
Bloomington, MN 55420, USA
March 3, 2018

Authorized Representative:

Marcel Dutrieux
Manager European Product Integrity
Toro Europe NV
Nijverheidsstraat 5
2260 Oevel
Belgium