TORO

1968

MODEL NOS. 18212–800001 & UP

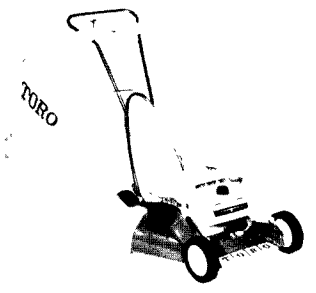

19" WHIRLWIND H.P. - Fingertip Start

REFERENCE DRAWING AND PARTS LIST

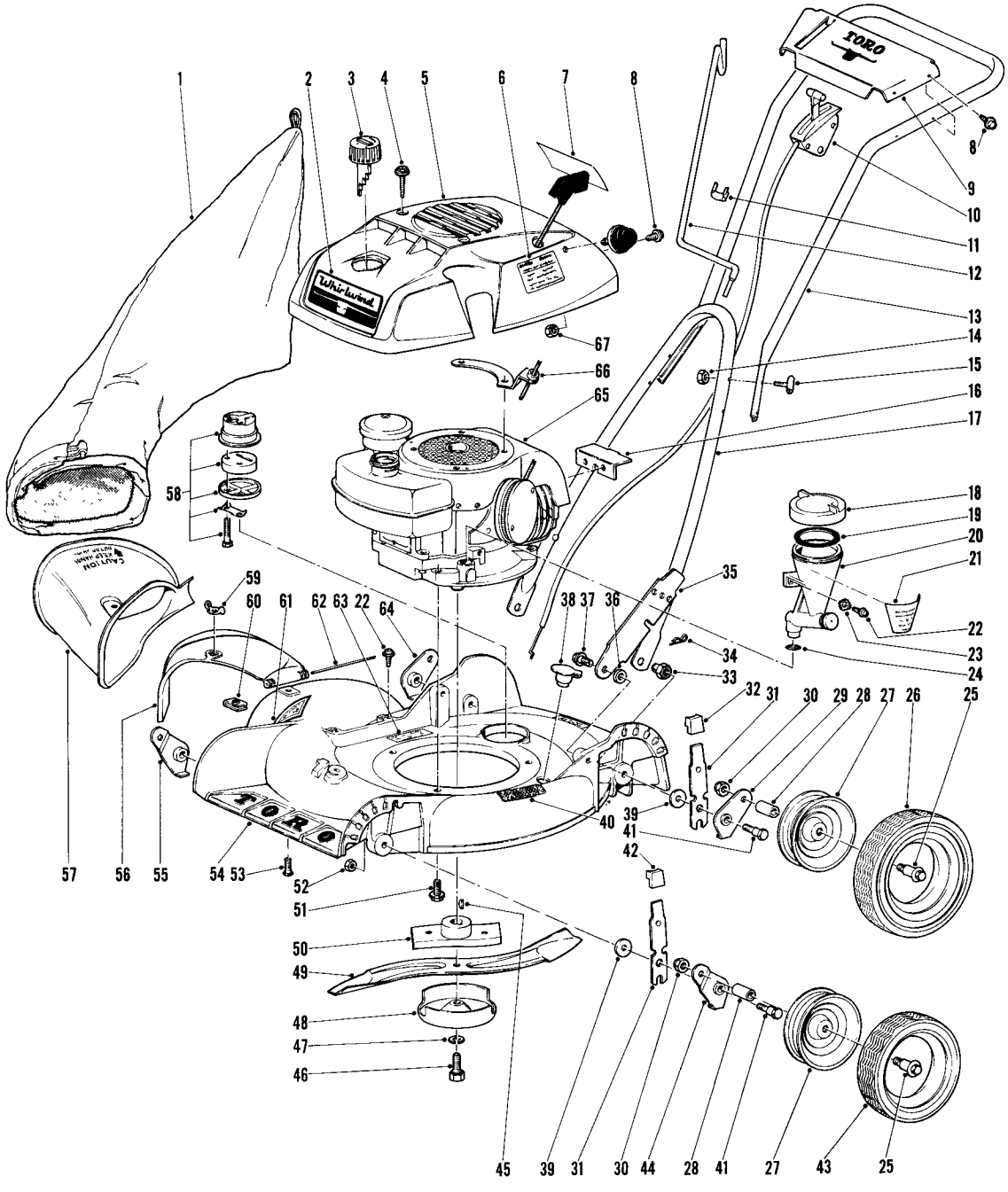

COPYRIGHT 1967 BY
TORO MANUFACTURING CORPORATION
MINNEAPOLIS, MINN. 55420 – U.S.A.

19'' FINGERTIP START MAIN FRAME PARTS LIST

Ref. No.	Part No.	Description	No. Used
1	81064	Bag, Set of 2	1
2	5-3304	Decal - Whirlwind	1
3	5-3460	Assembly, Gas Cap	1
4	32104-88	Screw, Self Tapping	2
5	5-3331	Shroud	1
6	5-3342	Decal - Start & Prime	1
7	5-3335	Decal	1
8	32104-76	Screw, Self Tapping	5
9	5-0640	Escutcheon	1
10	5-3317	Throttle Control	1
11	218-75	Clip	1
12	3-0690	Hanger	1
13	5-0645	Handle, Upper	1
14	32146-8	Locknut	4
15	3-2654	Screw, Handle	4
16	5-3307	Bracket, Rear	1
17	3-9430	Handle, Lower	1
18	3-8429	Reservoir Cap w/Ring	1
19	5-1391	"O" Ring	1
20	5-0625	Reservoir, Oil	1
21	5-2947	Decal, Oil Reservoir	1
22	32104-75	Screw, Self Tapping	4
23	3290-261	Washer	2
24	237-65	"O" Ring	1
25	3-2652	Bolt, Wheel	4
26	4-2600	Tire, Rear	2
27	3-2563	Assembly, Wheel & Bushing	4
28	3-2664	Bushing	4
29	3-2634	Arm, Pivot	1
30	3296-5	Stop Nut	4
31	3-2637	Spring Arm	4
32	5-0656	Knob	2
33	3-6482	Nut, Pivot	2
34	3290-255	Hair Pin Cotter	2
35	5-2446	Latch, Handle	2
36	3-3287	Spacer	2
37	5-2490	Screw	2
38	5-0655	Plug, Washout	1
39	3-5956	Washer, Pivot	4
40	5-2046	Pad	1
41	3-0655	Screw, Pivot	4
42	5-0657	Knob	2
43	5-0660	Tire, Front	2
44	5-1984	Arm, Pivot	1
45	3257-3	Key	1
46	3-5246	Screw, Special	1
47	3253-22	Lockwasher	1
48	3-6292	Cup, Anti-Scalp	1
49	5-1611	Blade	1
50	3-9810	Retainer, W.A.	1
51	32140-48	Screw, Self Tapping	3
52	32146-5	Nut	2
53	3290-133	Screw	1
54	5-3326	Housing	1
55	5-1986	Arm, Pivot	1
56	5-3311	Deflector	1
57	5-3442	Attachment, Bag	1
58	2-9319	Assembly, Muffler	1
59	32103-14	Nut, Wing	1
60	3290-199	Nut, Speed	1
61	5-1426	Decal, A.S.A.	1
62	3-2644	Pin, Hinge	1
63	3-7643	Decal, Warning	1
64	3-2635	Arm, Pivot	1
65	221-286	Engine, Recoil	1
66	5-3340	Assembly, Recoil Bracket	1
67	32149-2	Nut	1

SPECIFICATIONS

ENGINE: 19" - Toro (Fingertip Start) LAV30-30360G.
ENGINE SHROUD: Rigid Polyethylene.
FUEL TANK CAPACITY: 1 quart.
CUTTER BLADE: 19" long, S-shaped, hardened.
WHEELS: #18 ga. Polyethylene with oil impregnated powered metal bushings.
TIRES:
Front - Semi-pneumatic 6-3/4 x 1.75 Toro tread
Rear - Semi-pneumatic 8 x 1.75 Toro tread
HEIGHT OF CUT: 1/2" to 3" by moving wheels, with hand operated levers.
WIDTH OF CUT: 19".
HOUSING: Die cast magnesium alloy, spiral grass chamber, right hand discharge. Symmetrical wheel locations. Hinged chute deflector.
HANDLE: 3/4" O.D. x #16 ga. welded steel tubing in separable halves. No tool, positive handle height adjustment.
THROTTLE CONTROL: Control wire and casing. Operating lever mounted to excutcheon plate on upper handle. Stop, run, and start positions.
DIMENSIONS:
Width - 22-1/2"
Length - 29" w/o handle, wheels at 1" cut
Height - 11-3/8"
WEIGHT: 51 pounds.
STANDARD EQUIPMENT:
Grass bag assembly, bagging chute, bag hanger, anti-scalp dish, washout plug, "Auto-oiler" † visual oil filler.

† Exclusive mark of Toro Manufacturing Corporation.

CARBURETOR ADJUSTMENTS

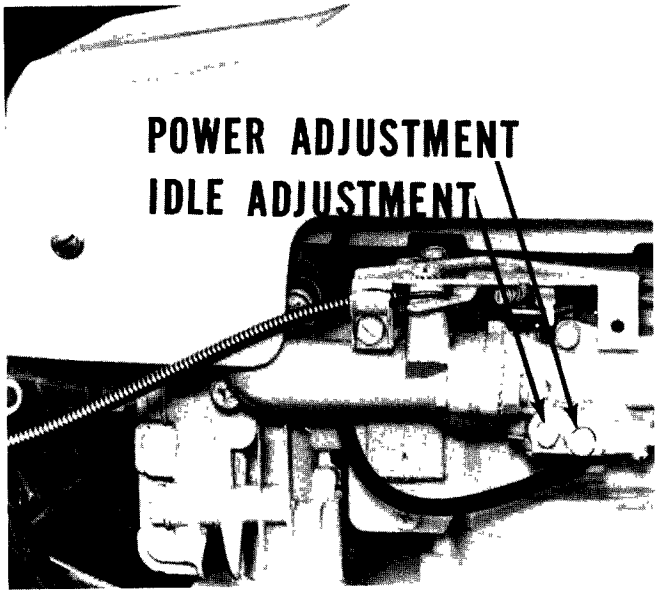

Do not make unnecessary adjustments. Factory settings are correct for most applications. If adjustments are needed, proceed as follows:

1. Close power adjusting needle (photo above) by turning to right (clockwise). Close finger tight only. Forcing will cause damage.
2. Open one turn (counterclockwise).
3. Close idle adjusting needle (photo above) by turning to right (clockwise). Close finger tight only. Forcing will cause damage.
4. Open one turn (counterclockwise) for diaphragm carburetor.
5. Start engine. Follow starting instructions. (See Owner's Manual.)
6. With throttle open (carburetor control at "RUN" or "FAST" position), adjust power adjusting needle one-eighth (1/8) turn at a time, forward or backward until engine runs smoothly. If engine tends to stall under load, enrich mixture slightly (counterclockwise).
7. Hold throttle lever closed or move carburetor control to "IDLE" or "SLOW" position and adjust idle adjusting needle until engine runs smoothly, proceeding as in step 6 above.
8. Allow several seconds between each adjustment when performing either step 6 or 7 to allow engine to react to new setting.
9. Maximum engine speeds are preset at factory and should not be changed except by a qualified Service Station repairman who has the necessary equipment.

STORAGE INSTRUCTIONS

In event engine is to be stored for any length of time (30 days or more) or at the end of mowing season, prepare as follows:

1. Drain by tipping or by syphon hose, then run engine until remainder is used and tank and carburetor are empty.
   CAUTION: Drain into container outdoors away from fire or flame.
2. Drain carburetor.
   Diaphragm carburetors are drained by starting engine after fuel tank is drained and engine is allowed to run until it stops. This will use up fuel in carburetor.
3. Inside protection of engine for storage is performed by removing spark plug and pouring one ounce of S.A.E. 30 oil through spark plug hole into cylinder. Crank engine without starting several times to spread oil over cylinder walls.

ENGINE Model No. LAV30-30360G

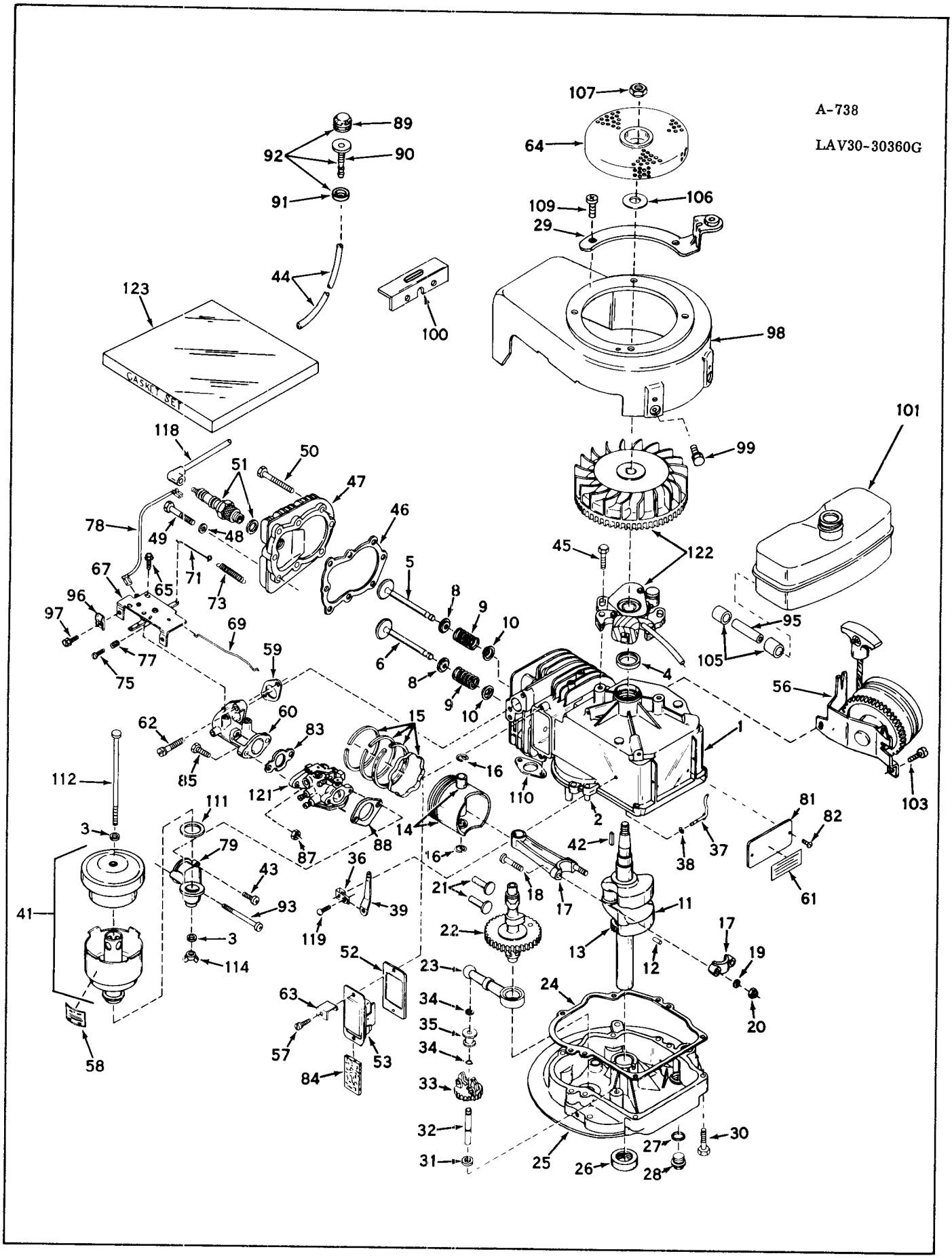

ENGINE PARTS LIST

Ref. No.	Part No.	Description	No. Used
1	32617	Cylinder Assy. (Incl. Nos. 2 & 4)	1
2	26727	Pin, Dowel	2
3	27183	Washer, Fiber	2
4	*29183	Seal, Oil	1
5	29314A	Valve, Intake (Standard) (Incl. Nos. 8, 9 & 10)	1
5	29316A	Valve, Intake (1/32" Overs.) (Incl. Nos. 8, 9 & 10)	1
6	29313A	Valve, Exhaust (Standard) (Incl. Nos. 8, 9 & 10)	1
6	29315A	Valve, Exhaust (1/32" Overs.) (Incl. Nos. 8, 9 & 10)	1
8	31671	Cap, Upper Valve Spring	2
9	31672	Spring, Valve	2
10	31673	Cap, Lower Valve Spring	2
11	30961	Crankshaft Assy. (Incl. Nos. 12 & 13)	1
12	29783	Pin, Crankshaft Gear	1
13	27613	Gear, Crankshaft	1
14	31304	Piston & Pin Assy. (Stnd) (Incl. 2 of No. 16)	1
14	31305	Piston & Pin Assy. (.010 Oversize) (Incl. 2 of No. 16)	1
14	31306	Pistong & Pin Assy. (.020 Oversize) (Incl. 2 of No. 16)	1
15	27565	Ring Set, Piston (Standard)	1
15	27566	Ring Set, Piston (.010 Overs.)	1
15	27567	Ring Set, Piston (.020 Overs.)	1
16	20381	Ring, Piston Pin Retaining	2
17	30963A	Rod Assy., Connecting (Incl. Nos. 18, 19 & 20)	1
18	26706	Bolt, Connecting Rod	2
19	20747	Washer, Connecting Rod	2
20	27573	Nut, Lock	2
21	27241	Lifter, Valve	2
22	31316	Camshaft	1
23	29914	Pump Assy., Oil	1
24	*26750A	Gasket, Mounting Flange	1
25	31907	Flange Assy., Mounting (Incl. Nos. 26, 27, 28 & 32)	1
26	*26208	Seal, Oil	1
27	*28833	Gasket, Drain Plug	1
28	27244	Plug, Oil Drain	1
29	**	Bracket Assy., Starter	1
30	650488	Screw, Hex Hd. Cap Sems	6
31	30590A	Washer, Flat	1
32	30574	Shaft, Mechanical Governor	1
33	30591	Gear Assy., Governor	1
34	29193	Ring, Retaining	2
35	30588A	Spool, Governor	1
36	31335	Clamp, Governor Lever	1
37	30589	Rod, Governor (Incl. No. 38)	1
38	28277	Washer, Flat	1
39	31383	Lever, Governor	1
41	31404	Cleaner Assy., Air	1
42	27247	Key, Flywheel	1
43	28597	Screw, Fil. Hd. Sems	1
44	32180	Line, Primer	1
45	650489	Screw, Hex Hd. Cap Sems	2
46	*29953B	Gasket, Cylinder head	1
47	30579	Head, Cylinder	1
48	26073	Washer, 5/16"	5
49	6021	Screw, Hex Hd. Cap	5
50	6023	Screw, Hex Hd. Cap	3
51	21943	Plug, Spark (Champion J-8 or equivalent)	1
52	*31619	Gasket, Breather	1
53	31337	Breather Assy. (Incl. Nos. 52 & 84)	1
56	590450	Starter, Side Mount Rewind	1
57	650128	Screw, Phil. Fil. Hd. Sems	2
58	30002	Decal, Air Cleaner	1
59	*30188	Gasket, Intake Pipe	1
60	31384	Pipe, Intake	1
61	31865	Decal, Name & Instruction	1
62	650176	Screw, Phil. Fil. Hd. Sems	2
63	30593	Clip, Magneto Wire	1
64	32237	Screen, Flywheel	1
65	30200	Screw, Hex. Sltd. Hd. Sems Self Tapping	2
67	32181	Control Assy., Speed	1
69	31385A	Link, Throttle to Governor	1
71	31387A	Link, Governor Spring	1
73	31386	Spring, Governor	1
75	650549	Screw, Fil. Slotted Hd. Mach.	1
77	31342	Spring, Compression	1
78	31388	Wire, Ground	1
79	31473	Elbow, Air Cleaner	1
81	31345	Plate, Identification	1
82	28670	Screw, Drive	2
83	31688	Gasket, Carburetor	1
84	31410	Element, Breather	1
85	6202	Screw, Hex Hd. Cap	2
87	29752	Nut, Hex Jam	2
88	*27272	Gasket, Cleaner Bracket	1
89	32183	Bulb, Primer	1
90	32184	Body, Primer	1
91	32312	Retainer, Primer Bulb	1
92	32182	Primer Assy. (Incl. Nos. 89, 90 & 91)	1
93	650519	Screw, Fil. Hd. Mach.	1
95	31400	Line, Fuel	1
96	27793	Clip, Conduit	1
97	28942	Screw, Slotted Hex Hd. Sems	1
98	32369	Housing, Blower	1
99	650561	Screw, Hex Hd. Cap Sems	2
100	**	Bracket, Shroud	1
101	32170	Tank, Fuel	1
103	650191	Screw, Fil. Hd. Sems	3
105	29774	Line, Fuel	2
106	650490	Washer, Belleville	1
107	650607	Nut, Flywheel	1
109	29716	Screw, Phil. Fil. Hd. Mach.	2
110	*30081	Gasket, Muffler	1
111	*27165	Gasket, Air Cleaner to Elbow	1
112	650622	Bolt, Air Cleaner	1
114	9577	Nut, Wing	1
118	610118	Cover, Spark Plug	1
119	650548	Screw, Hex Sltd. Washer Hd.	1
121	631243	Carburetor	1
122	610716	Magneto, Tecumseh	1
123	31409B	Gasket Set (Incl. items marked *)	1

** Order from your Toro Dealer

MAGNETO No. 610716

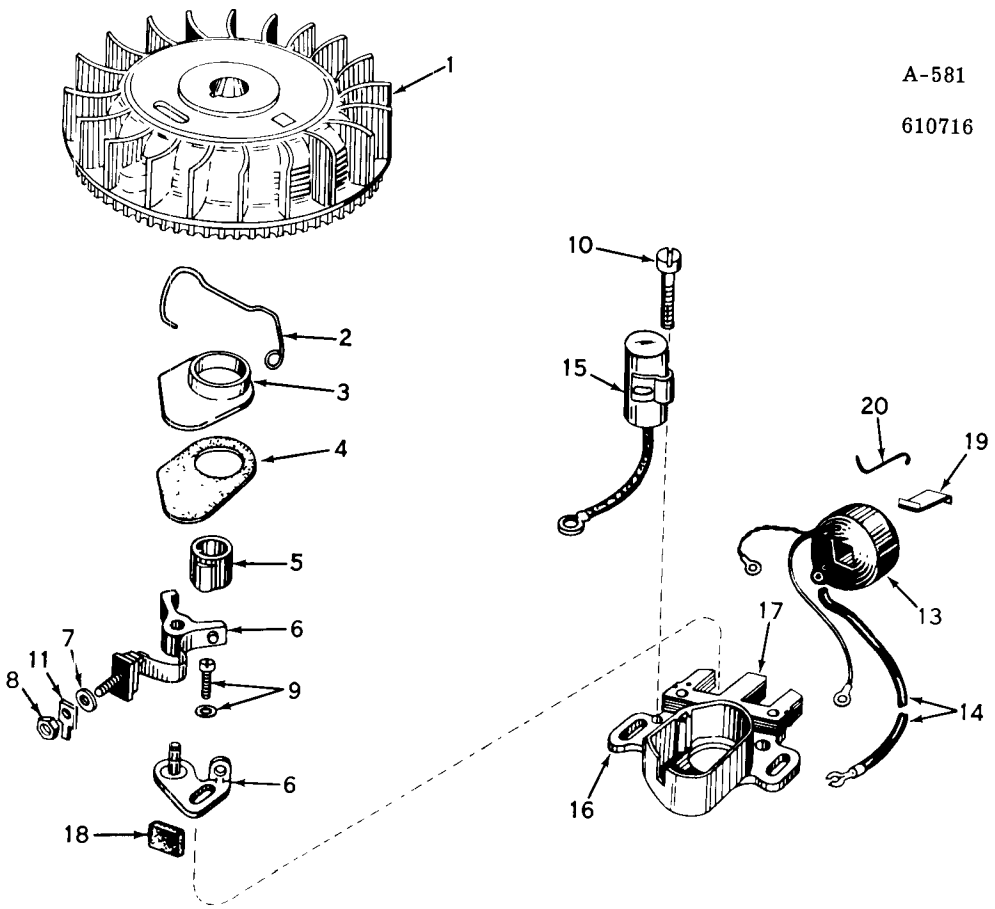

Ref. No.	Part No.	Description	No. Used
1	32159	Flywheel	1
2	30551	Spring, Breaker Box Dust Cover	1
3	30550	Cover, Breaker Box Dust	1
4	32052	Gasket, Dust Cover	1
5	30552	Cam, Breaker	1
6	30547A	Breaker Assembly	1
7	610385	Washer, Terminal	1
8	610408	Nut, Terminal	1
9	29181	Screw and Washer Assy., Breaker	1
10	610593	Screw, Condenser Fastening	1

Ref. No.	Part No.	Description	No. Used
11	30843	Tab, Ground Terminal	1
13	30560	Coil Assy. (Incl. Ref. Nos. 14, 15 & 19)	1
14	30554	Wire, Ignition Lead	1
15	30548A	Condenser	1
16	30545	Core and Plate Group	1
17	30561A	Stator Assy. (Incl. Nos. 2, 3 5 thru 14 & 16 thru 19)	1
18	30549	Felt, Cam Wiper	1
19	29629	Spring, Coil Wedge	1
20	31311	Clip, Coil Locking	1

CARBURETOR No. 631243

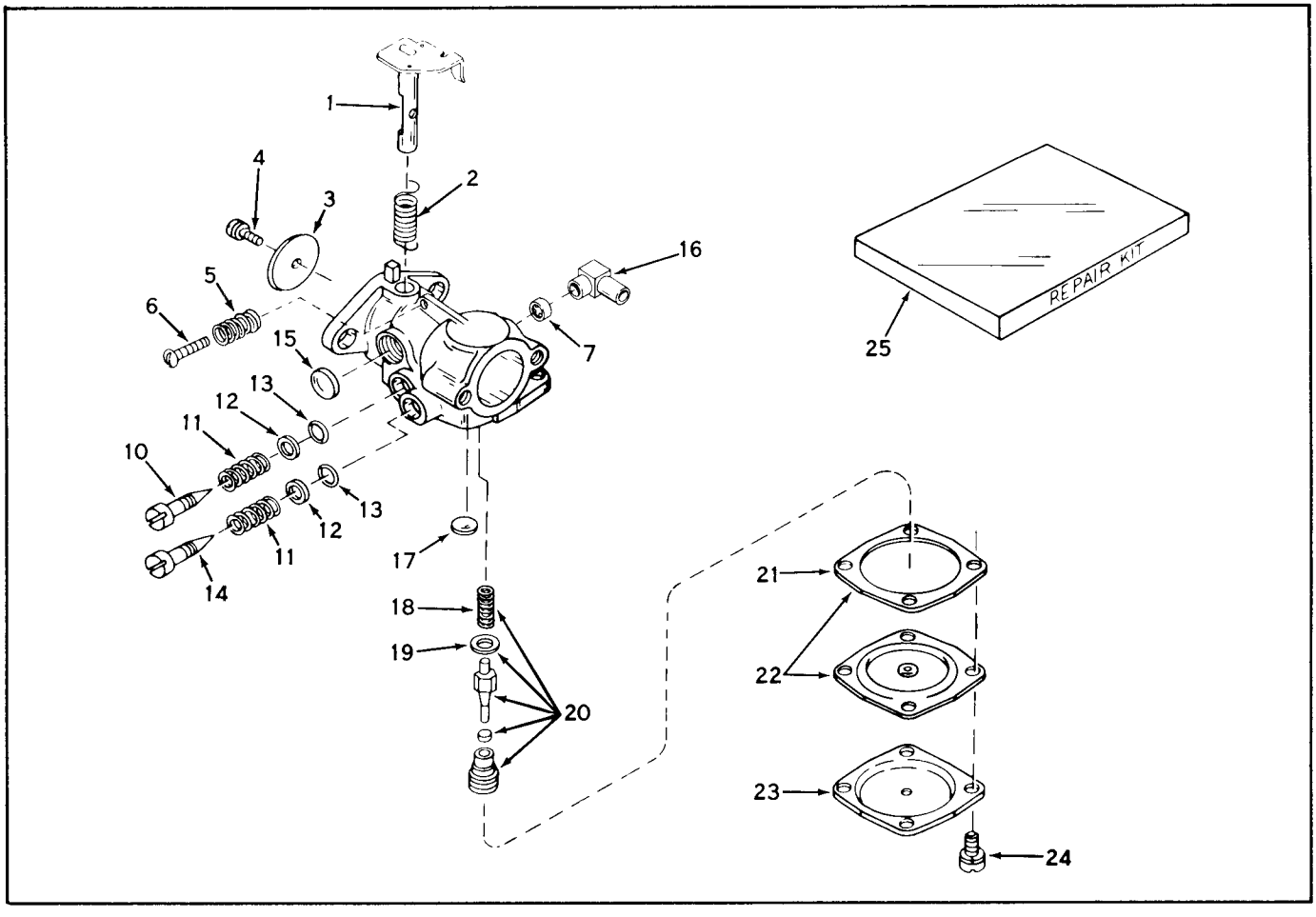

Ref. No.	Part No.	Description	No. Used
1	630983	Shaft & Lever Assy.	1
2	631279	Spring, Throttle Return	1
3	630733	Shutter, Throttle	1
4	650506	Screw, Throttle Shutter	1
5	630766	Spring, Idle Regulating Screw	1
6	650417	Screw, Idle Regulating	1
7	631201	Valve, Check	1
10	630767	Screw, Idle Adjustment	1
11	630738	Spring, Adjustment Screw	2
12	630739	Washer, Adjustment Screw	2
13	*630740	"O" Ring, Adjustment Screw	2
14	630737	Screw, Main Adjustment	1

Ref. No.	Part No.	Description	No. Used
15	*630748	Plug, Welch	1
16	32267	Nipple, Fuel Inlet	1
17	*630746	Plug, Welch	1
18	630741	Spring, Needle Valve	1
19	630742	Gasket, Needle Valve Seat	1
20	*630932	Needle, Valve, Seat & Gasket	1
21	630750	Gasket, Diaphragm	1
22	*630978	Diaphragm Ass. (Incl. No. 21)	1
23	32185	Cover Assy., Diaphragm	1
24	650545	Screw, Diaphragm Cover	4
25	630974	Repair Kit (Incl. items marked *)	

REWIND STARTER No. 590450

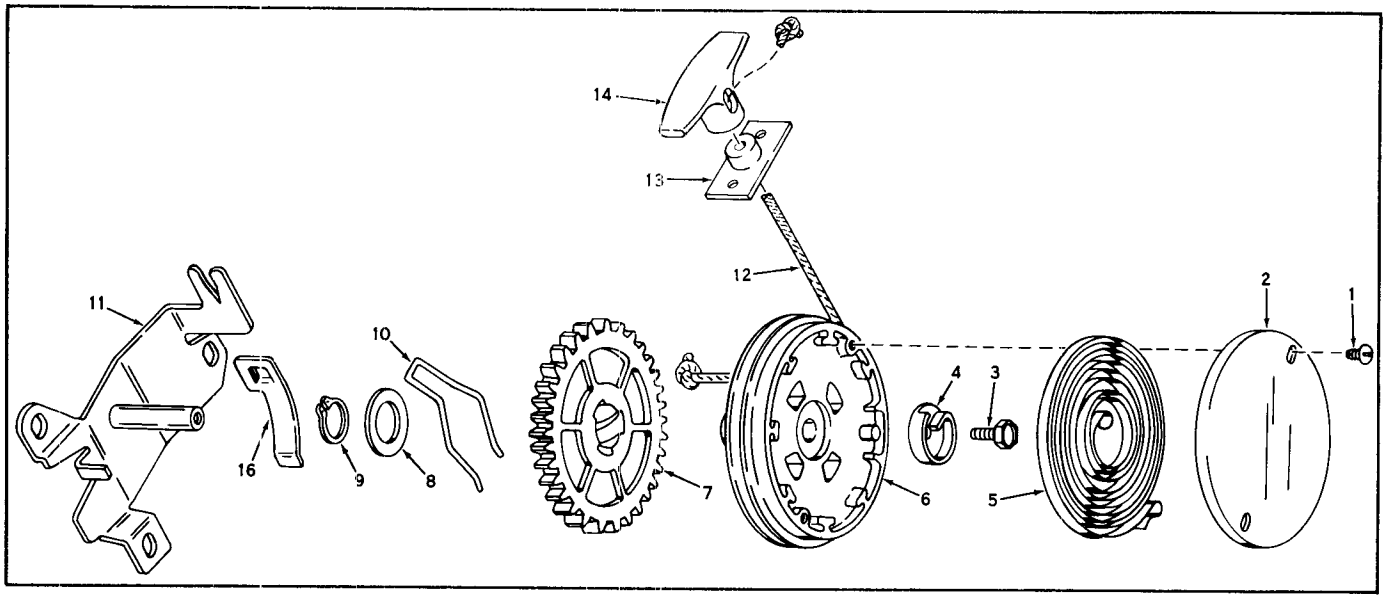

Ref. No.	Part No.	Description	No. Used
1	590430	Screw, Cover	2
2	590431	Cover, Spring	1
3	29728	Screw, Hub	1
4	590432	Hub, Spring	1
5	590433	Spring, Rewind	1
6	590434	Pulley	1
7	590435	Gear	1
8	590436	Washer	1
9	590437	Ring, Snap	1

Ref. No.	Part No.	Description	No. Used
10	590438	Brake	1
11	590439	Bracket Assy., Mounting	1
12	590451	Rope, Starter (61" long & 5/32" Diameter)	1
13	590441	Bracket Assy. (Can be removed if not required)	1
14	590452	Handle, Starter	1
16	590446	Clip, Rope	1

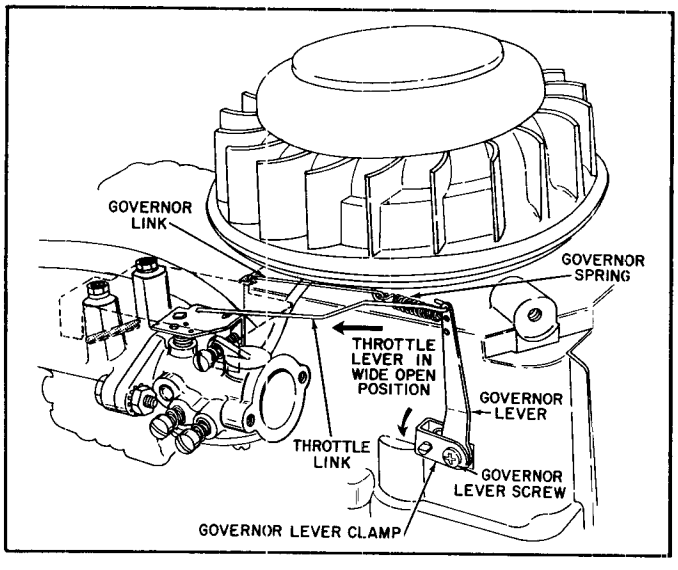

MECHANICAL GOVERNOR ADJUSTMENTS

1. Loosen governor lever screw.
2. Hold throttle lever in wide open position.
3. Rotate governor lever clamp as far as possible in direction shown by arrow.
4. Tighten governor lever screw.

PRODUCT CHANGES

In an effort to make improvements available to Toro owners as quickly as possible, minor changes are incorporated into Toro's products from time to time that do not become immediately shown in the Reference Drawing and Parts List. If such a change apparently has been made in your unit, which is not reflected in your manual, see your Toro distributor or his authorized Toro service dealer for information and parts numbers.

FORM NO. 1199

LITHO IN U.S.A.