Form No. 3430-890 Rev A

TX Platform

For TX Compact Tool Carrier

Model No. 22475—Serial No. 404800000 and Up

Model No. 22476—Serial No. 404800000 and Up

Installation Instructions

⚠ WARNING

CALIFORNIA
Proposition 65 Warning

Use of this product may cause exposure to chemicals known to the State of California to cause cancer, birth defects, or other reproductive harm.

Safety

- Ensure that the platform is properly attached to the machine and is in good working order prior to use.
- **Operate the machine up and down slopes with the heavy end of the machine uphill.** Weight distribution changes with attachments. An empty bucket makes the rear of the machine the heavy end, and a full bucket makes the front of the machine the heavy end. Most other attachments make the front of machine the heavy end.
- Lower the loader arms before stepping off the platform.
- Do not try to stabilize the machine by putting your foot on the ground. If you lose control of the machine, step off the platform and away from the machine.
- Do not place your feet under the platform.
- Do not move the machine unless you are standing with both feet on the platform and your hands are holding onto the reference bars.
- Allow only the machine operator on the platform.
- Do not allow use of the platform by untrained operators.
- Look behind and down before backing up to ensure that the path is clear.
- Dismount and latch the platform in the transport position when loading and unloading the machine.
- Slow down before turning. Sharp turns on any terrain may cause loss of control.
- Do not use the platform on rough and uneven terrain.
- Ensure that you operate the platform in areas where there are no obstacles in close proximity to the operator. Failure to maintain adequate distance from trees, walls, and other barriers may result in injury as the platform backs up or turns during operation if the operator is not attentive to the surroundings. Only operate the unit in areas where there is sufficient clearance for the operator to safely maneuver the platform.
- Do not exceed the rated operating capacity, as the traction unit with the platform may become unstable, which may result in loss of control.
- Before performing any service, repairs, maintenance, or adjustments, do the following:
  - Park the machine on a level surface.
  - Lower the loader arms and disengage the auxiliary hydraulics.
  - Engage the parking brake (if equipped).
  - Shut off the engine and remove the key.
- Keep nuts and bolts tight. Keep equipment clean and in good condition.
- Use only genuine replacement parts to ensure that original standards are maintained.
- Do not modify the platform or use it on non-approved machines.

© 2019—The Toro® Company
8111 Lyndale Avenue South
Bloomington, MN 55420

Register at www.Toro.com.

Original Instructions (EN)
Printed in the USA
All Rights Reserved

3430-890 A

Safety and Instructional Decals

Safety decals and instructions are easily visible to the operator and are located near any area of potential danger. Replace any decal that is damaged or missing.



decal58-6520

58-6520

1. Grease

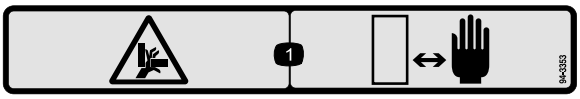

decal94-3353

94-3353

1. Crushing hazard of hand—keep hands away.



decal133-8061

133-8061



decal138-4344

138-4344

1. Read the *Operator's Manual*.
2. Platform locked in the storage position.
3. Lift the platform up to unlock.
4. Lower the platform from the unlocked position to use.
5. Tipping hazard—do not step off the platform with a raised load; lower the attachment, then step off the platform.

Installation

Loose Parts

Use the chart below to verify that all parts have been shipped.

Procedure	Description	Qty.	Use
1	No parts required	–	Prepare the machine.
2	Platform assembly Bolt (1/2 x 1-1/2 inches) Nut (1/2 inch)	1 4 4	Install the platform.
3	Counterweight Bolt (1/2 x 1-1/4 inches) Washer	1 4 4	Install the counterweight (TX 500 Series machines only).
4	Decal	1	Install the decal.
5	Reference bar Bolt (5/16 x 3/4 inch)	1 2	Install the reference bar.

1

Preparing the Machine

No Parts Required

Procedure

1. Park the machine on a level surface.
2. Lower the loader arms.
3. Engage the parking brake.
4. Shut off the engine and remove the key.
5. Wash all dirt and debris from the machine.
6. For TX 400 series machines, remove the counterweights and their fasteners from the rear of the machine and store them in a safe location (Figure 1).

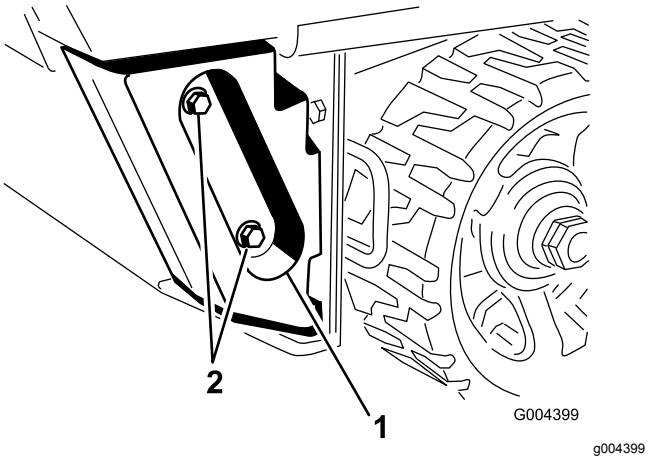

Figure 1

1. Counterweight
2. Fasteners

2

Installing the Platform

Parts needed for this procedure:

1	Platform assembly
4	Bolt (1/2 x 1-1/2 inches)
4	Nut (1/2 inch)

Procedure

1. Check and tighten the bottom 2 bolts securing the lower rear panel to the frame (Figure 2).

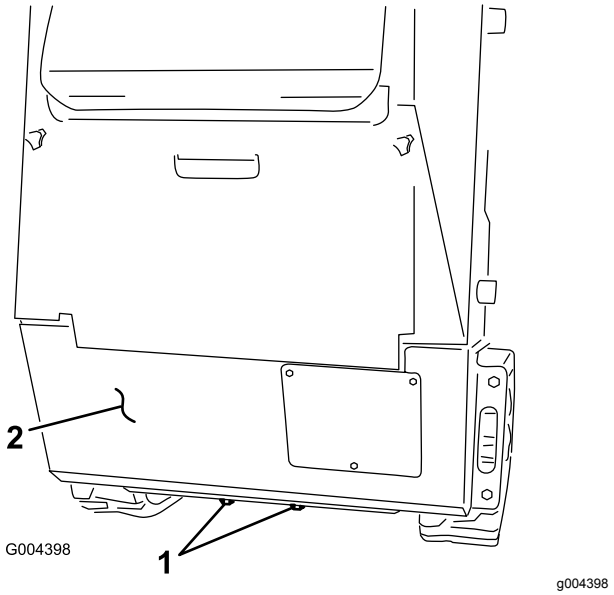

Figure 2

TX 525 shown

1. Bolts
2. Rear panel

2. One at a time, replace the 4 bolts and nuts securing the sides of the lower rear panel to the frame with 4 new bolts (1/2 x 1-1/2 inches) as shown in Figure 3.

   Note: Install each bolt from the front to hold the rear panel in position as pressure is released. Do not install the nuts at this time.

   Important: **Do not remove the rear panel.**

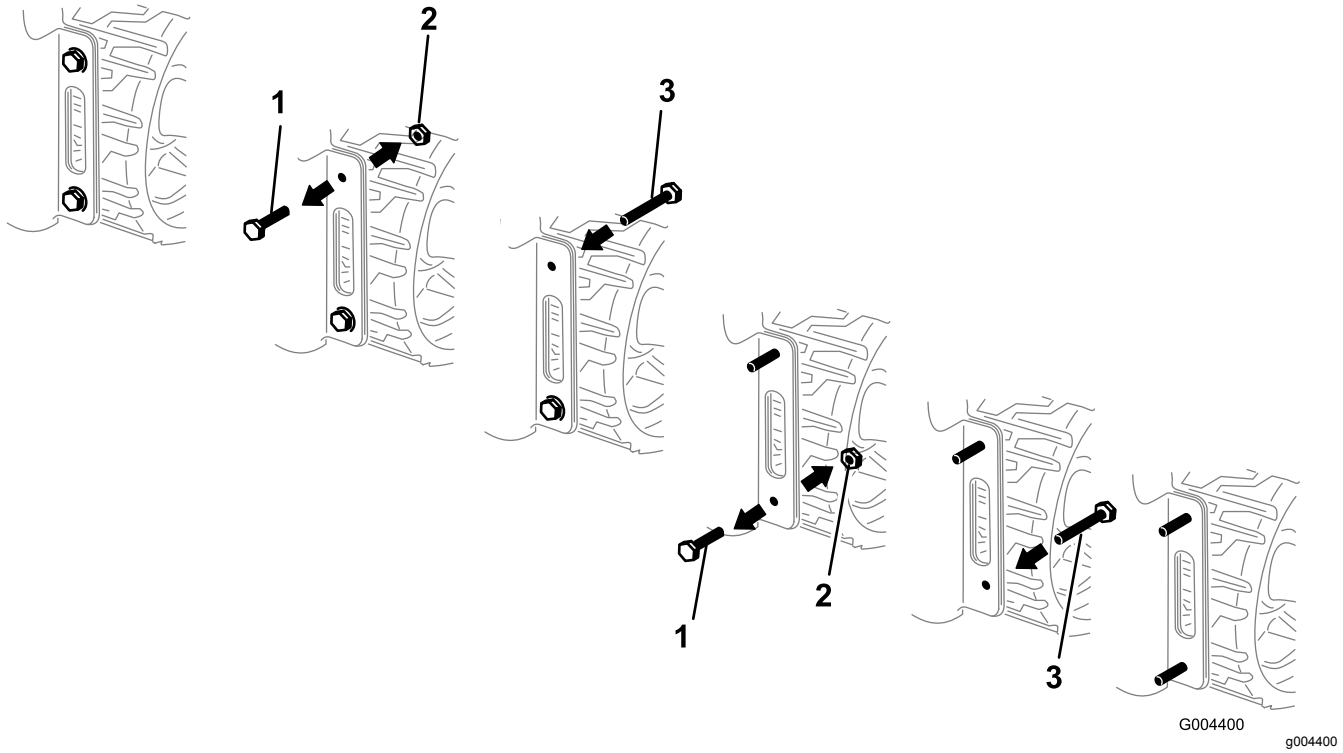

Figure 3
Right side of TX 525 shown

1. Existing bolt
2. Nut
3. Bolt (1/2 x 1-1/2 inches)

3. Pull up on the platform handle to extend the platform (Figure 4).

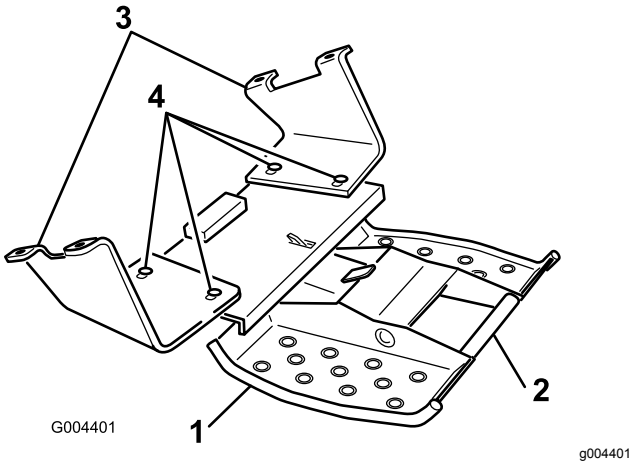

Figure 4

1. Platform assembly
2. Handle
3. Mounting bracket
4. Loosen these bolts.

4. By hand, loosen, but do not remove, the 4 bolts and nuts securing the platform assembly to the mounting brackets (Figure 4).
5. Install the mounting brackets onto the 4 bolts you inserted into the rear panel previously and secure them with 4 nuts (1/2 inch) as shown in Figure 5.

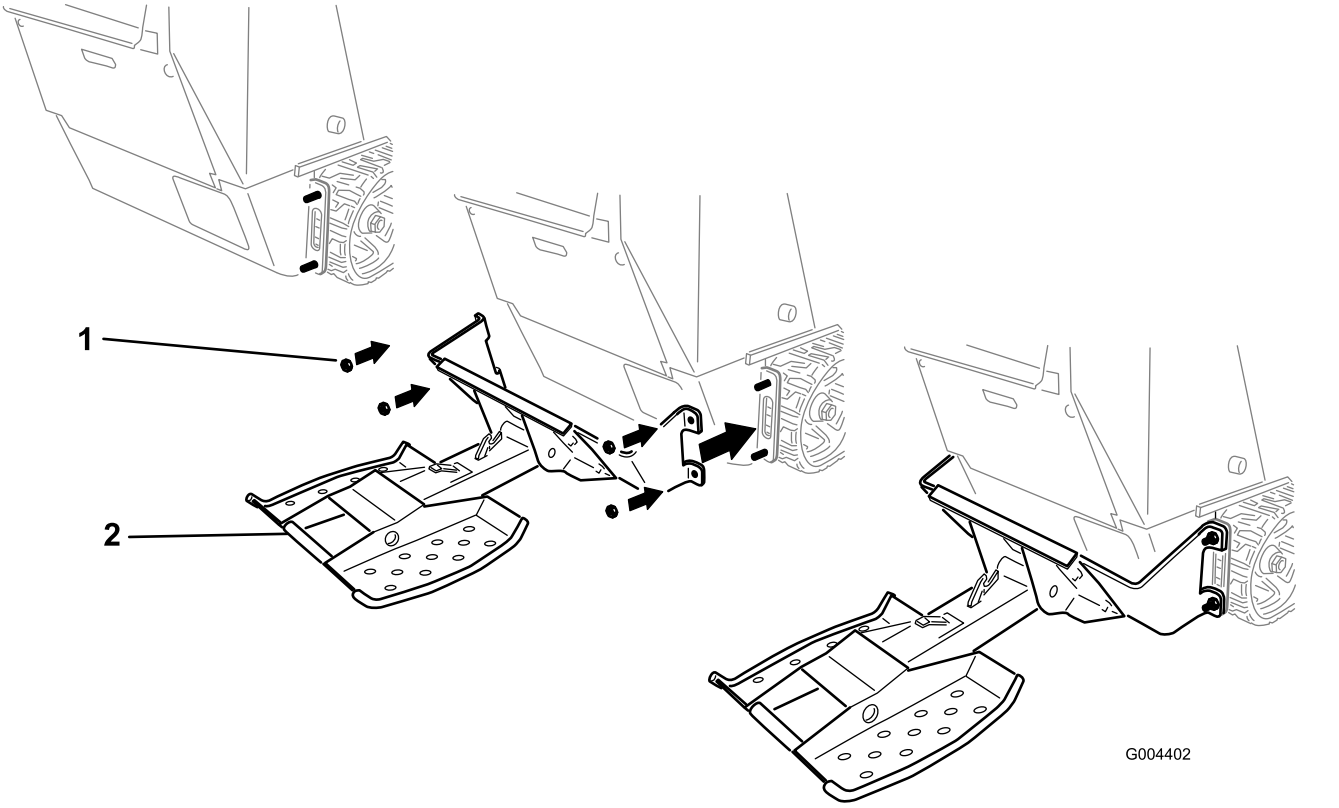

Figure 5

1. Nut (1/2 inch)
2. Platform

6. Torque the nuts securing the platform and rear panel to the machine to 91 to 113 N·m (67 to 83 ft-lb).
7. Align the platform so that it is centered on the machine, then torque the fasteners securing the platform assembly to the mounting brackets to 91 to 113 N·m (67 to 83 ft-lb).

3

Installing the Counterweight

TX 500 Series Machines Only

Parts needed for this procedure:

1	Counterweight
4	Bolt (1/2 x 1-1/4 inches)
4	Washer

Procedure

1. Apply thread-locking compound to the 4 bolts (1/2 x 1-1/4 inches), and use them and 4 washers to install the counterweight to the front of the machine (Figure 6).
2. Torque the bolts to 73 to 89 N·m (54 to 66 ft-lb).

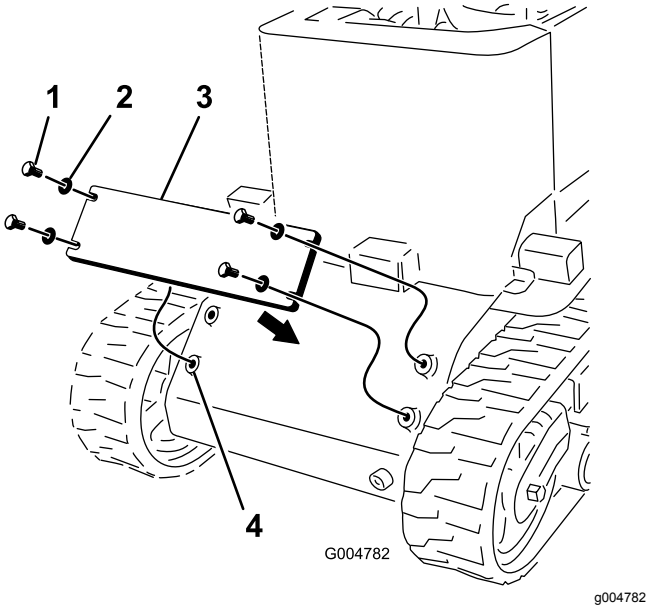

Figure 6

1. Bolt (1/2 x 1-1/4 inches)
2. Washer
3. Counterweight
4. Mounting holes

4

Installing the Decal

Parts needed for this procedure:

1	Decal

Procedure

1. Clean the area behind the traction control so that there is not dirt or grease on it (Figure 7).

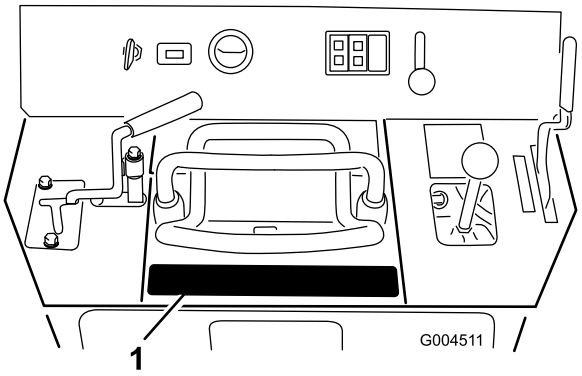

Figure 7

1. Decal location

2. Remove the backing from the decal and install it in the decal location shown in Figure 7.

   Note: To prevent bubbles under the decal, press it down in the center first, then rub it outward toward the edges.

5

Installing the Reference Bar

Parts needed for this procedure:

1	Reference bar
2	Bolt (5/16 x 3/4 inch)

Procedure

1. Remove the rear access cover; refer to the *Operator's Manual* for the machine.
2. Locate and drill 2 holes (3/8 inch) on the control panel below the loader-arm lever (Figure 8).

   Note: If the holes already exist, skip this step.

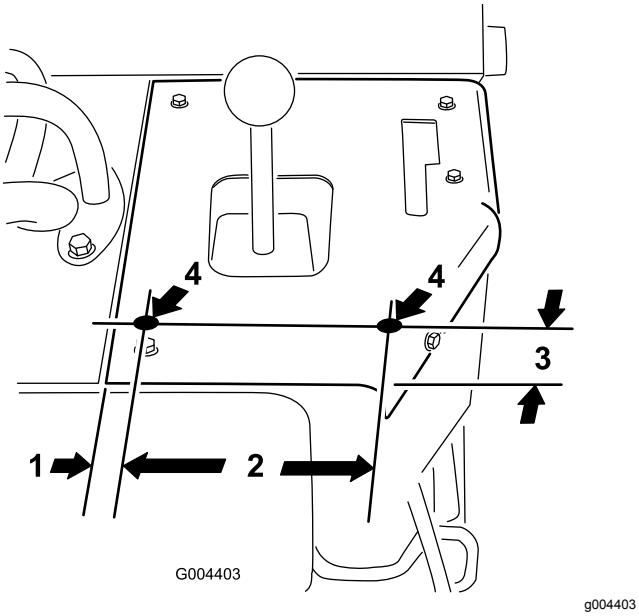

Figure 8

1. 55/64 inch
2. 5-3/4 inches
3. 2 inches
4. Drill holes (3/8 inch diameter) here.

3. Secure the reference bar to the control panel using 2 bolts (5/16 x 3/4 inch), installing them from inside the machine (Figure 9).

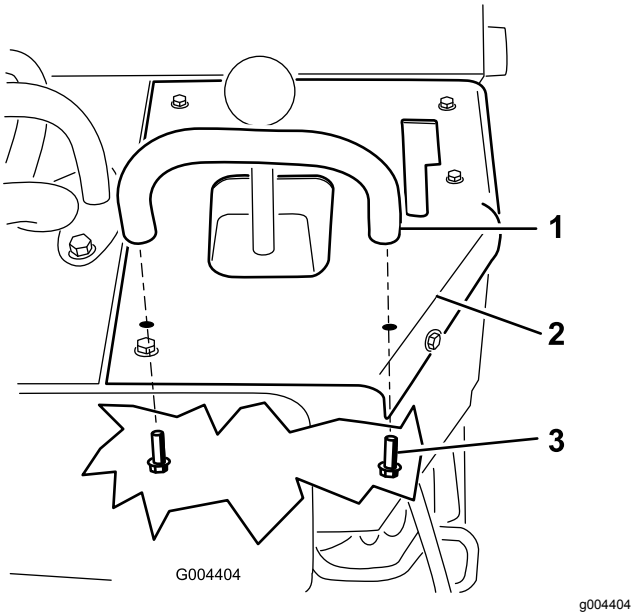

Figure 9

1. Reference bar
2. Control panel
3. Bolt (5/16 x 3/4 inch)

4. Install the rear access cover.

Operation

⚠ WARNING

If you step off the platform with the loader arms raised, the machine could tip forward quickly, injuring you or bystanders.

Do not step off the platform with the loader arms raised.

⚠ WARNING

Unless you are carrying heavy loads or attachments, the platform with an operator makes the rear of the machine the heavy end.

Always keep the heavy end of the machine uphill when operating on slopes.

⚠ WARNING

You could fall off the platform and be seriously injured during operation.

Do not move the controls unless you are standing with both feet on the platform and your hands are holding onto the reference bars.

Folding the Platform

Lift up on the back of the platform and swing it toward the machine (Figure 10). When the latch contacts the mounting plate, the platform will slide down into the tube and lock in place.

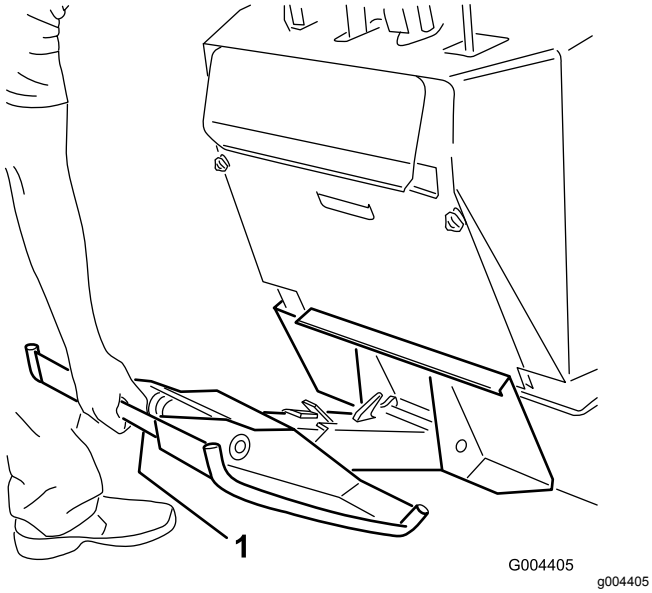

Figure 10

1. Platform handle

Unfolding the Platform

Pull up on the platform until the latch releases, then swing it out and down (Figure 11).

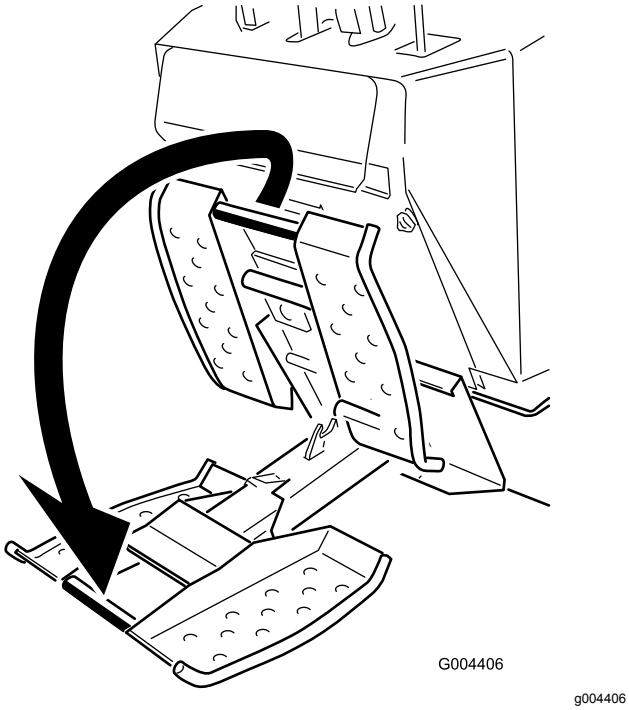

Figure 11

Using the Platform

Step onto the platform before starting the machine. Use the reference bars on the machine to stabilize yourself while riding on the platform.

Fully stop the machine and engage the parking brake before stepping off the platform.

Maintenance

Greasing the Platform

Service Interval: Before each use or daily (grease immediately after each washing).

Grease type: General-purpose grease

1. Park the machine on a level surface, engage the parking brake, and lower the loader arms.
2. Shut off the engine and remove the key.
3. Clean the grease fittings with a rag.
4. Connect a grease gun to each fitting (Figure 12).

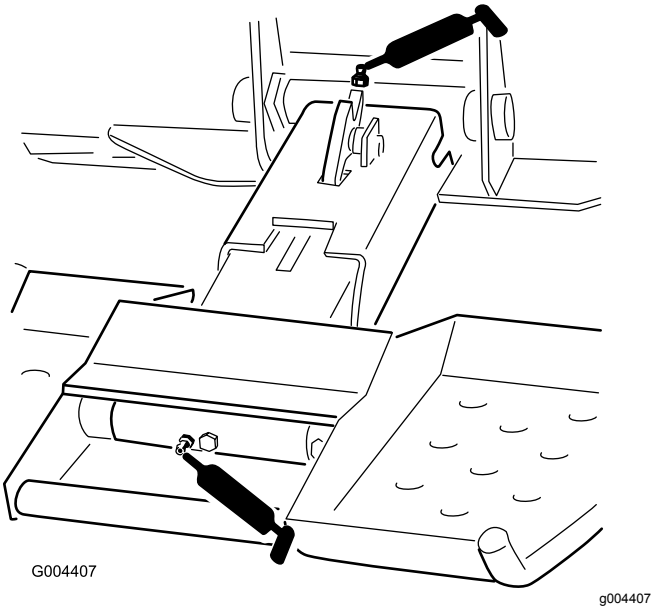

Figure 12

5. Pump grease into the fittings until grease begins to ooze out (approximately 3 pumps).
6. Wipe up any excess grease.

Checking the Shear Bolt

Service Interval: Before each use or daily

Check the shear bolt for wear, cracks, or damage (Figure 13). Replace it if it is damaged.

Important: **Use only a genuine Toro replacement shear bolt and nut. Other bolts may not function correctly and may lead to an unsafe condition.**

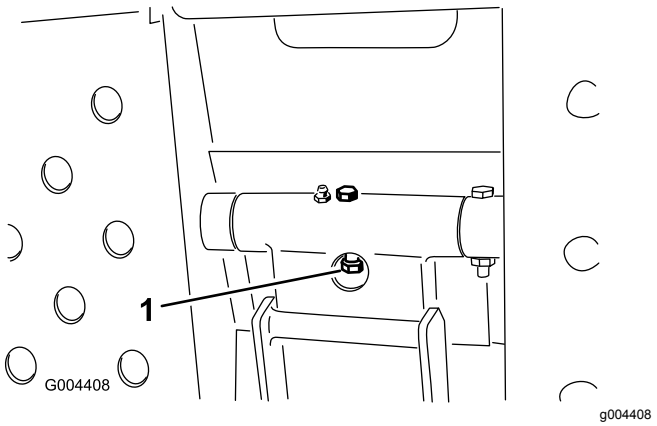

Figure 13

1. Shear bolt

Notes:

Notes:

California Proposition 65 Warning Information

What is this warning?

You may see a product for sale that has a warning label like the following:



WARNING: Cancer and Reproductive Harm—www.p65Warnings.ca.gov.

What is Prop 65?

Prop 65 applies to any company operating in California, selling products in California, or manufacturing products that may be sold in or brought into California. It mandates that the Governor of California maintain and publish a list of chemicals known to cause cancer, birth defects, and/or other reproductive harm. The list, which is updated annually, includes hundreds of chemicals found in many everyday items. The purpose of Prop 65 is to inform the public about exposure to these chemicals.

Prop 65 does not ban the sale of products containing these chemicals but instead requires warnings on any product, product packaging, or literature with the product. Moreover, a Prop 65 warning does not mean that a product is in violation of any product safety standards or requirements. In fact, the California government has clarified that a Prop 65 warning "is not the same as a regulatory decision that a product is 'safe' or 'unsafe.'" Many of these chemicals have been used in everyday products for years without documented harm. For more information, go to https://oag.ca.gov/prop65/faqs-view-all.

A Prop 65 warning means that a company has either (1) evaluated the exposure and has concluded that it exceeds the "no significant risk level"; or (2) has chosen to provide a warning based on its understanding about the presence of a listed chemical without attempting to evaluate the exposure.

Does this law apply everywhere?

Prop 65 warnings are required under California law only. These warnings are seen throughout California in a wide range of settings, including but not limited to restaurants, grocery stores, hotels, schools, and hospitals, and on a wide variety of products. Additionally, some online and mail order retailers provide Prop 65 warnings on their websites or in catalogs.

How do the California warnings compare to federal limits?

Prop 65 standards are often more stringent than federal and international standards. There are various substances that require a Prop 65 warning at levels that are far lower than federal action limits. For example, the Prop 65 standard for warnings for lead is 0.5 µg/day, which is well below the federal and international standards.

Why don't all similar products carry the warning?

- Products sold in California require Prop 65 labelling while similar products sold elsewhere do not.
- A company involved in a Prop 65 lawsuit reaching a settlement may be required to use Prop 65 warnings for its products, but other companies making similar products may have no such requirement.
- The enforcement of Prop 65 is inconsistent.
- Companies may elect not to provide warnings because they conclude that they are not required to do so under Prop 65; a lack of warnings for a product does not mean that the product is free of listed chemicals at similar levels.

Why does Toro include this warning?

Toro has chosen to provide consumers with as much information as possible so that they can make informed decisions about the products they buy and use. Toro provides warnings in certain cases based on its knowledge of the presence of one or more listed chemicals without evaluating the level of exposure, as not all the listed chemicals provide exposure limit requirements. While the exposure from Toro products may be negligible or well within the "no significant risk" range, out of an abundance of caution, Toro has elected to provide the Prop 65 warnings. Moreover, if Toro does not provide these warnings, it could be sued by the State of California or by private parties seeking to enforce Prop 65 and subject to substantial penalties.