Form No. 3371-191 Rev C

TORO®

Count on it.

Parts Catalog

Z Master®

With 72in TURBO FORCE® Side Discharge Mower

Model No. 74274—Serial No. 312000001 and Up

Register at www.Toro.com.
Original Instructions (EN)

3371-191 C

Ordering Replacement Parts

To order replacement parts, please supply the part number, the quantity, and the description of each part desired.

Understanding Reference Numbers

Each identified part in an illustration has a reference number. The reference number for a part also appears in the parts list, along with other information about the part.

This catalog uses two special reference number formats, one to indicate parts in a service assembly and another to indicate the quantity of a given part in an illustration.

Service Assembly Reference Numbers

Parts in service assemblies have reference numbers in the form a:b. The a represents the reference number of the entire service assembly and the b represents a sequential number unique to each part within the service assembly.

For example, a wheel assembly might be identified by reference number 6, the tire by 6:1, the valve by 6:2, and the wheel by 6:3. When you order the assembly identified by reference number 6, you receive all parts identified by reference numbers 6:1,6:2, and 6:3. However, you may also order any part individually. Reference numbers of this type appear in illustration and in parts lists.

Reference Numbers Indicating Quantity

In an illustration, if a reference number indicates more than one part, the reference number has the form nX y. The n represents the quantity of the part, the X is the multiplication symbol, and the y represents the reference number.

For example, in an illustration, the reference number 2X 37 means that two of the parts identified by reference number 37 are indicated.

Contents

Front Frame Assembly . . . 4
Fork and Caster Wheel Assembly . . . 6
Traction Frame and Floor Pan Assembly . . . 7
Seat and Roll-Over Protection System Assembly . . . 8
Seat Assembly No. 116-0035 . . . 9
Roll-Over Protection System Assembly No. 117-3866 . . . 10
Main Frame and Rear Wheel Assembly . . . 11
Hydro Control Assembly . . . 13
Engine, Exhaust and Air Intake Assembly . . . 14
Air Cleaner Assembly No. 93-2190 . . . 15
Hydro and Gearbox Assembly . . . 16
Gearbox Assembly No. 107-9887 . . . 18
Hydraulic Tank, Pump and Motor Assembly . . . 19
Tandem Pump Assembly No. 107-9885 . . . 21
Hydraulic Motor Assembly No. 112-8357 (CCW) . . . 22
Hydraulic Motor Assembly No. 112-8358 (CW) . . . 23
Hydraulic Hose Assembly . . . 24
Fuel System and Throttle Control Assembly . . . 25
Fuel Line Assembly . . . 27
Engine Housing Assembly . . . 28
Cooling System Assembly . . . 29
Hood Assembly . . . 30
Deck Connection Assembly . . . 31
Deck Assembly . . . 32
Spindle Assembly No. 119-8500 . . . 34
Deck Decal Assembly No. 114-4483 . . . 35
Rubber Deflector Assembly No. 108-2792 . . . 36
Lever Assembly No. 107-1664 . . . 37
Electrical Assembly . . . 38
Crankcase Assembly . . . 40
Oil Pan Assembly . . . 41
Cylinder Head Assembly . . . 42
Gear Case and Oil Filter Cartridge Assembly . . . 43
Cylinder Head Cover Assembly . . . 44
Dipstick, Guide and Oil Pump Assembly . . . 45
Main Bearing Case Assembly . . . 46
Cam Shaft and Idle Gear Assembly . . . 47
Piston and Crankshaft Assembly . . . 48
Flywheel and Fuel Camshaft Assembly . . . 49
Idle Apparatus and Stop Solenoid Assembly . . . 50
Injection Pump and Governor Assembly . . . 51
Speed Control Plate Assembly . . . 52
Nozzle Holder and Glow Plug Assembly . . . 53
Nozzle Holder Assembly . . . 54
Alternator, Pulley and Fuel Pump Cover Assembly . . . 56
Alternator Components Assembly . . . 57
Starter Assembly . . . 58
Starter Components Assembly . . . 59
Water Flange and Thermostat Assembly . . . 60
Valve and Rocker Arm Assembly . . . 61
Inlet and Exhaust Manifold Assembly . . . 62
Upper and Lower Gasket Kits . . . 63
Attachments and Accessories . . . 64

© 2019—The Toro® Company

8111 Lyndale Avenue South
Bloomington, MN 55420

Contact us at www.Toro.com.
Printed in the USA.

All Rights Reserved

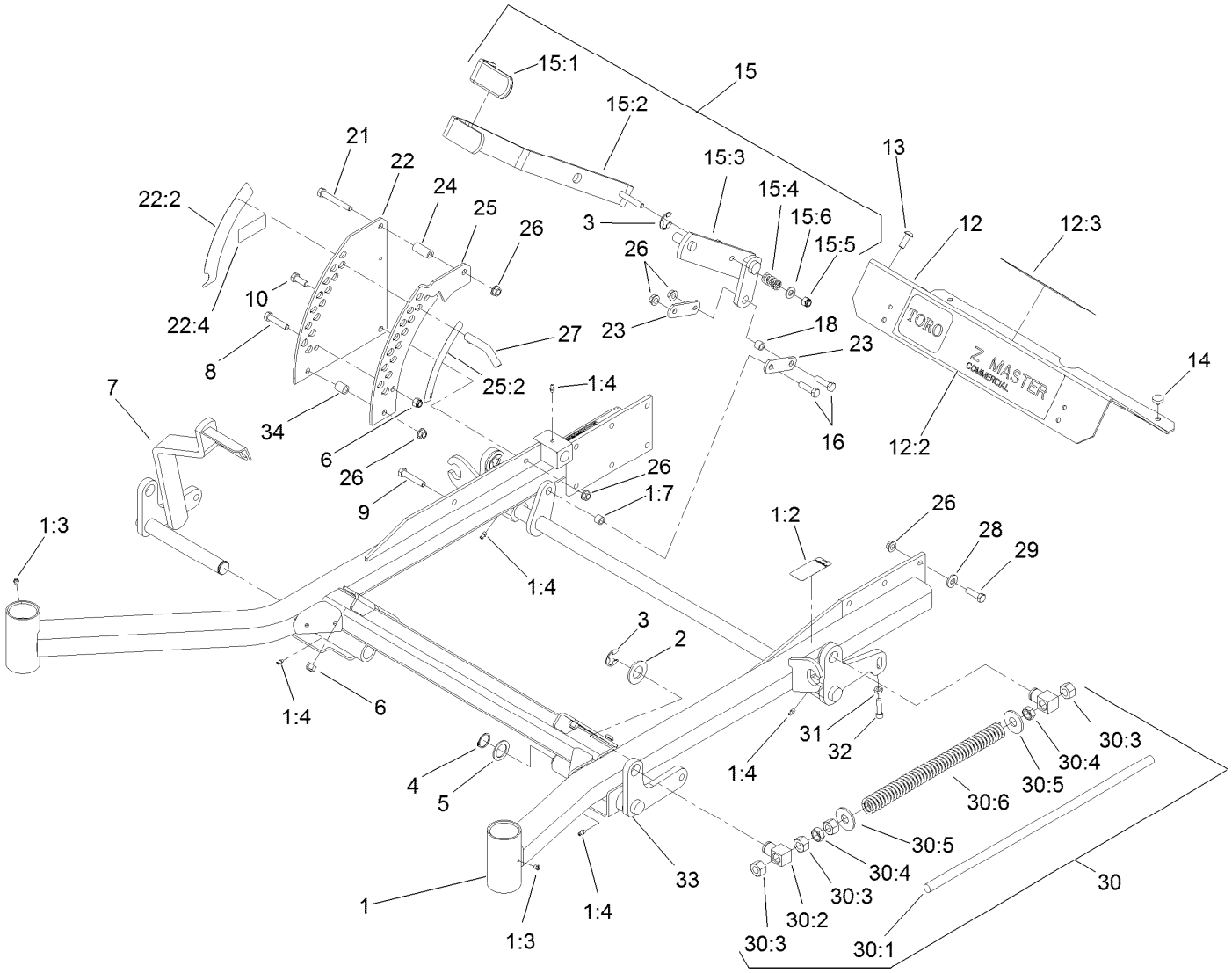

Front Frame Assembly

Ref.	Part Number	Qty.	Description
1	114-1248	1	Frame ASM
1:2	107-1857	1	Decal-Brake, Parking
1:3	1-811010	2	Plug
1:4	302-19	5	Fitting-Grease
1:7	103-1918	1	Bushing
2	3256-29	4	Washer-Flat
3	32151-103	5	Ring-Retaining, EXT
4	32151-29	2	Ring-Retaining
5	1-523157	2	Washer-Spacer
6	3296-39	5	Nut-Lock, NI
7	108-7786-01	1	Lift-Deck, RH Front
8	323-9	1	Screw-HH
9	323-10	1	Screw-HH
10	323-5	1	Screw-HH
12	106-9981	1	Footrest
12:2	121-7558	1	Decal
12:3	107-2112	1	Decal-Warning
13	3274-94	4	Screw-HSBH

Ref.	Part Number	Qty.	Description
14	1-513658	2	Bumper
15	110-5860	1	Deck Lift Handle ASM
15:1	1-633295	1	Grip-Lever, Lift
15:2	103-2083-03	1	Lever-Lift
15:3	103-2064-03	1	Arm-Lift, Deck
15:4	1-633325	1	Spring-Compression
15:5	3296-39	1	Nut-Lock, NI
15:6	3256-24	1	Washer-Flat
16	323-29	2	Screw-HH
18	103-1918	1	Bushing
21	323-11	1	Screw-HH
22	117-0366	1	Plate-HOC, Outer
22:2	107-1860	1	Decal-Height, Deck
22:4	117-2718	1	Decal-Arrester, Spark
23	1-633068	2	Arm-Lift, Deck
24	1-633082	1	Bushing-Lever, Lift
25	117-0369	1	Plate-HOC, Inner
25:2	107-1861	1	Decal-Height, Deck

● Not serviced separately

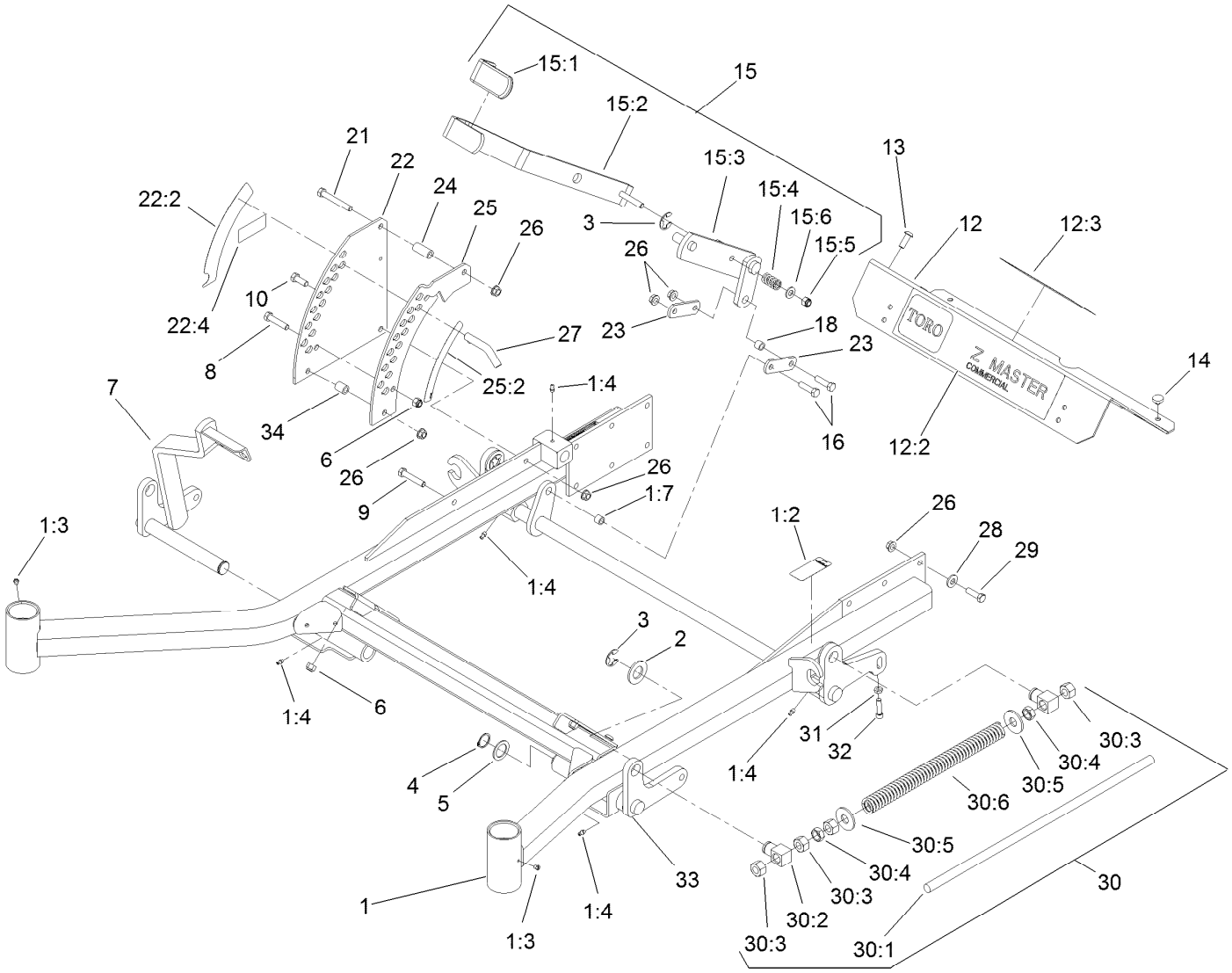

Front Frame Assembly (continued)

Ref.	Part Number	Qty.	Description
26	3290-357	17	Nut-HHF, Whiz
27	109-8757	1	Pin-HOC
28	98-5975	12	Washer-Belleville
29	323-7	12	Screw-HH
30		2	Front Frame Spring ASM ●
30:1	1-633096	1	Rod-Lift, Deck
30:2	1-633441	2	Swivel-Deck Mount, Rear
30:3	3217-11	3	Nut-Hex

Ref.	Part Number	Qty.	Description
30:4	3218-6	3	Nut-Jam
30:5	3256-7	2	Washer-Flat
30:6	1-643015	1	Spring-Support, Deck
31	3218-2	2	Nut-Jam
32	3274-18	2	Screw-HSH
33	106-8984-01	1	Lift-Deck, LH
34	1-633080	1	Bushing-Lever, Lift

● Not serviced separately

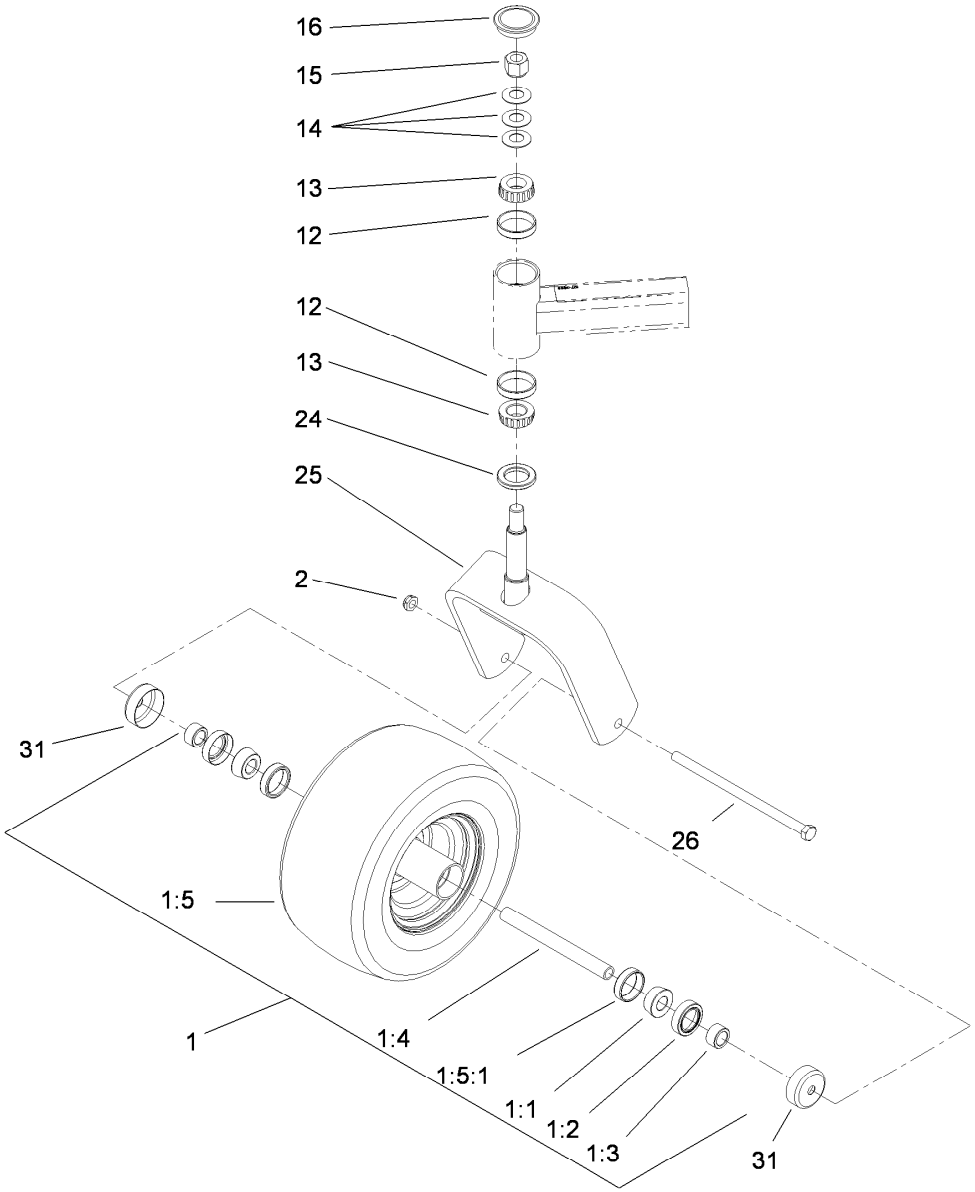

Fork and Caster Wheel Assembly

Ref.	Part Number	Qty.	Description
1	109-9125	2	Wheel And Tire ASM
1:1	1-633585	2	Bearing-Cone, Taper
1:2	103-0063	2	Seal-Caster
1:3	103-3051	2	Spacer-Nut ●
1:4	103-5156	1	Axle-Caster
1:5	109-9124	1	Wheel And Tire ASM
1:5:1	1-633584	1	Bearing-Cup
2	3296-45	2	Nut-Hex
12	254-72	4	Bearing-Cup, Tapered

Ref.	Part Number	Qty.	Description
13	254-94	4	Bearing-Cone, Tapered
14	1-633508	6	Washer-Bellville
15	3296-51	2	Nut-Lock, NI
16	103-4882	2	Cap-Grease
24	1-543511	2	Seal-Grease
25	103-1474-01	2	Caster-Fork
26	325-39	2	Screw-HH
31	103-2768	4	Guard-Seal

● Use Pro-Lock, Nut Type (P/N 1-840022, .5ml tube) on threads.

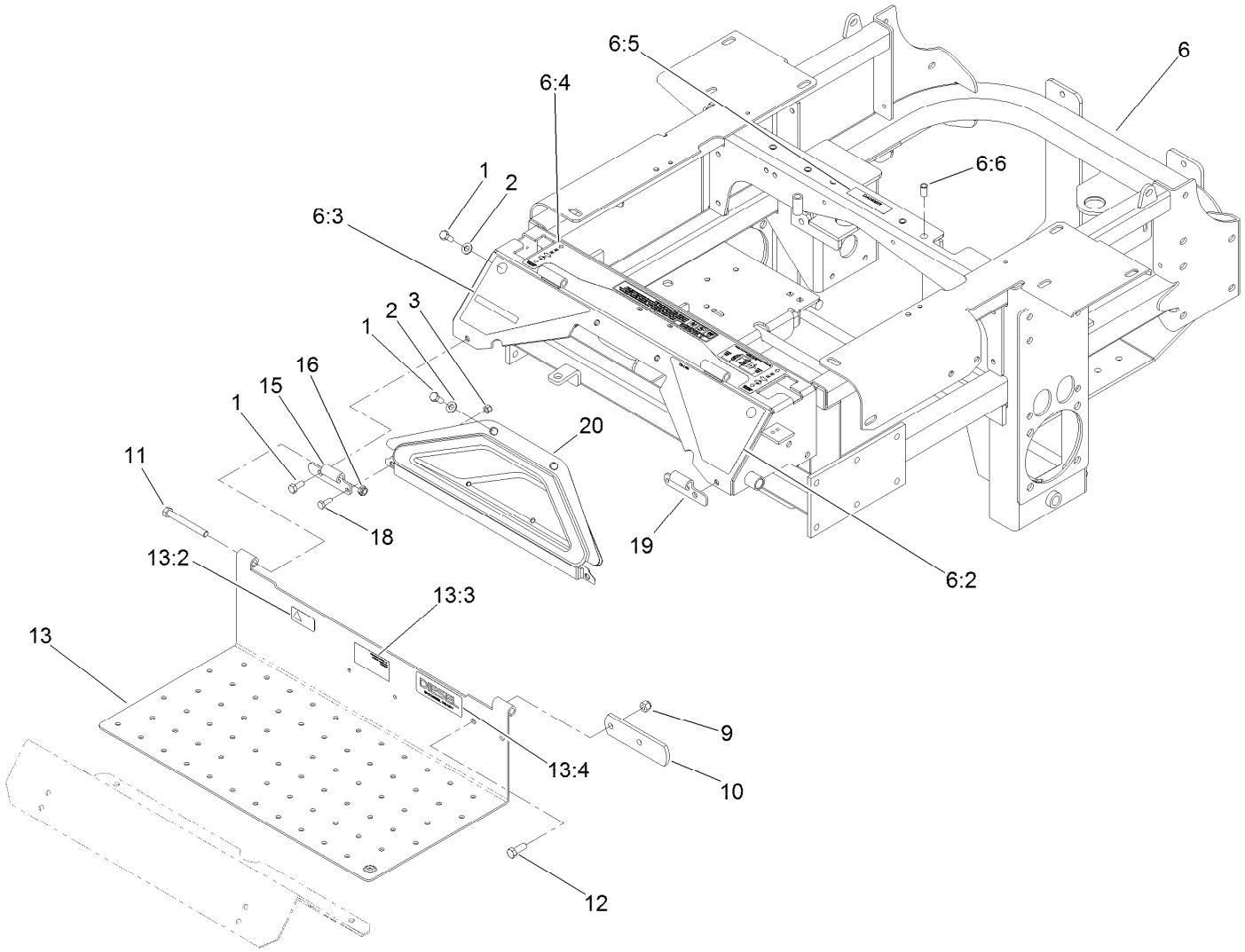

Traction Frame and Floor Pan Assembly

Ref.	Part Number	Qty.	Description
1	322-43	6	Screw-HH
2	3256-70	4	Washer-Flat
3	3296-42	2	Nut-Lock, NI
6	114-8194	1	Traction Frame ASM
6:2	106-9989	1	Decal-Warning
6:3	106-7492	1	Decal-Danger
6:4	110-0819	1	Decal-Console, Top
6:5	98-5954	1	Decal-Cover, Missing
6:6	32148-11	5	Nut-Clinch
9	3296-39	2	Nut-Lock, NI
10	1-633964-03	1	Stop-Brake, Park

Ref.	Part Number	Qty.	Description
11	323-20	2	Screw-HH
12	323-6	2	Screw-HH
13	115-3852	1	Floor Pan ASM
13:2	98-4387	1	Decal-Protection, Ear
13:3	107-1864	1	Decal-Location, Manual
13:4	121-7559	1	Decal-Diesel, Bio-Ready
15	106-7488-03	1	Hinge-Floorpan, LH
16	3296-59	2	Nut-Lock, NI
18	321-4	2	Screw-HH
19	106-7489-03	1	Hinge-Floorpan, RH
20	106-7498	1	Pocket

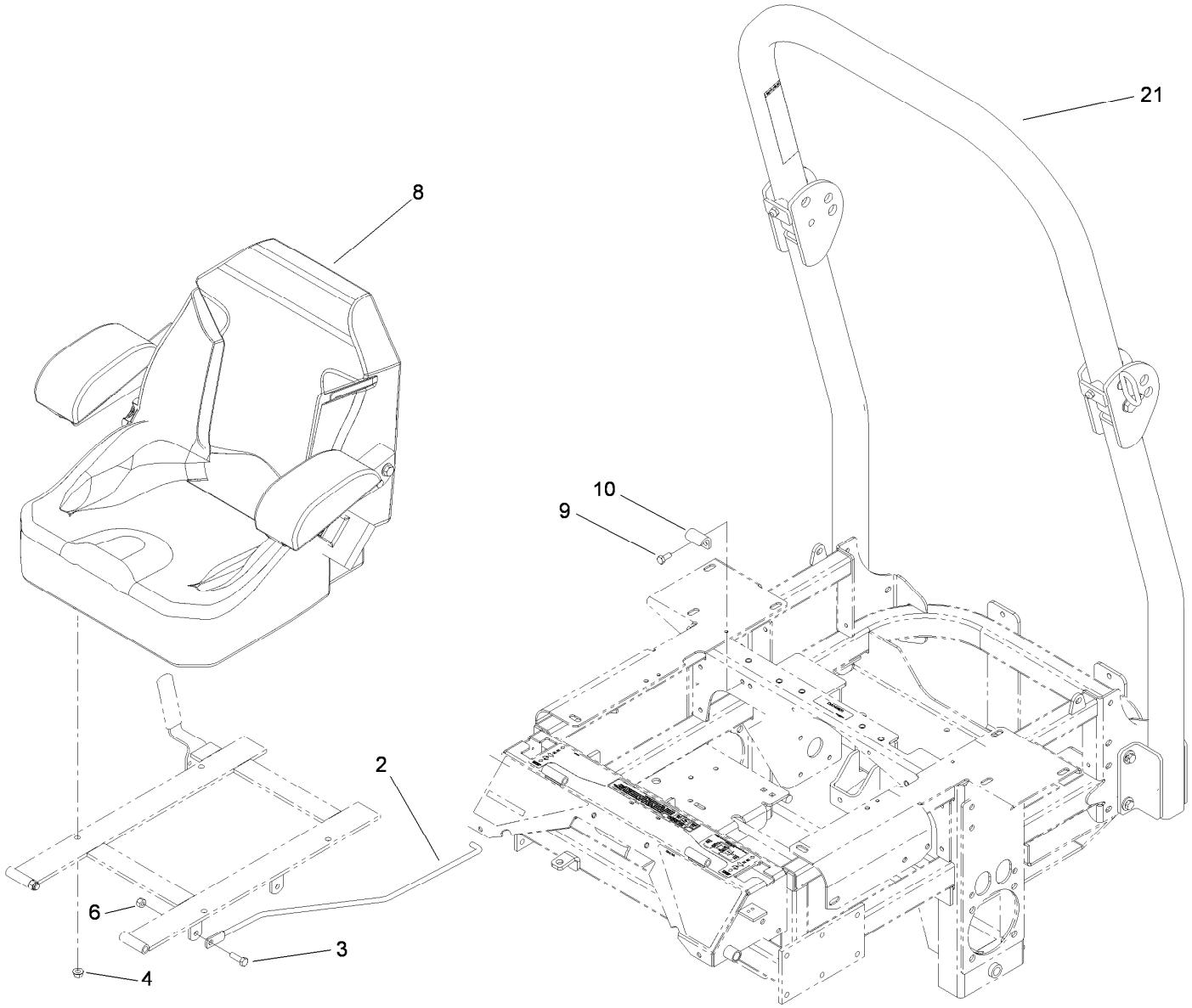

Seat and Roll-Over Protection System Assembly

Ref.	*Part Number*	*Qty.*	*Description*
2	108-5341	1	Rod-Prop, Seat
3	322-5	1	Screw-HH
4	32128-20	4	Nut-HF
6	3296-29	3	Nut-Lock, NI
8	116-0035	1	Seat-Standard
9	322-3	2	Screw-HH
10	107-3058	1	Catch-Latch, Seat
21	117-3866	1	ROPS Kit

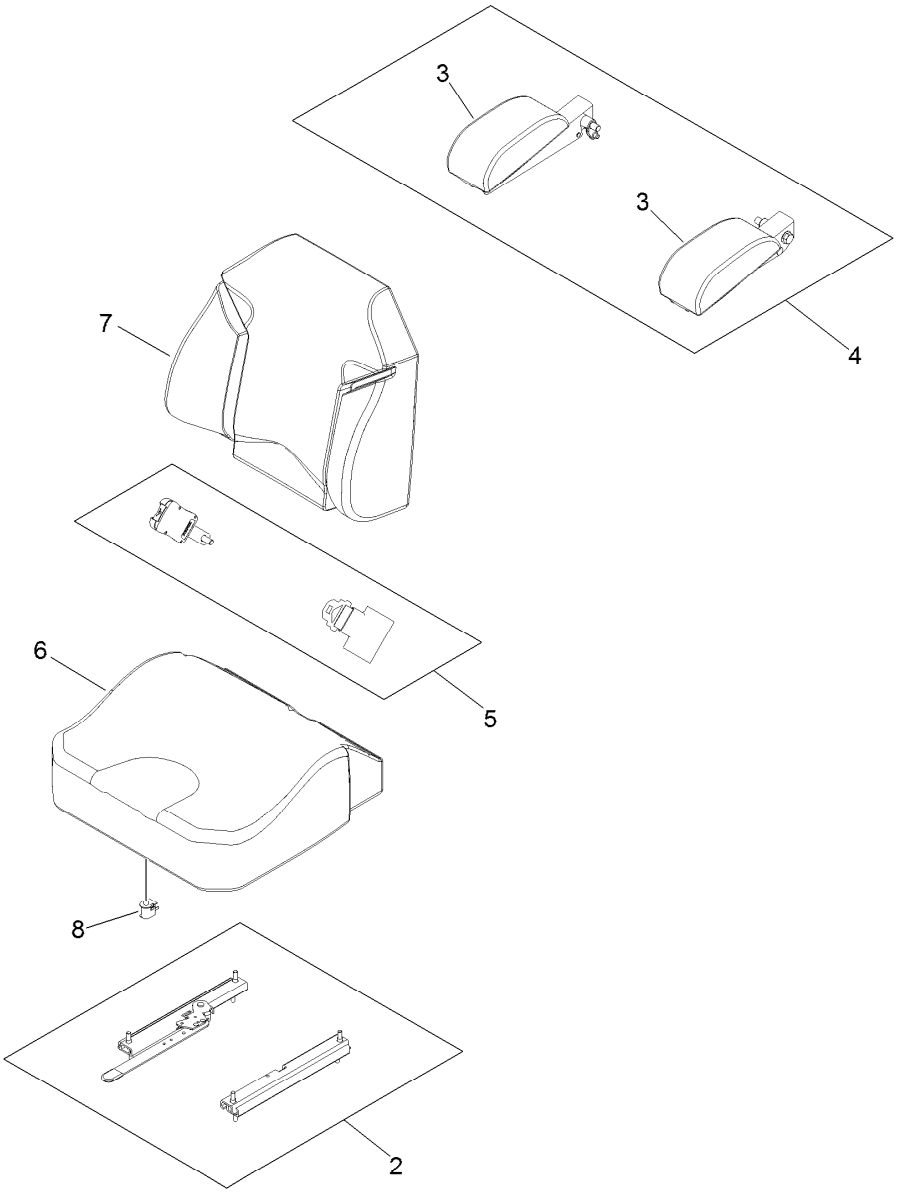

Seat Assembly No. 116-0035

Ref.	Part Number	Qty.	Description
2	109-9801	1	Seat Track Set
3	109-9802	1	Arm Rest Pad Set
4	109-9803	1	Arm Rest Set
5	109-9805	1	Seat Belt Kit
6	109-9806	1	Cover-Cushion
7	109-9808	1	Cover-Back
8	82-2190	1	Switch-Bail

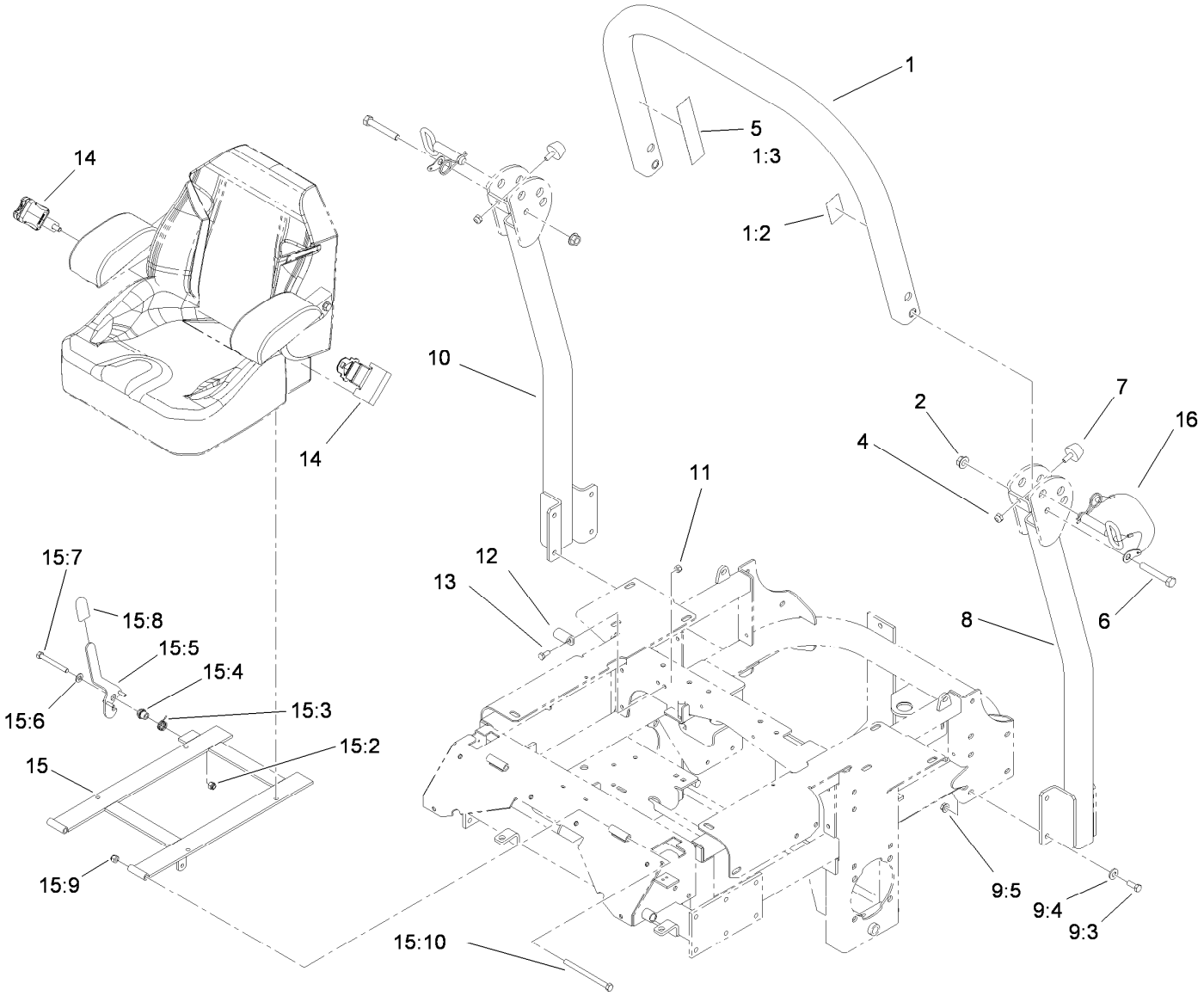

Roll-Over Protection System Assembly No. 117-3866

Ref.	Part Number	Qty.	Description
1		1	Upper Tube ASM ■
1:2	107-2101	1	Decal-ROPS
1:3	107-2102	1	Decal-Warning, Folding ROPS
2	32128-23	2	Nut-HF
4	3296-73	2	Nut-Lock, NI
5	107-3069	1	Decal-Warning
6	325-13	2	Screw-HH
7	109-2365	2	Bumper-Rubber
8		1	Tube-Support, LH ■
9		1	Bag-Bolt, ROPS ● ■
9:3	323-6	8	Screw-HH
9:4	98-5975	8	Washer-Belleville
9:5	3290-357	8	Nut-HHF, Whiz
10		1	Tube-Support, RH ■

Ref.	Part Number	Qty.	Description
11	3296-29	2	Nut-Lock, NI
12	107-3058	1	Catch-Latch, Seat
13	322-3	2	Screw-HH
14	109-9805	1	Seat Belt Kit
15	110-0874	1	Seatframe ASM
15:2	3296-39	1	Nut-Lock, NI
15:3	107-0076	1	Spring-Torsion
15:4	107-0075	1	Bushing-Latch, Seat
15:5	107-3083	1	Latch ASM
15:6	3256-24	1	Washer-Flat
15:7	323-20	1	Screw-HH
15:8	103-4434	1	Grip-Lever
15:9	3296-39	2	Nut-Lock, NI
15:10	323-39	2	Screw-HH
16	103-4553	2	Pin-Fold, ROPS

● Not illustrated

■ Not serviced separately

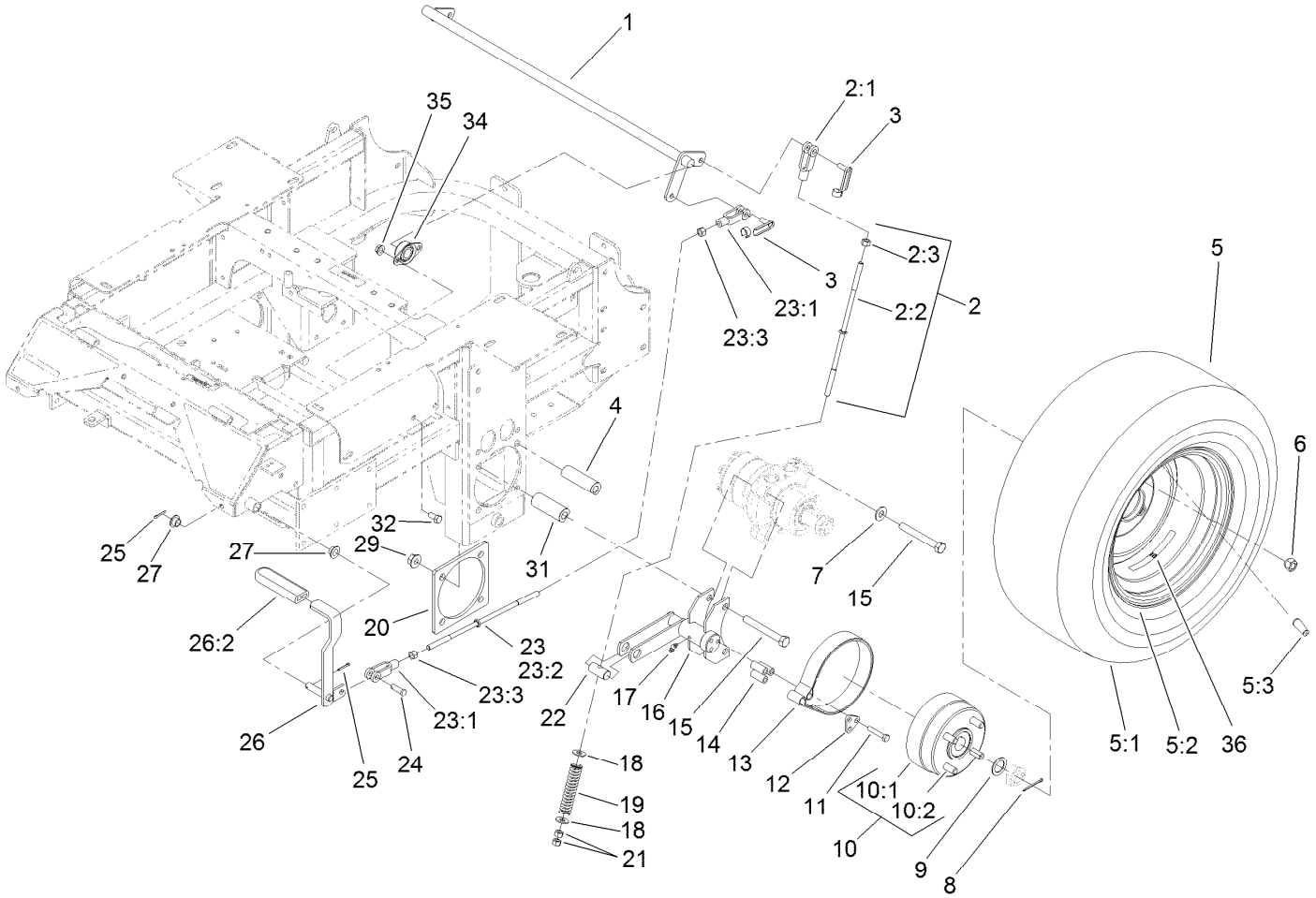

Main Frame and Rear Wheel Assembly

Ref.	Part Number	Qty.	Description
1	1-632217-03	1	Shaft-Brake
2	108-5963	2	Brake Rod ASM
2:1	1-633131	1	Yoke-Linkage, Brake
2:2	108-5980	1	Rod-Brake
2:3	3219-3	1	Nut-Hex
3	103-2399	3	Pin-Spring, Clevis
4	109-5012	4	Spacer-Wheel, Long
5	109-8972	2	Wheel And Tire ASM
5:1	1-633993	1	Tire
5:2	109-3156	1	Rim
5:3	232-27	1	Stem-Valve
6	242-50	8	Nut-Lug
7	87-7270	4	Washer-Thrust
8	1-806800	2	Pin-Cotter
9	1-523157	2	Washer-Spacer
10	103-0590	2	Wheel Hub ASM
10:1	103-0589	1	Hub-Wheel
10:2	1-633926	4	Stud-Wheel
11	322-9	6	Screw-HH
12	103-0374	2	Retainer-Band, Brake
13	103-0355	2	Band-Brake

Ref.	Part Number	Qty.	Description
14	103-0384	6	Spacer
15	325-33	8	Screw-HH
16	103-0354-03	2	Brake Bracket ASM
17	1481	2	Fitting-Grease
18	3256-4	4	Washer-Flat
19	1-633454	2	Spring-Brake
20	103-3271-03	2	Plate-Reinforcement
21	3219-3	4	Nut-Hex
22	1-633144	2	Pin-Trunion
23	108-5962	1	Brake Rod ASM
23:1	1-633131	2	Yoke-Linkage, Brake
23:2	1-633477	1	Rod-Brake
23:3	3219-3	2	Nut-Hex
24	1-808285	1	Pin-Clevis
25	3272-10	2	Pin-Cotter
26	1-634500	1	Brake Lever ASM
26:2	1-633268	1	Grip-Lever
27	1-513140	2	Bearing-Control
29	32128-49	8	Nut-HHF
31	109-5011	4	Spacer-Wheel, Short
32	323-4	4	Screw-HH

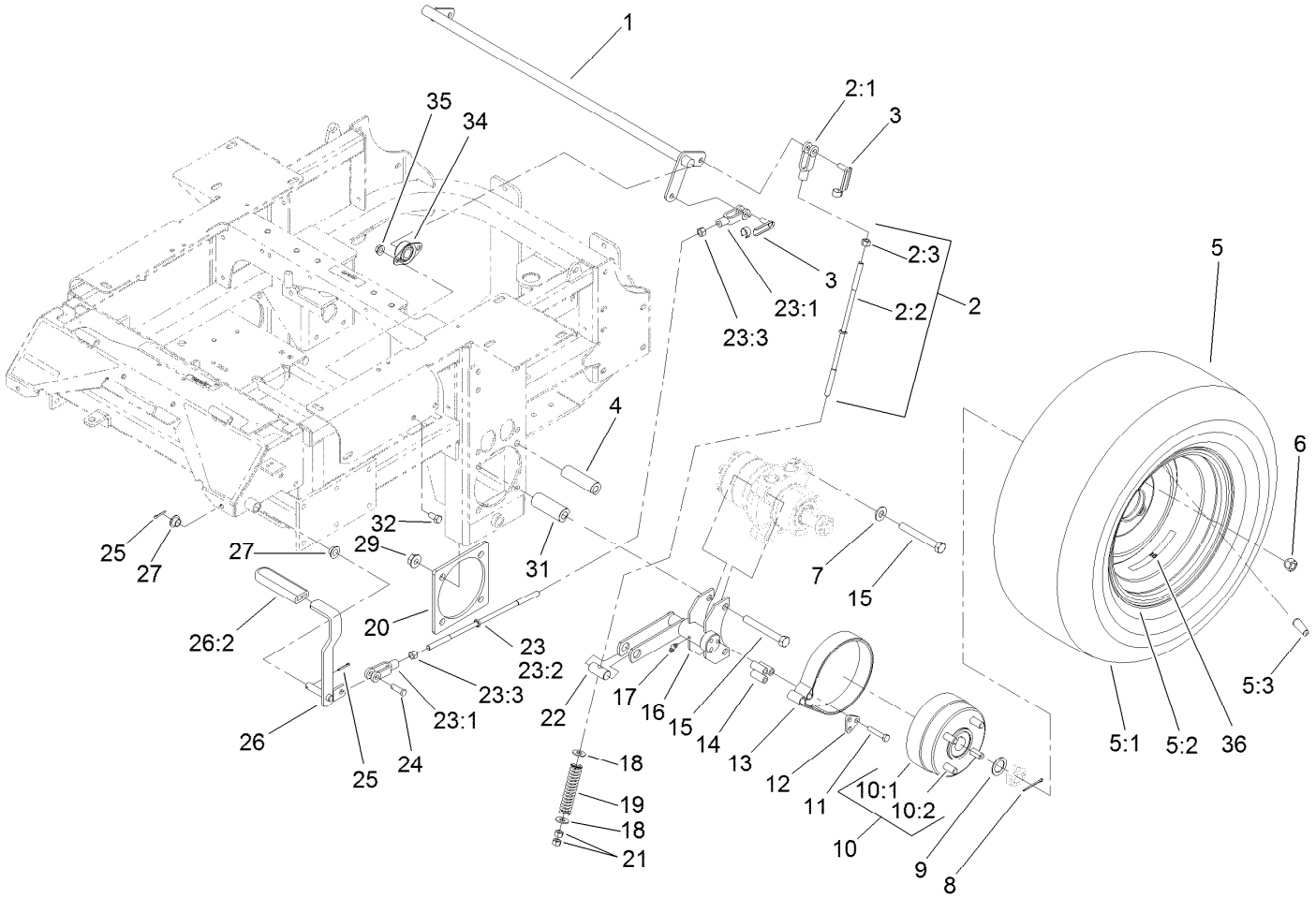

Main Frame and Rear Wheel Assembly (continued)

Ref.	Part Number	Qty.	Description
34	1-633102	2	Bearing-Flange, Side
35	3290-357	4	Nut-HHF, Whiz
36	109-7949	2	Decal

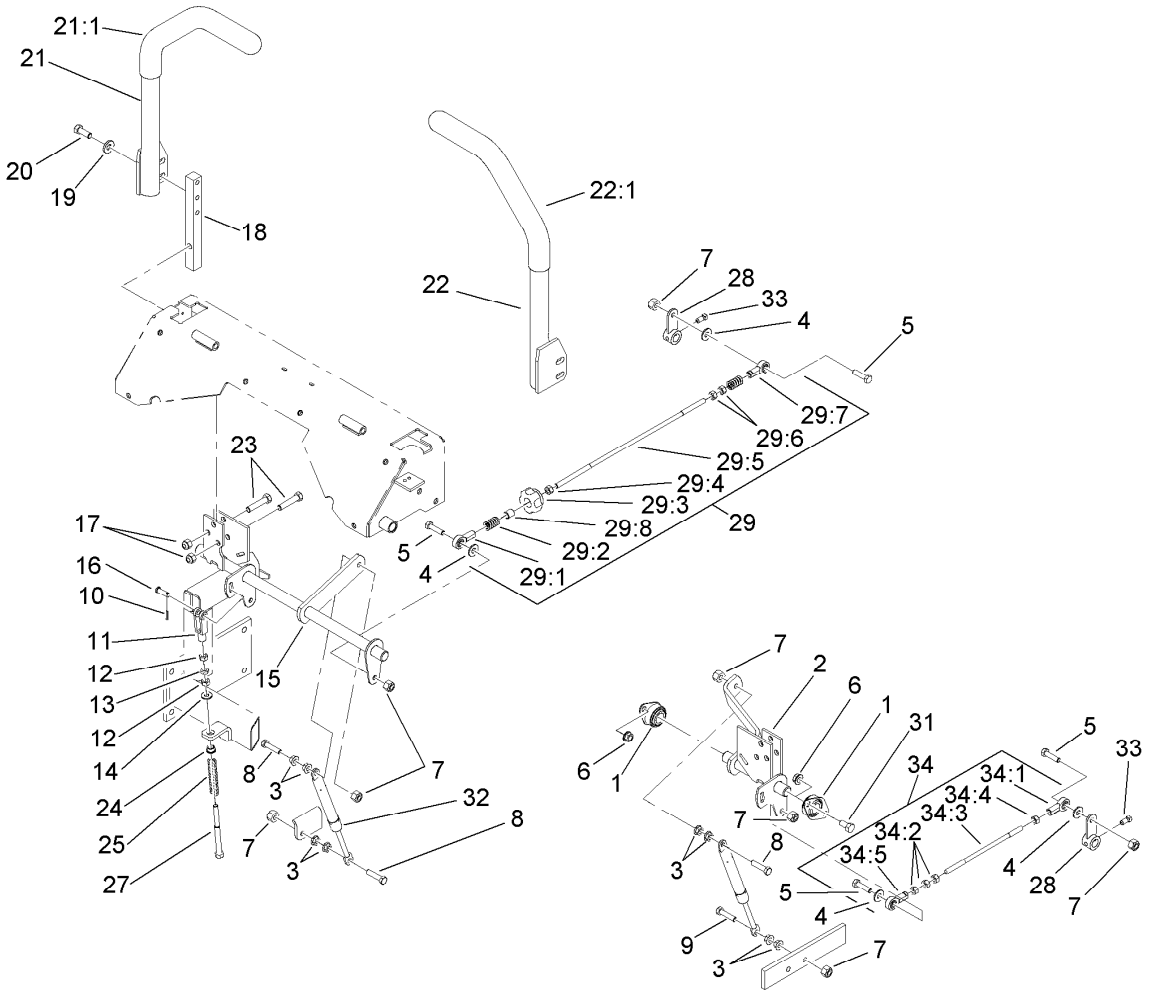

Hydro Control Assembly

Ref.	Part Number	Qty.	Description
1	1-633102	4	Bearing-Flange, Side
2	107-3480	1	Control-Motion, LH
3	32128-20	10	Nut-HF
4	3256-3	4	Washer-Flat
5	322-6	4	Screw-HH
6	3290-357	6	Nut-HHF, Whiz
7	3296-29	8	Nut-Lock, NI
8	1-403180	3	Screw-HH
9	322-41	1	Screw-HH
10	3272-5	2	Pin-Cotter
11	1-303105	2	Yoke-Adjustable
12	3219-2	4	Nut-Hex
13	3220-2	2	Nut-Jam
14	3256-2	2	Washer-Flat
15	107-3481	1	Control-Motion, RH
16	1-808280	2	Pin-Clevis
17	3296-39	6	Nut-Lock, NI
18	103-0407	2	Arm-Shaft, Control
19	98-5975	4	Washer-Belleville
20	323-6	4	Screw-HH
21	108-7237	1	RH Lever ASM
21:1	106-9987	1	Grip-Control, Motion
22	108-7238	1	LH Lever ASM
22:1	106-9987	1	Grip-Control, Motion

Ref.	Part Number	Qty.	Description
23	323-9	6	Screw-HH
24	1-603735	2	Bushing-Flanged
25	1-603807	2	Spring-Return, Neutral
27	1-603737	2	Bolt-Return, Neutral
28	107-3470-03	2	Arm-Control, Hydraulic
29	107-3474	1	RH Control Rod ASM
29:1	1-543017	1	Balljoint-RH
29:2	1-323245	2	Spring-Compression
29:3	103-3060	1	Knob-Tracking
29:4	3219-2	1	Nut-Hex
29:5	107-3472	1	Rod-Control, RH
29:6	1-804524	2	Nut
29:7	1-633152	1	Balljoint-LH
29:8	103-1166	1	Spacer-Tube, Pump Link
31	323-4	6	Screw-HH
32	109-2339	2	Damper-Control, Motion
33	1-803022	2	Screw-Set
34	107-3475	1	LH Control Rod ASM
34:1	1-543017	1	Balljoint-RH
34:2	3219-2	3	Nut-Hex
34:3	107-3473	1	Rod-Control, LH
34:4	1-804524	1	Nut
34:5	1-633152	1	Balljoint-LH

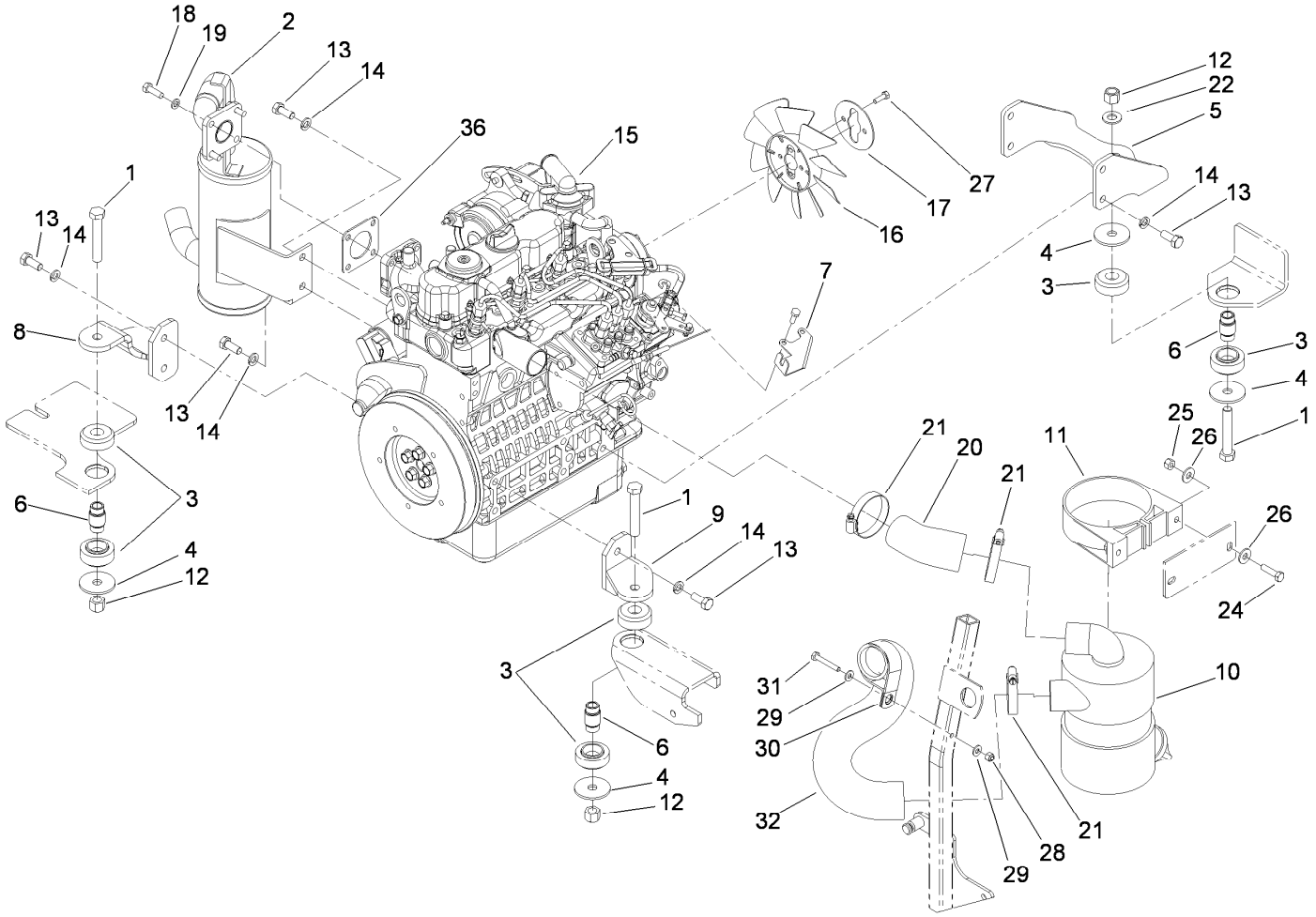

Engine, Exhaust and Air Intake Assembly

Ref.	Part Number	Qty.	Description
1	325-12	3	Screw-HH
2	107-9909	1	Muffler
3	107-9914	3	Mount-Isolation ASM
4	55-7960	4	Washer-Large
5	107-9917-03	1	Bracket-Engine Mount, Rear
6	110-0300	3	Spacer
7	112-2383	1	Bracket-Throttle
8	107-9920-03	1	Support-Engine, RH
9	107-9930-03	1	Support-Engine, LH
10	93-2190	1	Air Cleaner ASM
11	95-5806	1	Bracket-Mounting
12	3296-23	3	Nut-Lock, NI
13	43-0090	10	Screw-HH
14	42-9600	10	Washer-Lock
15	114-8170	1	Engine-Kubota
16	110-0814	1	Fan

Ref.	Part Number	Qty.	Description
17	110-0816	1	Plate-Reatainer, Fan
18	33114-025	4	Screw-HH
19	3253-4	4	Washer-Lock
20	108-5371	1	Hose-Intake, Air Cleaner
21	1-643009	3	Clamp-Hose
22	3256-26	1	Washer-Flat
24	322-6	2	Screw-HH
25	3296-29	2	Nut-Lock, NI
26	3256-23	4	Washer-Plain
27	33113-020	2	Screw-HH
28	3296-42	1	Nut-Lock, NI
29	3256-22	2	Washer-Flat
30	1-643241	1	Clip-Loom
31	321-10	1	Screw-HH
32	108-5370	1	Hose-Intake, Engine
36	99-8343	1	Gasket-Muffler

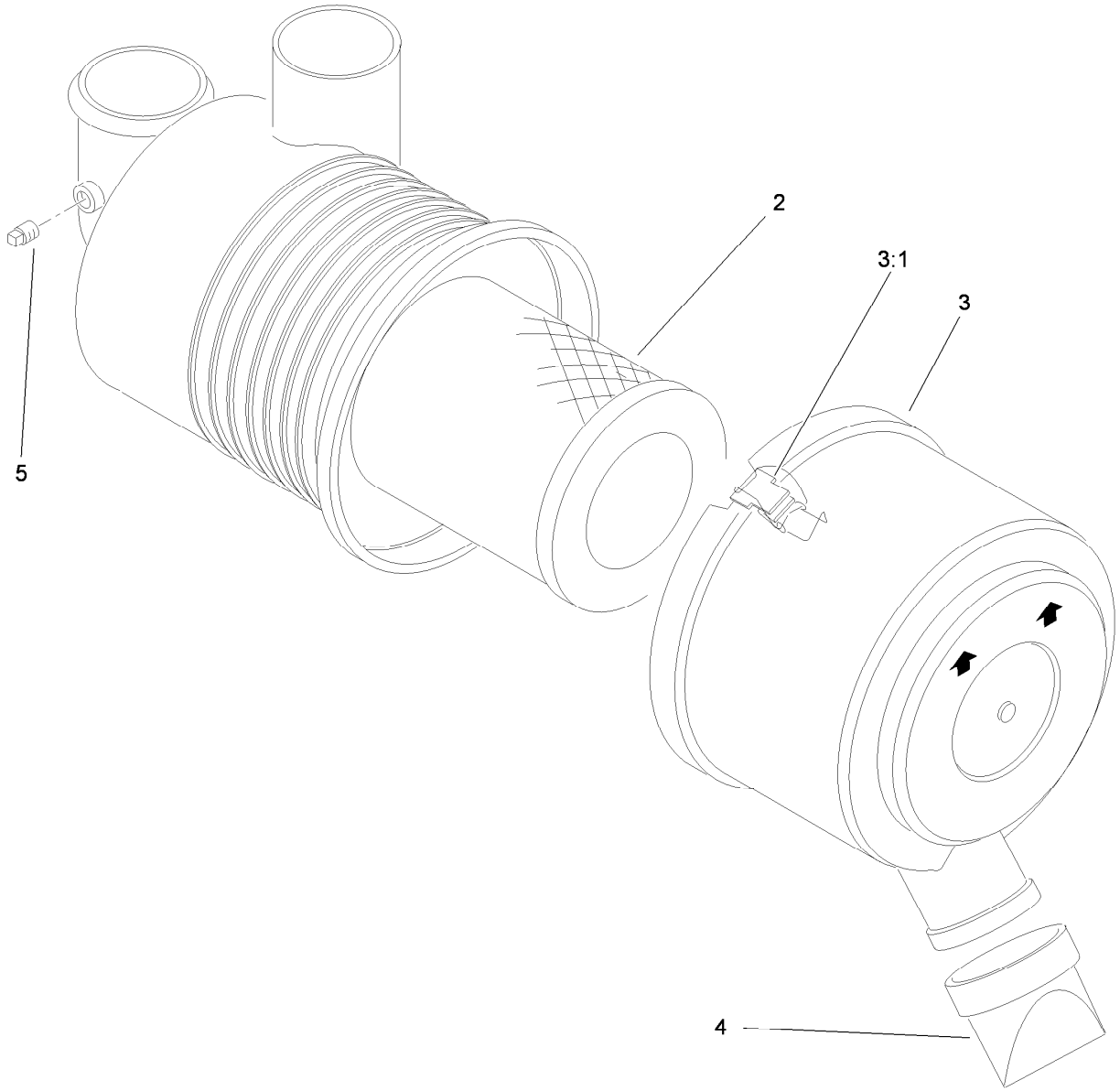

Air Cleaner Assembly No. 93-2190

Ref.	*Part Number*	*Qty.*	*Description*
2	108-3811	1	Filter-Air
3	94-3652	1	Cover ASM
3:1	1-643283	2	Latch-Cleaner, Air
4	87-9400	1	Valve-Vacuator
5	285-17	1	Plug-Pipe

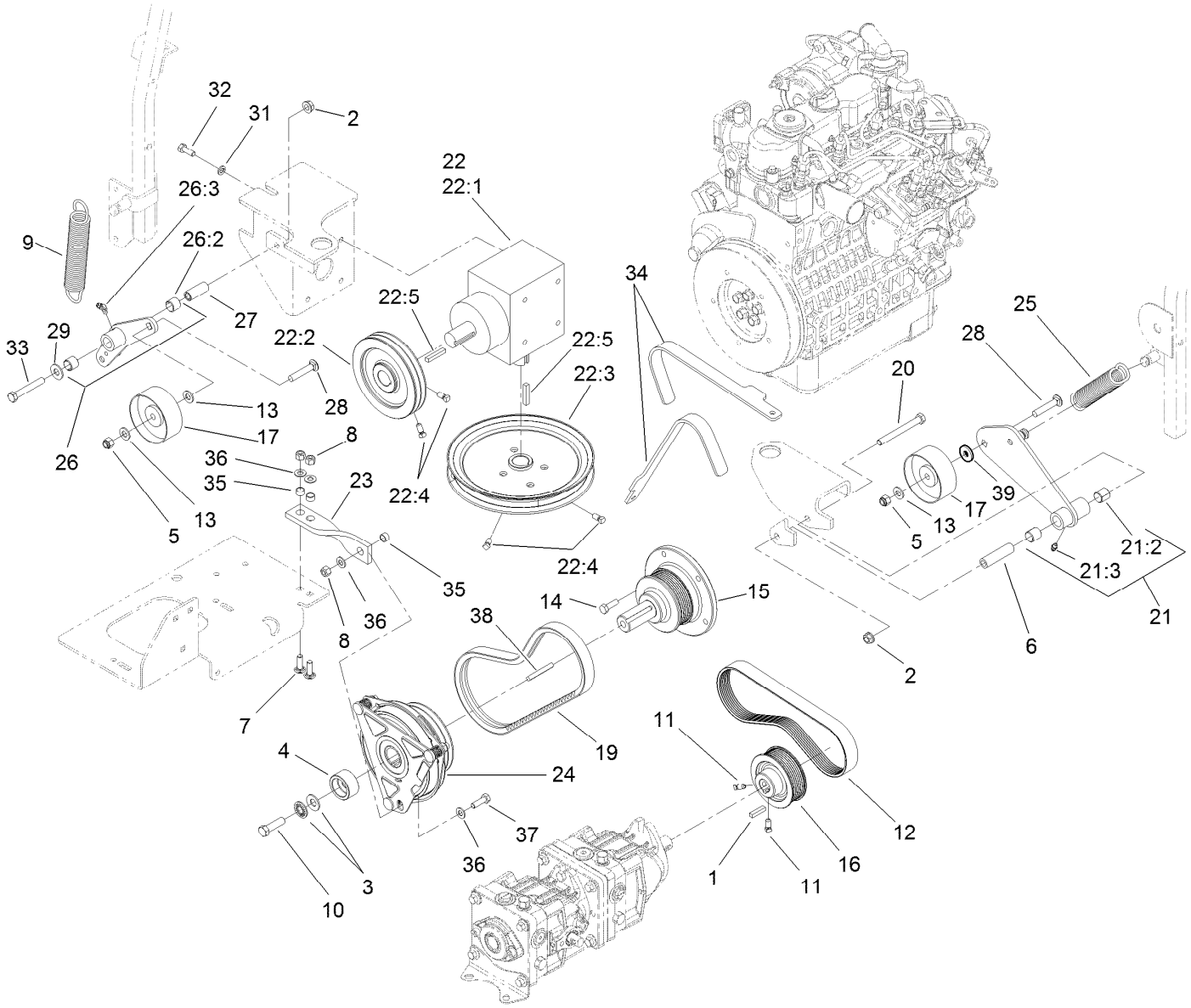

Hydro and Gearbox Assembly

Ref.	Part Number	Qty.	Description
1	5-0698	1	Key
2	3290-357	2	Nut-HHF, Whiz
3	1-603610	2	Washer-Spring
4	114-8152	1	Retainer-Clutch
5	3296-39	2	Nut-Lock, NI
6	1-603384	1	Bushing-Pivot, Idler
7	3230-22	2	Screw-CARR
8	3296-29	3	Nut-Lock, NI
9	110-0822	1	Spring-Extension
10	3212-6	1	Screw-HH
11	1-803022	2	Screw-Set
12	110-3865	1	Belt-V, Ribbed
13	3256-24	4	Washer-Flat
14	33114-025	5	Screw-HH
15	112-2335	1	Shaft-Stub
16	110-3864	1	Pulley
17	108-5910	2	Pulley-Flat
19	110-3866	1	Belt-V

Ref.	Part Number	Qty.	Description
20	323-15	1	Screw-HH
21	108-5939	1	Pump Idler Arm ASM
21:2	1-513034	2	Sleeve-Bearing
21:3	302-5	1	Fitting-Grease
22		1	Gearbox ASM ●
22:1	107-9887	1	Gearbox-90 DEG
22:2	110-3862	1	Pulley
22:3	110-0892	1	Pulley
22:4	1-803022	4	Screw-Set
22:5	67-7490	2	Key-Square
23	112-1781	1	Strap-Stop, Clutch
24	112-2320	1	Clutch-Magnetic
25	119-0394	1	Spring-Extension
26	112-2356	1	Gearbox Idler Arm ASM
26:2	103-4681	2	Sleeve-Bearing
26:3	1481	1	Fitting-Grease
27	1-603044	1	Bushing
28	3231-6	2	Screw-CARR

● Not serviced separately

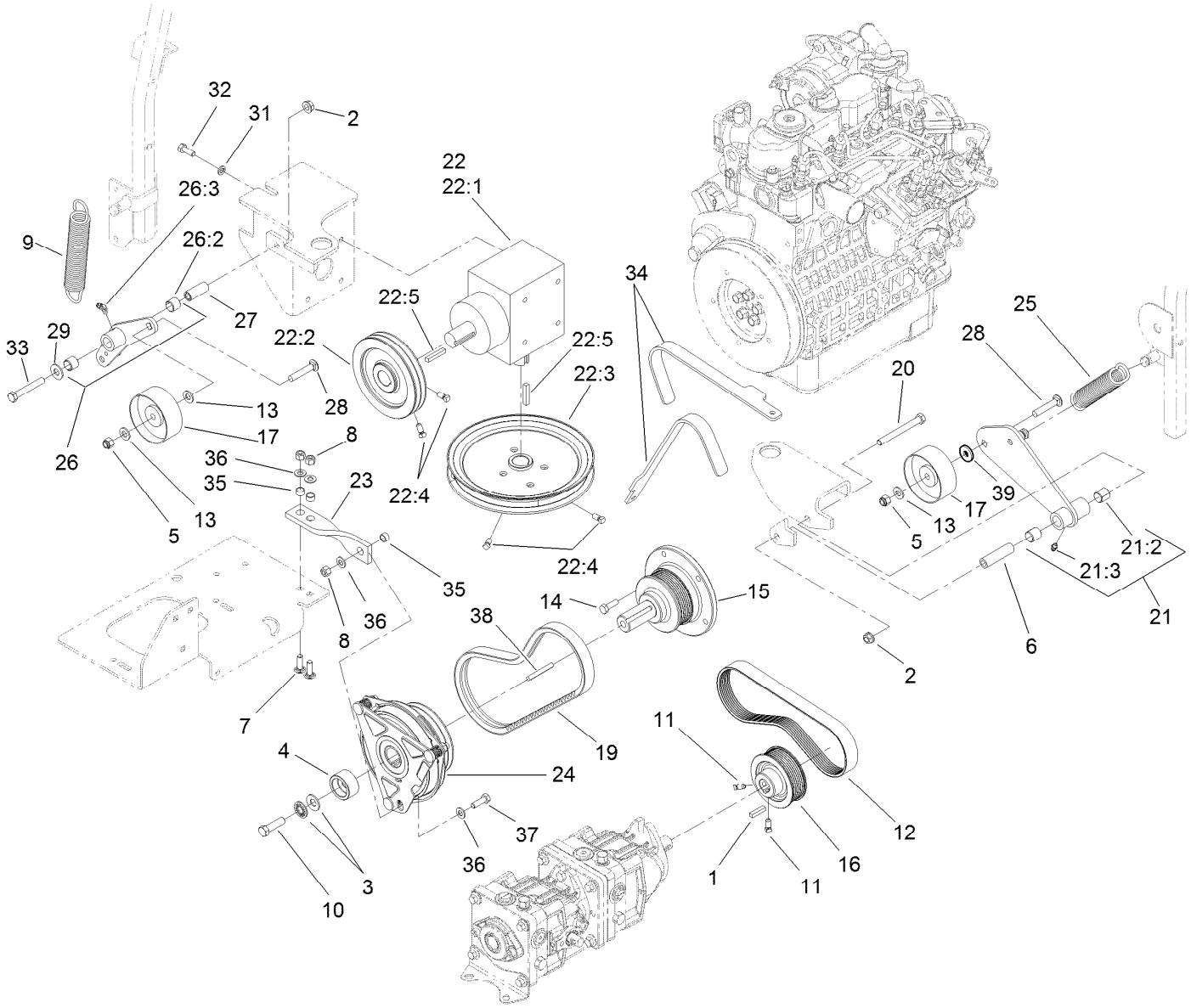

Hydro and Gearbox Assembly (continued)

Ref.	Part Number	Qty.	Description
29	3256-4	1	Washer-Flat
31	3253-4	4	Washer-Lock
32	322-4	4	Screw-HH
33	323-12	1	Screw-HH
34	110-0876	1	Tool-Alignment, Pulley

Ref.	Part Number	Qty.	Description
35	65-9820	3	Spacer
36	3256-23	4	Washer-Plain
37	322-5	1	Screw-HH
38	5-1336	1	Key-Square
39	1-373034	1	Washer

● Not serviced separately

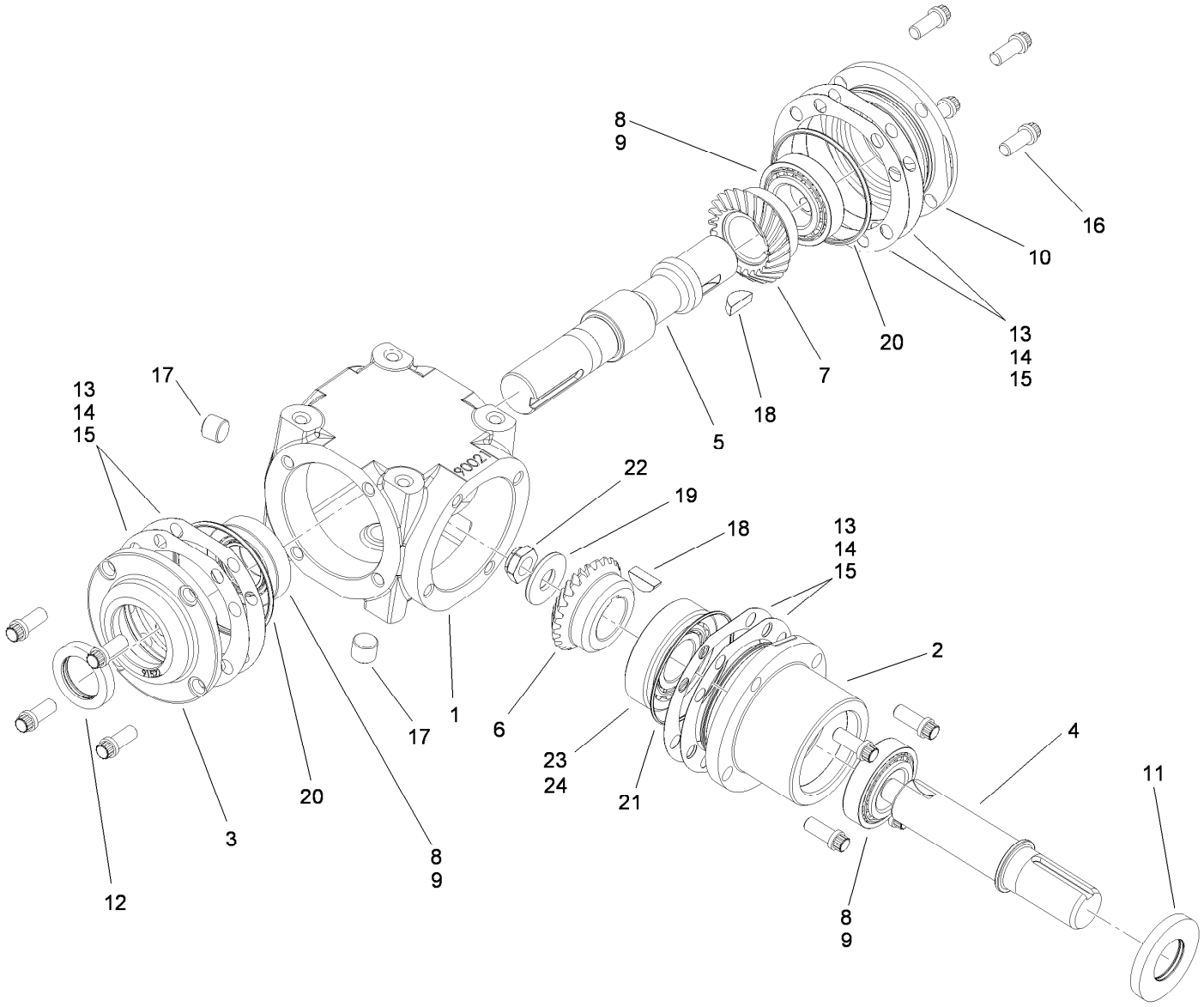

Gearbox Assembly No. 107-9887

Ref.	Part Number	Qty.	Description
1	110-0843	1	Case
2	110-0853	1	Housing-Pinion
3	100-4566	1	Cap-End, Open
4	110-0844	1	Shaft-Pinion
5	110-0845	1	Shaft-Cross
6	110-0847	1	Gear-Shaft, Cross
7	110-0846	1	Gear-Pinion
8	110-0848	3	Bearing-Cup
9	110-0849	3	Bearing-Cone
10	100-4574	1	Cap-End, Closed
11	100-4575	1	Seal
12	110-0850	1	Seal-Shaft, Cross

Ref.	Part Number	Qty.	Description
13	100-4591	1	Shim-Brown, .010In
14	100-4592	1	Shim-Blue, .005In
15	100-4593	1	Shim-Green, .003In
16	100-4578	12	Screw
17	100-4579	2	Plug
18	3257-33	2	Key-Woodruff
19	100-4581	1	Washer
20	100-4582	2	O-Ring
21	110-0851	1	O-Ring
22	110-0852	1	Nut Lock
23	100-5817	1	Bearing-Cup
24	100-5816	1	Bearing-Cone

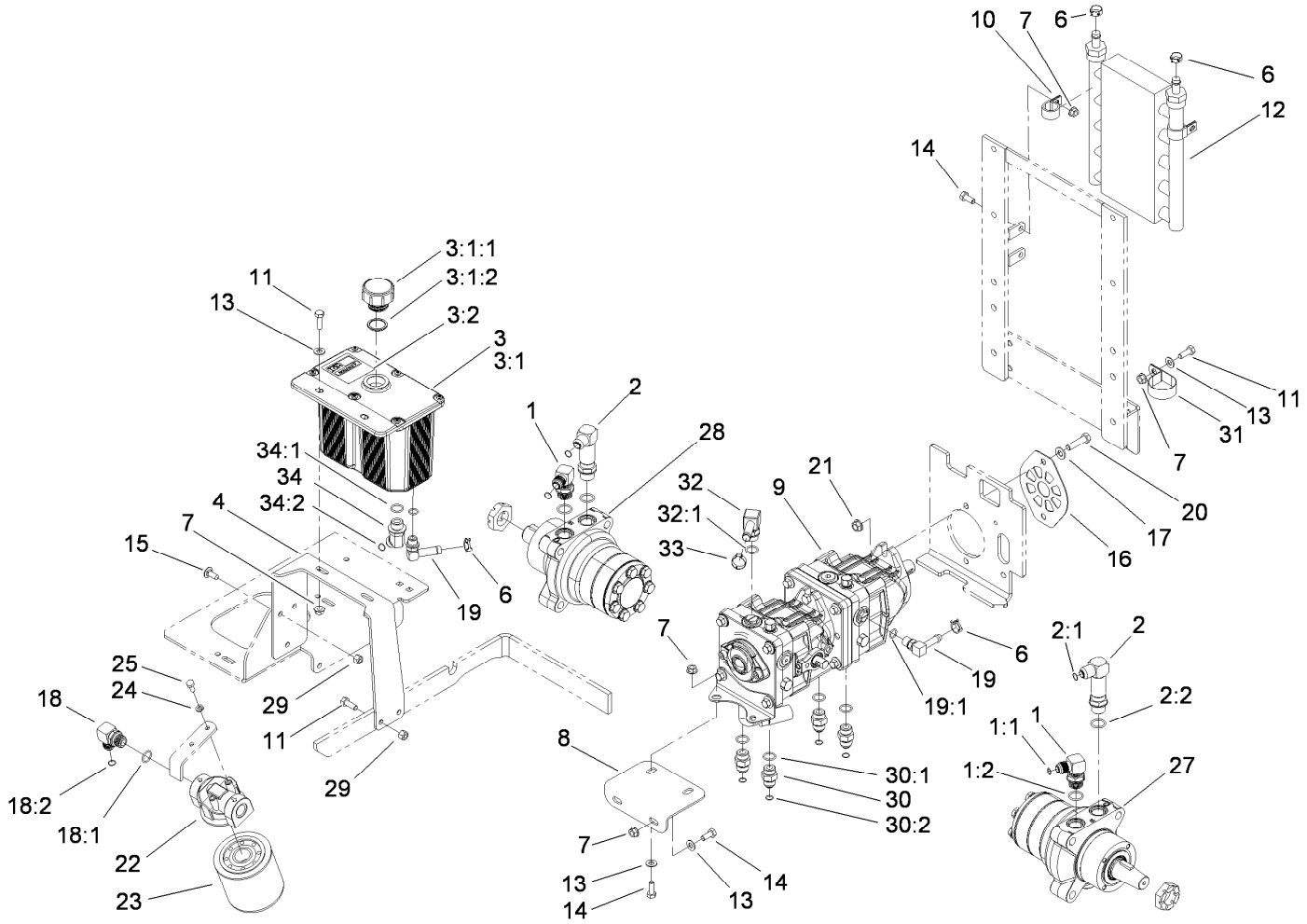

Hydraulic Tank, Pump and Motor Assembly

Ref.	Part Number	Qty.	Description
1	1-633605	2	Fitting-HYD, 90 DEG
1:1	1-603992	1	O-Ring
1:2	237-80	1	O-Ring
2	108-5323	2	Fitting-Elbow-90
2:1	1-603992	1	O-Ring
2:2	237-80	1	O-Ring
3	108-5320	1	Hydraulic Tank ASM
3:1		1	Tank-Hydraulic ●
3:1:1	103-1948	1	Cap-Reservoir, HYD
3:1:2	103-1949	1	Gasket-Cap
3:2	115-4212	1	Decal-Warning
4	108-5352-03	1	Bracket-Tank, Hydraulic
6	110-6242	4	Clamp-Hose
7	32128-20	11	Nut-HF
8	107-3462-03	1	Bracket-Pump, Front
9	107-9885	1	Tandem Pump ASM
10	110-0824	4	R-Clamp
11	322-5	4	Screw-HH

Ref.	Part Number	Qty.	Description
12	114-8168	1	Cooler-Oil, Hydro
13	3256-23	7	Washer-Plain
14	322-3	8	Screw-HH
15	3230-23	3	Screw-CARR
16	108-5367-03	1	Plate-Shield, Pump
17	3256-24	2	Washer-Flat
18	103-2153	1	Fitting-90 DEG
18:1	1-603920	1	O-Ring
18:2	1-603992	1	O-Ring
19	109-6449	2	Fitting-Elbow, 90
19:1	237-42	1	O-Ring
20	323-8	2	Screw-HH
21	3290-357	2	Nut-HHF, Whiz
22	86-9080	1	Head-Filter
23	67-8110	1	Cartridge-Filter, Oil
24	1-805004	2	Washer-Lock
25	321-3	2	Screw-HH
27	112-8357	1	HYD Motor ASM (CCW)

● Not serviced separately

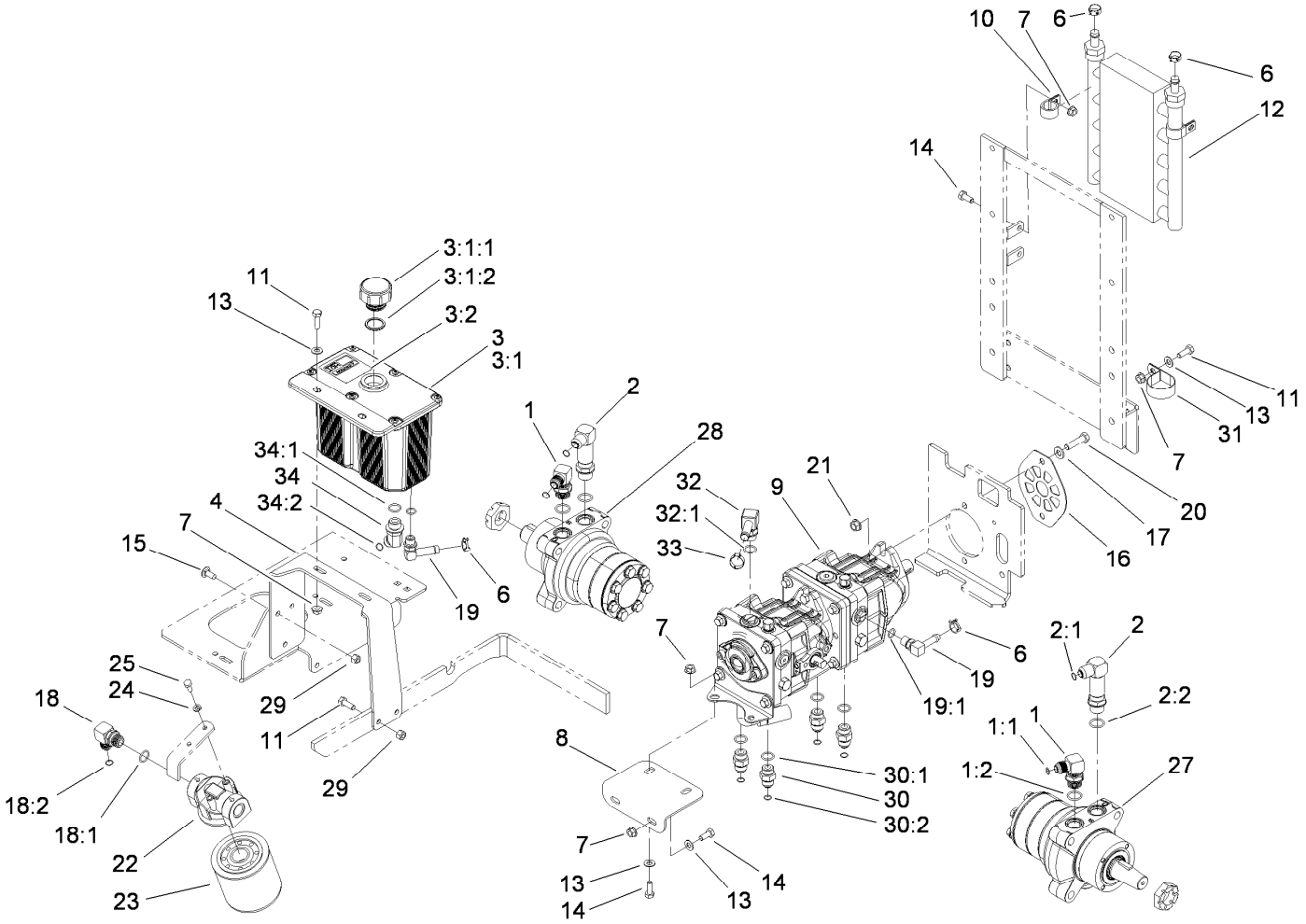

Hydraulic Tank, Pump and Motor Assembly (continued)

Ref.	Part Number	Qty.	Description
28	112-8358	1	HYD Motor ASM (CW)
29	3296-29	4	Nut-Lock, NI
30	1-603990	4	Fitting-Straight
30:1	1-603920	1	O-Ring
30:2	1-603992	1	O-Ring
31	2412-147	1	Clamp-R

Ref.	Part Number	Qty.	Description
32	108-5316	1	Fitting-Elbow, 90 DEG
32:1	237-79	1	O-Ring
33	109-6801	1	Clamp-Hose
34	1-523221	1	Fitting-HYD, 45 DEG
34:1	1-603920	1	O-Ring
34:2	1-603992	1	O-Ring

● Not serviced separately

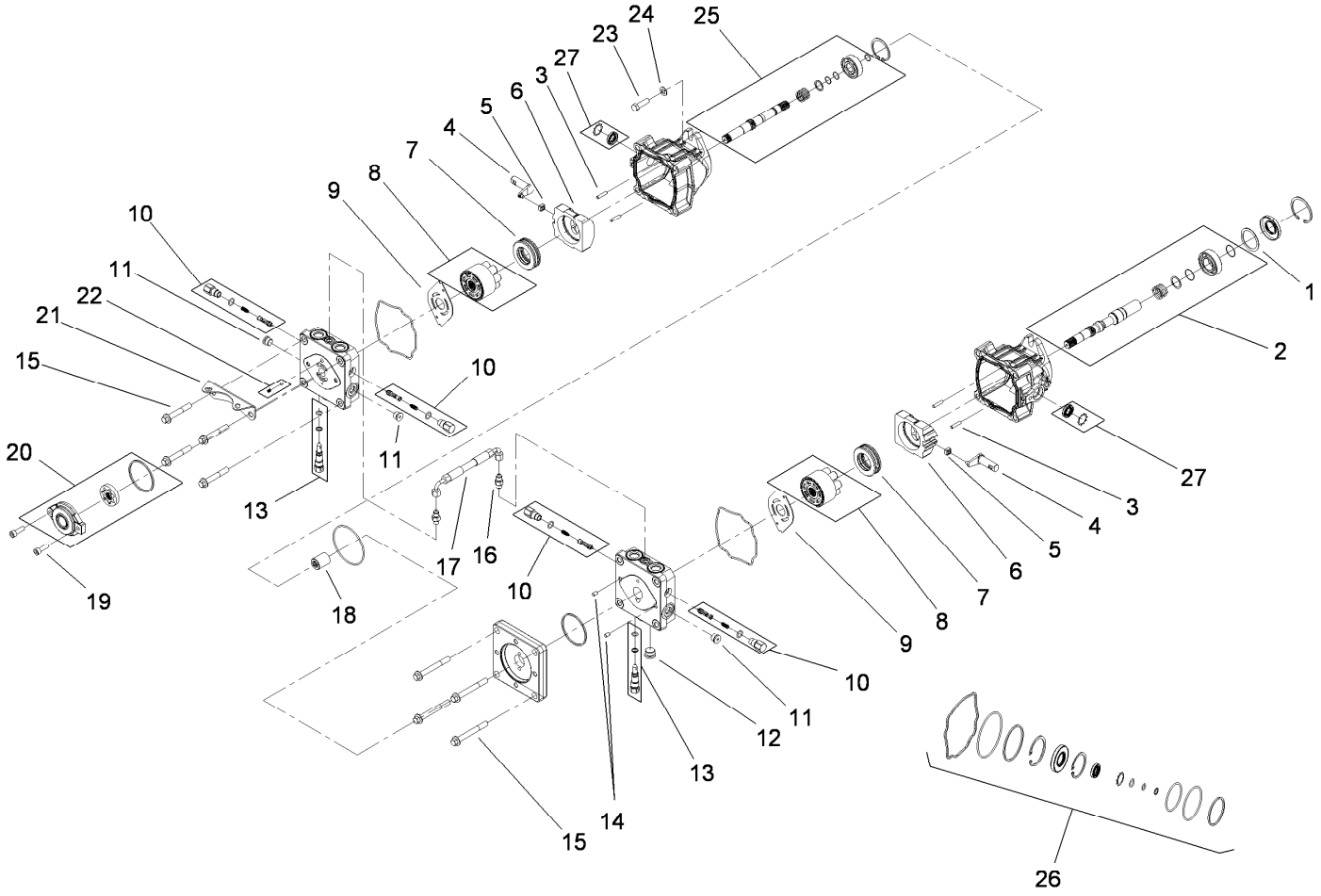

Tandem Pump Assembly No. 107-9885

Ref.	Part Number	Qty.	Description
1	112-4168	1	Spacer
2	112-4151	1	Input Pump Shaft Kit
3	106-8753	4	Pin-Headless, Straight
4	112-4152	2	Arm-Trunnion
5	94-1910	2	Guide-Slot
6	112-4153	2	Swashplate
7	112-4154	2	Bearing-Thrust
8	108-2112	2	Cylinder Block Kit
9	108-6801	2	Plate-Valve
10	112-4155	4	Shock Valve Kit
11	104-2189	3	Plug-Thread, Straight
12	112-4156	1	Plug-Steel
13	106-8759	2	Bypass Valve Kit
14	104-2170	2	Pin

Ref.	Part Number	Qty.	Description
15	112-4157	8	Bolt
16	117-7842	2	Fitting-Straight
17	117-7843	1	Hose ASM
18	112-4160	1	Coupling
19	112-4161	2	Bolt
20	112-4162	1	Charge Pump Kit
21	112-4163	1	Bracket-Support, Pump
22	112-4164	1	Charge Relief Kit
23	112-4165	2	Bolt-HSH
24	112-4166	2	Washer
25	112-4167	1	Second Pump Shaft Kit
26	112-4150	1	Overhaul Seal Kit
27	114-8155	1	Trunnion Seal Kit

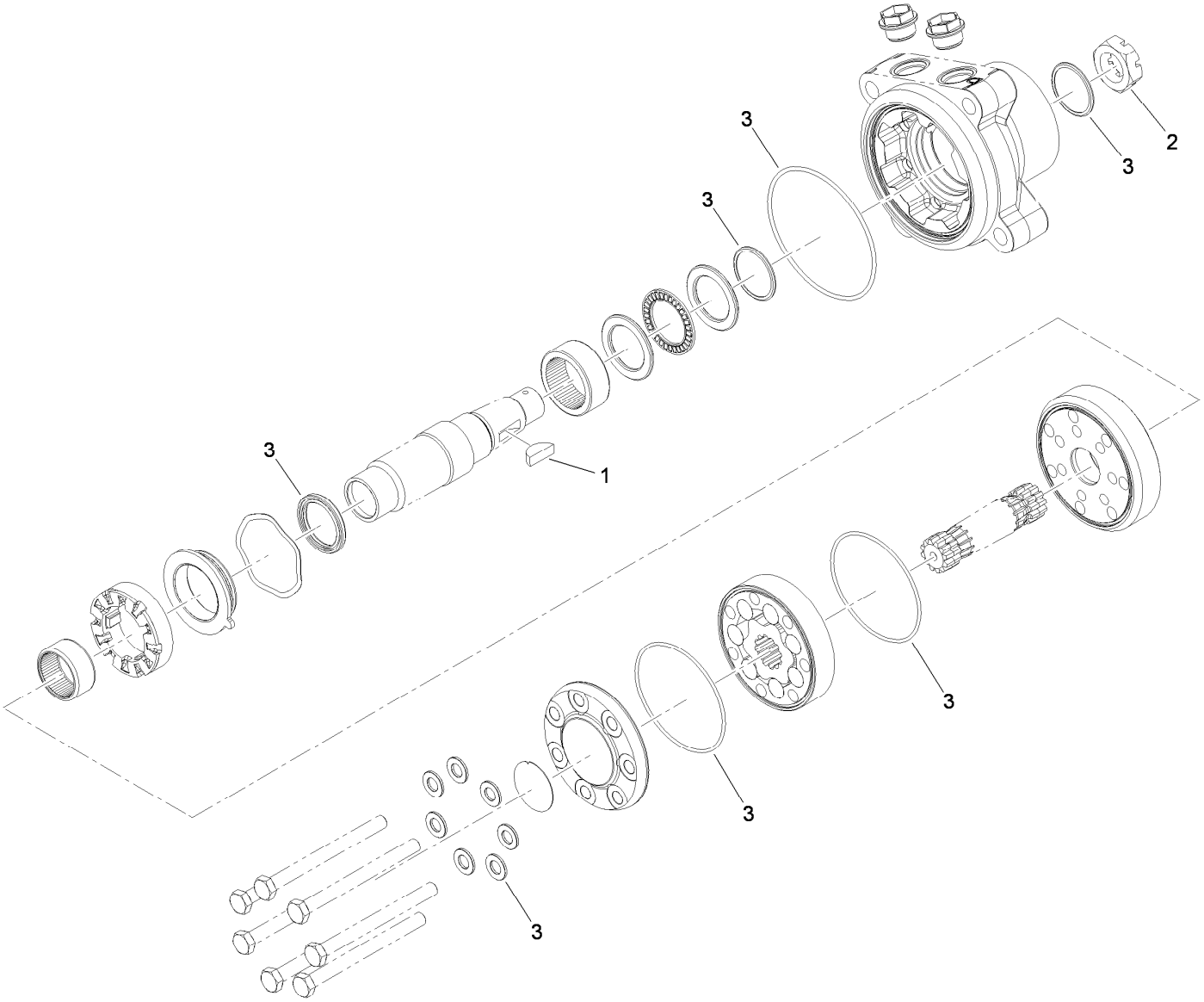

Hydraulic Motor Assembly No. 112-8357 (CCW)

Ref.	*Part Number*	*Qty.*	*Description*
1	3257-42	1	Key-Woodruff
2	1-809036	1	Nut-HH
3	109-5966	1	Wheel Motor Seal Kit

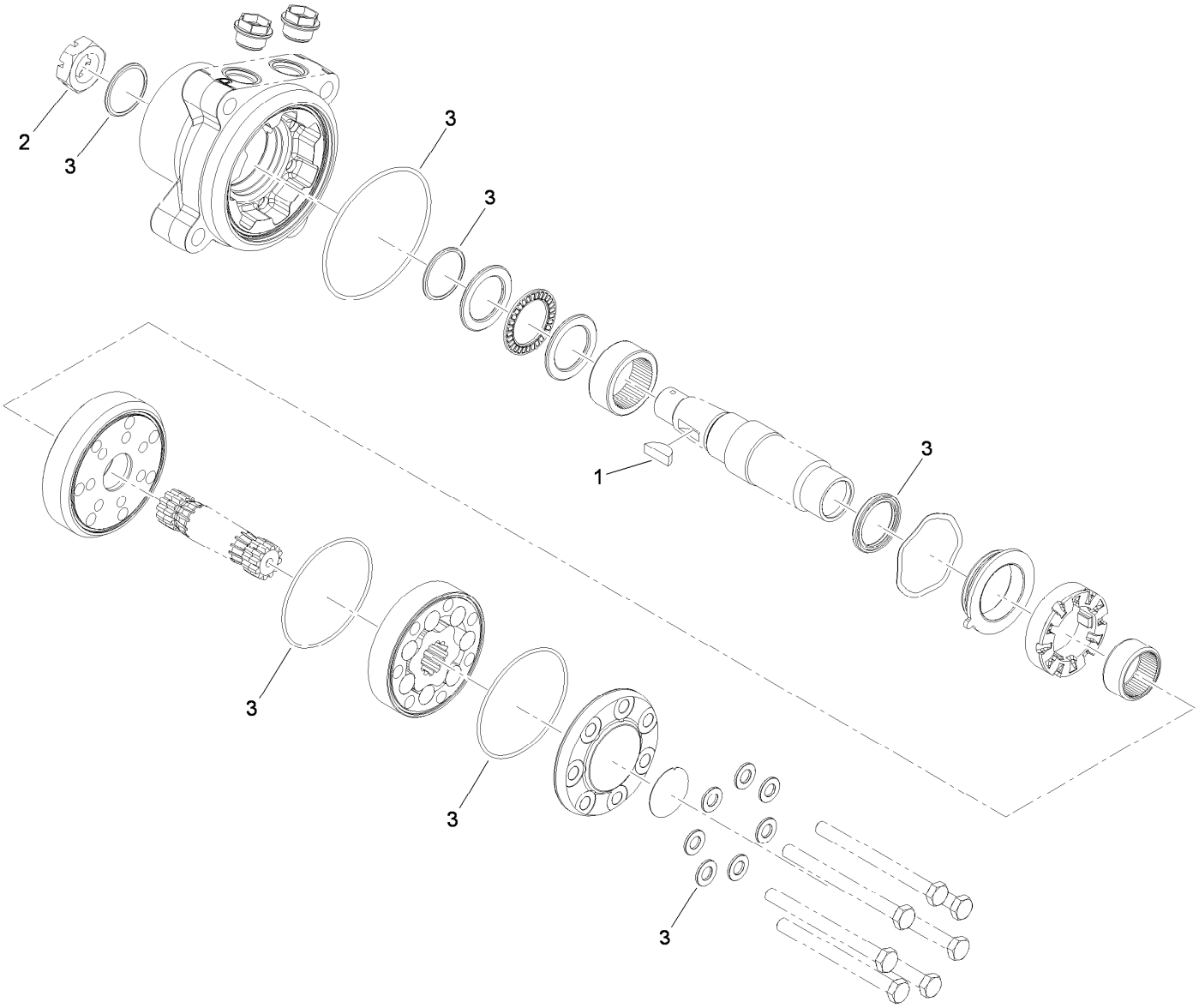

Hydraulic Motor Assembly No. 112-8358 (CW)

Ref.	*Part Number*	*Qty.*	*Description*
1	3257-42	1	Key-Woodruff
2	1-809036	1	Nut-HH
3	109-5966	1	Wheel Motor Seal Kit

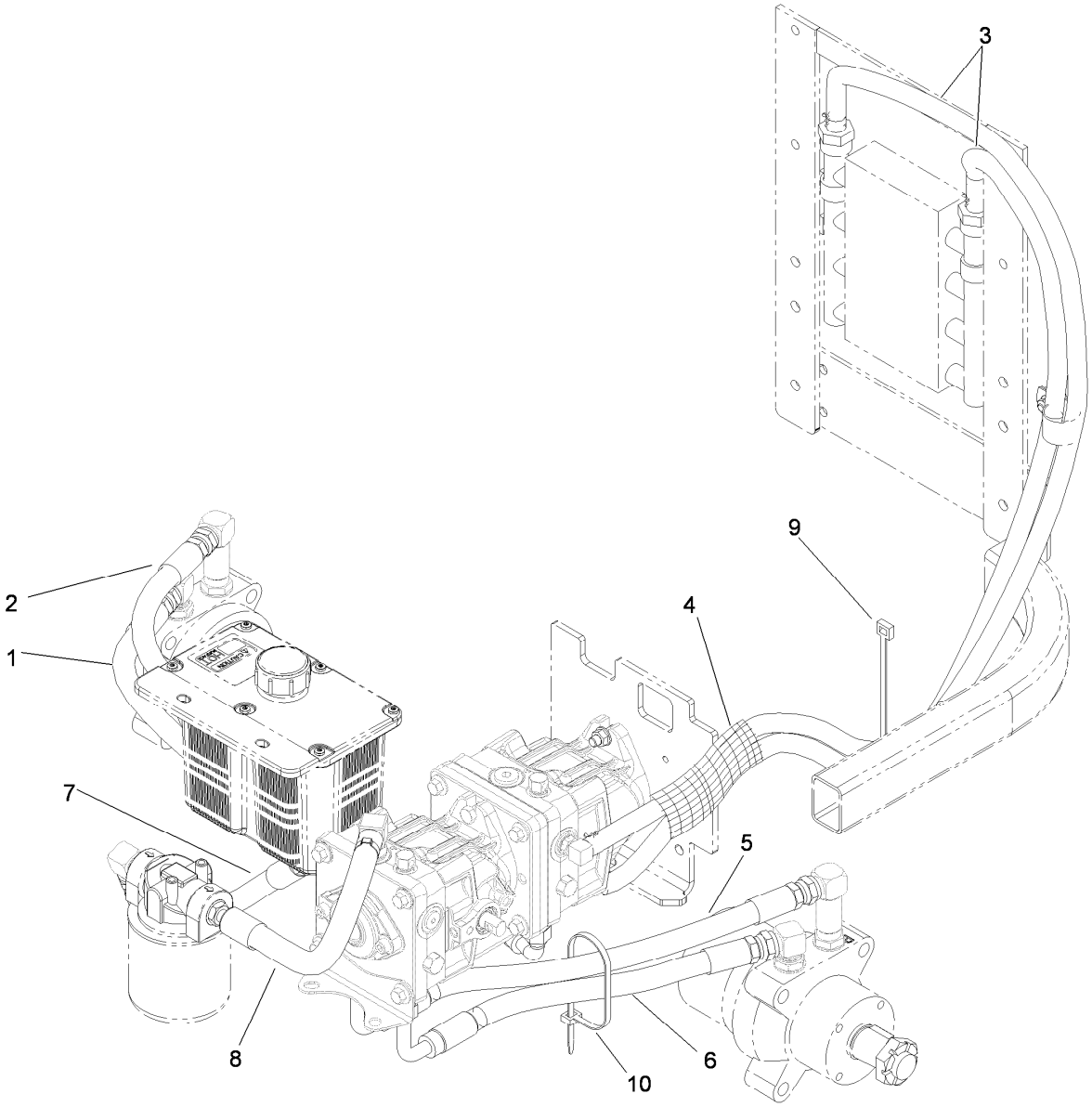

Hydraulic Hose Assembly

Ref.	*Part Number*	*Qty.*	*Description*
1	107-3495	1	Hydraulic Hose ASM
2	107-3490	1	Hydraulic Hose ASM
3	114-8169	2	Hose-Hydraulic
4	114-8201	1	Sleeve-Fabric
5	108-5318	1	Hydraulic Hose ASM
6	114-8165	1	Hydraulic Hose ASM
7	110-3854	1	Hydraulic Hose ASM
8	108-5374	1	Hydraulic Hose ASM
9	1-303335	1	Tie-Plastic
10	1-809066	1	Cable Tie-Plastic

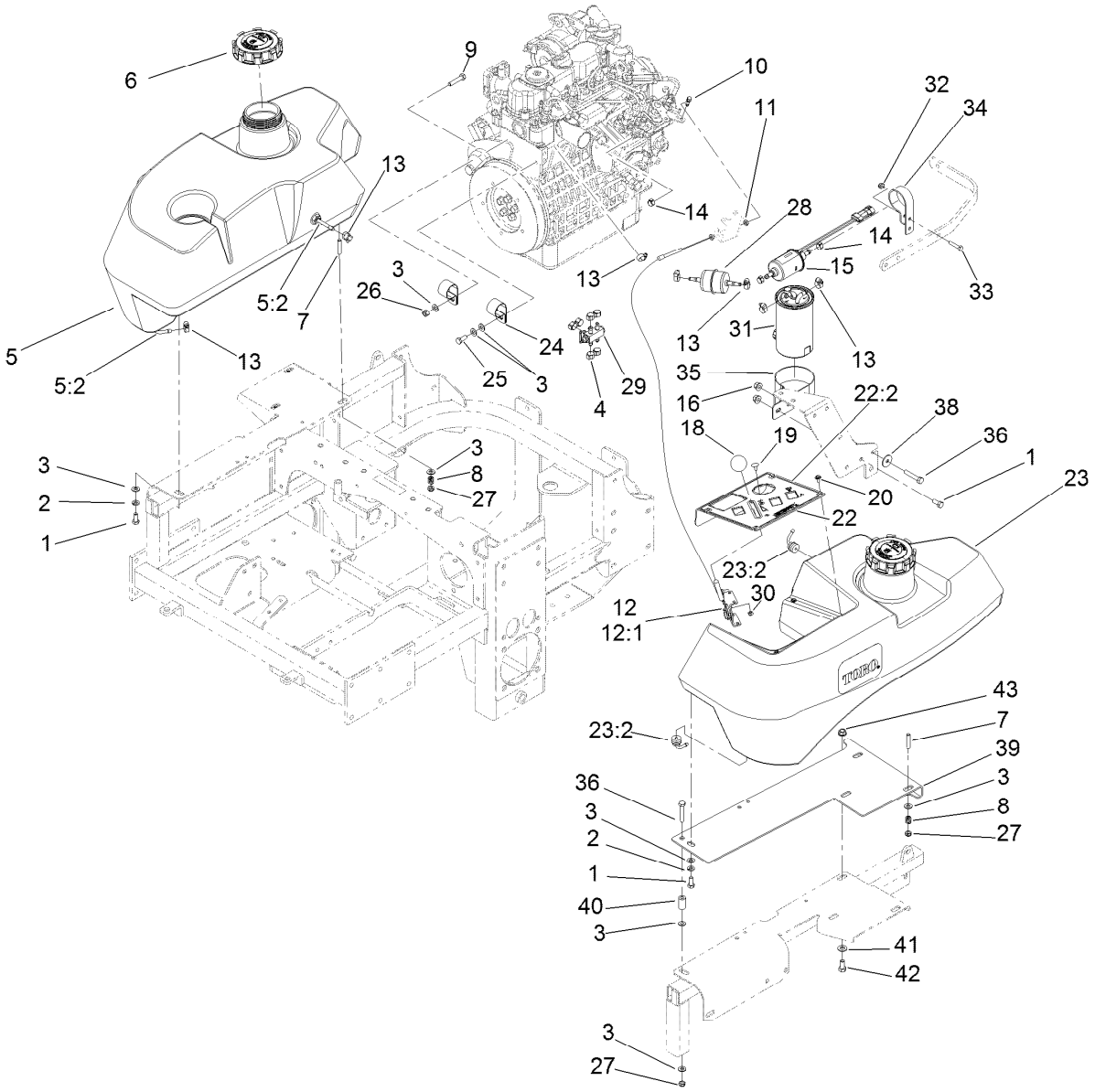

Fuel System and Throttle Control Assembly

Ref.	Part Number	Qty.	Description
1	322-3	3	Screw-HH
2	1-805005	2	Washer-Lock
3	3256-23	13	Washer-Plain
4	1-643293	6	Clamp-Hose, Fuel
5	114-8221	1	RH Fuel Tank ASM
5:2	103-2615	2	Fitting-Fuel, Bulkhead
6	114-8214	2	Biodiesel Cap ASM
7	1-633023	6	Stud
8	1-633349	6	Spring-Tank, Fuel
9	322-7	1	Screw-HH
10	108-5928	1	Swivel-Stop, Cable
11	3220-1	2	Nut-Jam
12	117-3850	1	Throttle Control ASM
12:1	112-2334	1	Lever-Throttle
13	2412-108	9	Clamp-Worm
14	1-643277	3	Clamp-Hose, Fuel
15	110-8806	1	Pump-Fuel
16	3296-58	2	Nut-Lock, NI
18	1-603175	1	Knob-Ball
19	1-807513	2	Bolt-CARR
20	109-2661	4	Screw-PPH

Ref.	Part Number	Qty.	Description
22	117-0913	1	Control Panel ASM
22:2	121-7562	1	Decal-Panel, Control
23	114-8222	1	LH Fuel Tank ASM
23:2	103-2615	2	Fitting-Fuel, Bulkhead
24	1-643312	2	Clip-Loom
25	33114-020	1	Screw-HH
26	3296-29	1	Nut-Lock, NI
27	3296-47	7	Nut-Lock, NI
28	112-7836	1	Filter-Inline
29	1-643234	1	Valve-Fuel, Dual Flow
30	3296-2	2	Nut-Lock, NI
31	112-9188	1	Element-Filter, Fuel/Water
32	104-7201	1	Nut-HF
33	321-8	1	Screw-HH
34	110-8817	1	Bracket-Pump, Fuel
35	110-8807	1	Bracket-Filter, Fuel
36	322-9	2	Screw-HH
38	3256-82	1	Washer-Flat
39	114-1545-03	1	Bracket-Fuel Tank, LH
40	94-7564	1	Spacer
41	3256-24	2	Washer-Flat

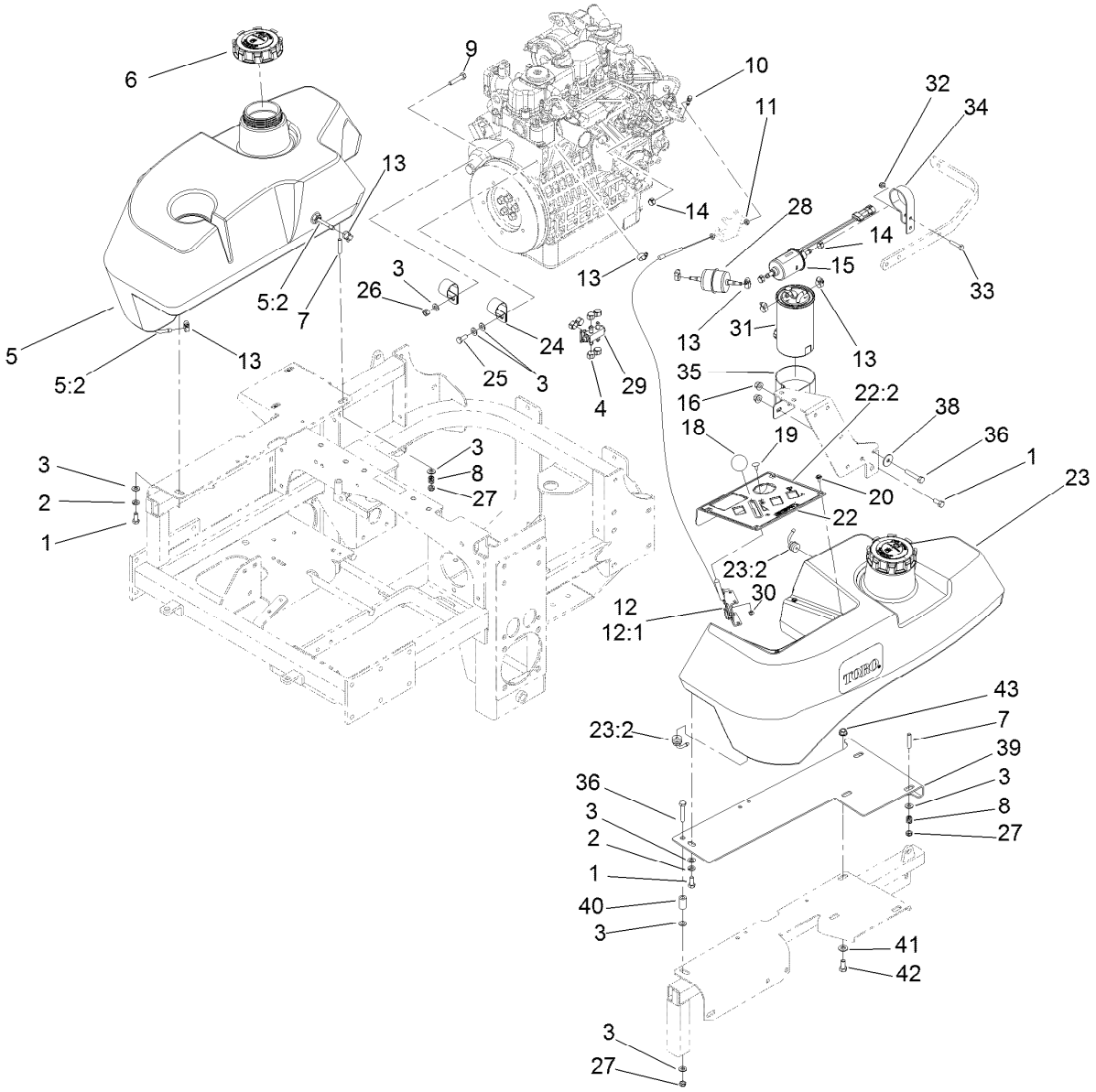

Fuel System and Throttle Control Assembly (continued)

Ref.	Part Number	Qty.	Description
42	323-4	2	Screw-HH
43	3290-357	2	Nut-HHF, Whiz

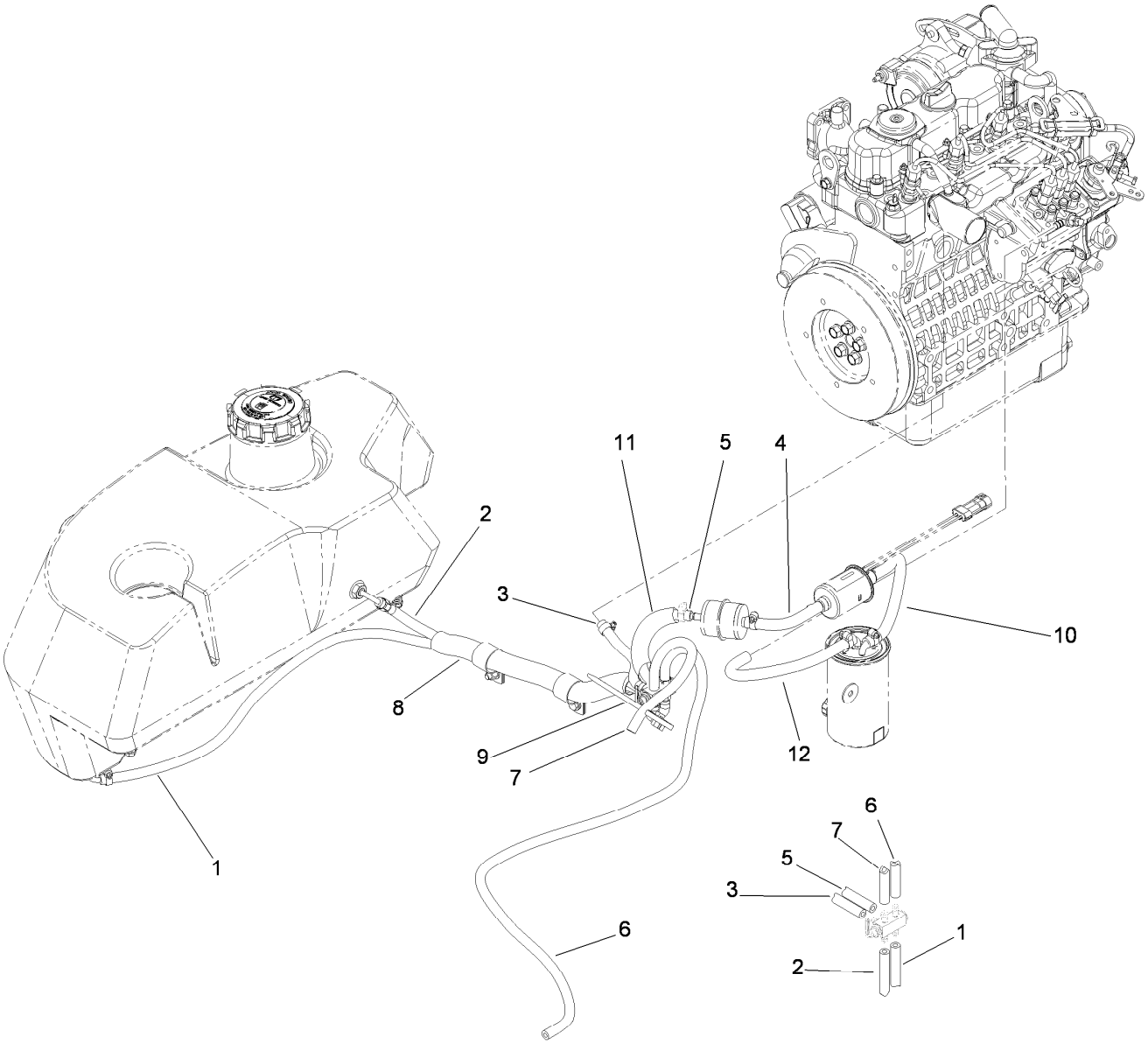

Fuel Line Assembly

Ref.	Part Number	Qty.	Description
1	108-5376	1	Hose-Fuel
2	109-0301	1	Hose-Fuel
3	109-0306	1	Hose-Fuel
4	108-3283	1	Hose-Fuel
5	109-0303	1	Hose-Fuel
6	109-0275	1	Hose-Fuel
7	109-0297	1	Hose-Fuel
8	108-5377	1	Sleeve-Fabric
9	1-303335	1	Tie-Plastic
10	110-4124	1	Hose-Fuel
11	114-8224	1	Conduit-Fuel Line
12	110-4105	1	Hose-Fuel

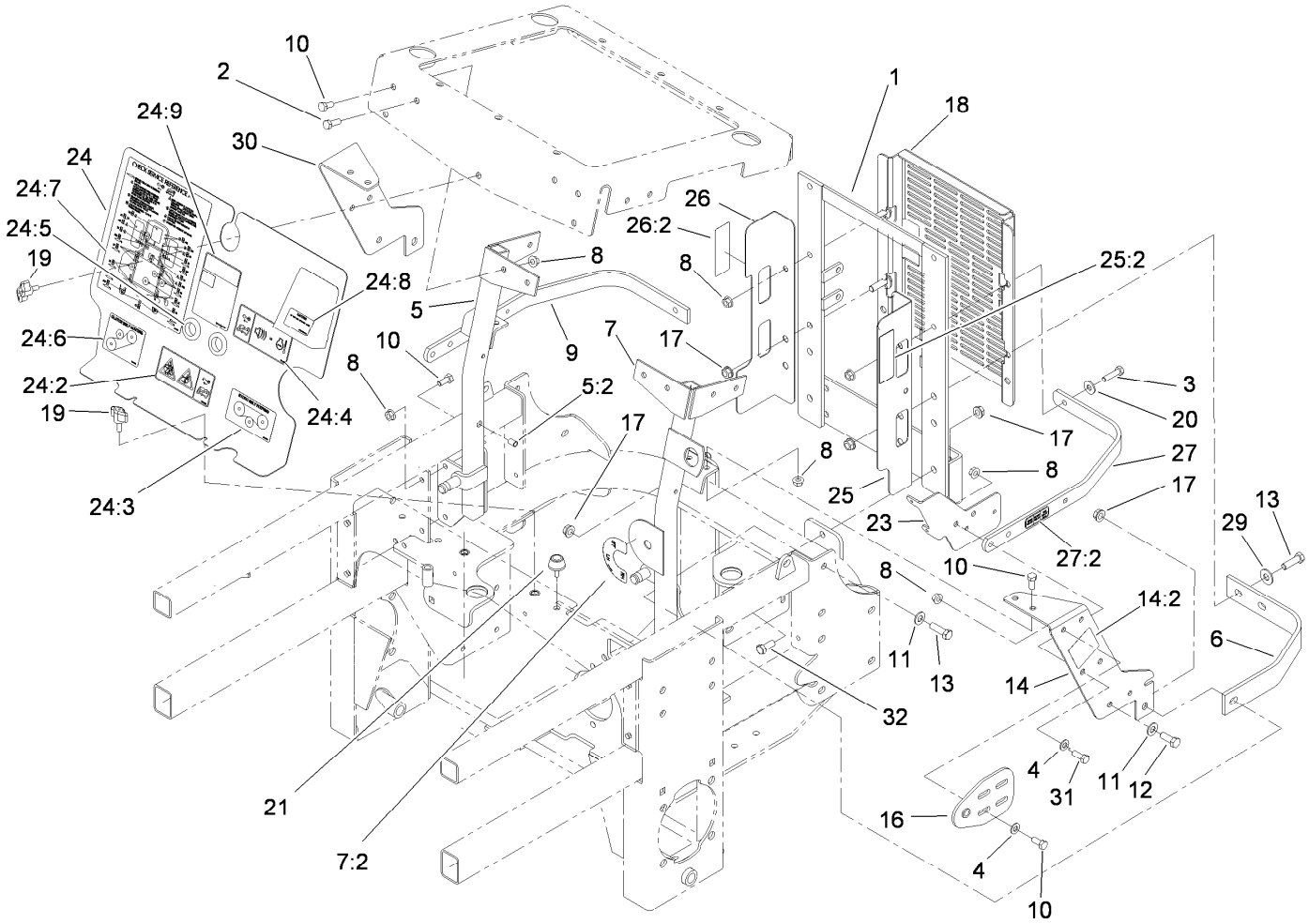

Engine Housing Assembly

Ref.	Part Number	Qty.	Description
1	107-9934-03	1	Support-Radiator, Rear
2	322-5	2	Screw-HH
3	322-6	2	Screw-HH
4	3256-23	8	Washer-Plain
5	114-1170	1	RH Radiator Brace ASM
5:2	32148-11	1	Nut-Clinch
6	103-7623-03	2	Strap-Guard
7	110-3870	1	LH Radiator Brace ASM
7:2	107-2114	1	Decal-Valve, Fuel
8	32128-20	22	Nut-HF
9	114-8223-03	1	Top-Rib
10	322-3	14	Screw-HH
11	3256-24	3	Washer-Flat
12	323-6	1	Screw-HH
13	323-7	4	Screw-HH
14	119-6650	1	LH Support Bracket ASM
14:2	119-0398	1	Decal-Fuse
16	108-5345-03	2	Plate-Pivot, Hood
17	3290-357	7	Nut-HHF, Whiz
18	112-8302-03	1	Shield-Cooler
19	98-8332	3	Knob
20	3256-3	2	Washer-Flat

Ref.	Part Number	Qty.	Description
21	109-2365	2	Bumper-Rubber
23	119-0393-03	1	Bracket-Relay, Fuse
24	108-5936	1	Front Engine Shield ASM
24:2	110-3853	1	Decal-Danger, Rotating Devices
24:3	108-5955	1	Decal-Routing, Hydro Belt
24:4	110-3852	1	Decal- Warning, Buzzer
24:5	100-3815	2	Grommet-Rubber
24:6	108-5957	1	Decal-Routing, Clutch Belt
24:7	110-3851	1	Decal-Check, Service
24:8	110-0806	1	Decal-Caution
24:9	104-2449	1	Decal-Coolant
25	110-0878	1	LH Fan Guard ASM
25:2	1-643253	1	Decal-Fan, Radiator
26	110-0887	1	RH Fan Guard ASM
26:2	1-643253	1	Decal-Fan, Radiator
27	119-0399	1	Top Strap ASM
27:2	119-0397	1	Decal-Relay
29	3256-4	2	Washer-Flat
30	108-5339-03	1	Bracket-Support, RH
31	322-4	4	Screw-HH
32	323-5	2	Screw-HH

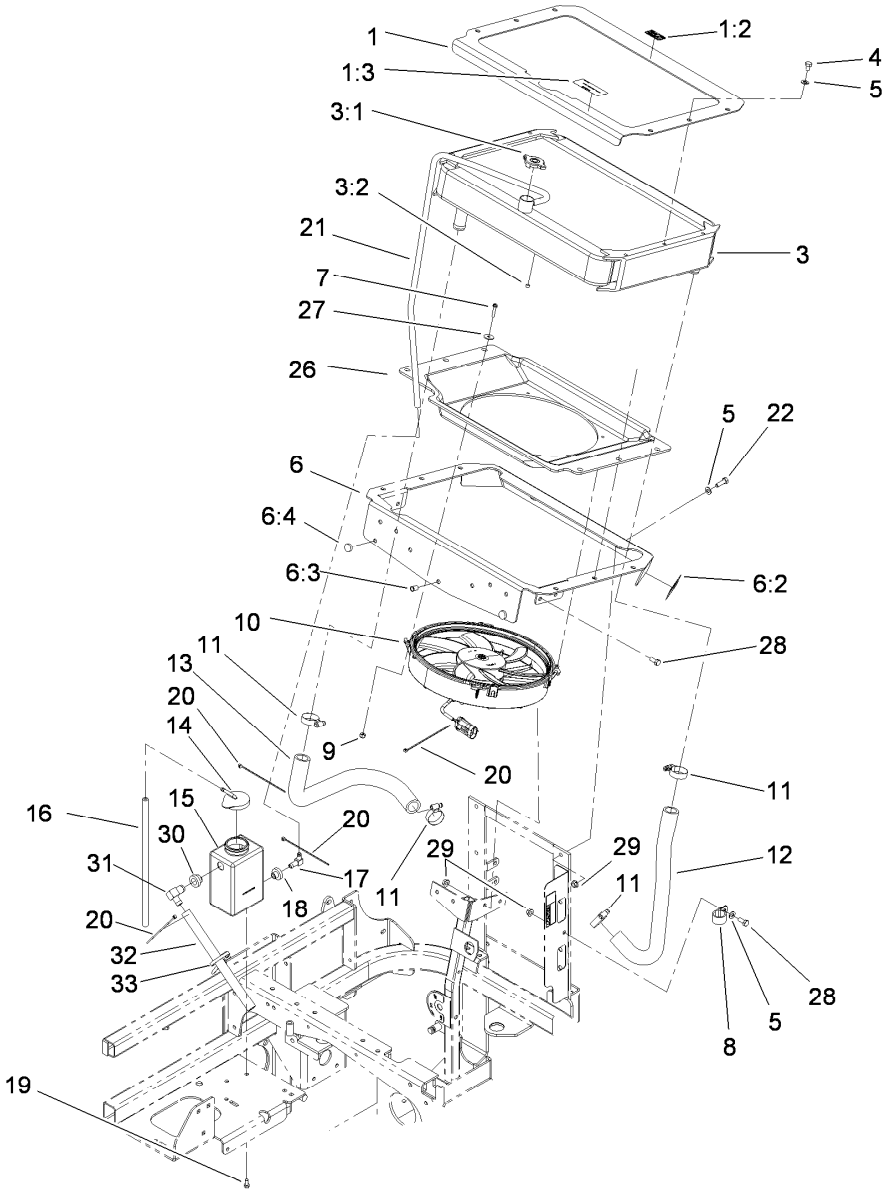

Cooling System Assembly

Ref.	Part Number	Qty.	Description
1	112-8305	1	Top Radiator Plate ASM
1:2	65-2690	1	Decal-Surface, Hot
1:3	110-3842	1	Decal-Antifreeze
3	108-5382	1	Radiator ASM
3:1	114-8202	1	Cap-Radiator
3:2	99-8551	1	Plug-Pipe
4	322-1	6	Screw-HH
5	3256-23	16	Washer-Plain
6	112-8306	1	Bottom Rad Plate ASM
6:2	1-643253	2	Decal-Fan, Radiator
6:3	32148-6	1	Nut-Clinch
6:4	1-513658	2	Bumper
7	1-803067	4	Screw
8	1-643312	1	Clip-Loom
9	1-804254	4	Nut-Lock, HH
10	112-4172	1	Fan-Hi Performance
11	1-633989	4	Clamp-Hose
12	108-5372	1	Hose-Radiator, LH
13	112-8314	1	Hose-Radiator, RH
14	1-643164	1	Cap-Tank, Overflow
15	117-0941	1	Tank-Overflow
16	1-603954	1	Hose-Line, Fuel
17	1-643259	1	Fitting-Elbow
18	1-513645	1	Bushing-Valve, Fuel
19	321-2	2	Screw-HH
20	1-303287	6	Tie-Cable
21	103-1428	1	Hose-Overflow
22	322-5	3	Screw-HH
26	112-8317	1	Shroud
27	3256-67	4	Washer
28	322-3	10	Screw-HH
29	32128-20	3	Nut-HF
30	104-0790	1	Bushing
31	117-0943	1	Fitting-Elbow
32	115-4969	1	Hose-Overflow
33	1-303335	1	Tie-Plastic

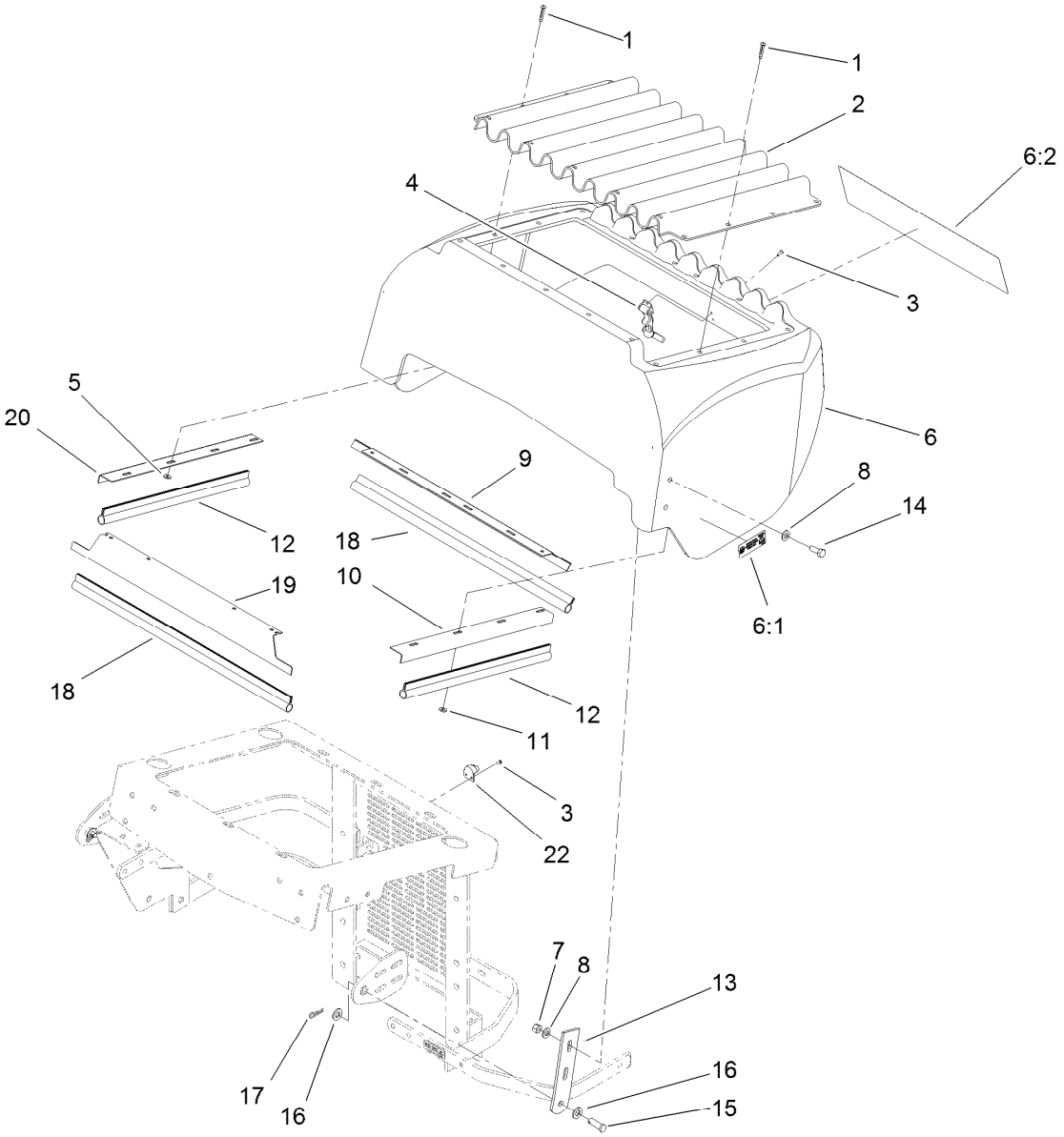

Hood Assembly

Ref.	Part Number	Qty.	Description
1	1-803072	17	Rivet
2	1-633864-03	1	Screen-Radiator
3	923786	4	Rivet
4	1-643188	1	Latch-Rubber
5	1-303435	4	Washer-Spring
6	114-8225	1	Hood ASM
6:1	114-9600	2	Decal-Low Sulfur
6:2	121-7558	1	Decal
7	3296-29	4	Nut-Lock, NI
8	3256-23	8	Washer-Plain
9	1-643108-03	1	Angle-Radiator, Bottom
10	1-643105-03	1	Angle-Radiator, LH
11	3256-14	12	Washer-Flat
12	1-643186	2	Seal-Trim
13	108-5337-03	2	Plate-Hinge, Hood
14	322-4	4	Screw-HH
15	1-808285	2	Pin-Clevis
16	3256-24	4	Washer-Flat
17	1-806003	2	Pin-Cotter
18	1-643187	2	Seal-Trim
19	117-6166-03	1	Bracket Seal, Radiator Front
20	1-643106-03	1	Angle-Radiator, RH
22	1-643189	1	Keeper-Latch, Rubber

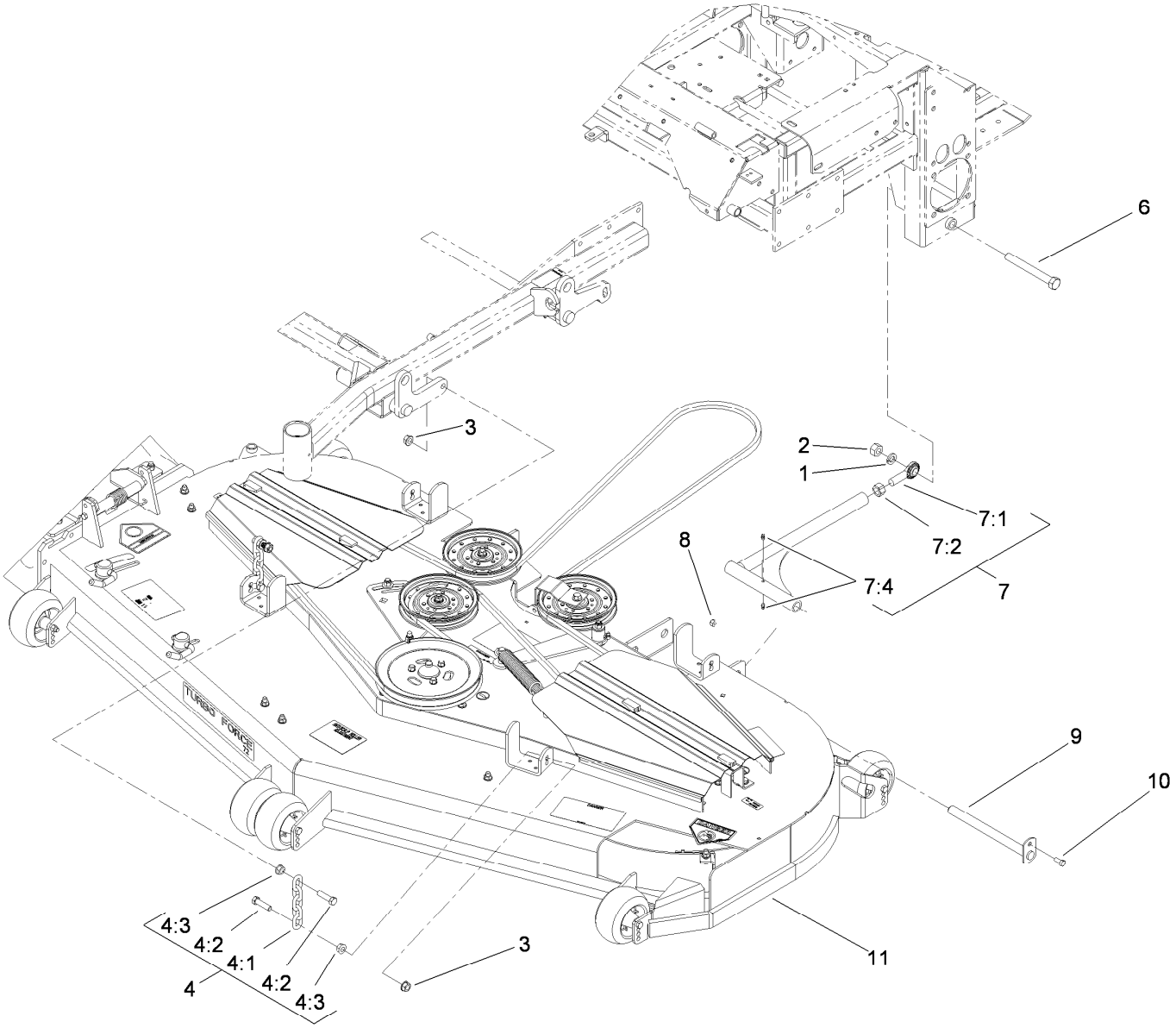

Deck Connection Assembly

Ref.	Part Number	Qty.	Description
1	3253-8	2	Washer-Lock
2	3217-11	2	Nut-Hex
3	32128-37	8	Nut-HF
4	103-9792	4	Deck Chain ASM
4:1	1-633447	1	Chain-Lift, Deck
4:2	103-1898	2	Screw-HH
4:3	32128-37	2	Nut-HF
6	327-28	2	Screw-HH

Ref.	Part Number	Qty.	Description
7	108-5969	2	Strut ASM
7:1	1-633029	1	Balljoint-Spherical
7:2	3219-6	1	Nut-Hex
7:4	109-1380	1	Fitting-Grease
8	3296-29	2	Nut-Lock, NI
9	1-632199-01	2	Pin-Strut
10	322-3	2	Screw-HH
11		1	Deck ASM ●

● Not serviced separately

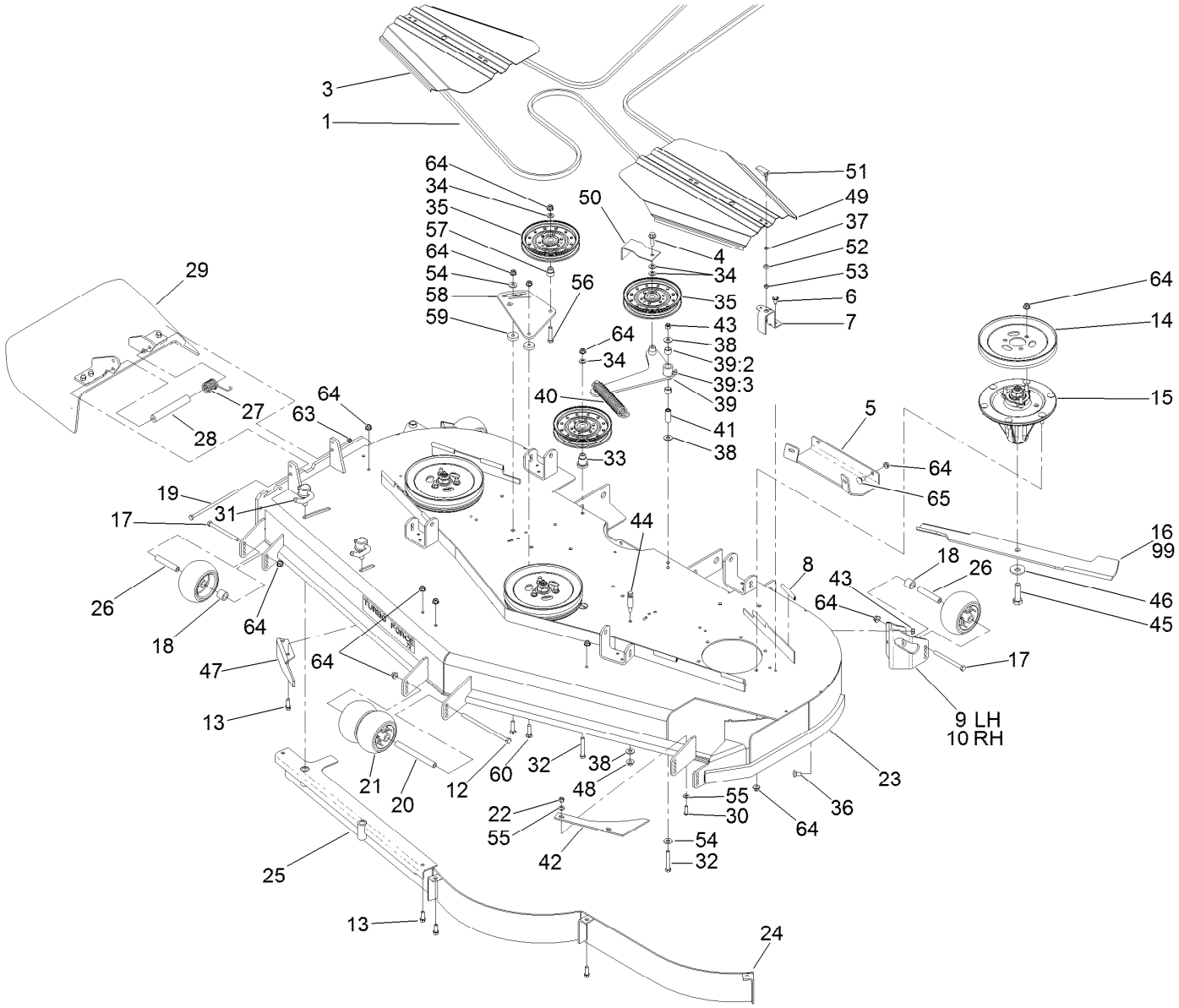

Deck Assembly

Ref.	Part Number	Qty.	Description
1	105-7790	1	Belt
3	112-8667-03	1	Cover-Belt, RH
4	3234-24	1	Screw-HHF
5	106-3279-01	1	Plate-Skid
6	32144-70	4	Screw-HWHTF
7	119-4220-01	4	Bracket-Cover
8	105-7699	8	Strip-Seal
9	106-7354-01	1	Mount-Wheel, LH
10	106-7355-01	1	Mount-Wheel, RH
12	108-5388	1	Screw-HH
13	92-1624	6	Screw-HWH
14	105-7733	3	Pulley
15	119-8500	3	Spindle ASM
16	105-7784-03	3	Blade-Hi Flow, 24.5 Inch
17	323-23	4	Screw-HH
18	98-7913	4	Tube-Spacer
19	322-50	1	Screw-HH
20	98-5967	1	Spacer-Wheel
21	1-603299	6	Roller-Scalp, Anti
22	3296-29	2	Nut-Lock, NI
23	114-4483	1	Deck Decal ASM

Ref.	Part Number	Qty.	Description
24	105-7730-01	1	Baffle
25	105-7669-01	1	Baffle
26	98-7912	4	Tube-Spanner
27	108-4052	1	Spring-Torsion
28	105-4622	1	Spacer
29	108-2792	1	Rubber Deflector ASM
30	3274-104	2	Screw-HSBH
31	107-1664	2	Lever ASM
32	323-12	2	Screw-HH
33	106-3214	1	Mount-Pulley
34	3256-24	4	Washer-Flat
35	116-4667	3	Idler-Pulley, Flat
36	3231-1	6	Screw-CARR
37	99-3058	4	Washer
38	3256-4	3	Washer-Flat
39	108-5949	1	Deck Idler Arm ASM
39:2	103-4681	2	Sleeve-Bearing
39:3	302-40	1	Fitting-Grease, 90 DEG
40	119-0392	1	Spring-Extension
41	1-603044	1	Bushing
42	107-3138	1	Plate-Turbo

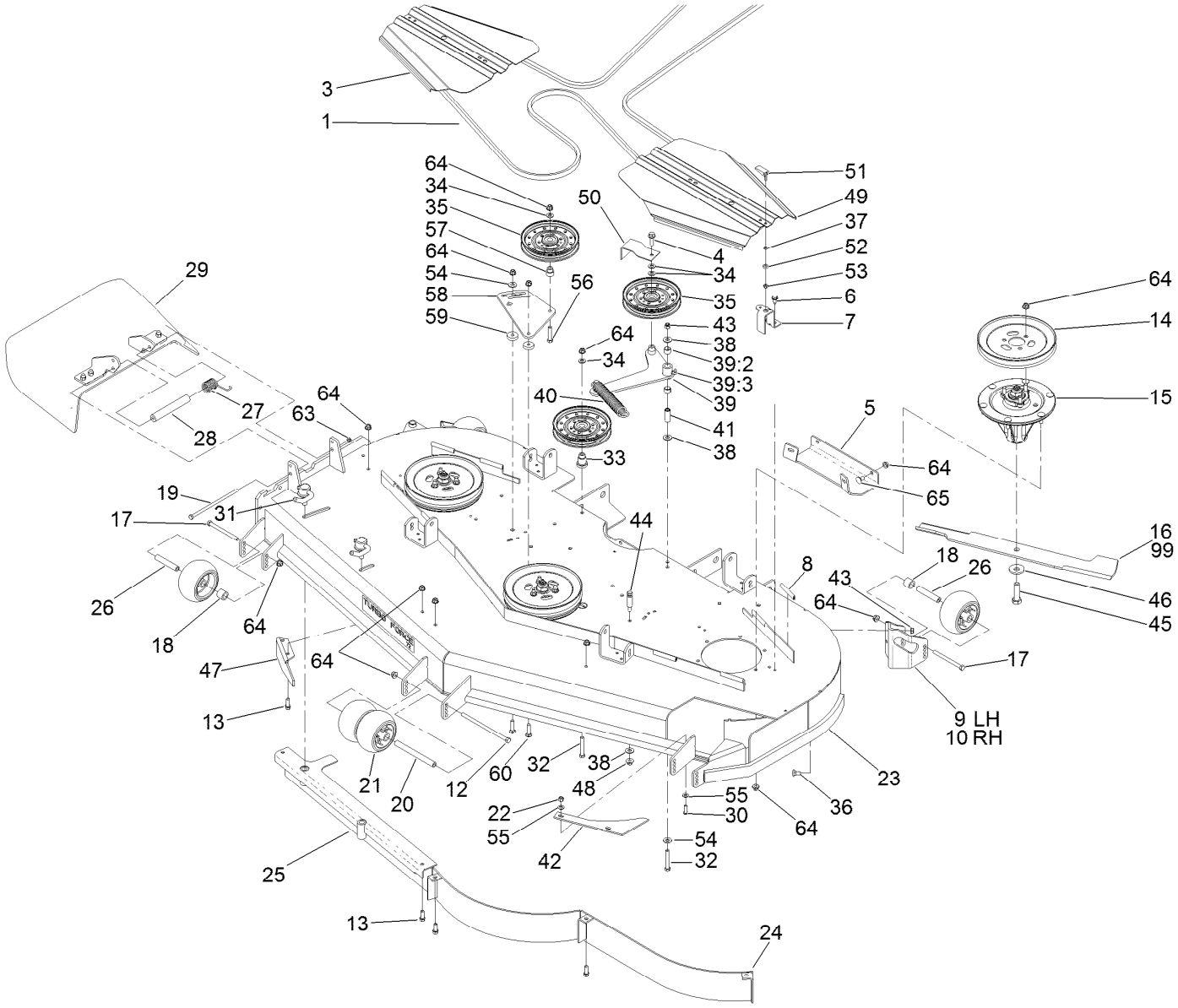

Deck Assembly (continued)

Ref.	Part Number	Qty.	Description
43	3296-59	6	Nut-Lock, NI
44	110-0801	1	Pin-Threaded, Spring Anchor
45	51-4060	3	Screw-Blade
46	103-0865	3	Washer-Blade Bolt, Heavy
47	106-3216-01	1	Baffle-Discharge
48	32128-19	1	Nut-HF
49	112-8666-03	1	Cover-Belt, LH
50	108-7220-01	1	Guide-Belt
51	106-6777	4	Handle-Latch, Swell
52	106-6778	4	Bushing-Latch, Swell
53	1-804254	4	Nut-Lock, HH
54	98-5975	2	Washer-Belleville

Ref.	Part Number	Qty.	Description
55	1-303334	4	Washer-Spring
56	323-9	1	Screw-HH
57	1-603496	1	Bushing-Idler
58	105-7787-01	1	Plate-Idler
59	105-7788	2	Spacer
60	3231-4	2	Screw-CARR
63	3296-47	1	Nut-Lock, NI
64	104-8301	47	Nut-HF, NI
65	3231-27	4	Screw-CARR
99	105-7711-03	3	Blade-Mid Flow, 24.5In
99	105-7778-03	3	Blade-Recycler, 24.5In
99	105-7719-03	3	Blade-Atomic, 24.5In
99	105-7712-03	3	Blade-Lo Flow, 24.5In

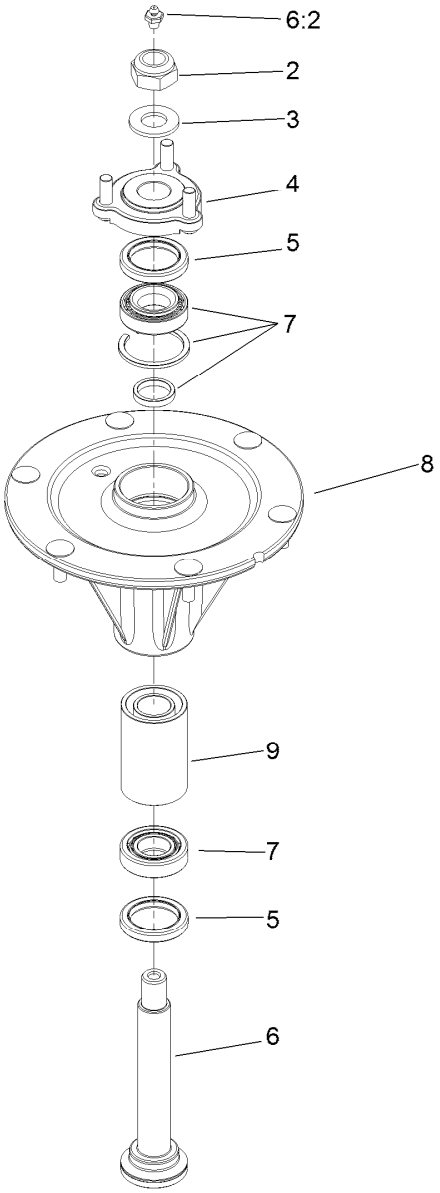

Spindle Assembly No. 119-8500

Ref.	Part Number	Qty.	Description
2	3296-67	1	Nut-Lock, NI
3	92-5836	1	Washer
4	117-6172	1	Spindle Hub ASM
5	253-133	2	Seal-Oil
6	119-8527	1	Shaft-Spindle
6:2	302-2	1	Fitting-Grease
7	119-8531	1	Tapered Roller Bearing Set
8		1	Housing-Spindle ●
9	117-6185	1	Spacer Set

● Not serviced separately

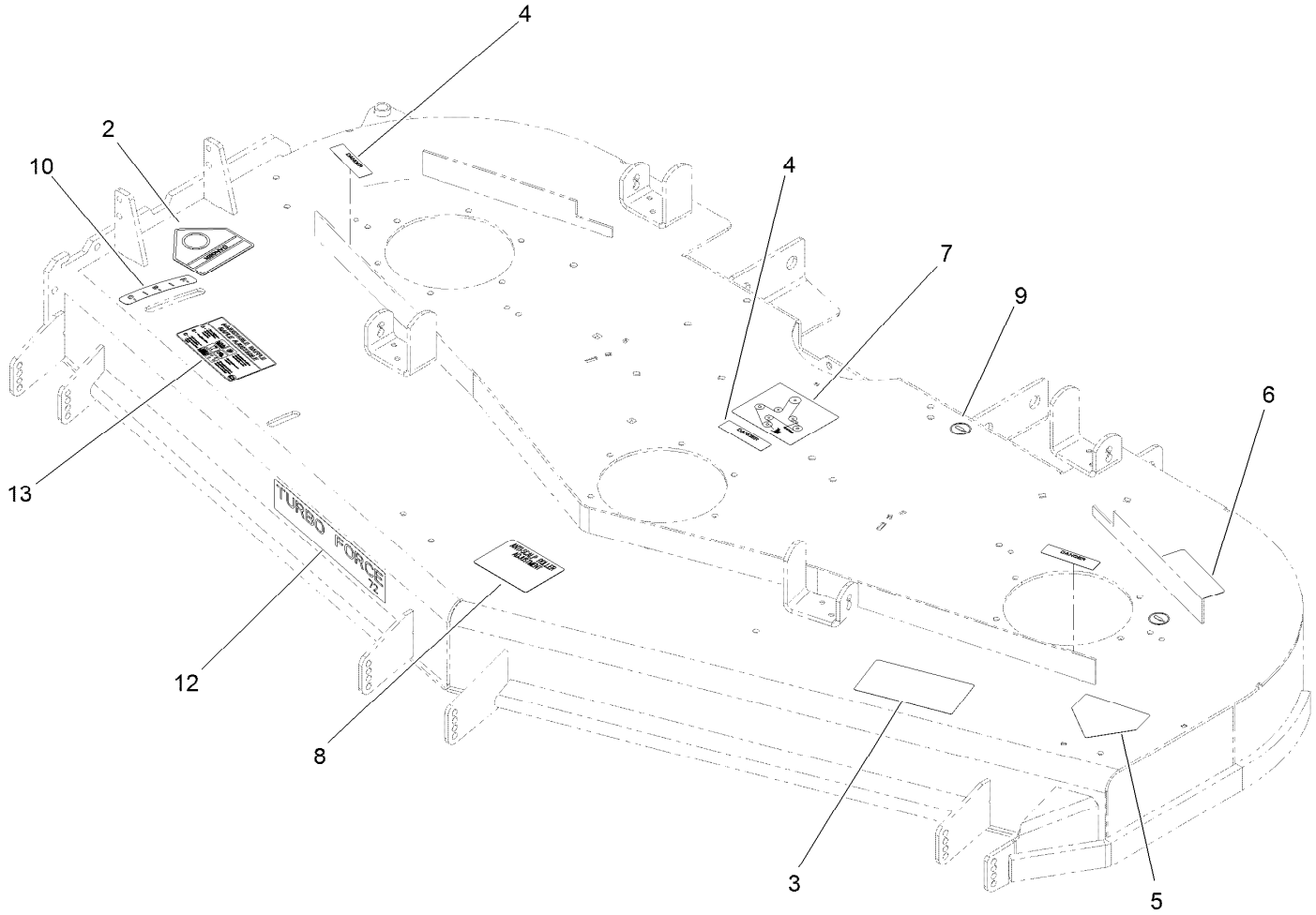

Deck Decal Assembly No. 114-4483

Ref.	Part Number	Qty.	Description
2	54-9220	1	Decal-Danger
3	66-1340	1	Decal-Danger, Thrown Object
4	98-5954	3	Decal-Cover, Missing
5	1-403005	1	Decal-Danger
6	68-8340	1	Decal-Torque
7	108-5981	1	Decal-Routing, Belt
8	105-7798	1	Decal-Scalp, Anti
9	58-6520	1	Decal-Grease
10	110-2067	1	Decal-Setting, Baffle
12	107-1620	1	Decal
13	110-2068	1	Decal-Adjustment, Baffle

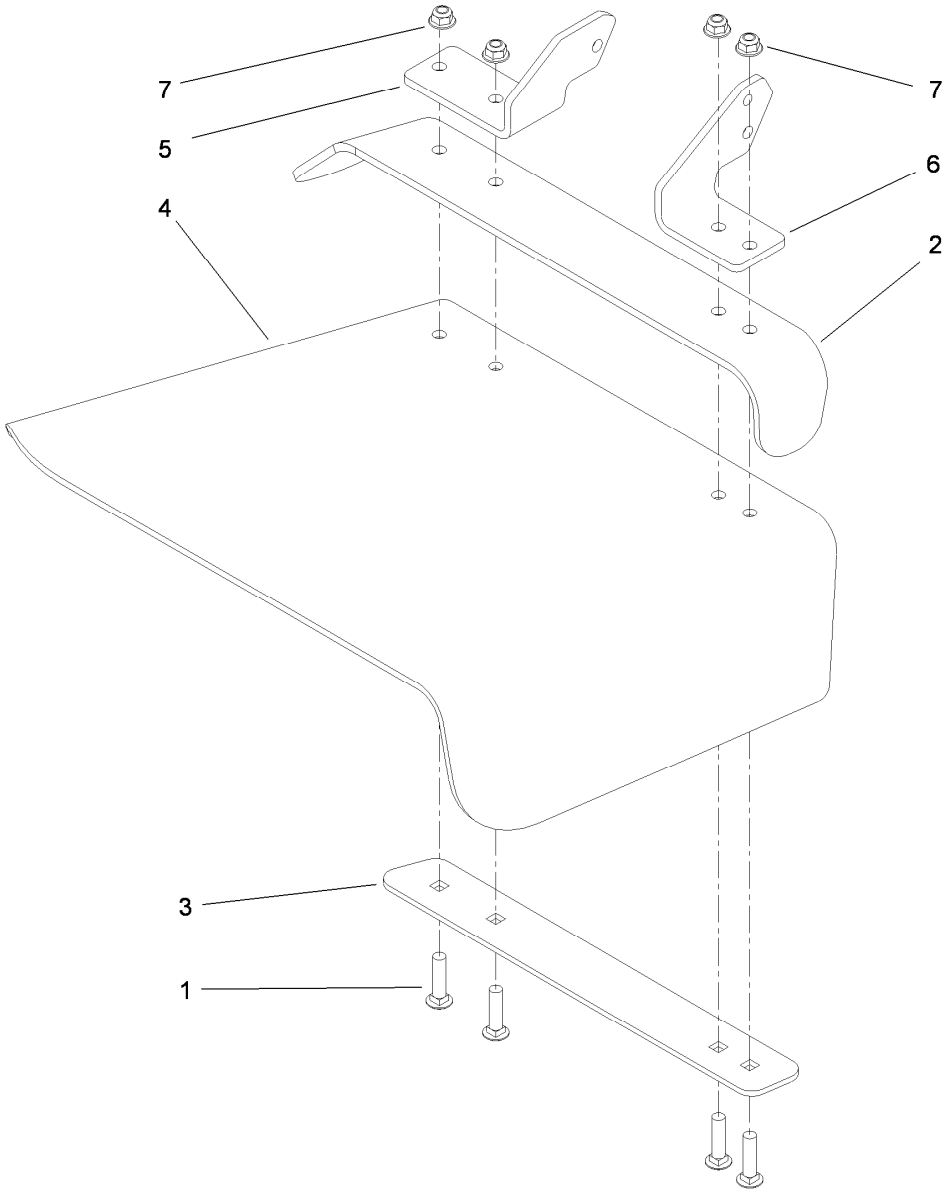

Rubber Deflector Assembly No. 108-2792

Ref.	Part Number	Qty.	Description
1	3231-4	4	Screw-CARR
2	106-3246-01	1	Deflector
3	106-3248-03	1	Strap-Discharge
4	108-5029	1	Deflector-Rubber
5	108-4059-01	1	Plate-Hinge, Rear
6	106-3253-01	1	Plate-Hinge, Front
7	104-8301	4	Nut-HF, NI

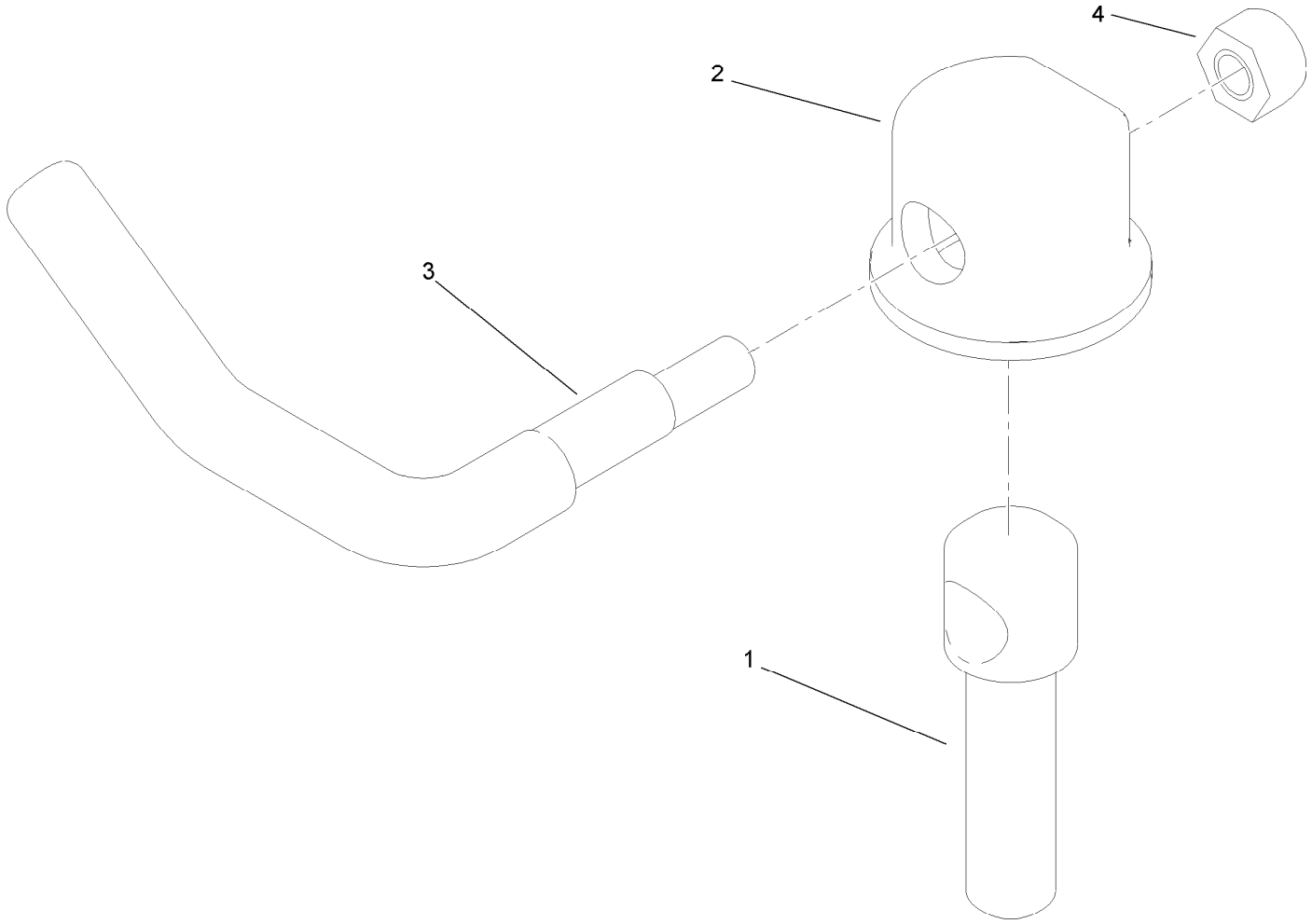

Lever Assembly No. 107-1664

Ref.	*Part Number*	*Qty.*	*Description*
1	106-3239	1	Screw-Lock
2	107-1644	1	Cap-Lock
3	106-3241	1	Lever-Lock
4	3296-29	1	Nut-Lock, NI

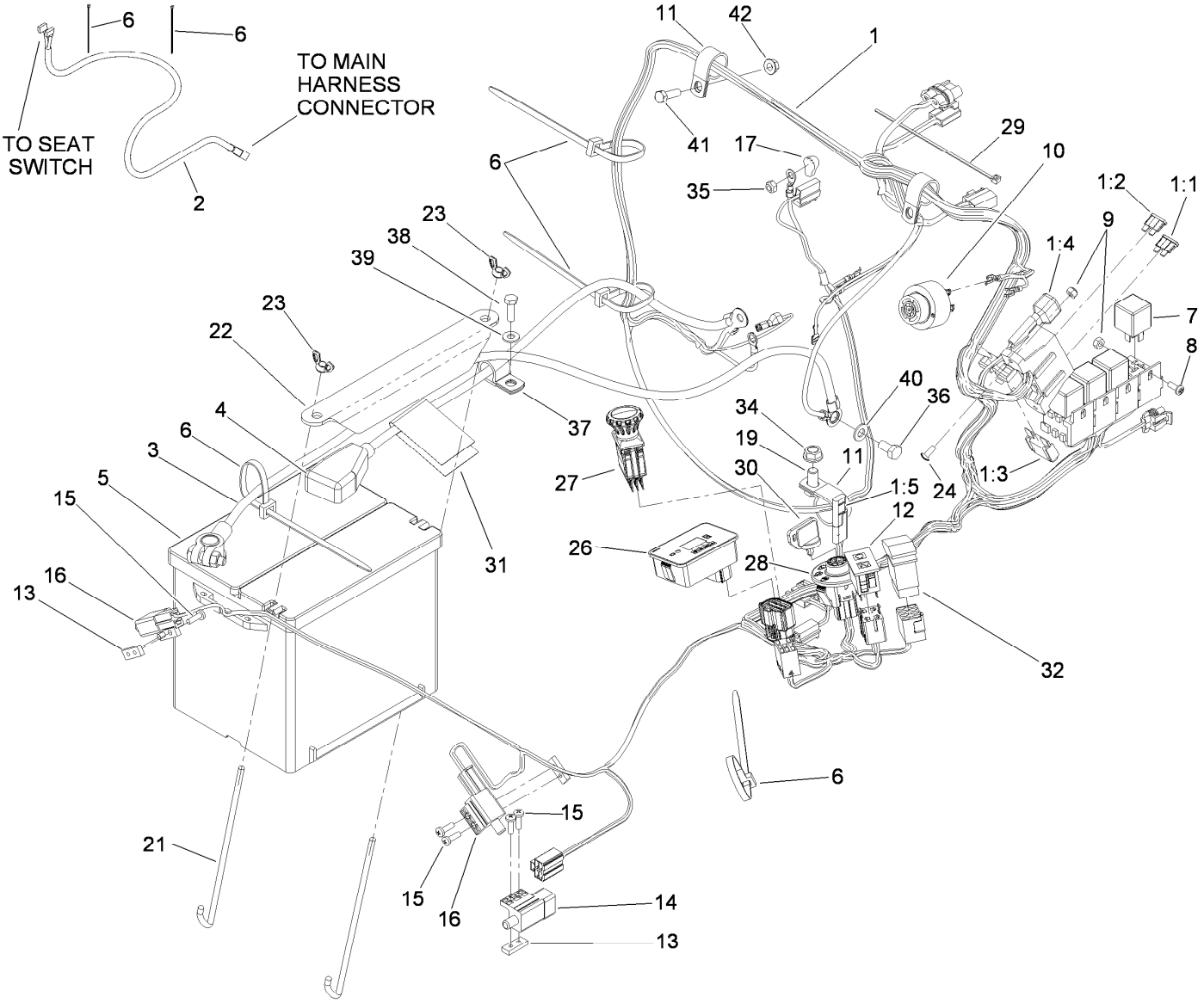

Electrical Assembly

Ref.	Part Number	Qty.	Description
1	119-0351	1	Harness-Wire
1:1	218-578	1	Fuse-Blade, 10 Amp
1:2	109103	1	Fuse-Blade, 30 Amp
1:3	94-8002	1	Fuse-Blade, 50 Amp
1:4	100-4918	1	Diode
1:5	116-0053	1	Cap-Plug
2	103-1227	1	Harness-Wiring, Seat
3	110-0303	1	Cable-Battery, Negative
4	110-0304	1	Cable-Battery, Positive
5	106-5187	1	Battery-Dry
6	1-303335	7	Tie-Plastic
7	1-643275	4	Relay
8	1-803071	2	Screw
9	3296-2	4	Nut-Lock, NI
10	103-0205	1	Alarm-Tone, Dual
11	1-643312	3	Clip-Loom
12	100-8071	1	Lamp-Warning
13	1-633181	3	Plate-Tapped
14	1-633111	1	Switch
15	3290-500	6	Screw-PPH
16	1-513051	2	Switch-Open, Normally

Ref.	Part Number	Qty.	Description
17	1-643178	1	Cap-Insulator, Red
19	323-4	1	Screw-HH
21	103-1312	2	Bolt-Holddown
22	103-1311-03	1	Holddown-Battery
23	1-543792	2	Wingnut
24	1-803075	2	Screw-Head, Truss
26	117-3884	1	Module ASM
27	116-0124	1	Switch-PTO, 10 Amp
28	117-2221	1	Switch-Ignition
29	1-303287	1	Tie-Cable
30	63-8360	2	Key-Ignition
31	107-9309	1	Decal-Instructions, Charging
32	110-0811	1	Switch-Rocker
34	3290-357	1	Nut-HHF, Whiz
35	33023-00	1	Nut-Lock
36	33114-016	1	Screw-HH
37	1-633396	2	Clip-Loom
38	321-5	2	Screw-HH
39	3256-22	2	Washer-Flat
40	3256-23	1	Washer-Plain

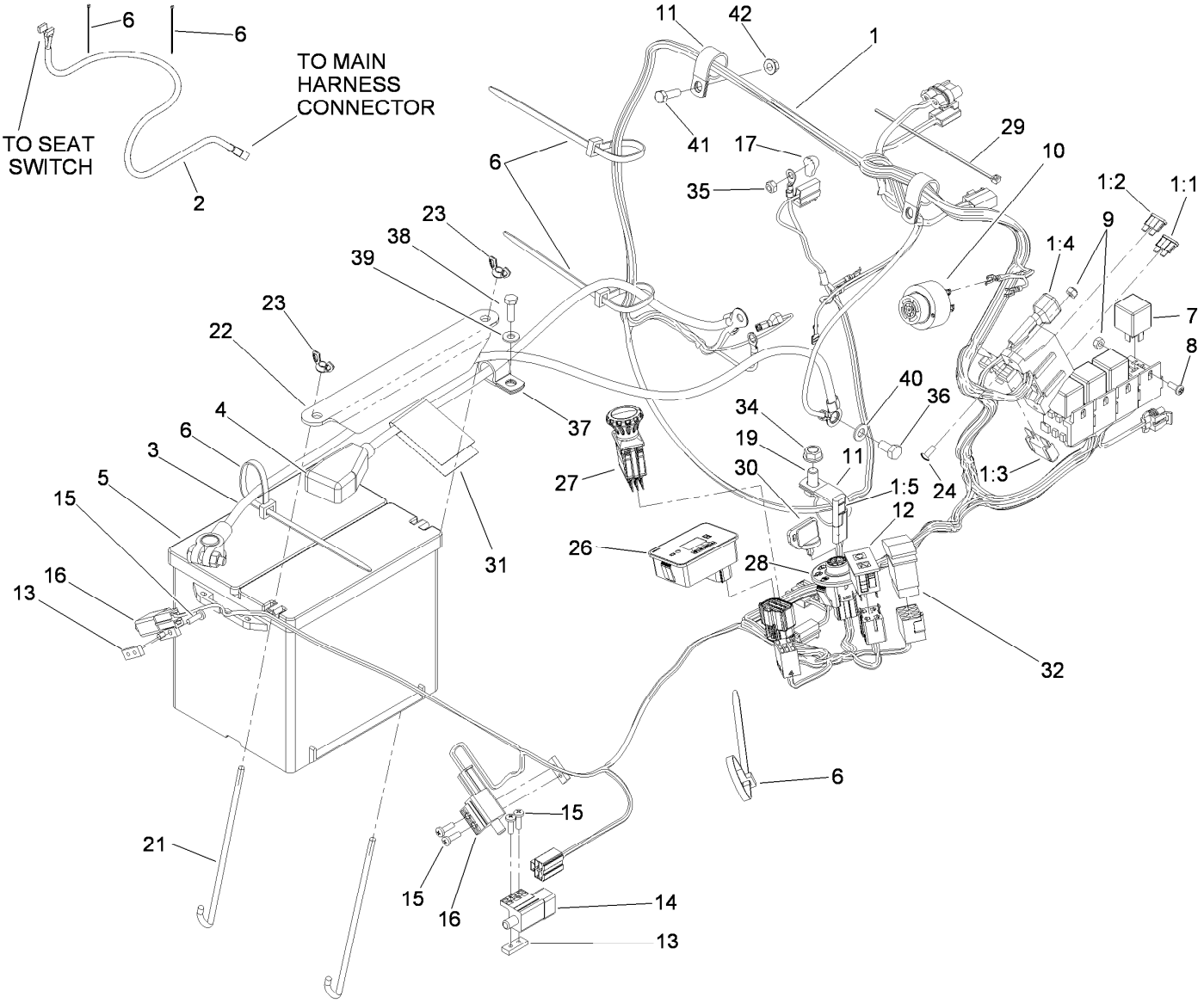

Electrical Assembly (continued)

Ref.	Part Number	Qty.	Description
41	322-5	2	Screw-HH
42	32128-20	2	Nut-HF

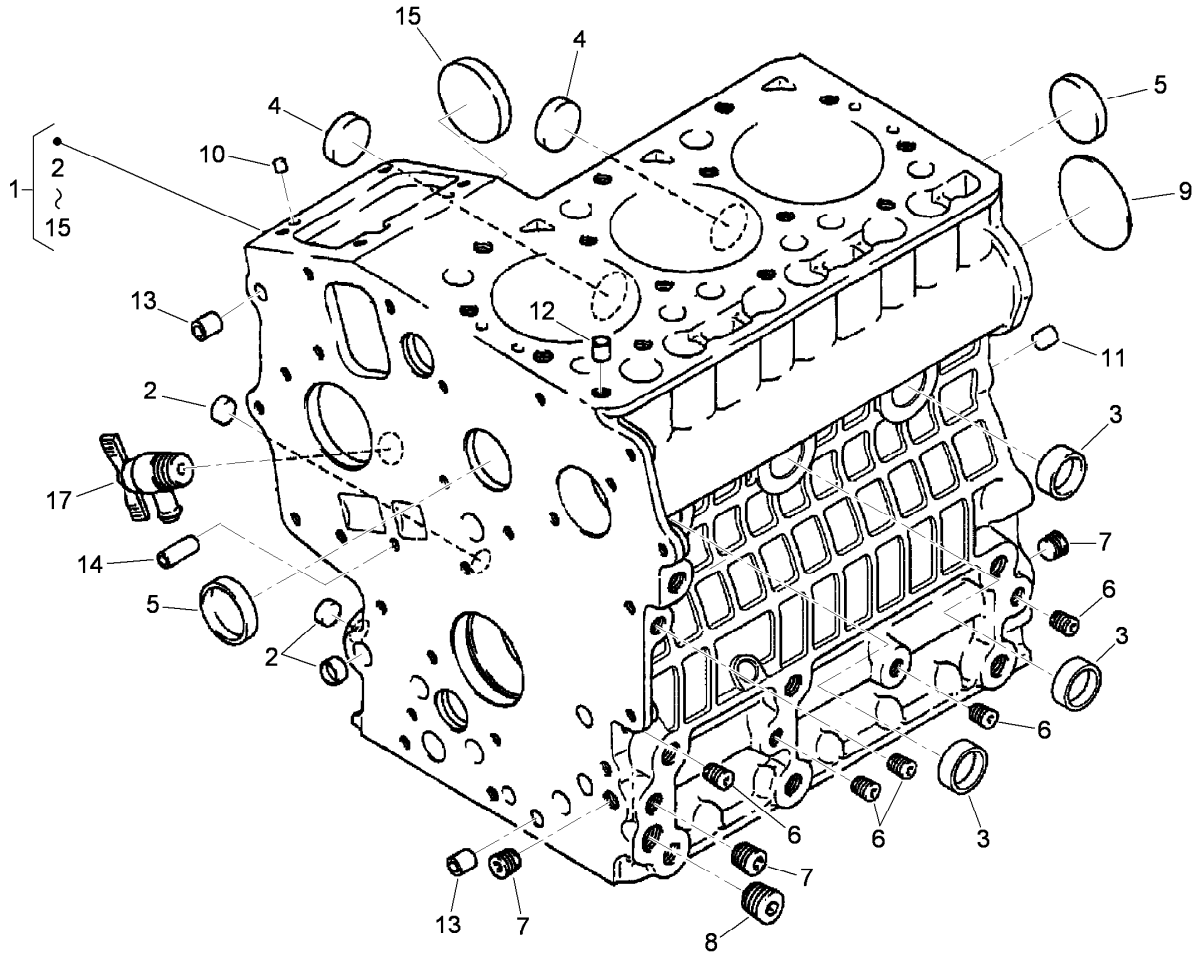

Crankcase Assembly

Ref.	Part Number	Qty.	Description
1	117-0301	1	Crankcase ASM
2	100-2019	3	Cap-Sealing
3	100-2020	3	Cap-Sealing
4	110-3702	2	Cap-Sealing
5	98-9398	2	Cap-Sealing
6	98-9687	5	Plug
7	98-7487	3	Plug
8	98-7488	1	Plug
9	100-1851	1	Plug-Expansion
10	98-9375	2	Pin-Straight
11	98-9377	2	Pin-Straight
12	98-7506	1	Pin-Pipe
13	98-9387	2	Pin-Pipe
14	100-2051	2	Pin-Pipe
15	100-1991	1	Cover-Fuel, Camshaft
17	98-9436	1	Drain Cock ASM

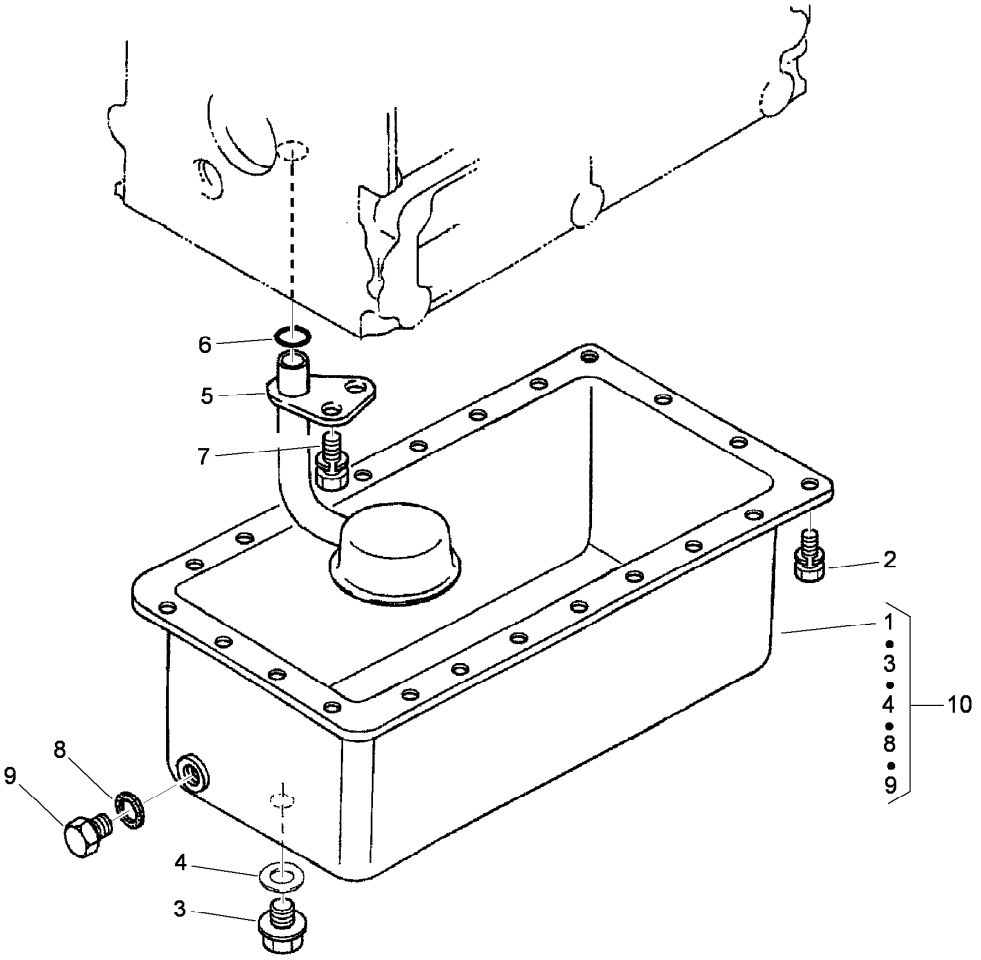

Oil Pan Assembly

Ref.	Part Number	Qty.	Description
1	112-2523	1	Pan-Oil
2	117-0302	22	Bolt
3	98-9686	1	Plug-Drain
4	110-9715	1	Gasket-Pan, Oil
5	100-2001	1	Strainer-Pickup, Oil
6	105-3776	1	O-Ring
7	100-9195	1	Bolt
8	98-7524	1	Gasket
9	114-8151	1	Plug-Drain
10	112-8327	1	Oil Pan Kit

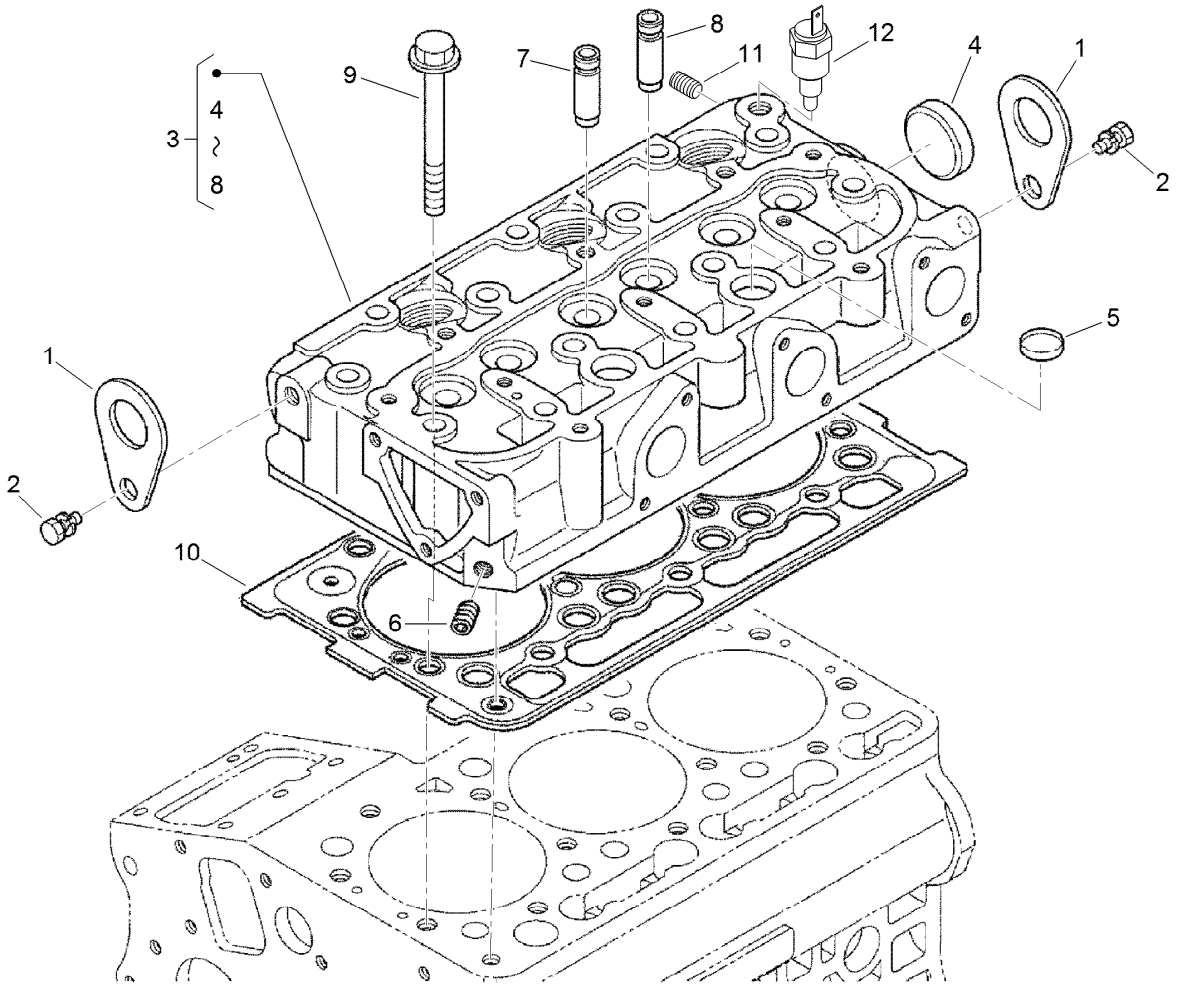

Cylinder Head Assembly

Ref.	Part Number	Qty.	Description
1	98-7531	2	Hook-Engine
2	98-7526	2	Bolt
3	112-8329	1	Head-Cylinder
4	105-3705	1	Cap-Sealing
5	98-9389	2	Cap-Sealing
6	98-9687	1	Plug
7	100-1882	3	Guide-Valve, Inlet
8	100-1883	3	Guide-Valve, Exhaust
9	100-1820	14	Bolt-Head, Cylinder
10	112-2520	1	Gasket-Head, Cylinder
11	98-9444	1	Plug
12	99-3582	1	Thermoswitch

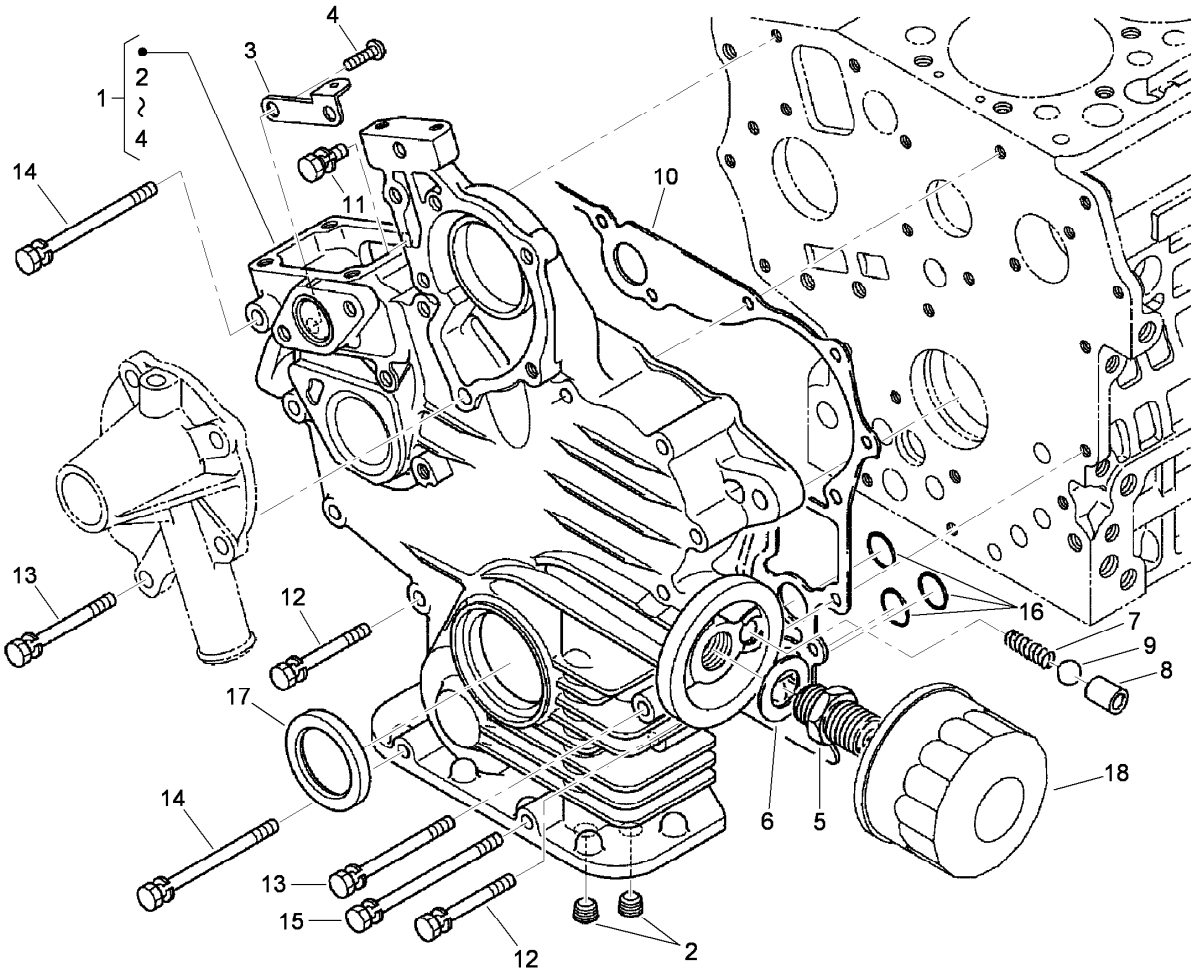

Gear Case and Oil Filter Cartridge Assembly

Ref.	*Part Number*	*Qty.*	*Description*
1	112-8331	1	Case-Gear
2	98-7488	2	Plug
3	110-3708	1	Stay-Spring, Start
4	100-2040	2	Screw
5	98-9388	1	Joint-Pipe
6	100-1926	1	Washer-Plain
7	100-2004	1	Spring
8	100-1894	1	Seat-Valve
9	100-1792	1	Ball
10	110-3709	1	Gasket-Gearcase
11	98-7605	1	Bolt
12	105-3797	9	Bolt
13	100-1922	2	Bolt
14	98-9357	2	Bolt
15	110-3710	1	Bolt
16	100-2206	3	O-Ring
17	100-1971	1	Seal-Oil
18	100-1892	1	Cartridge-Filter, Oil

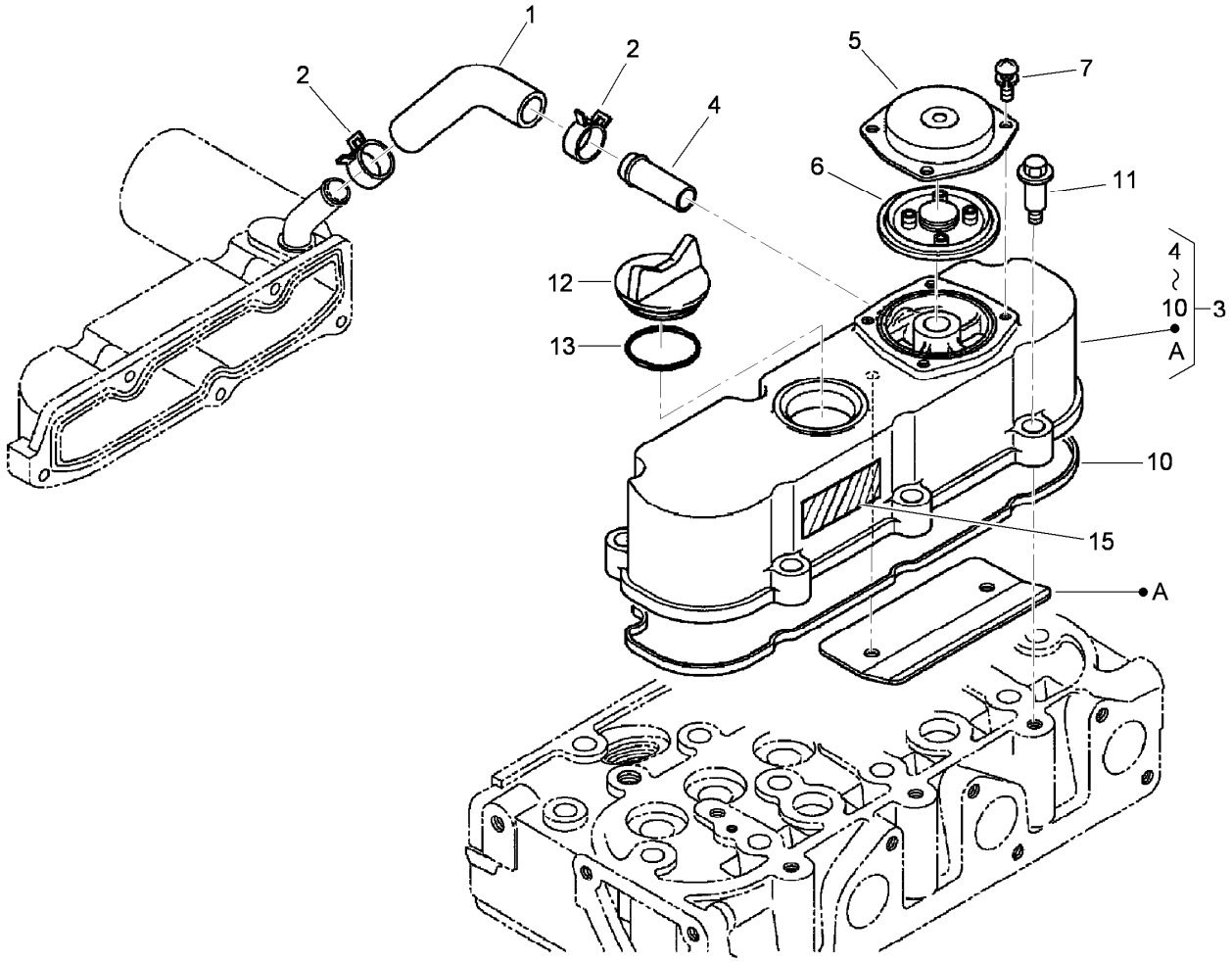

Cylinder Head Cover Assembly

Ref.	Part Number	Qty.	Description
1	110-3711	1	Tube-Breather
2	110-3712	2	Clamp-Hose
3	112-8332	1	Cylinder Head Cover ASM
4	98-9580	1	Pipe-Return, Water
5	110-3714	1	Cover-Breather
6	110-3715	1	Valve-Breather
7	98-9364	4	Screw (With Washer)
10	112-2521	1	Gasket-Cover, Head
11	108-7063	6	Bolt
12	107-9075	1	Plug-Filler, Oil
13	99-3446	1	O-Ring
15	110-3843	1	Label-Instruction

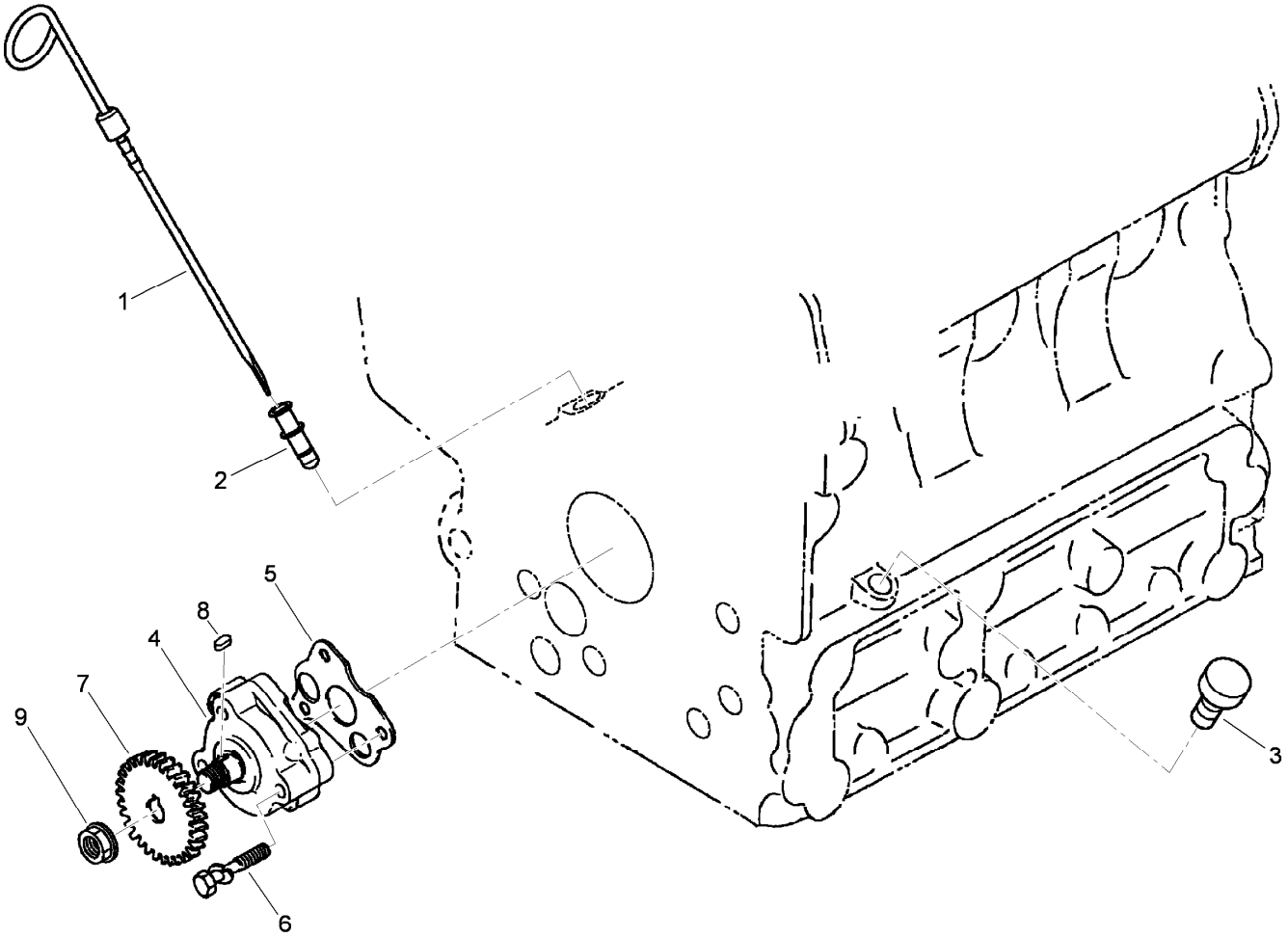

Dipstick, Guide and Oil Pump Assembly

Ref.	*Part Number*	*Qty.*	*Description*
1	110-3719	1	Gauge-Oil
2	105-4580	1	Guide-Gauge, Oil
3	110-3720	1	Plug-Gauge, Oil
4	100-2002	1	Oil Pump ASM
5	100-2003	1	Gasket-Pump, Oil
6	100-1923	3	Bolt
7	100-1893	1	Gear-Drive, Oil Pump
8	98-7658	1	Key-Feather
9	100-1779	1	Nut-Flange

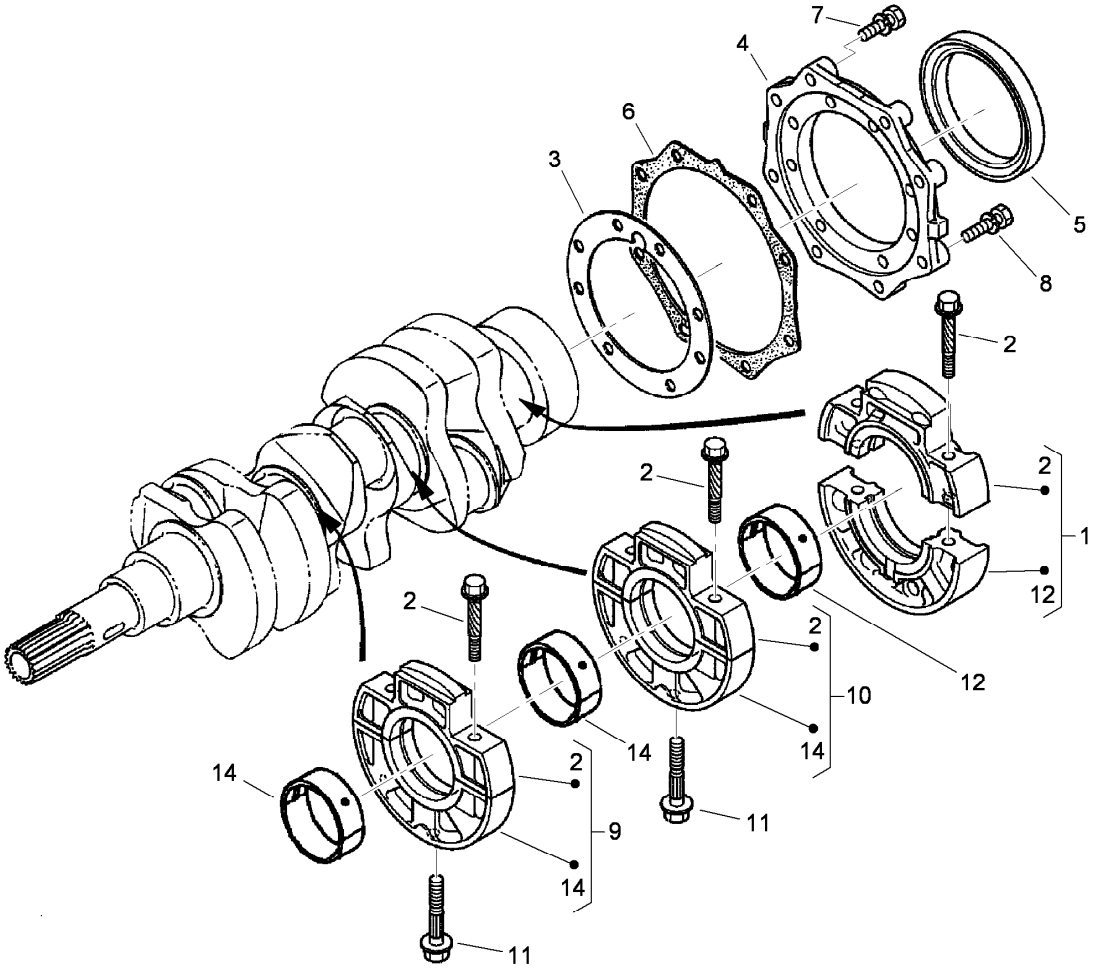

Main Bearing Case Assembly

Ref.	Part Number	Qty.	Description
1	112-2494	1	Wheel Case Bearing ASM
2	110-3723	6	Bolt-Case, Bearing
3	117-0304	1	Gasket-Case, Bearing
4	112-8334	1	Cover-Case, Bearing
5	110-3724	1	Seal-Oil
6	100-1876	1	Gasket-Cover, Case
7	98-7568	8	Bolt
8	100-1750	8	Bolt
9	112-2495	1	Main Case Bearing ASM
10	112-2496	1	Main Case Bearing ASM
11	100-1874	2	Bolt-Case, Bearing
12	110-3744	1	Crankshaft Metal ASM (STD)
12	110-3745	1	Crankshaft Metal ASM (-0.20Mm)
12	110-3746	1	Crankshaft Metal ASM (-0.40Mm)
14	110-3741	2	Crankshaft Metal ASM (STD)
14	110-3742	2	Crankshaft Metal ASM (-0.20Mm)
14	110-3743	2	Crankshaft Metal ASM (-0.40Mm)

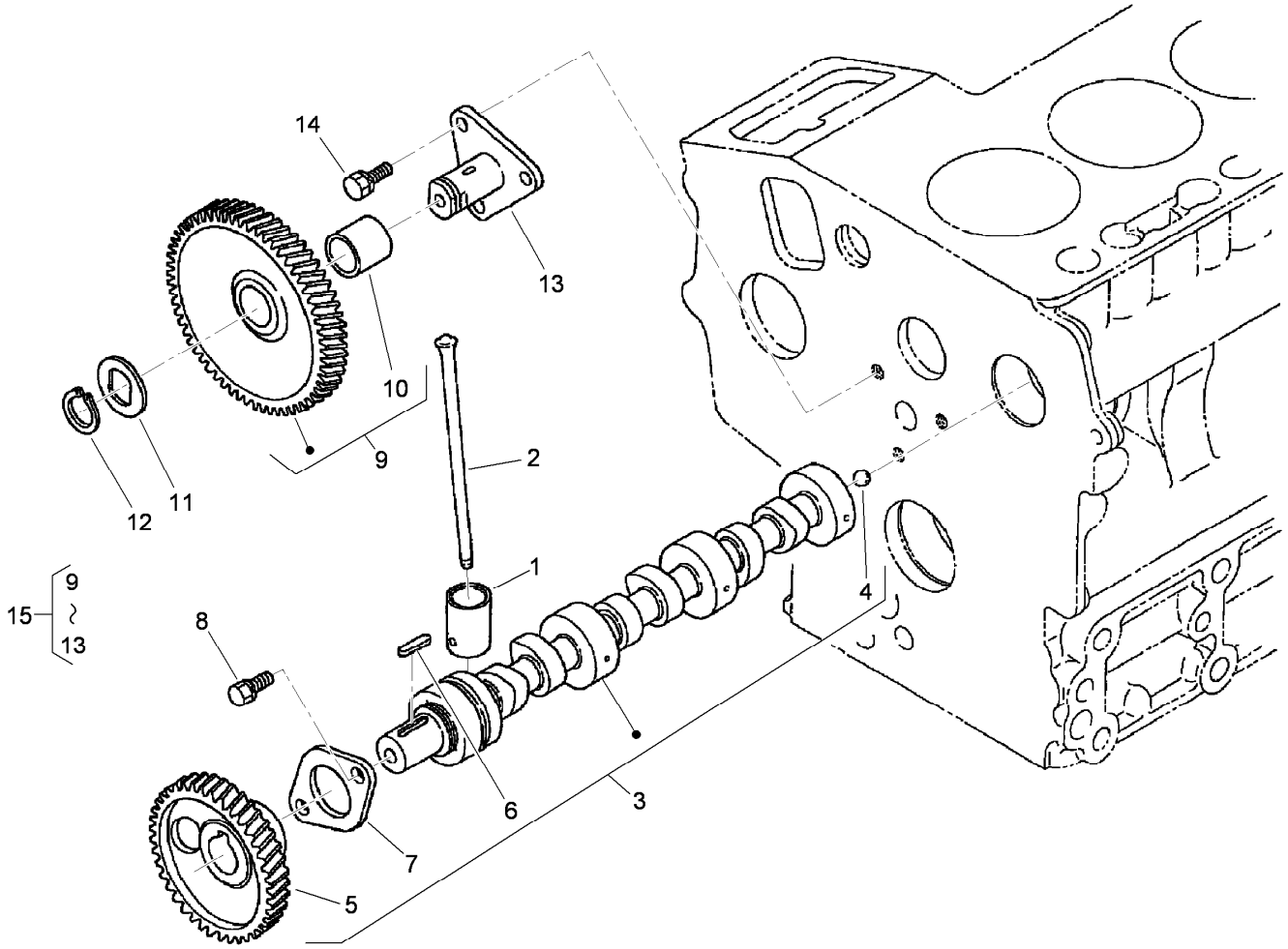

Cam Shaft and Idle Gear Assembly

Ref.	*Part Number*	*Qty.*	*Description*
1	110-3727	6	Tappet
2	100-1989	6	Rod-Push
3	117-0305	1	Camshaft ASM
4	110-3729	1	Ball
5	100-2163	1	Gear-Cam
6	98-9378	1	Key-Feather
7	100-1887	1	Stopper-Camshaft
8	98-9350	2	Bolt
9	100-1966	1	Gear-Idle
10	100-1968	1	Bushing
11	100-1970	1	Collar-Gear, Idle
12	100-1969	1	Ring-Snap
13	100-1967	1	Shaft-Gear, Idle
14	98-9351	1	Bolt
15	100-2240	1	Idle Gear ASM

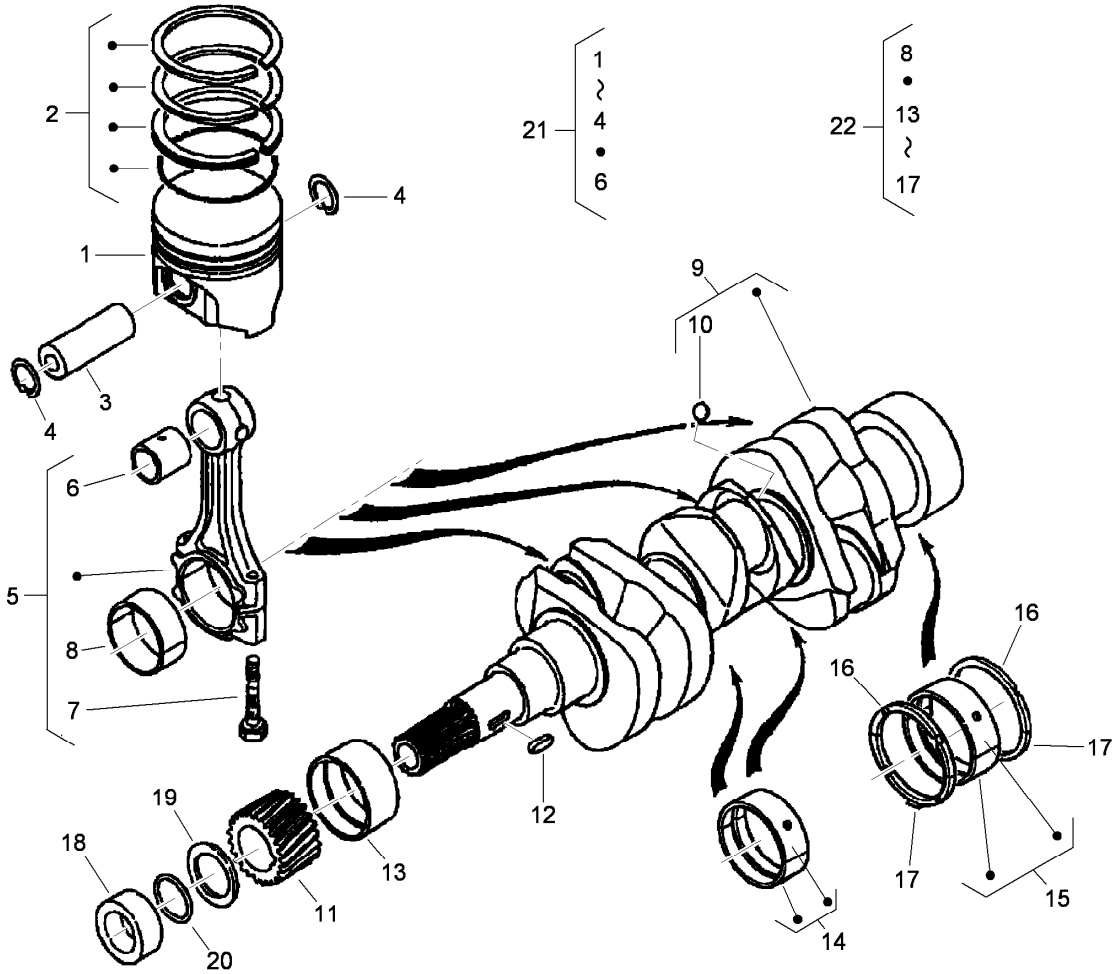

Piston and Crankshaft Assembly

Ref.	Part Number	Qty.	Description
1	117-0306	3	Piston (STD)
1	117-0307	3	Piston (+.25Mm)
2	112-2501	3	Piston Ring ASM (STD)
2	112-2502	3	Piston Ring ASM (+.25Mm)
3	110-3734	3	Pin-Piston
4	100-1835	6	Circlip-Internal
5	110-3735	3	Connecting Rod ASM
6	110-3736	3	Bushing-Pin, Piston
7	100-1999	6	Bolt-Rod, Connecting
8	100-1942	3	Metal-Crankpin (-0.20Mm)
8	100-1943	3	Metal-Crankpin (-0.40Mm)
8	100-2000	3	Metal-Crankpin (STD)
9	117-0308	1	Crankshaft
10	100-1791	3	Ball
11	100-1891	1	Gear-Crankshaft
12	100-1752	1	Key-Feather
13	110-3738	1	Metal-Crankshaft (STD)
13	110-3739	1	Metal-Crankshaft (-.0.20Mm)
13	110-3740	1	Metal-Crankshaft (-0.40Mm)
14	110-3741	1	Crankshaft Metal ASM (STD)
14	110-3742	1	Crankshaft Metal ASM (-0.20Mm)
14	110-3743	1	Crankshaft Metal ASM (-0.40Mm)
15	110-3744	1	Crankshaft Metal ASM (STD)
15	110-3745	1	Crankshaft Metal ASM (-0.20Mm)
15	110-3746	1	Crankshaft Metal ASM (-0.40Mm)
16	100-1836	2	Metal-Side (STD)
16	100-1838	2	Metal-Side (+0.20Mm)
16	100-1839	2	Metal-Side (+0.40Mm)
17	117-0309	2	Metal-Side (STD)
17	117-0310	2	Metal-Side (+0.20Mm)
17	117-0311	2	Metal-Side (+0.40Mm)
18	100-1890	1	Collar-Crankshaft
19	100-1974	1	Slinger-Oil
20	100-2209	1	O-Ring
21	112-2497	3	Piston Kit (STD)
21	112-2498	3	Piston Kit (+.25Mm)
22	110-3749	1	Engine Metal Kit
22	110-3750	1	Engine Metal Kit
22	110-3751	1	Engine Metal Kit

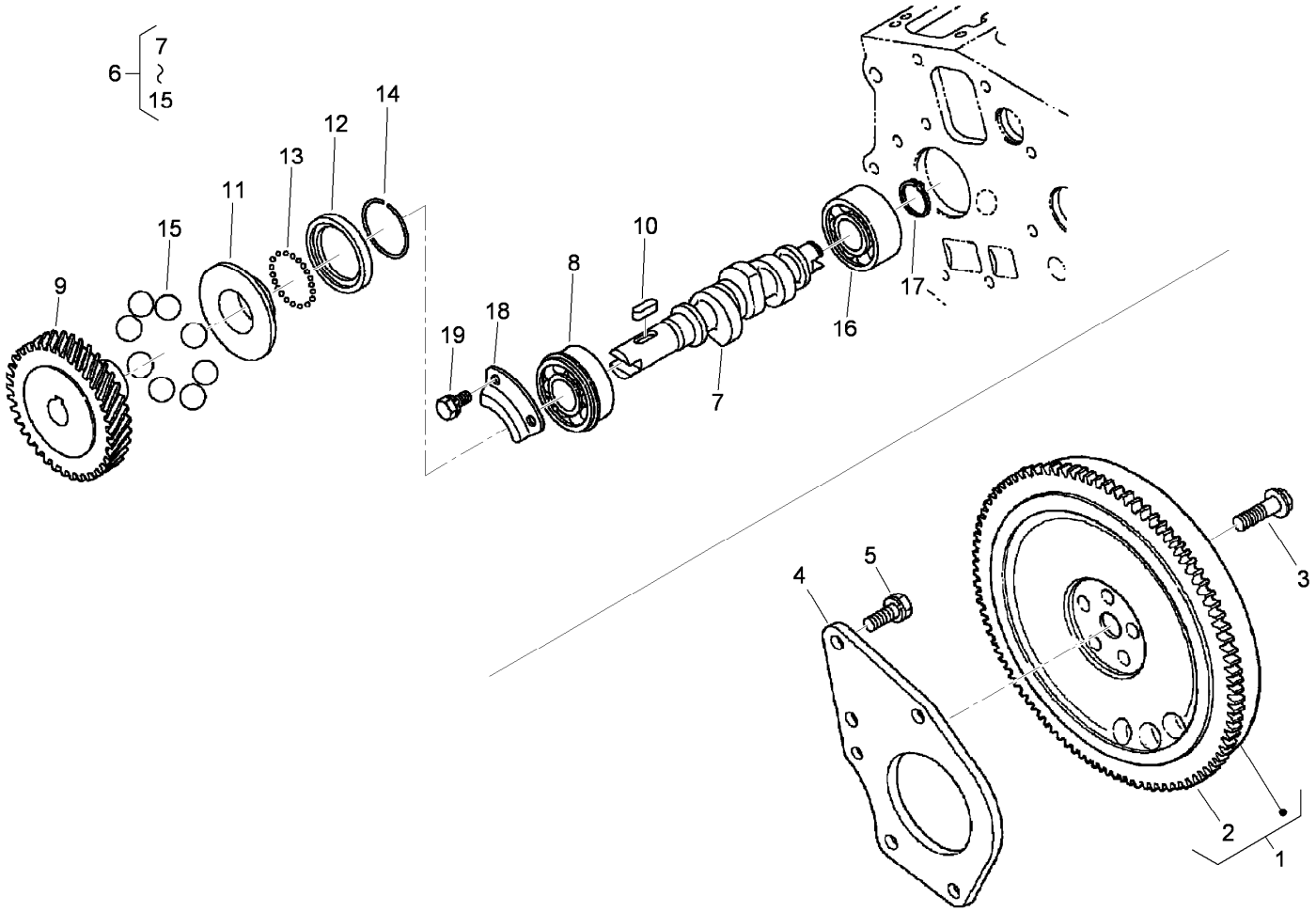

Flywheel and Fuel Camshaft Assembly

Ref.	Part Number	Qty.	Description
1	110-3752	1	Flywheel
2	112-2816	1	Gear-Ring
3	100-1930	5	Bolt-Flywheel
4	117-0323	1	Plate-End, Rear
5	110-3754	3	Bolt
6	112-8335	1	Fuel Camshaft ASM
7	110-3756	1	Camshaft-Fuel
8	100-1795	1	Bearing-Ball
9	100-2006	1	Gear-Pump, Injection
10	100-1752	1	Key-Feather
11	112-8336	1	Sleeve-Governor
12	100-1904	1	Case-Ball, Governor
13	100-1790	32	Ball
14	100-1843	1	Circ-Clip
15	100-1793	8	Ball
16	110-3757	1	Bearing-Ball
17	100-1784	1	Circ-Clip, External
18	100-1888	1	Stopper-Fuel, Camshaft
19	98-9350	2	Bolt

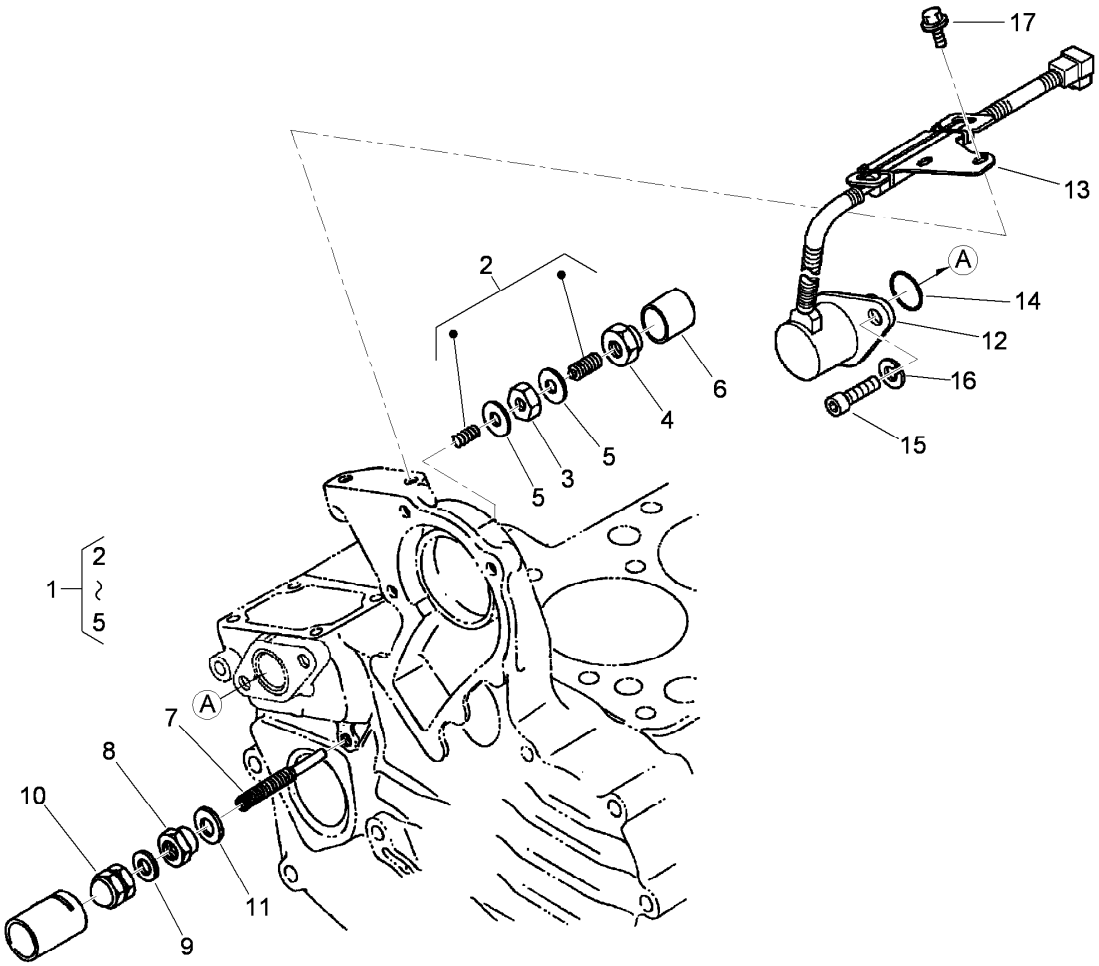

Idle Apparatus and Stop Solenoid Assembly

Ref.	Part Number	Qty.	Description
1	100-1898	1	Idle Apparatus ASM
2	100-1899	1	Adjusting Bolt ASM
3	100-1846	1	Nut
4	100-1901	1	Nut-Cap
5	98-7428	2	Gasket
6	100-1902	1	Cap
7	110-3758	1	Bolt-Adjusting
8	100-2175	1	Nut-Lock
9	98-7654	1	Gasket
10	99-8387	1	Nut-Cap
11	107-9081	1	Gasket
12	110-3760	1	Solenoid-Stop
13	110-3761	1	Stay-Commander, Coil
14	110-3762	1	O-Ring
15	110-3763	2	Bolt-HSH
16	98-7699	2	Washer-Spring
17	100-1774	2	Bolt-Flange

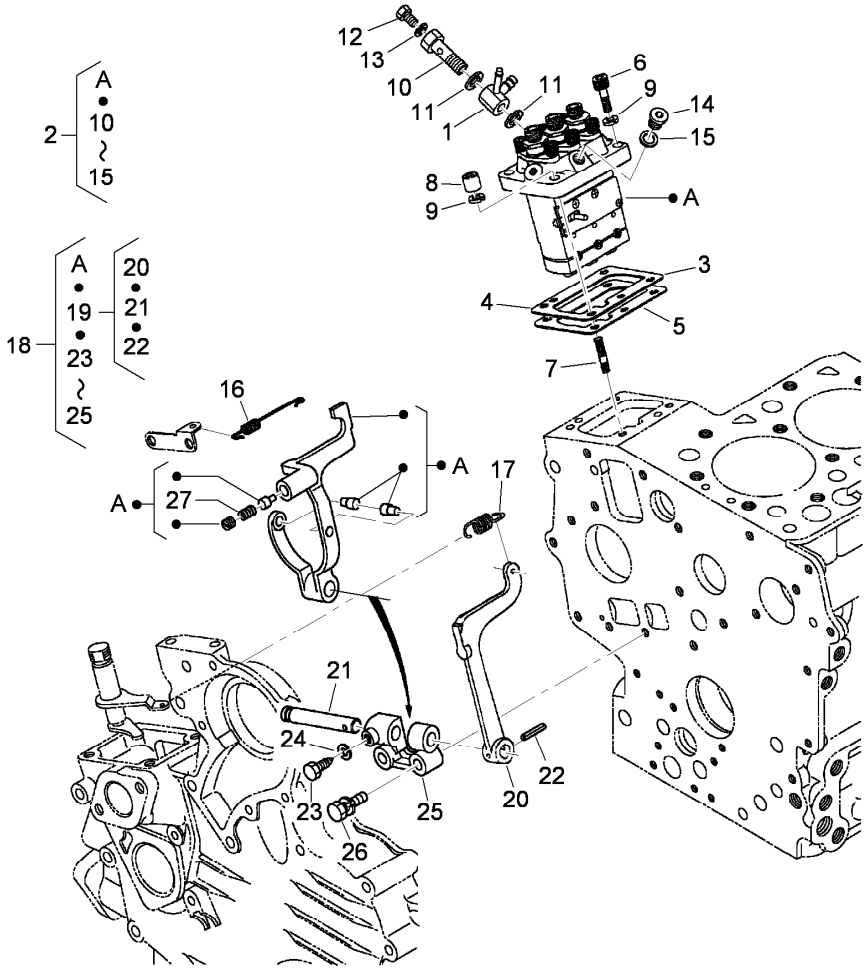

Injection Pump and Governor Assembly

Ref.	Part Number	Qty.	Description
1	110-3764	1	Joint
2	110-3765	1	Injection Pump ASM
3	98-9456	1	Shim-Injection (0.20Mm)
4	98-9457	1	Shim-Injection (0.25Mm)
5	98-9458	1	Shim-Injection (0.30Mm)
6	98-9361	2	Bolt-HSH
7	98-9438	2	Stud
8	98-9440	2	Nut-Cap
9	98-7699	4	Washer-Spring
10	100-1896	1	Screw-Hollow
11	98-9445	2	Gasket
12	98-9430	1	Screw
13	98-9446	1	Gasket
14	98-9466	1	Plug

Ref.	Part Number	Qty.	Description
15	98-9451	1	Gasket
16	110-3766	1	Spring-Start
17	110-3767	1	Spring-Governor
18	112-8337	1	Fork Lever ASM
19	100-1905	1	Fork Lever ASM
20	100-1907	1	Lever-Fork
21	100-1908	1	Shaft-Lever, Fork
22	100-1751	1	Pin-Spring
23	100-1845	1	Bolt
24	100-2204	1	Washer-Spring
25	100-1909	1	Holder-Lever, Fork
26	100-1763	2	Bolt
27	117-0313	1	Spring

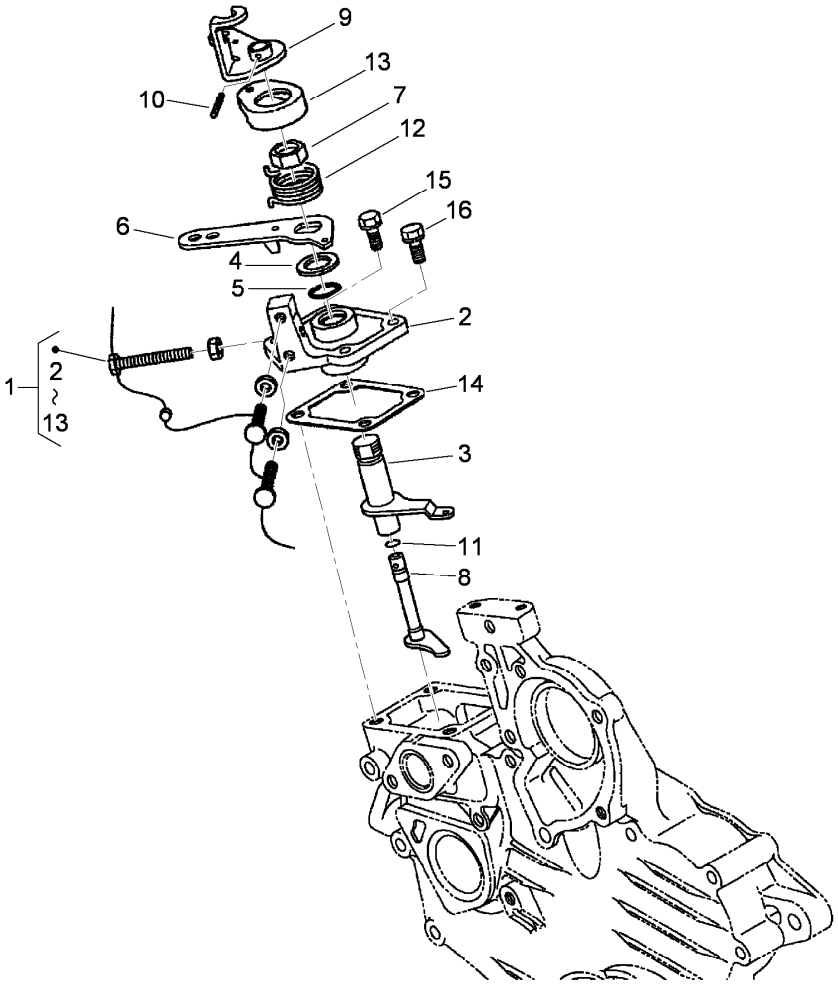

Speed Control Plate Assembly

Ref.	Part Number	Qty.	Description
1	110-3769	1	Speed Control Plate ASM
2	110-3770	1	Plate-Control, Speed
3	110-3771	1	Lever-Governor
4	110-3772	1	Collar
5	100-2208	1	O-Ring
6	110-3773	1	Lever-Control, Speed
7	110-3774	1	Nut-Control, Speed
8	110-3775	1	Shaft-Lever
9	110-3776	1	Lever-Stop, Engine
10	110-3777	1	Pin-Spring
11	100-2207	1	O-Ring
12	110-3778	1	Spring-Return
13	110-3779	1	Cap
14	100-1962	1	Gasket-Plate, Control
15	98-7605	2	Bolt
16	112-2507	2	Bolt

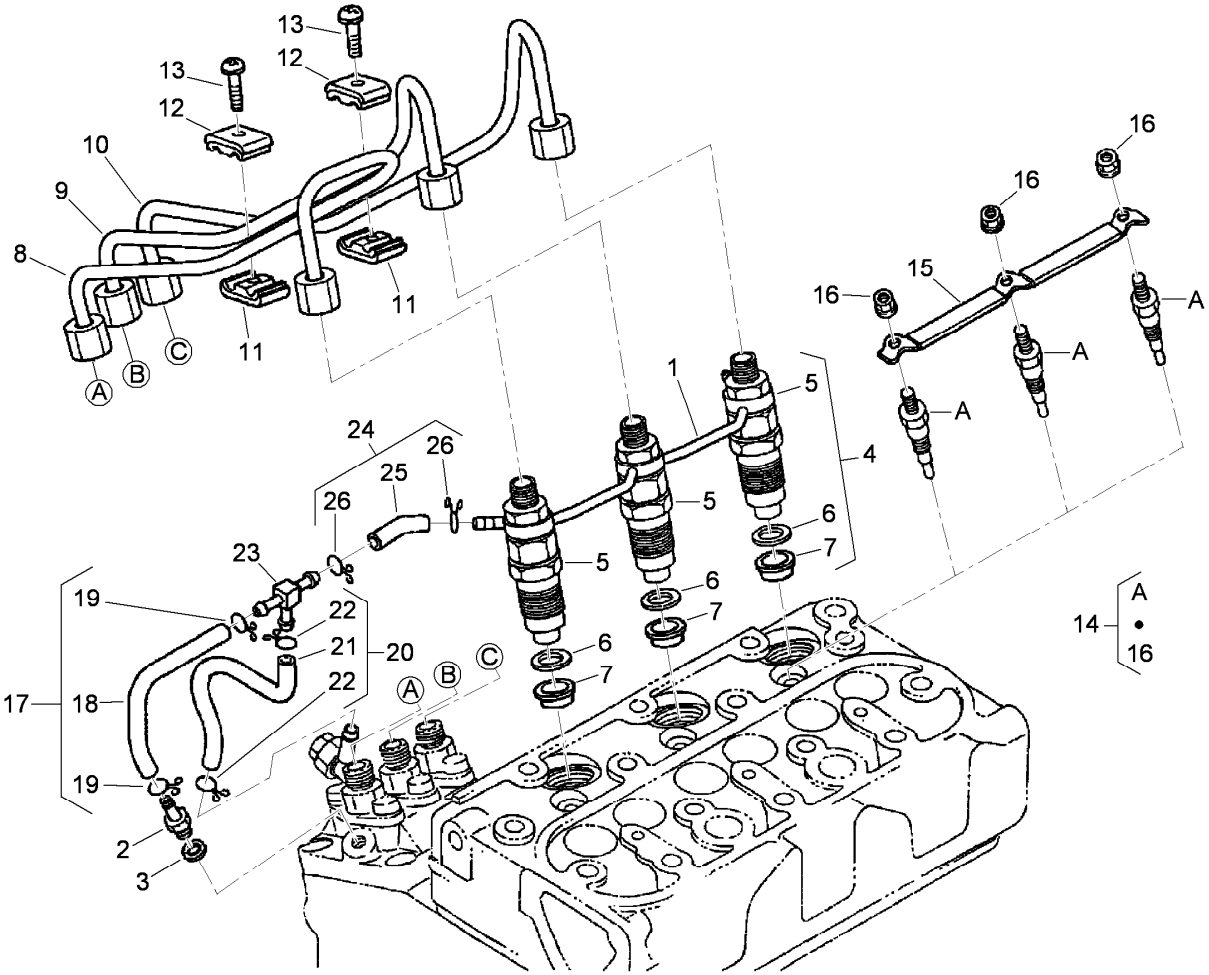

Nozzle Holder and Glow Plug Assembly

Ref.	Part Number	Qty.	Description
1	110-3780	1	Over Flow Pipe ASM
2	98-9431	1	Screw-Bleeder, Air
3	98-7654	1	Gasket
4	100-1982	3	Nozzle Holder Kit
5	100-1758	3	Nozzle Holder ASM
6	98-7676	3	Gasket
7	98-7677	3	Seal-Heat
8	110-3781	1	Pipe-Injection
9	110-3782	1	Pipe-Injection
10	110-3783	1	Pipe-Injection
11	98-7682	2	Clamp-Pipe
12	98-7683	2	Clamp-Pipe
13	98-7684	2	Screw (W/Washer)

Ref.	Part Number	Qty.	Description
14	98-7685	3	Plug-Glow
15	110-3784	1	Cord-Plug, Glow
16	99-8377	3	Nut-Flange
17	110-3785	1	Fuel Tube ASM
18	110-3786	1	Tube-Fuel
19	98-7671	4	Clip-Pipe
20	110-3787	1	Fuel Tube ASM
21	110-3788	1	Tube-Fuel
22	98-7671	2	Clip-Pipe
23	112-8338	1	Pipe-Joint, T
24	110-3790	1	Fuel Tube ASM
25	110-3791	1	Tube-Fuel
26	100-2217	2	Clip-Pipe

Nozzle Holder Assembly

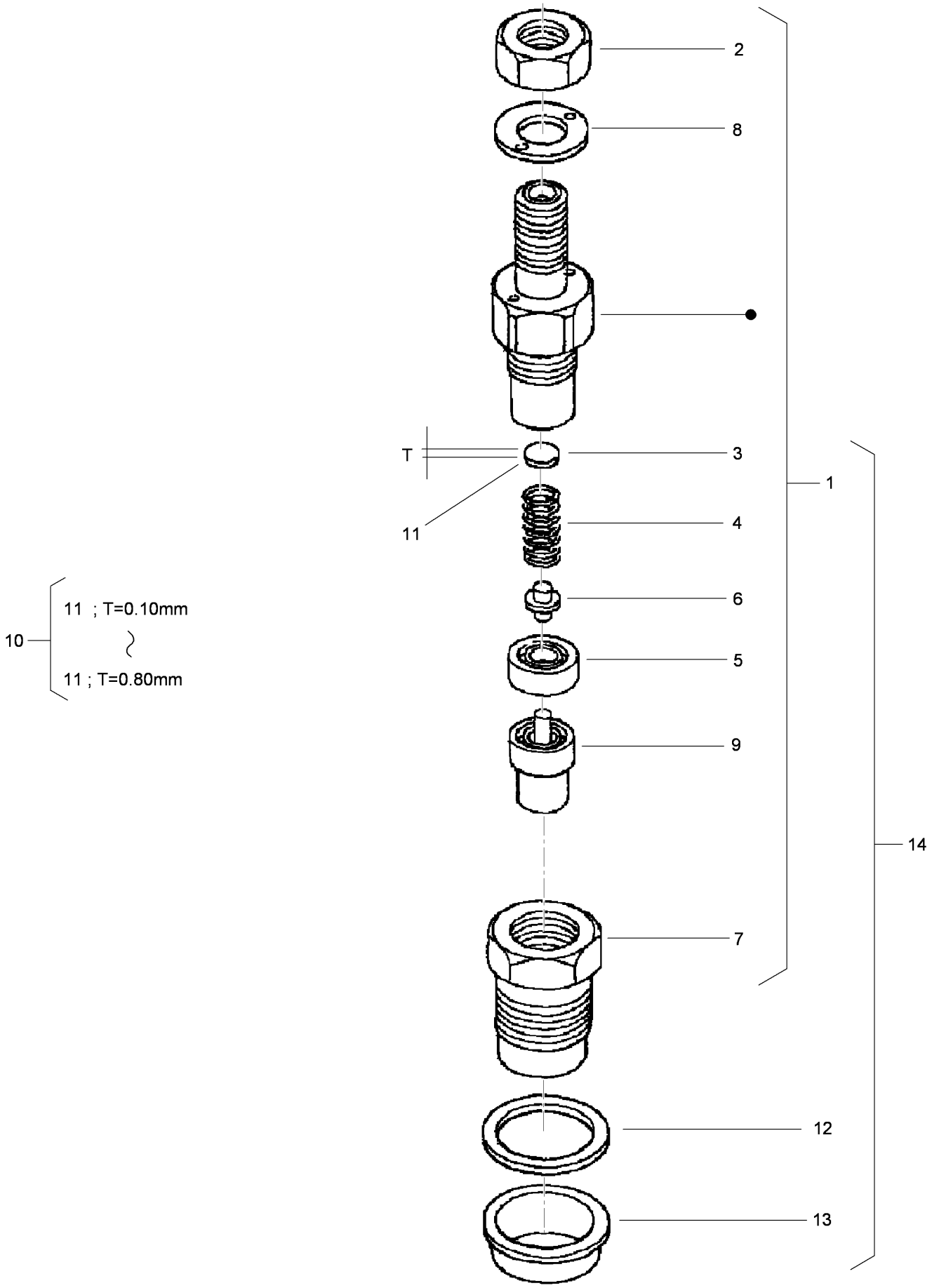

Nozzle Holder Assembly (continued)

Ref.	Part Number	Qty.	Description
1	100-1758	3	Nozzle Holder ASM
2	98-7613	3	Nut
3	98-7642	3	Washer-Adjusting (0.900Mm)
4	98-7647	3	Spring-Nozzle
5	98-7665	3	Spacer-Distance
6	98-7666	3	Rod-Push
7	100-2008	3	Nut-Nozzle
8	98-7668	3	Washer
9	100-2009	3	Piece-Nozzle
10	98-9448	3	Adjusting Washer ASM
11	98-7642	3	Washer-Adjusting (0.900Mm)
11	98-7841	3	Washer-Adjusting (0.925Mm)
11	98-7842	3	Washer-Adjusting (0.950Mm)
11	98-7843	3	Washer-Adjusting (0.975Mm)
11	98-7844	3	Washer-Adjusting (1.000Mm)
11	98-7845	3	Washer-Adjusting (1.025Mm)
11	98-7846	3	Washer-Adjusting (1.050Mm)
11	98-7847	3	Washer-Adjusting (1.075Mm)
11	98-7848	3	Washer-Adjusting (1.100Mm)
11	98-7849	3	Washer-Adjusting (1.125Mm)
11	98-7850	3	Washer-Adjusting (1.150Mm)
11	98-7851	3	Washer-Adjusting (1.175Mm)
11	98-7852	3	Washer-Adjusting (1.200Mm)
11	98-7853	3	Washer-Adjusting (1.225Mm)
11	98-7854	3	Washer-Adjusting (1.250Mm)
11	98-7855	3	Washer-Adjusting (1.275Mm)
11	98-7856	3	Washer-Adjusting 1.300Mm)
11	98-7857	3	Washer-Adjusting (1.325Mm)
11	98-7858	3	Washer-Adjusting (1.350Mm)
11	98-7859	3	Washer-Adjusting (1.375Mm)
11	98-7860	3	Washer-Adjusting (1.400Mm)
11	98-7861	3	Washer-Adjusting (1.425Mm)
11	98-7862	3	Washer-Adjusting (1.450Mm)
11	98-7863	3	Washer-Adjusting (1.475Mm)
11	98-7864	3	Washer-Adjusting (1.500Mm)
11	98-7865	3	Washer-Adjusting (1.525Mm)
11	98-7866	3	Washer-Adjusting (1.550Mm)
11	98-7867	3	Washer-Adjusting (1.575Mm)
11	98-7868	3	Washer-Adjusting (1.600Mm)
11	98-7869	3	Washer-Adjusting (1.625Mm)
11	98-7870	3	Washer-Adjusting (1.650Mm)
11	98-7871	3	Washer-Adjusting (1.675Mm)
11	98-7872	3	Washer-Adjusting (1.700Mm)
11	98-7873	3	Washer-Adjusting (1.725Mm)
11	98-7874	3	Washer-Adjusting (1.750Mm)
11	98-7875	3	Washer-Adjusting (1.775Mm)
11	98-7876	3	Washer-Adjusting (1.800Mm)
11	98-7877	3	Washer-Adjusting (1.825Mm)
11	98-7878	3	Washer-Adjusting (1.850Mm)
11	98-7879	3	Washer-Adjusting (1.875Mm)
11	98-7880	3	Washer-Adjusting (1.900Mm)
11	98-7881	3	Washer-Adjusting (1.925Mm)
11	98-7882	3	Washer-Adjusting (1.950Mm)
12	98-7676	3	Gasket
13	98-7677	3	Seal-Heat
14	100-1982	3	Nozzle Holder Kit

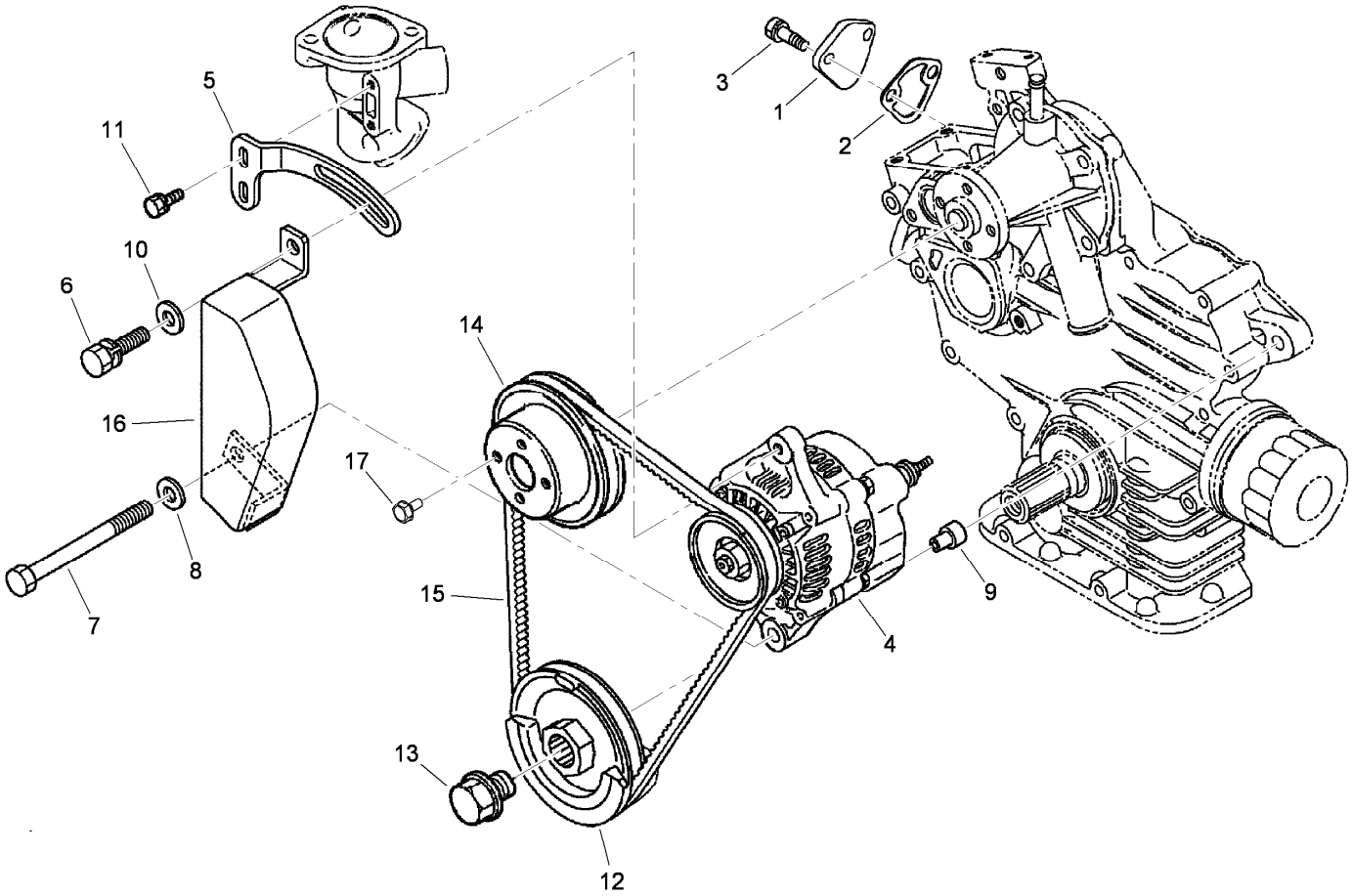

Alternator, Pulley and Fuel Pump Cover Assembly

Ref.	*Part Number*	*Qty.*	*Description*
1	99-3514	1	Cover
2	98-9636	1	Gasket-Pump, Fuel
3	98-7692	2	Bolt
4	112-8350	1	Alternator (12V-60Amp)
5	117-0314	1	Stay-Alternator
6	98-7697	1	Bolt
7	110-3793	1	Bolt
8	98-7660	1	Washer-Plain
9	110-3794	1	Collar
10	100-9233	1	Washer-Plain
11	98-7605	2	Bolt
12	112-8339	1	Pulley-Drive, Fan
13	100-1978	1	Bolt
14	100-1921	1	Pulley-Fan
15	110-3796	1	Belt-V
16	117-0315	1	Cover-Alternator
17	99-8363	4	Bolt-Flange

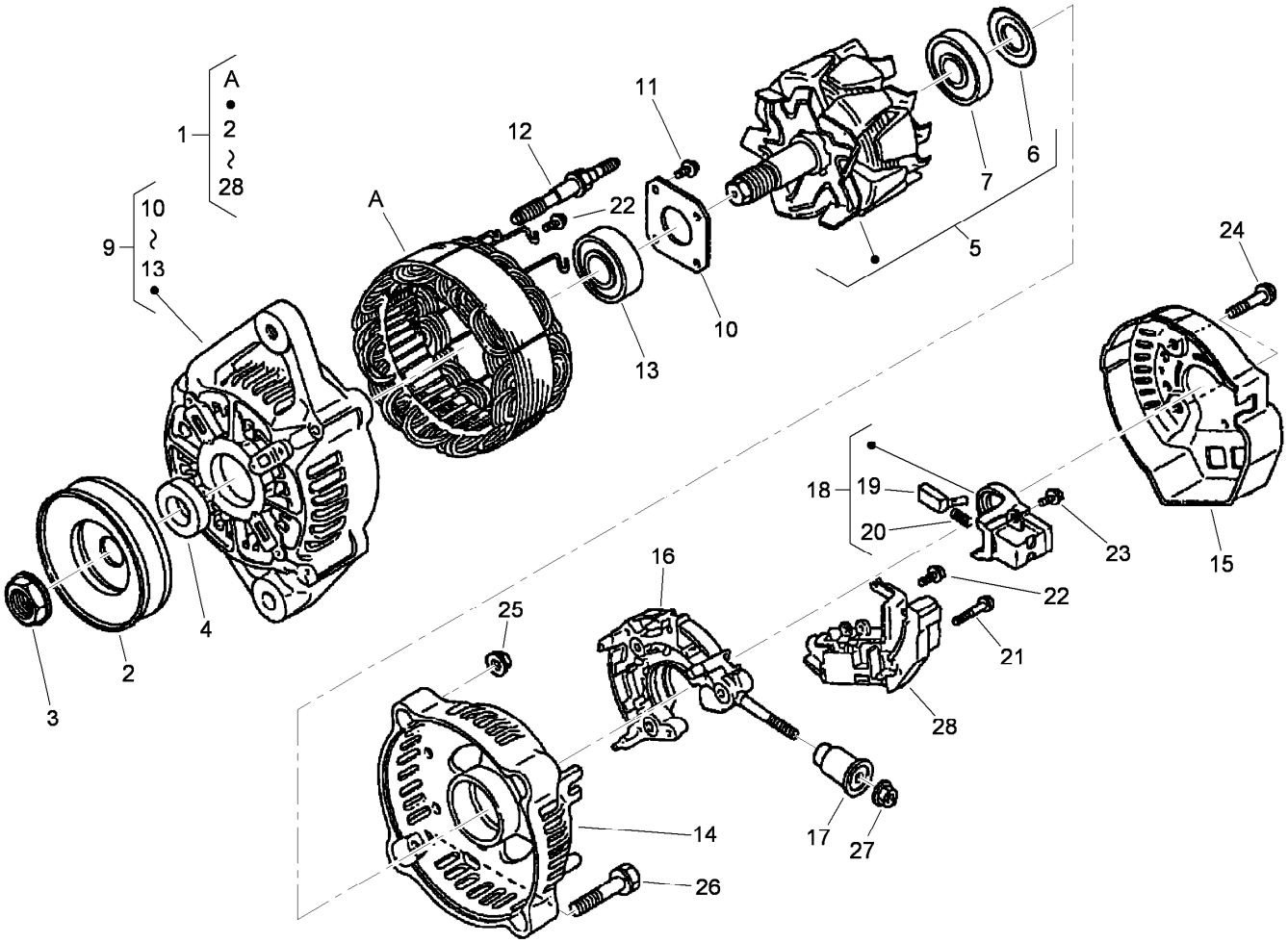

Alternator Components Assembly

Ref.	Part Number	Qty.	Description
1	112-8350	1	Alternator (12V-60Amp)
2	98-9453	1	Pulley-Dynamo
3	98-7708	1	Nut
4	98-7709	1	Collar
5	117-0317	1	Rotor ASM
6	98-7711	1	Cover-Bearing
7	107-0138	1	Bearing-Ball
9	117-0316	1	Drive End Frame ASM
10	98-7715	1	Plate-Retainer
11	98-7716	4	Screw-Head, Round
12	98-7717	2	Bolt-Through
13	107-0137	1	Bearing-Ball
14	117-0318	1	*obs* Frame-End
15	117-0320	1	Cover-End

Ref.	Part Number	Qty.	Description
16	117-0322	1	Holder
17	117-0321	1	Insulation-Brush
18	107-0141	1	Brush Holder ASM
19	98-7724	2	Brush
20	98-7725	2	Spring-Brush
21	98-7726	2	Screw-Head, Round
22	98-7727	6	Screw-Head, Round
23	98-7728	1	Screw-Head, Round
24	98-7729	3	Bolt
25	98-7730	2	Nut
26	98-7731	2	Bolt
27	98-7732	1	Nut
28	117-0319	1	Regulator ASM

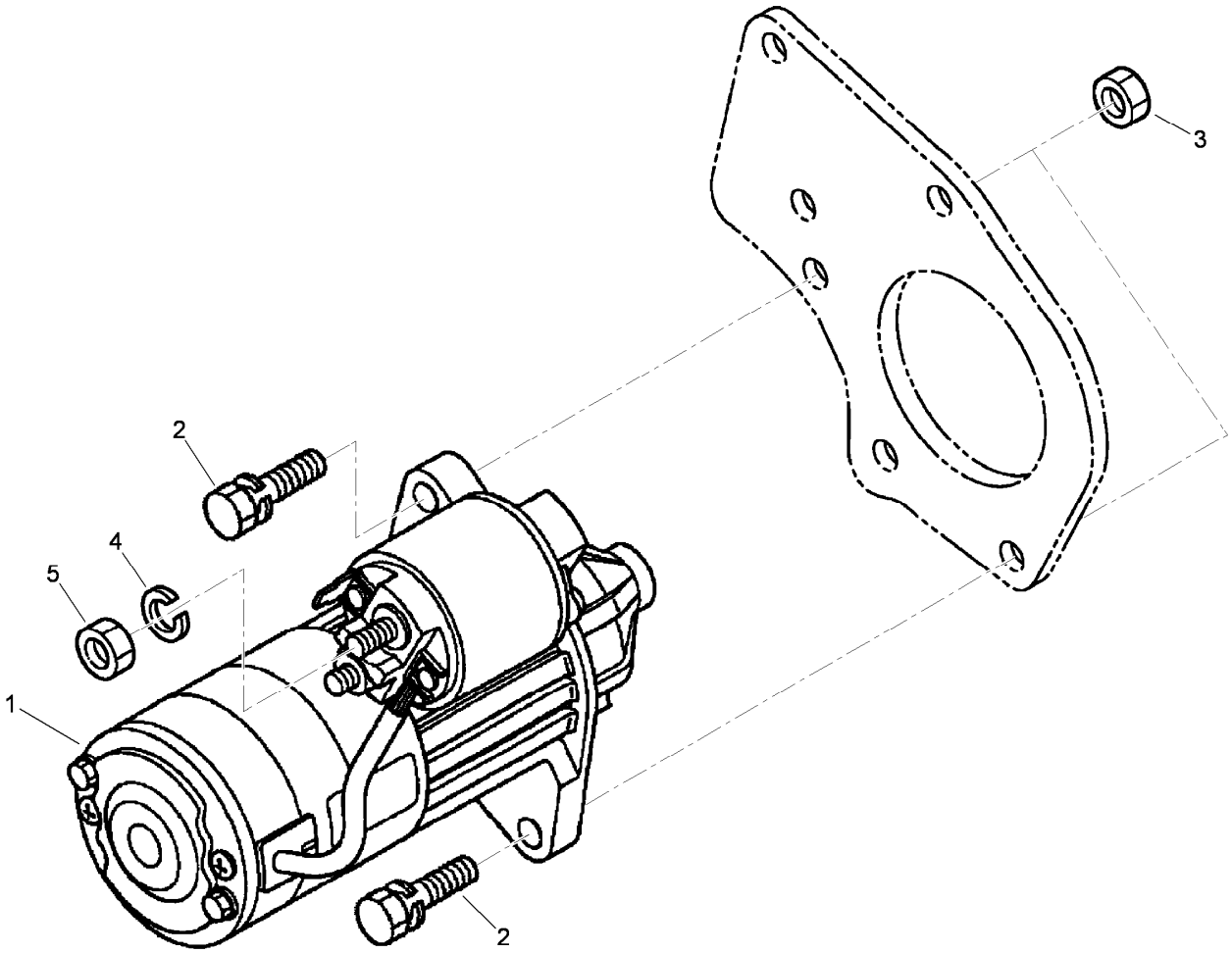

Starter Assembly

Ref.	*Part Number*	*Qty.*	*Description*
1	110-3800	1	Starter ASM
2	100-1770	2	Bolt
3	98-7661	2	Nut
4	98-7535	1	Washer-Spring
5	98-7534	1	Nut

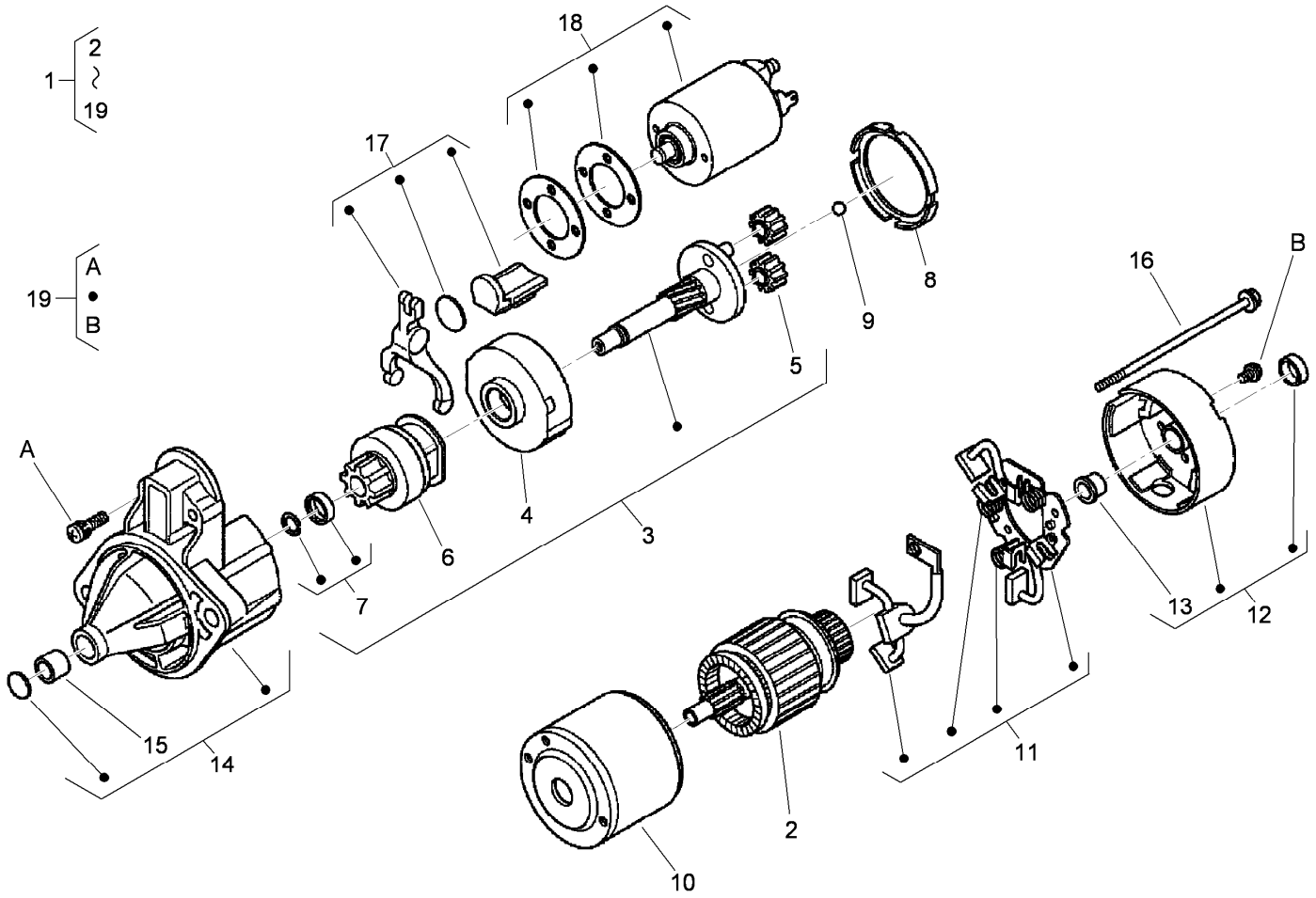

Starter Components Assembly

Ref.	Part Number	Qty.	Description
1	110-3800	1	Starter ASM
2	110-3801	1	Armature
3	110-3802	1	Shaft ASM
4	110-3803	1	Gear-Internal
5	110-3804	3	Gear-Planetary
6	110-3805	1	Clutch-Running, Over
7	110-3806	1	Stopper
8	110-3807	1	Gasket
9	110-3808	1	Ball
10	110-3809	1	Yoke
11	110-3810	1	Brush Holder ASM
12	110-3811	1	Rear Bracket ASM
13	110-3812	1	Bushing
14	110-3813	1	Front Bracket ASM
15	110-3814	1	Bushing
16	110-3815	2	Bolt
17	110-3816	1	Fork Lever ASM
18	110-3817	1	Magnetic Switch ASM
19	110-3818	1	Screws (Set Of 4)

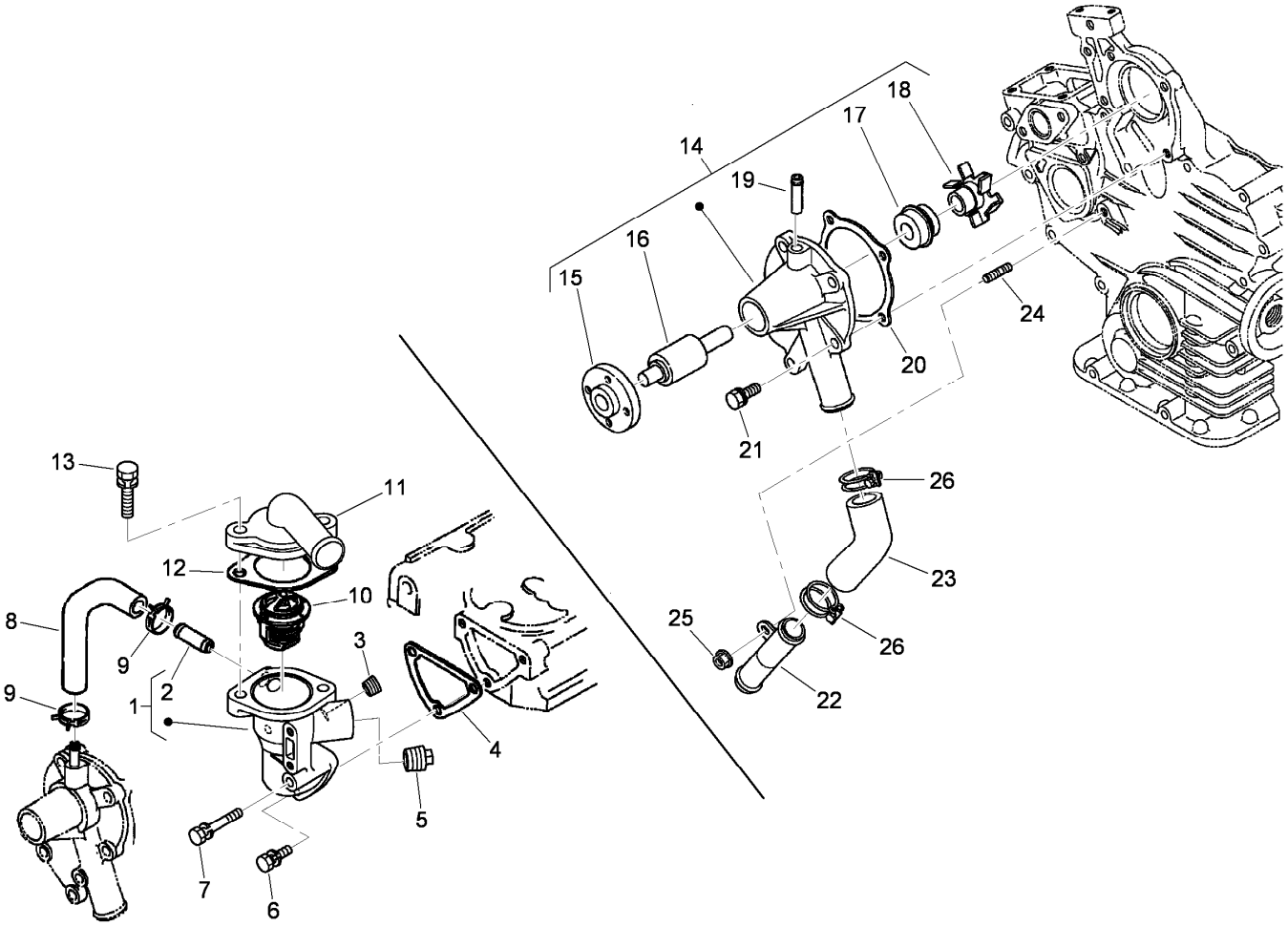

Water Flange and Thermostat Assembly

Ref.	Part Number	Qty.	Description
1	110-3819	1	Water Flange ASM
2	98-9580	1	Pipe-Return, Water
3	98-9444	1	Plug
4	110-3820	1	Gasket-Flange, Water
5	110-3821	1	Plug
6	98-7692	2	Bolt
7	105-3797	1	Bolt
8	110-3822	1	Pipe-Return, Water
9	98-9579	2	Band-Pipe
10	98-7778	1	Thermostat ASM
11	110-3823	1	Cover-Thermostat
12	105-3748	1	Gasket-Thermostat
13	98-7777	2	Bolt

Ref.	Part Number	Qty.	Description
14	110-3824	1	Water Pump ASM
15	100-1933	1	Flange-Pump, Water
16	100-1934	1	Bearing-Ball
17	99-3518	1	Water Pump Seal ASM
18	110-3825	1	Impeller-Pump, Water
19	100-1932	1	Pipe-Return, Water
20	110-3826	1	Gasket-Pump, Water
21	100-1750	4	Bolt
22	100-1918	1	Pipe-Water
23	110-3827	1	Pipe-Water
24	100-1924	1	Stud
25	100-2203	1	Nut-Flange
26	110-3828	2	Band-Pipe

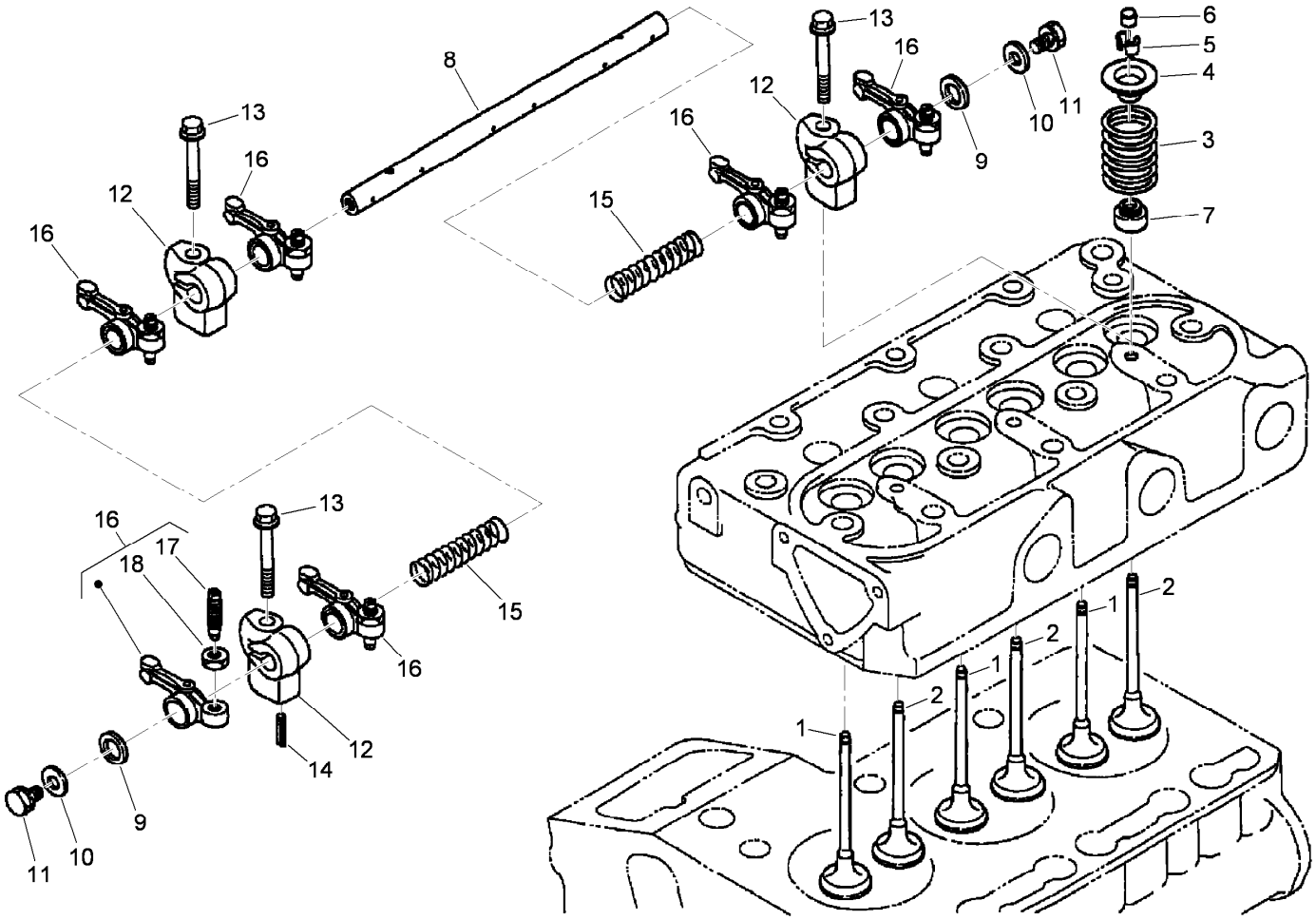

Valve and Rocker Arm Assembly

Ref.	Part Number	Qty.	Description
1	112-2514	3	Valve-Inlet
2	112-2515	3	Valve-Exhaust
3	100-1823	6	Spring-Valve
4	100-1825	6	Retainer-Spring, Valve
5	100-1826	6	Collet-Spring, Valve
6	100-2155	6	Cap-Valve
7	100-1797	6	Seal-Stem, Valve
8	112-8341	1	Shaft-Arm, Rocker
9	100-2044	2	Washer
10	110-3832	2	Washer-Plain
11	100-1762	2	Bolt
12	110-3833	3	Bracket-Arm, Rocker
13	110-3834	3	Bolt-Flange
14	98-7602	1	Pin-Spring
15	112-8342	2	Spring
16	100-1884	6	Rocker Arm ASM
17	100-1885	6	Screw-Adjusting
18	100-1827	6	Nut

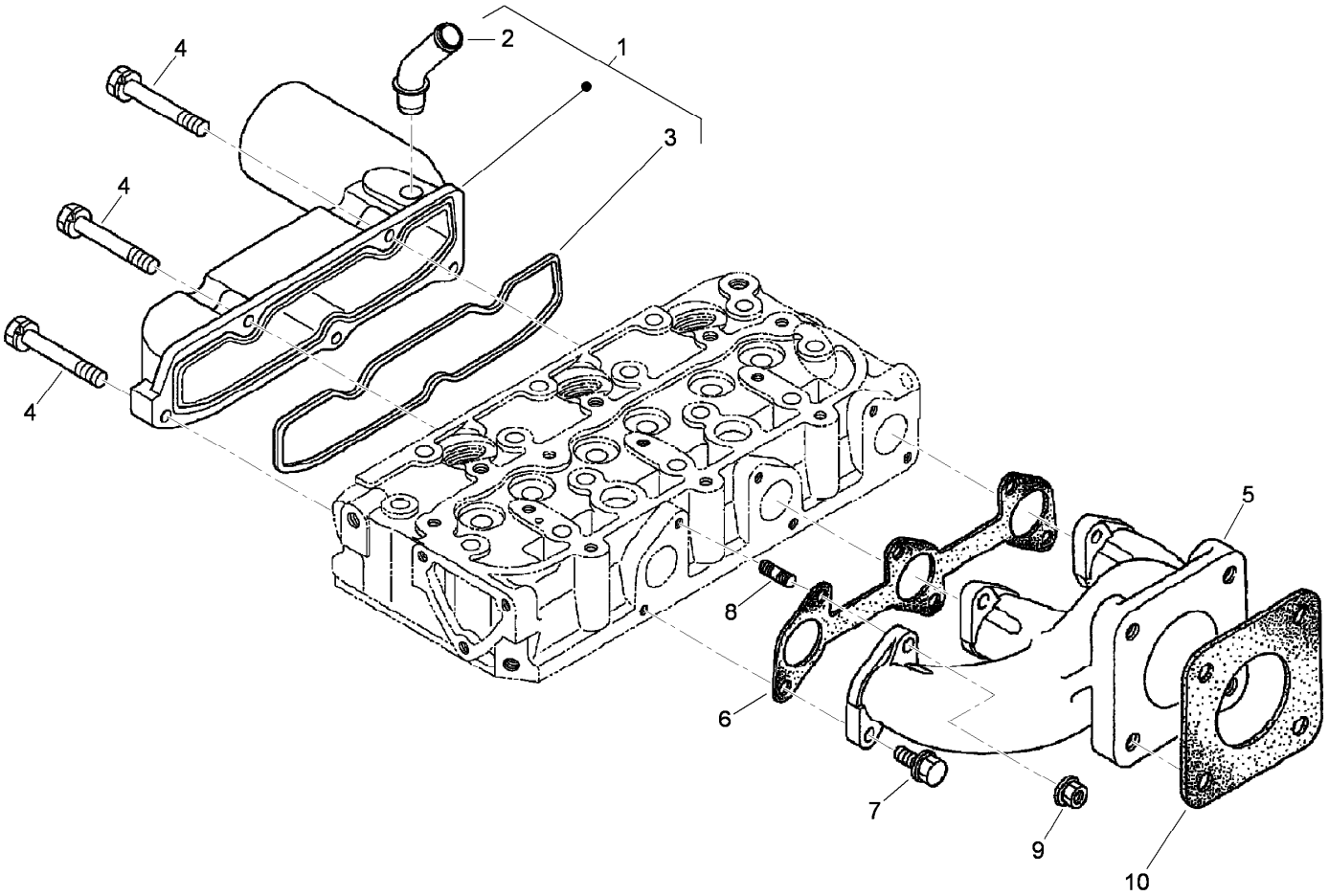

Inlet and Exhaust Manifold Assembly

Ref.	*Part Number*	*Qty.*	*Description*
1	110-3836	1	Inlet Manifold ASM
2	110-3837	1	Pipe-Breather
3	110-3838	1	Gasket-Manifold, Intake
4	98-9352	5	Bolt
5	110-3839	1	Manifold-Exhaust
6	110-3840	1	Gasket-Manifold, Exhaust
7	100-1775	3	Bolt
8	100-2202	3	Stud
9	100-1778	3	Nut
10	99-8343	1	Gasket-Muffler

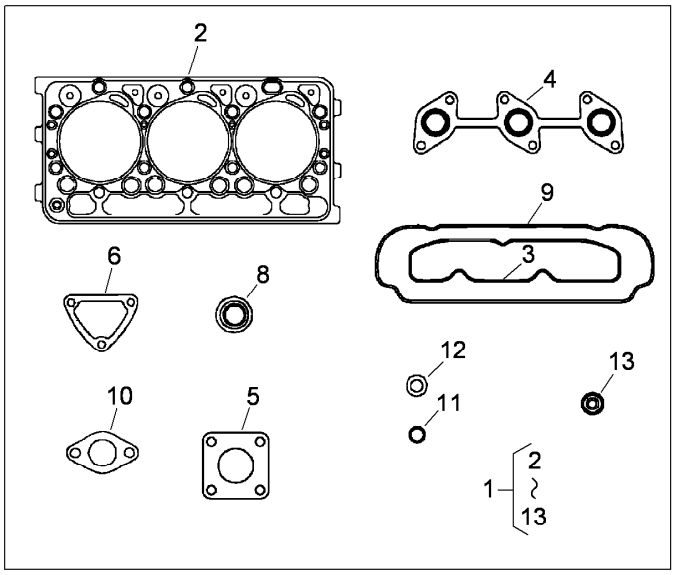

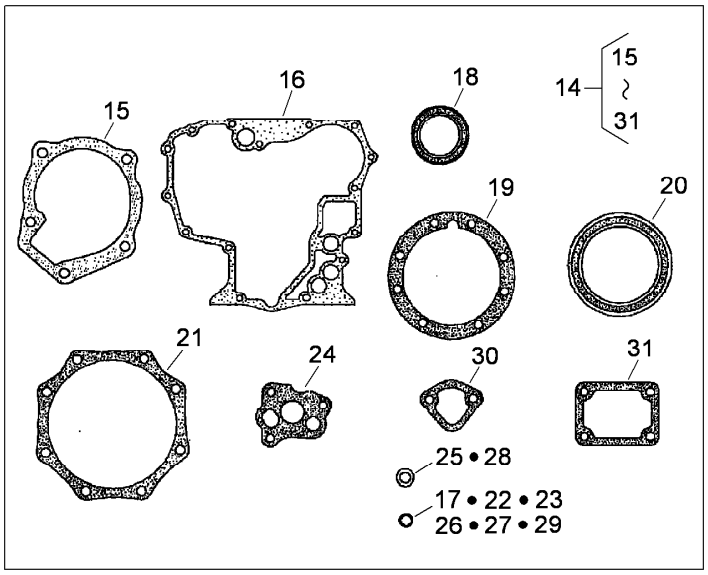

Upper and Lower Gasket Kits

Ref.	Part Number	Qty.	Description
1	112-2518	1	Upper Gasket Kit
2	112-2520	1	Gasket-Head, Cylinder
3	110-3838	1	Gasket-Manifold, Intake
4	110-3840	1	Gasket-Manifold, Exhaust
5	99-8343	1	Gasket-Muffler
6	110-3820	1	Gasket-Flange, Water
8	100-1797	6	Seal-Stem, Valve
9	112-2521	1	Gasket-Cover, Head
10	105-3748	1	Gasket-Thermostat
11	99-3446	1	O-Ring
12	98-7676	3	Gasket
13	98-7677	3	Seal-Heat
14	117-0324	1	Lower Gasket Kit
15	100-1976	1	Gasket-Pump, Water
16	110-3707	1	Case-Gear

Ref.	Part Number	Qty.	Description
17	110-3762	1	O-Ring
18	100-1971	1	Seal-Oil
19	117-0304	1	Gasket-Case, Bearing
20	110-3724	1	Seal-Oil
21	100-1876	1	Gasket-Cover, Case
22	100-2206	3	O-Ring
23	100-2209	1	O-Ring
24	100-2003	3	Gasket-Pump, Oil
25	98-7654	3	Gasket
26	100-2208	1	O-Ring
27	100-2207	1	O-Ring
28	110-9715	3	Gasket-Pan, Oil
29	105-3776	1	O-Ring
30	98-9636	1	Gasket-Pump, Fuel
31	100-1962	1	Gasket-Plate, Control

Attachments and Accessories

For 74274 Z Master With 72in TURBO FORCE Side Discharge Mower

Product Name	Model/Part
Z Stand Kit	105-1622
1.25in Spark Arrester Kit	105-1672
Blade-Mid Flow, 24.5in	105-7711-03
Blade-Lo Flow, 24.5in	105-7712-03
Blade-Atomic, 24.5in	105-7719-03
Blade-Recyler, 24.5in	105-7778-03
Blade-Hi Flow, 24.5in	105-7784-03
Recycler Kit	107-1612
Striping Kit	107-1630
Turbo Baffle Kit	107-1634
Light Kit	107-9880
6 Pack Blade, 24.5in Hi-Flow	108-1120
6 Pack Blade, 24.5in Atomic	108-1126
Roller Striping Kit	108-2162
6 Pack-Blade, 24.5in Mid-Flow	110-0404
6 Pack-Blade, 24.5in Lo-Flow	110-0410
6 Pack-Blade, 24.5in Recycler	110-0411
Hypr-Oil 500 (quart)	114-4713
Hypr-Oil 500 (gallon)	114-4714
Hypr-Oil 500-5 (5 gallon)	114-4715
Bimini Folding Shade Assembly	115-4510
Chute Gate Kit	78522
Deluxe Suspension Seat Kit	78530
Deck Triple Bag Assembly	78535
Blower and Drive Kit	78539
DFS E-Z Vac Bagger	78545
Filter Minder Gauge	99-4664
Hitch Kit	99-8925

Notes:

Notes:

Notes:

TORO®

Count on it.