FORM NO. 3323–112

TORO®

Carefree® Recycler® Mower

120V Electric

Model No. 20050 – 9900001 & Up

Parts Catalog

ORDERING REPLACEMENT PARTS

To order replacement parts, please supply: the part number, the quantity, and the description of each part desired.

Contents

Description	Page
Deck, Liner, & Wheel Assembly	1
Motor & Blade Assembly	2
Cover, Mulch Plug & Panel Assembly	3
Handle & Controls Assembly	4
Electrical Wiring Assembly	5
Electrical Wiring Schematic	6
Maintenance	7–9

Note:

Accessories

Description	Model / Parts No.	Description	Model / Parts No.

Part Description Abbreviations

Part descriptions in this catalog may include the following abbreviations.

Abbreviation	Meaning
AR	as required
ASM	assembly
CARR	carriage
DEG	degrees
FH	flat head
GA	gauge
HF	hex flange
HFW	hex flange washer
HH	hex head
HHF	hex head flange
HHST	hex head self tapping
HJ	hex jam
HOC	height-of-cut
HS	hex socket
HSBH	hex socket button head
HSFH	hex socket flat head
HSH	hex socket head
HWH	hex washer head
HWHTF	hex washer head thread forming
INC	incorporated
LH	left hand
PH	pan head
PPH	Phillips pan head
PTO	power take off
RH	right hand
SFH	slotted fillister head
SH	square head
SHWH	slotted hex washer head
SPH	slotted pan head
STD	standard
TAP	self tapping
TH	truss head
TTH	Torx truss head
WH	wing head

Important Format Explanations

This catalog uses special formats to convey information in illustrations and parts lists. Specifically, one format is used in conjunction with service assemblies and another with quantities associated with reference numbers.

© The TORO Company — 1999
All Rights Reserved

Service Assemblies

Parts within service assemblies have reference numbers in the form *X:Y. X* is the reference number of the service assembly and *Y* is a sequential number unique to each part within the service assembly.

For example, a wheel assembly might be identified by reference number 6, the tire by 6:1, the valve by 6:2, and the wheel by 6:3. When you order the assembly identified by reference number 6, you receive all parts identified by reference numbers 6:1, 6:2, and 6:3. However, you may also order any part individually.

Reference numbers of this type appear in part lists and as callouts in illustrations.

Reference Numbers with Quantities

Illustrations may have a quantity in parentheses next to a reference number, in the form *X (Y). X* is the reference number. *Y* in parentheses is the quantity of the part identified by the reference number.

For example, the illustration callout 4 (2) indicates that two parts are used in that instance.

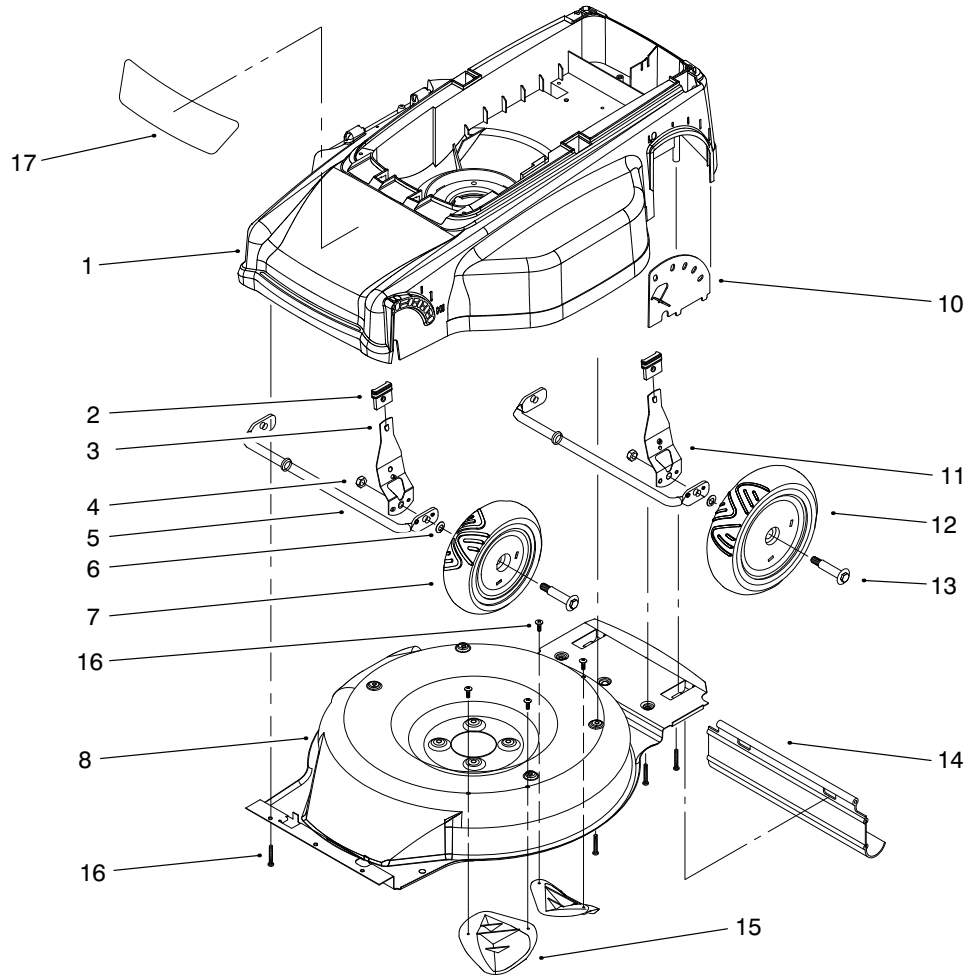

Sheet No.:2

Deck, Liner, & Wheel Assembly

Ref. No.	Part No.	Qty.	Description
1	94–3895	1	ASM – Toro Deck (Service)
2	92–1008	2	Knob–Height Adj. Lever
3	94–3870	1	ASM–HOC Lever, Front
4	610358	4	Nut–Jam, Locking
5	93–3952	2	Axle
6	40–1940	4	Washer–Wheel Bolt
7	92–9586	2	Assy – Wheel, 7”
8	95–5167	1	ASM–Liner Toro (Service)
9	93–3985	11	Screw – PH Pan
10	95–5037	1	Plate – HOC
11	94–3871	1	ASM–HOC Lever Rear
12	93–0344	2	Assy – Wheel, 8”
13	92–1057	4	Bolt–Shoulder
14	94–7417	1	Trailing Shield
15	76–2160	2	Kicker Plate
16	94–6961	4	Screw
17	99–6727	1	Decal Deck

Ref. No.	Part No.	Qty.	Description

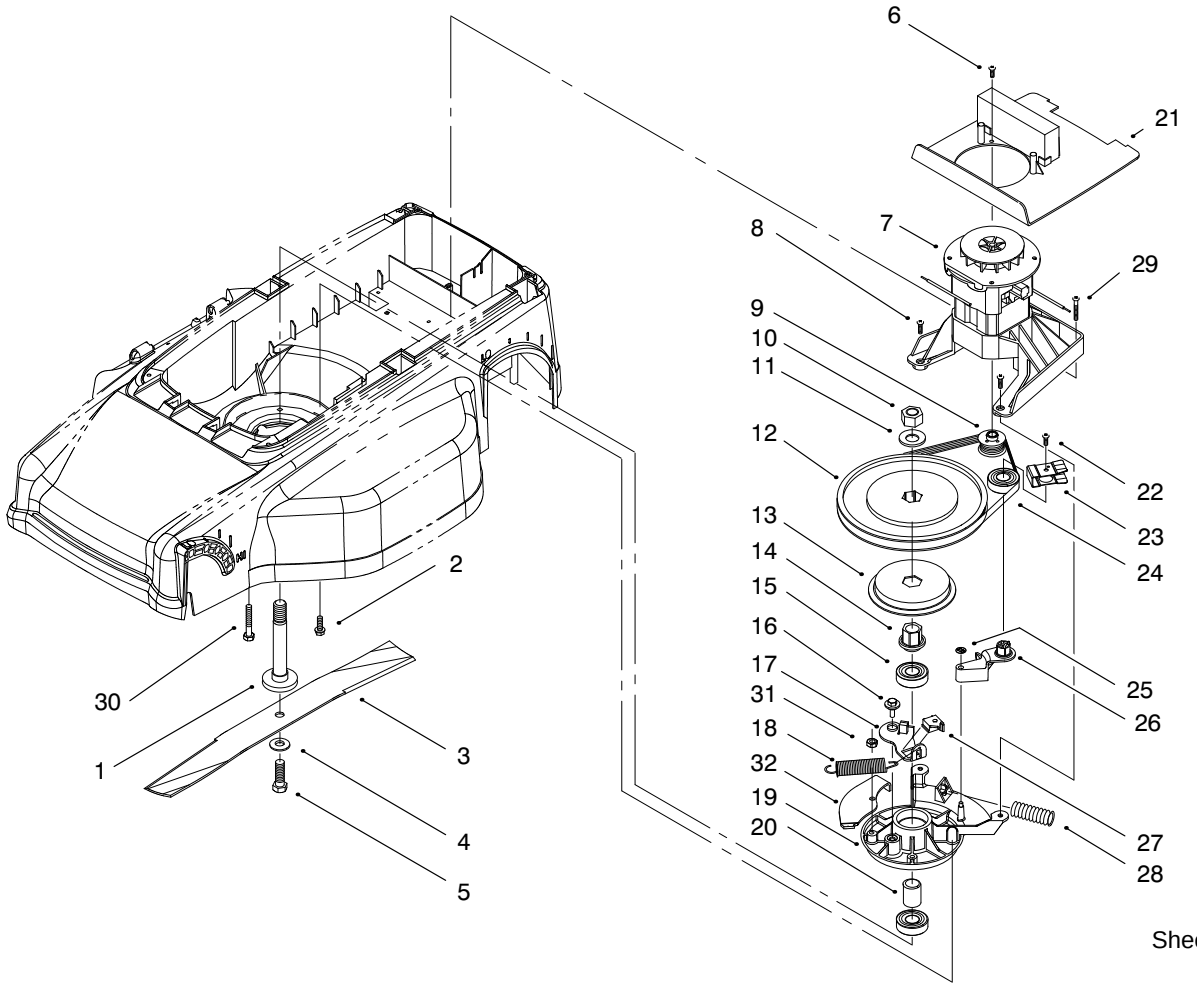

Sheet No.:3

Motor & Blade Assembly

Ref. No.	Part No.	Qty.	Description
1	93–3329	1	Shaft – Spindle
2	32144–44	3	Screw
3	93–3954	1	Blade – 17.5, 120v (Raw)
4	3290–465	1	Washer–Belleville
5	26–0671	1	Screw–Blade
6	94–4496	4	Screw–Pan Hd
7	94–6917	1	ASM – Motor 120v (Service)
8	32144–8	2	Screw–HH
9	93–3331	1	Pulley – Motor
10	3219–6	1	Nut–Hex
11	3256–27	1	Washer–Flat
12	93–3321	1	Pulley – Driven
13	93–3328	1	Drum – Brake
14	93–3330	1	Hub – Pulley
15	61–8780	3	Ball Bearing
16	92–9698	1	Screw–Shoulder V
17	93–3991	1	Brake Lever Assy
18	93–3995	1	Spring – Brake Switch
19	93–3325	1	Spindle
20	93–3980	1	Spacer – Bearing
21	94–3873	1	ASM – Baffle Toro
22	94–6961	1	Screw
23	94–3866	1	Guide – Belt
24	93–3989	1	Belt – Poly V, J5 28”

Ref. No.	Part No.	Qty.	Description
25	93–3988	1	Pushnut – 3/16” Tinner
26	93–3323	1	Idler Arm
27	93–3322	1	Mount – Cable
28	61–8880	1	Idler Arm Spring
29	93–3985	2	Screw – PH Pan
30	32144–110	1	Screw–HWH
31	3296–56	1	Nut–Lock Ni
32	94–9155	1	Bracket – Spring

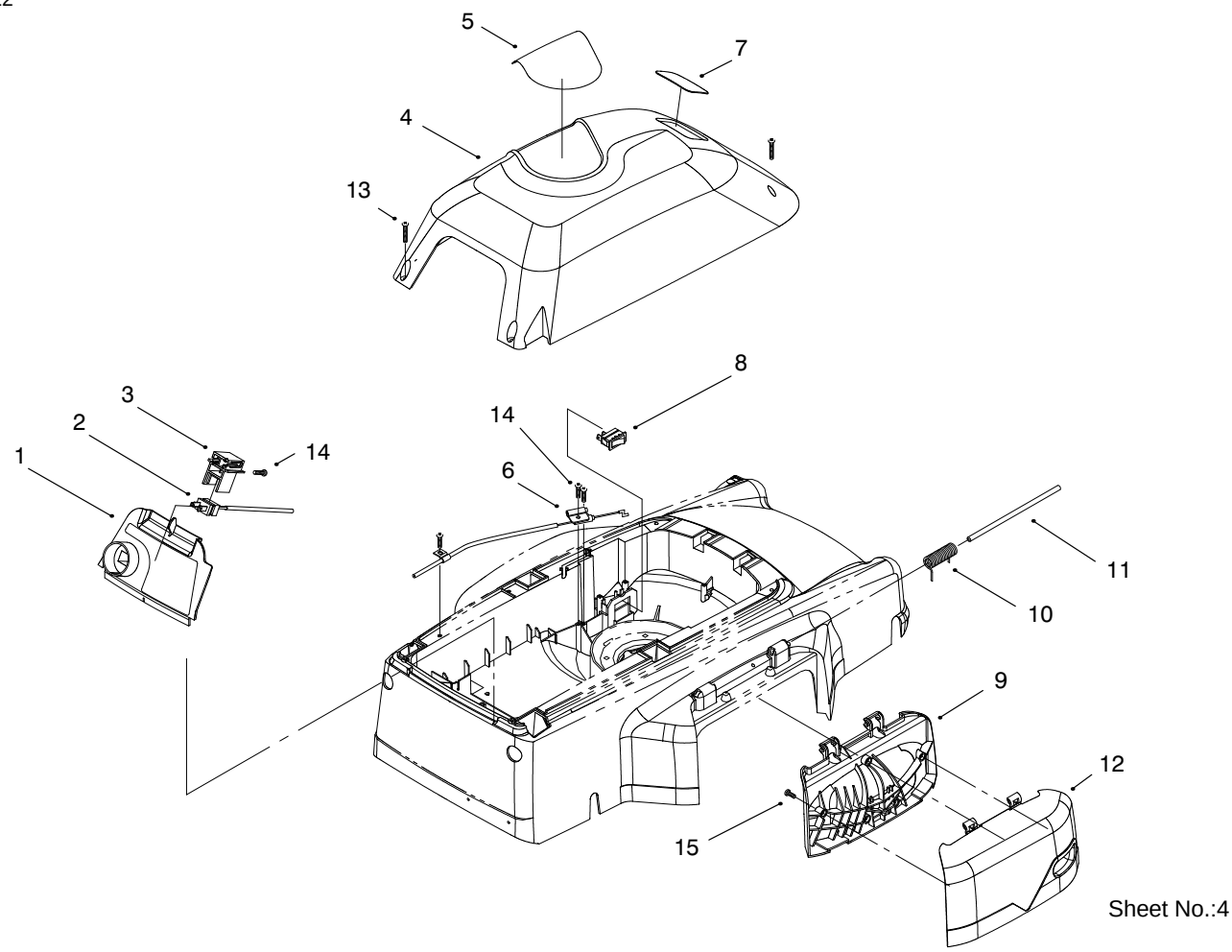

Sheet No.:4

Cover, Mulch Plug & Panel Assembly

Ref. No.	Part No.	Qty.	Description
1	94–3880	1	ASM – Panel 120v Toro
2	93–3979	1	Plug – 120v
3	93–3344	1	Housing – Plug
4	94–3898	1	ASM – Cover Toro 120v (Service)
5	98–1490	1	Decal – 120 Volt
6	93–3975	1	Bracket – Cable
7	92–2289	1	Plate – Logo
8	94–3886	1	Switch 120v Arco
9	93–3956	1	Mulch Plug – Inside
10	94–3865	1	Spring – Torsion
11	93–3990	1	Pin – Hinge, Mlch Plg
12	93–3957	1	Mulch Plug – Outside
13	93–3986	4	Screw – PPH
14	94–4496	4	Screw–Pan Hd
15	94–6961	5	Screw

Ref. No.	Part No.	Qty.	Description

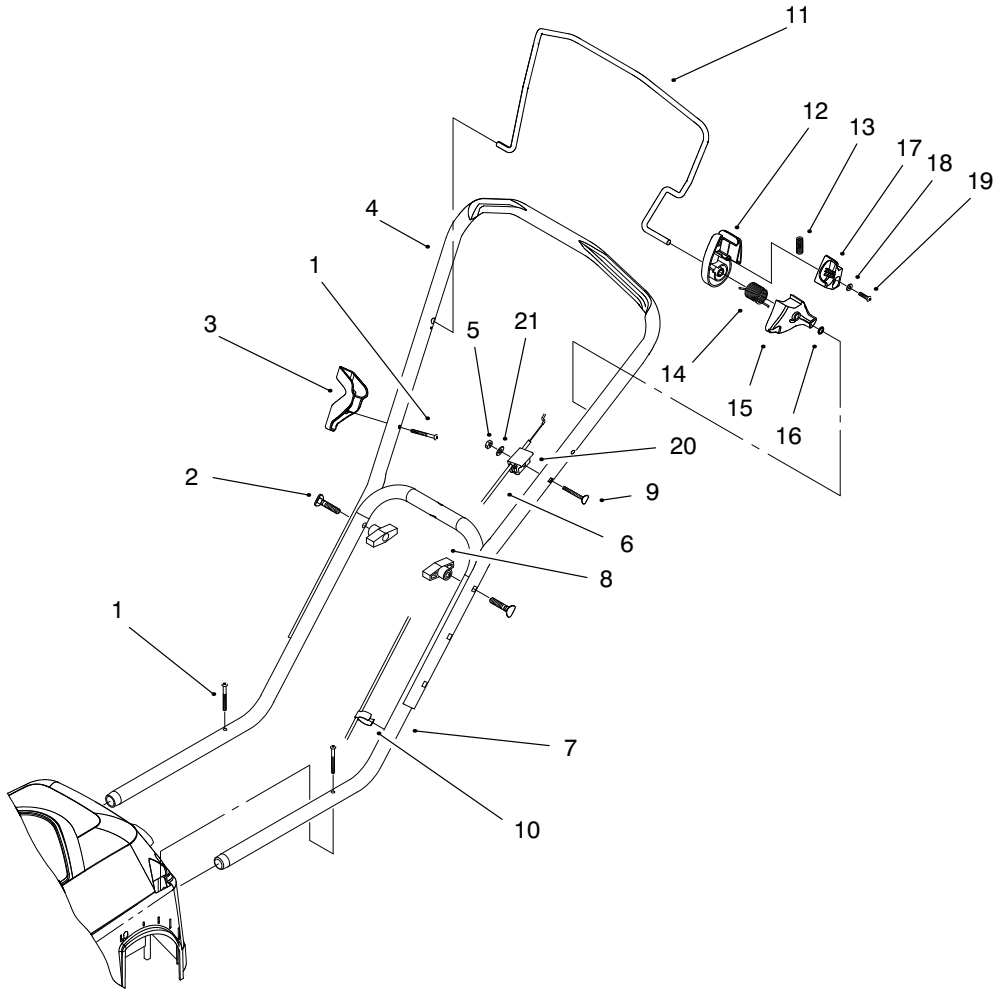

Sheet No.:5

Handle & Controls Assembly

Ref. No.	Part No.	Qty.	Description
1	93–3986	3	Screw – PPH
2	92–2260	2	Screw–Handle
3	93–3996	1	Lock – Cord
4	95–2742–05	1	Handle – Upper
5	3296–8	1	Nut–Lock Ni
6	93–3978	1	Cable – Control
7	93–3972–05	1	Handle – Lower
8	98–7134	2	Knob–Handle
9	92–2269	1	Screw–Handle
10	94–7409	1	Clip – Cable
11	95–3000–03	1	Bail – Comfortgrip
12	93–3969	1	Housing – Bail
13	94–3851	1	Spring – Comp Slide
14	94–1154	1	Spring – Bail
15	93–3967	1	Cam
16	94–1191	1	Nut – Push
17	93–3968	1	Slide
18	94–3868	1	Washer – Flat
19	94–4496	1	Screw–Pan Hd
20	94–7407	1	Support – Cable
21	3256–2	1	Washer–Flat

Ref. No.	Part No.	Qty.	Description

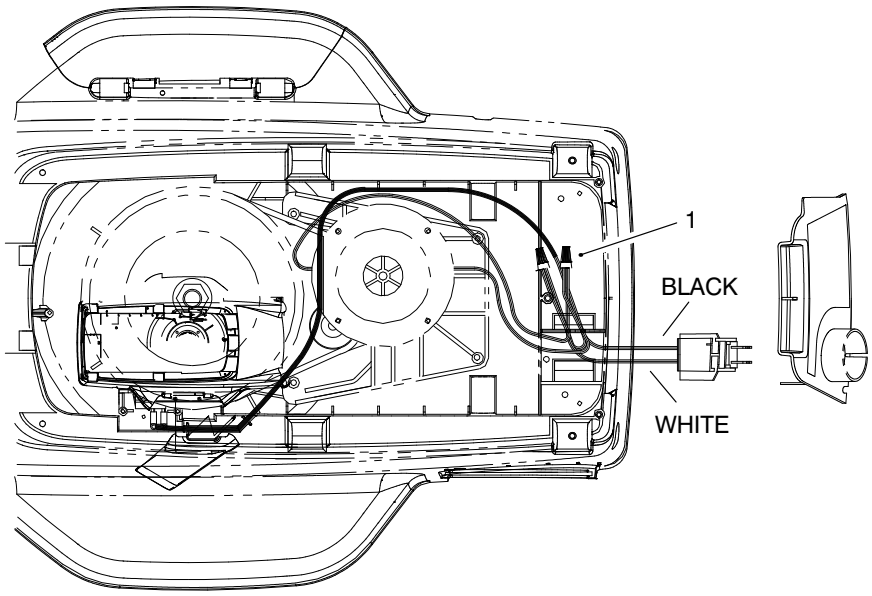

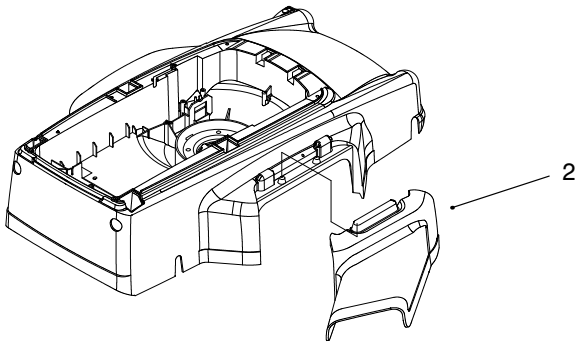

Sheet No.:6

Electrical Wiring Assembly

Ref. No.	Part No.	Qty.	Description
1	73–6570	2	Connector–Wire Nut
2	93–3963	1	Chute – Side

Ref. No.	Part No.	Qty.	Description

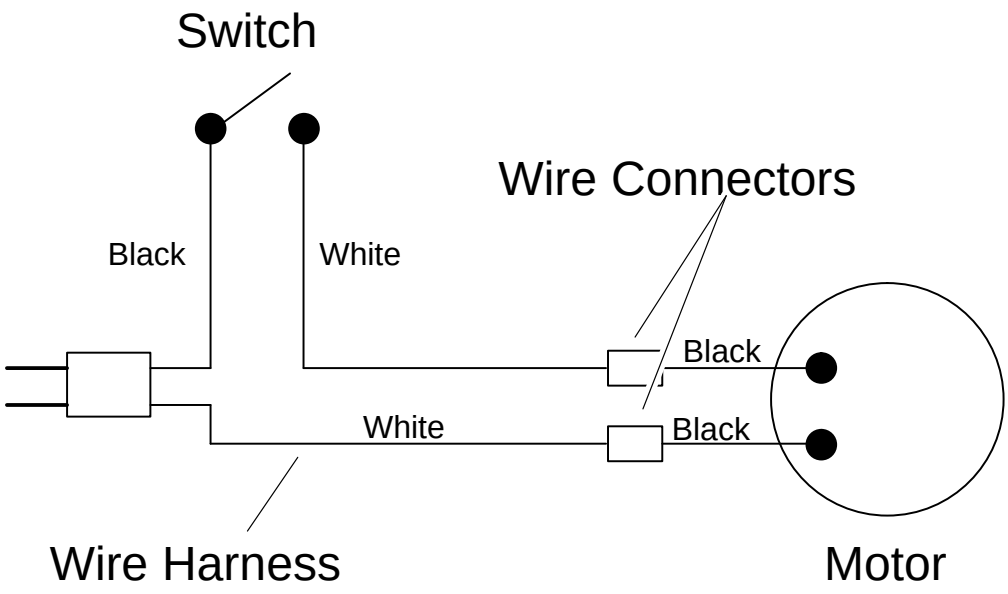

Electrical Wiring Schematic

Ref. No.	Part No.	Qty.	Description

Ref. No.	Part No.	Qty.	Description

MAINTENANCE RECORD

Date								

MAINTENANCE RECORD

Date								

MAINTENANCE RECORD

Date								