Form No. 3323-130

TORO®

48 cm Recycler®

Walk Power Lawn Mower

Model No. 20812-200000001 and Up
Model No. 20813-200000001 and Up

PROTOTYPE

Operator's Manual

Contents

	Page
Introduction	2
Safety	3
General Lawn Mower Safety	3
Safety and Instruction Decals	5
Assembly	5
Unpacking the Lawn Mower	5
Installing the Handle	6
Installing the Starter Rope	6
Adjusting the Handle Height	6
Assembling the Grass Bag	7
Before Starting	8
Filling the Crankcase with Oil	8
Filling the Fuel Tank with Gasoline	8
Operation	9
Controls	9
Starting the Engine	10
Stopping the Engine	10
Using the Self-propel Drive	10
Adjusting the Cutting Height	11
Using the Grass Bag	11
Installing the Recycler Plug	12
Rear Discharge	13
Operating Tips	13
Maintenance	14
Recommended Maintenance Schedule	14
Checking the Engine Oil Level	15
Changing the Engine Oil	15
Cleaning the Underside of the Lawn Mower Housing	16
Servicing the Air Filter	17
Maintaining the Blade	17
Lubricating the Self-propel Drive	19
Adjusting the Self-propel Drive Cable	19
Cleaning under the Belt Cover	20
Servicing the Spark Plug	20
Cleaning the Cooling System	20
Cleaning the Recycler Plug and the Discharge Tunnel	20
Emptying the Fuel Tank	20
Troubleshooting	21
Storage	22
Preparing the Fuel System	22
Preparing the Engine	22
General Information	22
Folding the Handle	22
Removing from Storage	23

Introduction

Thank you for choosing a Toro product. We want you to be completely satisfied with your new purchase.

Read this manual carefully to learn how to operate and maintain your product properly. The information in this manual can help you and others avoid injury and product damage. Although Toro designs and produces safe products, you are responsible for operating the product properly and safely.

Whenever you contact your Authorized Service Dealer or the factory for help with service, genuine Toro parts, or additional information, have the model number and the serial number of your product handy. You will find the model number and serial number decal on the product as illustrated in Figure 1.

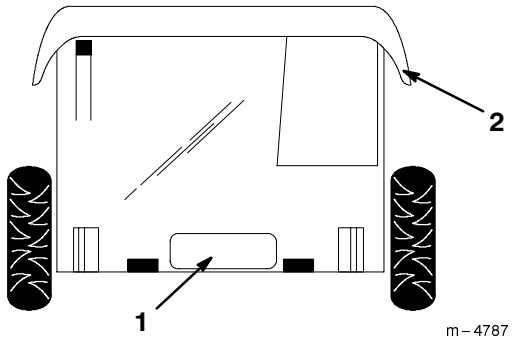

Figure 1

1. Model number and serial number decal
2. Rear door

Write the product model number and serial number in the space below:

Model No. _____

Serial No. _____

PROTOTYPE

This manual identifies potential hazards and has special safety messages that help you and others avoid personal injury and even death. DANGER, WARNING, and CAUTION are words used to identify the level of hazard.

DANGER signals an extreme hazard that will cause serious injury or death if you do not follow the recommended precautions.

WARNING signals a hazard that may cause serious injury or death if you do not follow the recommended precautions.

©1999 **The Toro Company**
All Rights Reserved

Printed in USA

CAUTION signals a hazard that may cause minor or moderate injury if you do not follow the recommended precautions.

This manual uses two other words to highlight information. **Important** calls attention to special mechanical information and **Note** emphasizes general information worthy of special attention.

Safety

Toro designed this lawn mower for cutting and recycling grass, or, when equipped with a grass bag, for catching cut grass. Any use for purposes other than these could prove dangerous to the operator or to bystanders.

To ensure maximum safety, best performance, and to gain knowledge of the product, it is essential that you and any other operator of the lawn mower read and understand the contents of this manual before the motor is ever started. Pay particular attention to the safety alert symbol ⚠ which means CAUTION, WARNING, OR DANGER — "personal safety instruction." Read and understand the instruction because it has to do with safety. Failure to comply with instruction may result in personal injury.

General Lawn Mower Safety

The following instructions have been adapted from the ANSI/OPEI standard B71.1—1998 and ISO standard 5395:1990(E). Information or terminology specific to Toro lawn mowers is enclosed in parenthesis.

This cutting machine is capable of amputating hands and feet and throwing objects. Failure to observe the following safety instructions could result in serious injury or death.

Training

- Read the instructions carefully. Be familiar with the controls and the proper use of the equipment before starting.
- See manufacturer's instructions for proper operation and installation of accessories. Only use accessories approved by the manufacturer.
- Never allow children or people unfamiliar with these instructions to use the mower. Local regulations may restrict the age of the operator.
- Never mow while people, especially children, or pets are nearby. Stop mower if anyone enters the area.

Tragic accidents can occur if the operator is not alert to the presence of children. Children are often attracted to the mower and the mowing activity. **Never** assume that children will remain where you last saw them.

- Keep children out of the mowing area and under the watchful care of a responsible adult.
- Be alert and turn mower off if children enter the area.
- Use extra care when approaching blind corners, shrubs, trees, or other objects that may obscure vision.
- Keep in mind that the operator or user is responsible for accidents or hazards occurring to other people or their property.

Preparation

- While mowing, always wear substantial footwear and long trousers.
- Do not operate the equipment when barefoot or wearing open sandals.
- Always wear safety goggles or safety glasses with side shields when operating mower.
- Thoroughly inspect the area where the equipment is to be used and remove all stones, sticks, wires, bones, and other foreign objects.
- **Warning: Gasoline is highly flammable.** Take the following precautions:
  - Store fuel in containers specifically designed for this purpose.
  - Refuel outdoors only and do not smoke while refuelling.
  - Add fuel before starting the engine. Never remove the cap of the fuel tank or add gasoline while the engine is running or when the engine is hot.
  - If gasoline is spilled, do not attempt to start the engine but move the machine away from the area of spillage and avoid creating any source of ignition until gasoline vapors have dissipated.
  - Replace all fuel tank and container caps securely.
  - If the fuel tank has to be drained, do this outdoors.
- Replace faulty mufflers.
- Before using, always visually inspect to see that the blades, blade bolts, and cutter assembly are not worn or damaged. Replace worn or damaged blades and bolts in sets to preserve balance.
- On multibladed machines, take care as rotating one blade can cause other blades to rotate.

Operation

- Do not operate the engine in a confined space where dangerous carbon monoxide fumes can collect.
- Mow only in daylight or in good artificial light.

PROTOTYPE

- Always be sure of your footing on slopes.
- Walk; never run.
- Keep a firm hold on the handle.
- For wheeled rotary machines, mow across the face of slopes, never up and down.
- Exercise extreme caution when changing direction on slopes.
- Do not mow excessively steep slopes.
- Use extreme caution when reversing or pulling the mower towards you.
- Before and while moving backwards, look behind and down for small children.
- Stop the blade(s) if the mower has to be tilted for transportation when crossing surfaces other than grass and when transporting the mower to and from the area to be mowed.
- Never operate the mower with damaged or missing guards or shields, or without safety devices; for example, deflectors and/or grass catchers in place.
- Do not change the engine governor settings or overspeed the engine.
- Disengage all blade and drive clutches before starting the engine.
- Start the engine or switch on the motor carefully according to instructions and with feet well away from the blade(s).
- Do not tilt when starting the engine or switching on the motor, unless the mower has to be tilted for starting. In this case, do not tilt it more than absolutely necessary and lift only the part which is away from the operator.
- Do not start the engine when standing in front of the discharge chute.
- Do not put hands or feet near or under rotating parts. Keep clear of the discharge opening at all times.
- Never pick up or carry a mower while the engine is running.
- Stop the engine and disconnect the spark plug lead
  - before clearing blockages or unclogging chute;
  - before checking, cleaning, or working on the mower;
  - after striking a foreign object. Inspect the mower for damage and make repairs before restarting and operating the mower;
  - if mower starts to vibrate abnormally (check immediately).
- Stop the engine
  - whenever you leave the mower;
  - before refuelling.
- Reduce the throttle setting during engine run-out and, if the engine is provided with a shut-off valve, turn the fuel off at the conclusion of mowing.
- Stop the blade(s) when crossing gravel drives, walks, or roads.
- Shut the engine (motor) off and wait until the blade comes to complete stop before removing grass catcher.
- Do not operate the mower while under the influence of alcohol or drugs.
- If the equipment should start to vibrate abnormally, stop the engine (motor) and check immediately for the cause. Vibration is generally a warning of trouble.

Slopes are a major factor related to slip and fall accidents which can result in a severe injury. If you feel uneasy on a slope, do not mow it.

- Watch for holes, ruts, or bumps. Tall grass can hide obstacles.
- **Do not** mow near drop-offs, ditches, or embankments. The operator could lose footing or balance.
- **Do not** mow on wet grass. Reduced footing could cause slipping.

Maintenance and Storage

- Keep all nuts, bolts (especially blade attachment bolts), and screws tight to be sure the equipment is in safe working condition.
- Never store the equipment with gasoline in the tank inside a building where fumes may reach an open flame or spark.
- Allow the engine to cool before storing in any enclosure.
- To reduce the fire hazard, keep the engine, muffler, battery compartment, and gasoline storage area free of grass, leaves, or excessive grease.
- Check the grass catcher frequently for wear or deterioration.
- Replace worn or damaged parts for safety.
- Use extra care when handling gasoline; vapors are explosive.
- Never tamper with safety devices. Check their proper operation regularly.
- Keep the mower free of grass, leaves, or other debris build-up. Clean up oil or fuel spillage.

PROTOTYPE

- Stop and inspect the equipment if you strike an object. Repair, if necessary, before restarting.
- Never attempt to make wheel height adjustments while the engine (motor) is running.
- Always disconnect electric mowers (live operated) before cleaning, repairing, or adjusting.
- Grass catcher components are subject to wear, damage, and deterioration, which could expose moving parts or allow objects to be thrown. Frequently check components and replace with manufacturer's recommended parts when necessary.
- Mower blades are sharp and can cut. Wrap the blade(s) or wear gloves, and use extra caution when servicing them.
- Do not change the engine governor setting or overspeed the engine.
- To ensure the best performance and safety, purchase only genuine Toro replacement parts and accessories. **Do not use "will fit" parts and accessories; they may cause a safety hazard.**

Safety and Instruction Decals

Safety decals and instructions are easily visible to the operator and are located near any area of potential danger. Replace any decal that is damaged or lost.



On Rear Door
(Part No. 93-4105)

Assembly

Note: Determine the left and right sides of the lawn mower by standing in the operating position.

Unpacking the Lawn Mower

1. Remove the fillers from the box.
2. Remove the grass bag from the box, and set it aside for future use.
3. Carefully remove the lawn mower from the box.

WARNING

POTENTIAL HAZARD
- **Folding or unfolding the handle improperly can pinch, stretch, or damage one or more of the cables.**

WHAT CAN HAPPEN
- **Any pinched, stretched, or damaged cable may cause an operational failure that results in an unsafe operating condition.**

HOW TO AVOID THE HAZARD
- **Do not pinch, stretch, or damage the cables.**
- **Handle the cables with care when folding or unfolding the handle.**
- **Do not use the lawn mower if one or more of the cables are pinched, stretched, or damaged. Contact your Authorized Service Dealer.**

PROTOTYPE

4. Lay the upper handle on the ground behind the lawn mower with the handle label facing up.

Installing the Handle

WARNING

POTENTIAL HAZARD

- **Folding or unfolding the handle improperly can pinch, stretch, or damage one or more of the cables.**

WHAT CAN HAPPEN

- **Any pinched, stretched, or damaged cable may cause an operational failure that results in an unsafe operating condition.**

HOW TO AVOID THE HAZARD

- **Do not pinch, stretch, or damage the cables.**
- **Handle the cables with care when folding or unfolding the handle.**
- **Do not use the lawn mower if one or more of the cables are pinched, stretched, or damaged. Contact your Authorized Service Dealer.**

1. Loosen the handle height adjustment knobs and rotate the lower handle toward the rear of the lawn mower until it seats into one of the handle height settings as shown in Figure 2 on page 6. To set the handle height, refer to *Adjusting the Handle Height* on page 6.
2. Remove the handle knobs and the oval head bolts from the upper handle section.
3. Install the upper handle section onto the lower handle section with the oval head bolts and the handle knobs as shown in Figure 2. **Tighten the handle knobs securely.**

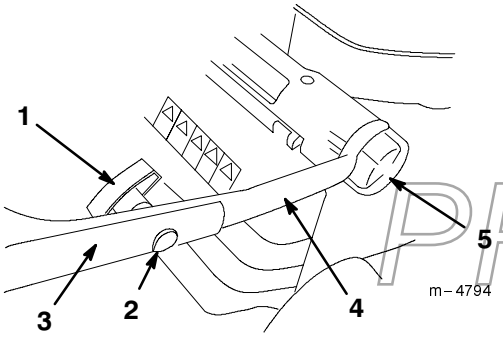

Figure 2

1. Handle knob (2)
2. Oval head bolt (2)
3. Upper handle section
4. Lower handle section
5. Handle height adjustment knob (2)

Installing the Starter Rope

Pull the starter rope through the rope guide on the handle (Fig. 3).

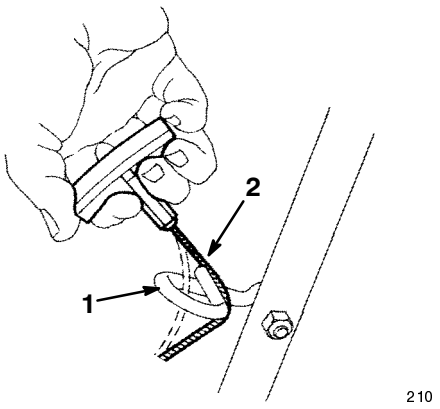

Figure 3

1. Rope guide
2. Starter rope

Adjusting the Handle Height

You can set the handle to three height settings: high, medium, and low (Fig. 2). Select the handle height setting most comfortable for you.

1. Loosen the handle height adjustment knobs.
2. Set the handle to the desired position.
3. Tighten the handle height adjustment knobs.

Assembling the Grass Bag

1. Insert the grass bag frame into the grass bag as shown in Figure 4.

PROTOTYPE

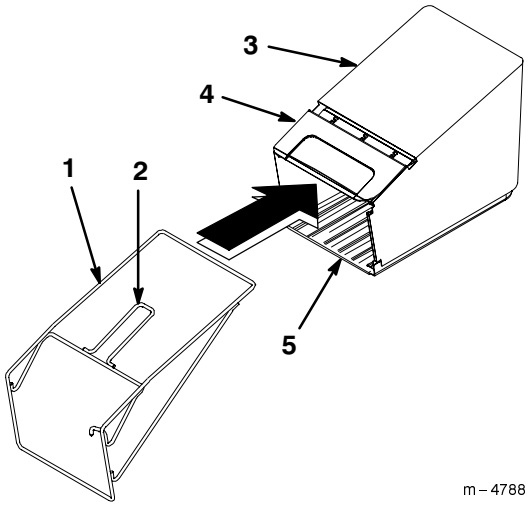

Figure 4

1. Grass bag frame
2. Bag handle
3. Grass bag
4. Bag cover
5. Bag base

Note: Make sure that the bag handle is on the outside of the bag.

2. Position the bag cover on top of the frame as shown in Figure 4.

3. Snap the top frame bar into the three snap fittings on the bag cover as shown in Figure 5.

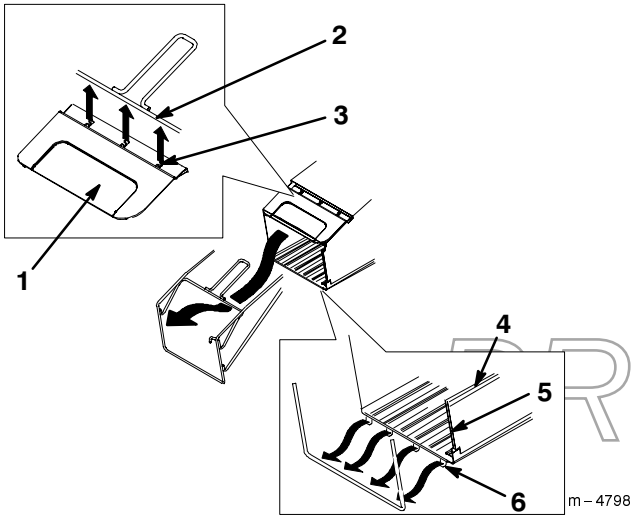

Figure 5

1. Bag cover
2. Top frame bar
3. Bag cover snap fitting (3)
4. Top channel (2)
5. Side channel (2)
6. Bag base snap fitting (4)

4. Insert the two side channels and two top channels of the grass bag onto the grass bag frame as shown in Figure 5.

Note: To insert the channels onto the grass bag frame, start on one end of the channel and push it onto the frame.

5. Snap the bottom frame bar into the four snap fittings on the bag base as shown in Figure 5.

Note: Make sure the sides of the bag base are **inside** the bag frame as shown in Figure 6.

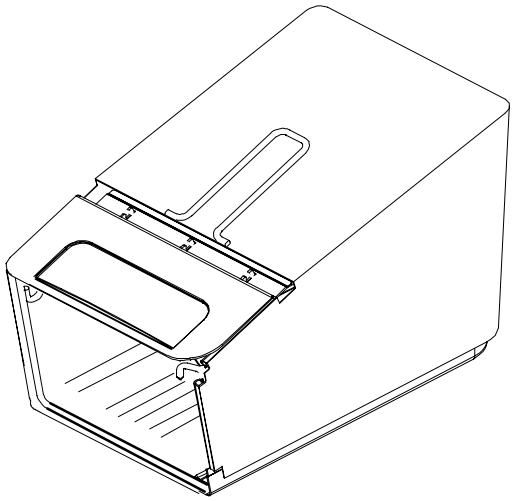

Figure 6

Before Starting

Filling the Crankcase with Oil

The crankcase can hold 20 ounces (0.59 liters) of oil. Use only high-quality, SAE 30 or 10W30 weight detergent oil that has the American Petroleum Institute (API) "service classification" — SF, SG, SH, or SJ.

Before each use, make sure that the oil level is between the *Add* and the *Full* marks on the dipstick (Fig. 7).

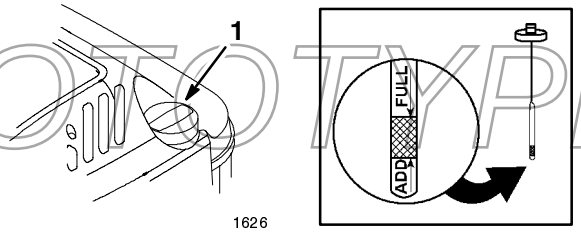

Figure 7

1. Oil fill cap
2. Dipstick

To add oil:

1. Move the lawn mower to a level surface.

2. Clean around the dipstick (Fig. 7).

3. Remove the dipstick by rotating the cap counterclockwise 1/4 turn and pulling it out.

PROTOTYPE

4. Wipe the dipstick clean with a clean cloth.

5. Fully insert the dipstick into the filler neck, then remove it.

Note: To ensure an accurate oil level reading, you must fully install the dipstick.

6. Read the oil level on the dipstick (Fig. 7).

7. If the oil level reading is below the *Add* mark on the dipstick, **slowly** pour only enough oil into the filler hole to raise the oil level to the *Full* mark on the dipstick.

IMPORTANT: Do not overfill the crankcase with oil and run the engine; engine damage will result. Drain the excess oil until the oil level on the dipstick reads *Full*.

8. Insert the dipstick into the filler neck and rotate the cap clockwise 1/4 turn.

Filling the Fuel Tank with Gasoline

For best results, use clean, fresh, lead-free gasoline, including *oxygenated* or *reformulated* gasoline, with an octane rating of 87 or higher. To ensure freshness, purchase only the quantity of gasoline that you expect to use in 30 days. Using unleaded gasoline results in fewer combustion deposits and longer engine life. You may use leaded gasoline if unleaded gasoline is not available.

IMPORTANT: Do not add oil to the gasoline.

IMPORTANT: Do not use methanol, gasoline containing methanol, gasohol containing more than 10% ethanol, premium gasoline, or white gas. Using these fuels can damage the engine's fuel system.

IMPORTANT: Do not use gasoline that has been stored since the last mowing season or longer.

DANGER

POTENTIAL HAZARD
- **In certain conditions, gasoline is extremely flammable and highly explosive.**

WHAT CAN HAPPEN
- **A fire or explosion from gasoline can burn you and others and can damage property.**

HOW TO AVOID THE HAZARD
- **Use a funnel and fill the fuel tank outdoors, in an open area, and when the engine is cold. Wipe up any gasoline that spills.**
- **Do not fill the fuel tank completely full. Add gasoline to the fuel tank until the level is 1/4 to 1/2 inch (6 to 13 mm) below the bottom of the filler neck. This empty space in the tank allows gasoline to expand.**
- **Never smoke when handling gasoline, and stay away from an open flame or where a spark may ignite the gasoline fumes.**
- **Store gasoline in an approved container and keep it out of the reach of children.**
- **Never buy more than a 30-day supply of gasoline.**

PROTOTYPE

DANGER

POTENTIAL HAZARD
- **When fueling, under certain circumstances, a static charge can develop, igniting the gasoline.**

WHAT CAN HAPPEN
- **A fire or explosion from gasoline can burn you and others and damage property.**

HOW TO AVOID THE HAZARD
- **Always place gasoline containers on the ground away from your vehicle before filling.**
- **Do not fill gasoline containers inside a vehicle or on a truck or trailer bed because interior carpets or plastic truck bed liners may insulate the container and slow the loss of any static charge.**
- **When practical, remove gasoline-powered equipment from the truck or trailer and refuel the equipment with its wheels on the round.**
- **If this is not possible, then refuel such equipment on a truck or trailer from a portable container, rather than from a gasoline dispenser nozzle.**
- **If you must use a gasoline dispenser nozzle, keep the nozzle in contact with the rim of the fuel tank or container opening at all times until fueling is complete.**

Use a fuel stabilizer/conditioner regularly during operation and storage. A stabilizer/conditioner cleans the engine during operation and prevents gum-like varnish deposits from forming in the engine during periods of storage.

IMPORTANT: Do not use fuel additives other than a fuel stabilizer/conditioner. Do not use fuel stabilizers with an alcohol base such as ethanol, methanol, or isopropanol.

1. Disconnect the wire from the spark plug (Fig. 8).

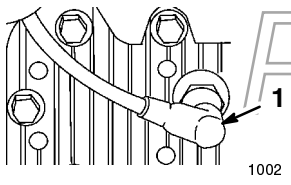

Figure 8

1. Spark plug wire

2. Clean around the fuel tank cap (Fig. 9).

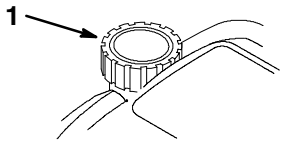

Figure 9

1. Fuel tank cap
2. Primer

3. Remove the cap from the tank.

4. Fill the fuel tank with unleaded gasoline to within 1/4 to 1/2 inch (6 to 13 mm) from the top of the tank. **Do not fill into the filler neck.**

5. Install the fuel tank cap and wipe up any spilled gasoline.

Operation

Each time before you mow, make sure that the self-propelled drive (self-propelled model only) and the blade control bail operate properly. When you release the blade control bail, the engine and the self-propel drive should stop. If they do not, contact an Authorized Service Dealer.

Controls

The starter handle and the blade control bail are on the upper handle as shown in Figure 10.

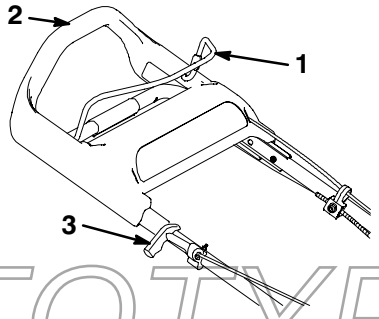

Figure 10

1. Blade control bail
2. Upper handle
3. Starter handle

Starting the Engine

1. Connect the wire to the spark plug (Fig. 8).

PROTOTYPE

2. Push the primer three times, waiting two seconds between each push (Fig. 11).

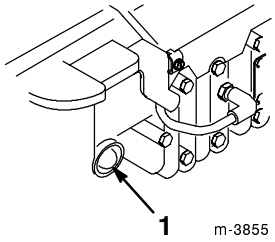

Figure 11

1. Primer

Note: If the temperature is 55°F (13°C) or below, push the primer five times, waiting two seconds between each push.

Note: Do not use the primer to start a warm engine after a brief shutdown. However, cool weather may require you to prime the engine again.

3. Hold the blade control bail against the upper handle (Fig. 12).

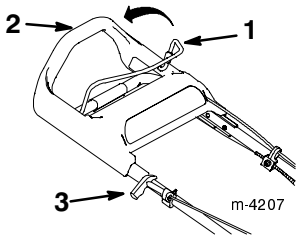

Figure 12

1. Blade control bail
2. Upper handle
3. Starter handle

---

4. Pull the starter handle lightly until you feel resistance, then pull it sharply (Fig. 12). Allow the rope return to the handle slowly.

Note: Allow the engine to warm up for at least one minute; longer in cooler temperatures.

Note: If the engine fails to start after three attempts, repeat steps 2 through 4.

Stopping the Engine

Release the blade control bail. Both the engine and the blade should stop. If they do not stop properly, contact your Authorized Service Dealer.

Using the Self-propel Drive

Self-propelled Model only

To operate the self-propel drive, simply walk forward with your hands on the upper handle. As you move forward, the upper handle will slide toward the lawn mower, activating the self-propelled drive. The faster you walk, the farther the handle will slide and the faster the lawn mower will propel (Fig. 13).

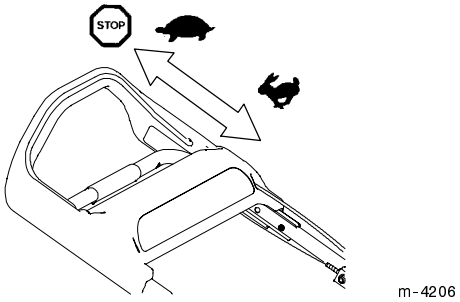

Figure 13

Note: The lawn mower propels at the maximum speed when you push in the upper handle as far forward as possible.

To slow down the drive, simply slow your walking speed; to stop the drive, stop walking (Fig. 13).

Note: If, when backing up after self-propelling, the lawn mower does not roll backward freely, nudge the lawn mower forward about an inch without engaging the self-propel drive, then pull the lawn mower backward.

Adjusting the Cutting Height

The *SmartWheel™* has two cutting scales: *Sparse*/*Normal* and *Lush*—to ensure the best cutting height setting in any mowing condition (Fig. 14). Use the *Sparse*/*Normal* scale during the warm summer season for the majority of your mowing. The *Lush* scale is for thick, moist, and succulent grass that grows most often in the spring.

PROTOTYPE

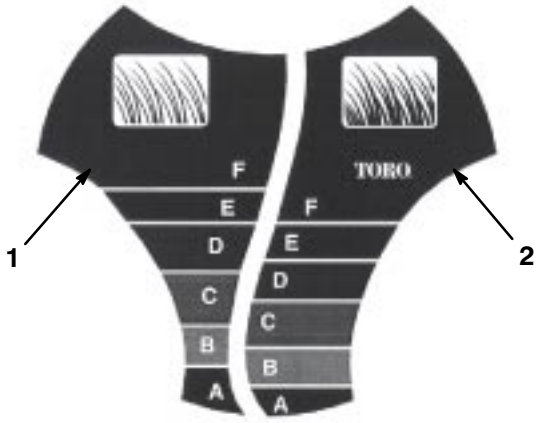

Figure 14

1. Sparse/normal grass cutting scale
2. Lush grass cutting scale

Toro recommends the following:

- Cut the grass at the *D*, *E*, or *F* settings or keep the grass between 2 to 3 inch (5.1 to 7.6 cm) high.
- Do not cut below the *D* setting unless the grass is sparse or it is late fall when grass growth begins to slow down. When you cut long grass, use a higher cutting height setting and walk slower; then cut the grass again at a normal setting. Mowing the grass when it is too long can plug the lawn mower and cause the engine to stall.

Note: The *SmartWheel* calculates the proper setting to ensure that you cut no more than a third of the grass blade.

1. Stop the engine and wait for all moving parts to stop.
2. Move the lawn mower into the grass; stop moving the lawn mower when the *SmartWheel* design on one of the rear wheels is upright (Fig. 14).
3. Use the *SmartWheel* design to compare the tips of the grass blades to the letters on the wheel. The letter on the *SmartWheel* that matches the tips of the grass blades is the proper cutting height.
4. Press down on the red button and hold the cutting height adjustment handle to move the cutting height up or down (Fig. 15).

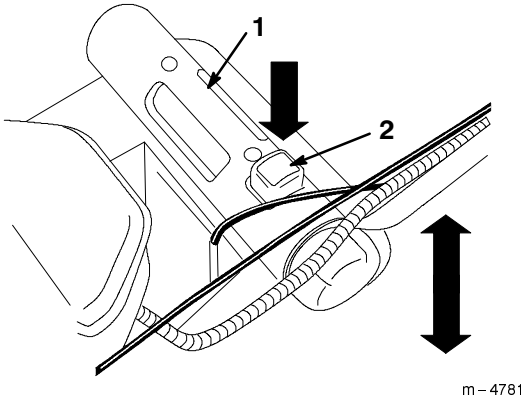

Figure 15

1. Cutting height adjustment handle
2. Red button

5. Move lift up or press down on the handle to the desired cutting height.

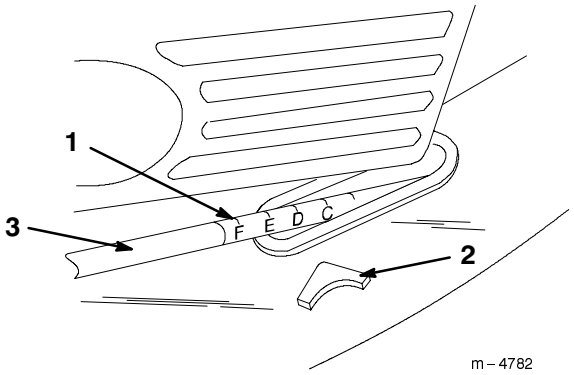

Figure 16

1. Cutting height setting
2. Pointer
3. Link rod

Using the Grass Bag

PROTOTYPE

Occasionally, you may want to use the grass bag for bagging lush grass or collecting leaves.

Installing the Grass Bag

1. Stop the engine and wait for all moving parts to stop.
2. Open the rear door (Fig. 1).
3. Hold the spring-loaded rear door up to prevent it from closing.

4. Remove the recycler plug.

5. Insert the grass bag frame hook into the deck slot and onto the grass bag frame saddles as shown in Figure 17.

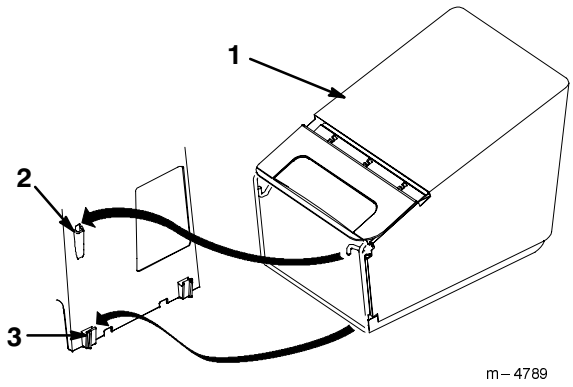

Figure 17

1. Grass bag
2. Deck slot
3. Grass bag frame saddle (2)

Note: Make sure the bottom of the grass bag frame rests on the grass bag frame saddles.

6. Release the rear door.

Mowing with the Grass Bag

DANGER

POTENTIAL HAZARD
- **A worn grass bag could allow small stones and other similar debris to be thrown in operator's or bystander's direction.**

WHAT CAN HAPPEN
- **Thrown objects can cause serious personal injury or death to the operator or bystanders.**

HOW TO AVOID THE HAZARD
- **Check the grass bag frequently. If it is damaged, install a new Toro replacement bag.**

Cut the grass until the bag is full.

IMPORTANT: Do not overfill the bag.

Removing the Grass Bag

1. Stop the engine and wait for all moving parts to stop.

DANGER

POTENTIAL HAZARD
- **Thrown objects may result if the rear door does not close completely.**

WHAT CAN HAPPEN
- **Thrown objects can cause serious personal injury or death.**

HOW TO AVOID THE HAZARD
- **If you cannot close the rear door because grass clippings clog the discharge area, stop the engine, wait for all moving parts to stop, and remove the grass clippings (with a stick, not your hand) until the door closes completely.**

2. Open the rear door (Fig. 1).

3. Hold the spring-loaded rear door up to prevent it from closing while you remove the grass bag.

4. Lift the grass bag frame from the grass bag frame saddles and out of the opening as shown in Figure 17.

Installing the Recycler Plug

1. Stop the engine and wait for all moving parts to stop.

2. Open the rear door (Fig. 1).

3. Hold the spring-loaded rear door up to prevent it from closing.

4. Insert the recycler plug into the opening as shown in Figure 18.

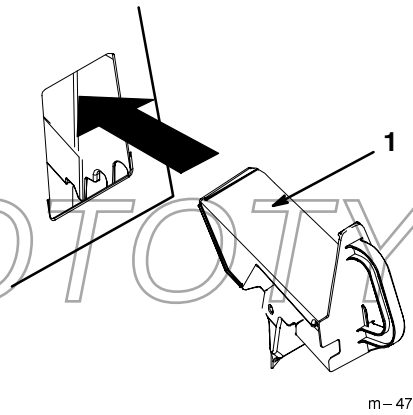

Figure 18

1. Recycler plug

5. Release the rear door.

PROTOTYPE

Rear Discharge

Occasionally, you may need to cut the lawn without the grass bag or the recycler plug when the grass is too long for bagging.

To use the rear discharge feature, remove the recycler plug or the grass bag (refer to *Removing the Grass Bag* on page 12), and close the rear door.

DANGER

POTENTIAL HAZARD
- **Thrown objects may result if the rear door does not close completely.**

WHAT CAN HAPPEN
- **Thrown objects can cause serious personal injury or death.**

HOW TO AVOID THE HAZARD
- **If you cannot close the rear door because grass clippings clog the discharge area, stop the engine, wait for all moving parts to stop, and remove the grass clippings (with a stick, not your hand) until the door closes completely.**

Operating Tips

General Tips

- Review the safety instructions and read this manual carefully before operating the lawn mower.
- Clear the area of sticks, stones, wire, branches, and other debris which could be picked up or hit by the blade and become thrown objects.
- Keep everyone, especially children and pets, away from the area of operation.
- Avoid striking trees, walls, curbs, or other solid objects. Never deliberately mow over any object.
- If the lawn mower strikes an object or starts to vibrate, immediately stop the engine, disconnect the wire from the spark plug, and examine the lawn mower for damage.
- Maintain a **sharp blade** throughout the cutting season. Periodically file down nicks on the blade.
- Replace the blade when necessary with an original Toro replacement blade.
- Only mow dry grass or leaves. Wet grass and leaves tend to clump on the yard and may cause the lawn mower to plug or the engine to stall.

WARNING

POTENTIAL HAZARD
- **Wet grass or leaves can cause you to slip and contact the blade.**

WHAT CAN HAPPEN
- **Blade contact can seriously injure you.**

HOW TO AVOID THE HAZARD
- **Mow only in dry conditions.**

- Clean clippings or leaves from the underside of the lawn mower deck after each mowing. See *Cleaning the Underside of the Lawn Mower Housing* on page 16.
- Keep the engine in good running condition.

WARNING

POTENTIAL HAZARD
- **Operating a lawn mower with its engine running at a speed greater than the factory setting can cause an unsafe operating condition.**

WHAT CAN HAPPEN
- **The lawn mower could throw a part of the blade or engine into the operator's or bystander's area and cause serious personal injury or death.**

HOW TO AVOID THE HAZARD
- **Do not change the engine speed setting.**
- **If you suspect the engine speed is faster than normal, contact your Authorized Service Dealer.**

- Clean the air filter frequently. Recycling stirs up more clippings and dust which clogs the air filter and reduces engine performance.
- To achieve the best recycling action, set the lawn mower cutting height so the lawn mower cuts no more than a third of the grass blade or a maximum of one-inch- (25 mm) long clippings. If you try to recycle more or if the grass is very lush, the recycling action will be poor. Under these conditions, use the rear discharge or grass bag. A few days later, install the recycling plug on your lawn mower to resume recycling.

Cutting Grass

- In the summer heat, cut the grass at the *D*, *E*, or *F* (52, 63, or 75 mm) cutting height settings. Only cut off about a third of the grass blade. Do not cut below the *D* (52 mm) setting unless the grass is sparse or it is late autumn when the grass growth begins to slow down.

PROTOTYPE

- When cutting grass over six inches (15 cm) tall, first mow using the rear discharge at the highest cutting height setting and walking slower; then mow again at a lower setting for best lawn appearance. If the grass is too long and leaves clumps on top of the lawn, the lawn mower may plug up and cause the engine to stall.
- Alternate the mowing direction. This helps disperse clippings over the lawn for even fertilization.

If the finished lawn appearance is unsatisfactory, try one or more of the following:

- Sharpen the blade.
- Walk at a slower pace while mowing.
- Raise the cutting height on your lawn mower.
- Cut the grass more frequently.
- Overlap cutting swaths instead of cutting a full swath with each pass.

Cutting Leaves

- After cutting the lawn, make sure that half of the lawn shows through the cut leaf cover. You may need to make one or more passes over the leaves.
- Slow down your mowing speed if the lawn mower does not cut the leaves finely enough.
- If you mow over oak leaves, you can add lime to the grass in the spring to reduce the acidity of the leaves.

Maintenance

Recommended Maintenance Schedule

Service Item	Service Operation	Each Use	5 Hours	25 Hours	50 Hours	100 Hours
Engine Oil	Check the engine oil before each use.	X				
	Drain and refill the engine crankcase with fresh oil after the first five hours of operation. Thereafter, change the oil every 50 operating hours or yearly.				X	
Housing	Clean built-up grass clippings and dirt.	X				
Fasteners	Check the blade and the engine mounting fasteners. Keep all fasteners tight to keep the lawn mower in safe working condition.		X			
Air Filter	Replace the paper air filter every 25 operating hours or yearly. Replace more frequently in dusty operating conditions.			X		
Blade	Sharpen or replace the blade; maintain it more frequently if the edge dulls quickly in rough or sandy operating conditions.				X	
Blade Brake	Check the stopping time every 50 operating hours or at the start of each mowing season. The blade must stop within three seconds of releasing the bail; if it does not, see your Authorized Service Dealer for repair.				X	
Self-propel Drive (Self-propelled model only)	Adjust the cable and grease the rear axle fittings.				X	
Fuel System	Check for leaks and/or a deteriorating fuel hose. Replace it if necessary.				X	

PROTOTYPE

Service Item	Service Operation	Each Use	5 Hours	25 Hours	50 Hours	100 Hours
Belt Cover	Remove and clean grass, clippings, and debris from under the cover.				X	
Spark Plug	Inspect and clean the spark plug. Replace it if necessary.					X
Cooling System	Clean debris from the engine air cooling fins and starter. Clean it more frequently in dirty operating conditions.					X
Fuel Tank	Empty the fuel tank before certain repairs as directed or before storage.					

CAUTION

POTENTIAL HAZARD
- **If you leave the wire on the spark plug, someone could start the engine.**

WHAT CAN HAPPEN
- **Someone accidentally starting the engine could seriously injure you or other bystanders.**

HOW TO AVOID THE HAZARD
- **Disconnect the wire from the spark plug before you do any maintenance. Set the wire aside so that it does not accidentally contact the spark plug.**

Checking the Engine Oil Level

Before you use the lawn mower, make sure that the oil level between the *Add* and the *Full* marks as shown on the dipstick (Fig. 7). If the oil level is below the *Add* mark, add oil. Refer to *Filling the Crankcase with Oil* on page 7.

Changing the Engine Oil

Change the oil after the first five operating hours and then after every 50 operating hours or every season. Run the engine just before changing the oil to warm the oil. Warm oil flows better and carries more contaminants.

Note: Change the oil after every 25 operating hours when operating under heavy load or in high temperatures.

Draining the Oil above the Lawn Mower Deck

1. Remove the grass bag.
2. Disconnect the wire from the spark plug (Fig. 8).
3. Drain the gasoline from the fuel tank; refer to steps 1 through 4 of *Emptying the Fuel Tank* on page 20.
4. Remove the dipstick from oil fill tube and place a drain pan next to the **left** side of the lawn mower.
5. Tip the lawn mower onto its **left** side, allowing the oil to drain into the drain pan (Fig. 19).

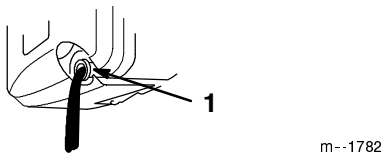

Figure 19

1. Oil fill tube

PROTOTYPE

6. Turn the lawn mower upright.
7. Fill the crankcase with fresh oil to the *Full* mark on the dipstick. Refer to *Filling the Crankcase with Oil* on page 7.
8. Install the dipstick.
9. Wipe up any spilled oil.
10. Connect the wire to the spark plug.
11. Recycle the used oil according to local codes.

Draining the Oil below the Lawn Mower Deck

Note: You need a 3/8-inch ratchet extension to perform this procedure.

WARNING

POTENTIAL HAZARD
- **The blade is sharp.**

WHAT CAN HAPPEN
- **Contact with a sharp blade can cause serious personal injury.**

HOW TO AVOID THE HAZARD
- **Wear gloves or wrap the sharp edges of the blade with a rag.**

1. Disconnect the wire from the spark plug (Fig. 8).
2. Drain the gasoline from the tank; refer to steps 1 through 4 of *Emptying the Fuel Tank* on page 20.
3. Tip the lawn mower onto its **left** side and secure it to prevent it from falling.
4. Place a drain pan under the lawn mower.
5. Remove the oil drain plug, return the lawn mower to its operating position, and allow the oil to drain into the drain pan (Fig 20).

Note: Avoid spilling the oil on the belt.

IMPORTANT: You may need to move the blade to get to the oil drain plug. Move the blade as little as possible to avoid future starting problems.

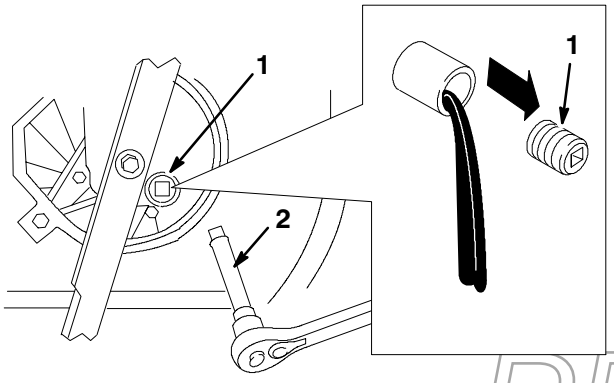

Figure 20

1. Oil drain plug
2. 3/8-inch Ratchet extension

6. Tip the lawn mower onto its left side and install the oil drain plug.
7. Move the oil drain pan from under the lawn mower and turn the lawn mower upright.
8. Fill the crankcase with fresh oil to the *Full* mark on the dipstick. Refer to *Filling the Crankcase with Oil* on page 7.
9. Install the dipstick.
10. Wipe up any spilled oil.
11. Connect the wire onto the spark plug.
12. Recycle the used oil according to local codes.

Cleaning the Underside of the Lawn Mower Housing

Keep the underside of the lawn mower housing clean. Be especially careful to keep the kickers free of debris (Fig. 21).

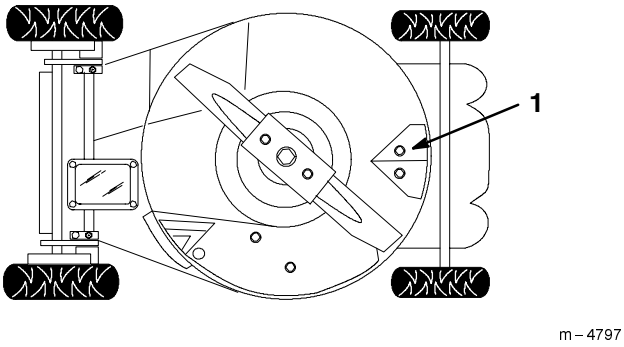

Figure 21

1. Kicker plate

Washing Method

1. Move the mower onto a flat surface near a garden hose.
2. Attach a quick disconnect coupling (sold separately) to the end of the garden hose.
3. Lift the rear door and attach the coupling to the lawn mower washout fitting on the recycling plug (Fig. 22).

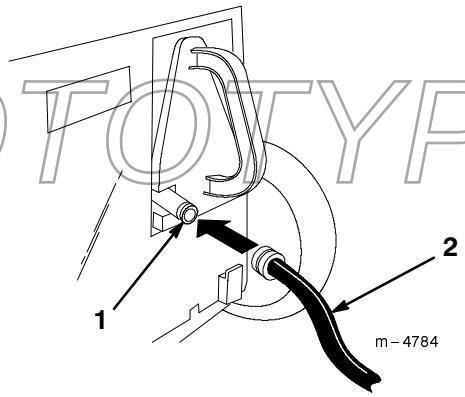

Figure 22

1. Washout fitting
2. Hose

4. Turn the water on high.

PROTOTYPE

5. Start the engine.
6. Let the lawn mower run for two minutes.
7. Stop the engine and wait for all moving parts to stop.
8. Turn the water off.
9. Remove the coupling from the washout fitting.
10. Start the lawn mower and let it run for one minute to dry out the lawn mower and its components.

If the underside of the lawn mower deck has excessive grass buildup, repeat steps 2 through 9 above and do the following:

1. Let the lawn mower soak for 30 minutes.
2. Turn the water on high again.
3. Run the lawn mower for another two minutes.
4. Stop the engine and wait for all moving parts to stop.

⚠ WARNING

POTENTIAL HAZARD
- **A broken or missing washout fitting could expose you and others to thrown objects or blade contact.**

WHAT CAN HAPPEN
- **Contact with thrown debris or blade contact will cause injury or death.**

HOW TO AVOID THE HAZARD
- **Replace a broken or missing washout fitting immediately before using the lawn mower again.**
- **Plug any hole(s) in the lawn mower with bolts and locknuts.**
- **Never put your hands or feet under the lawn mower or through openings in the lawn mower.**

Scraping Method

If washing does not remove all the debris from under the deck, tip the lawn mower and scrape it clean.

1. Disconnect the wire from the spark plug (Fig. 8).
2. Drain the gasoline from the fuel tank. Refer to steps 3 and 4 of *Emptying the Fuel Tank* on page 20.
3. Remove the grass bag.
4. Tip the lawn mower onto its **left** side (Fig. 21).
5. Remove the dirt and grass clippings with a hardwood or plastic scraper. Avoid burrs and sharp edges.

IMPORTANT: Move the blade as little as possible to avoid future starting problems.

6. Turn the lawn mower upright.
7. Fill the fuel tank.
8. Connect the wire to the spark plug.

Servicing the Air Filter

Replace the air filter every season or every 25 operating hours; replace it more frequently under dusty operating conditions.

IMPORTANT: Do not operate the engine without the air filter element; extreme engine damage will occur.

1. Stop the engine and wait for all moving parts to stop.
2. Disconnect the wire from the spark plug (Fig. 8).
3. Loosen the screw that secures the air cleaner cover (Fig. 23).
4. Tilt the cover down and clean it thoroughly (Fig. 23).

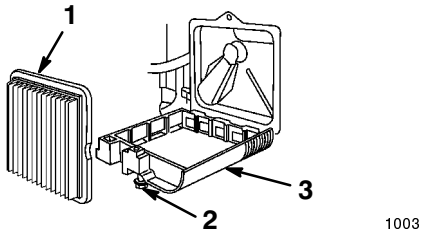

Figure 23

1. Air filter
2. Screw
3. Cover

5. Remove the paper air filter and discard it (Fig. 23).

IMPORTANT: Do not try to clean the paper air filter.

6. Insert a new paper air filter (Fig. 23).
7. Install the air filter cover and secure it with the screw.

PROTOTYPE

Maintaining the Blade

A straight, sharp blade provides maximum cutting performance. Regularly inspect and sharpen the blade.

⚠ WARNING ⚠

POTENTIAL HAZARD
- **The blade is sharp.**

WHAT CAN HAPPEN
- **Contact with a sharp blade can cause serious personal injury.**

HOW TO AVOID THE HAZARD
- **Wear gloves or wrap the sharp edges of the blade with a rag.**

1. Disconnect the wire from the spark plug (Fig. 8).

2. Tip the lawn mower onto its **left** side (Fig. 24).

IMPORTANT: Move the blade as little as possible to avoid future starting problems.

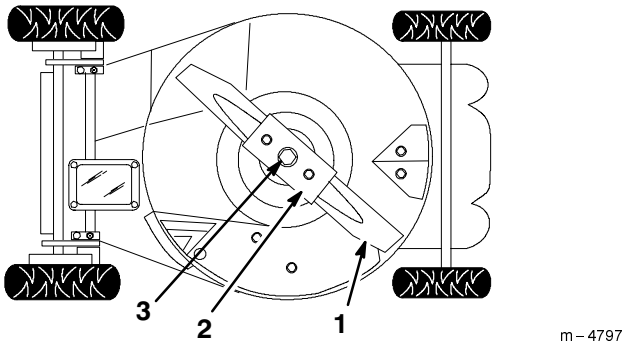

Figure 24

1. Blade
2. Blade stiffener
3. Blade bolt and lock washer

Inspecting the Blade

Carefully examine the blade for sharpness and wear, especially where the flat and the curved parts meet (Fig. 25A). Because sand and abrasive material can wear away the metal that connects the flat and curved parts of the blade, check the blade before using the lawn mower. If you notice a slot or wear (Figs. 25B and 25C), replace the blade; refer to *Removing the Blade* on page 18.

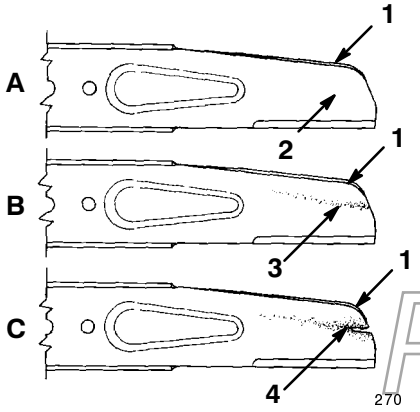

Figure 25

1. Sail
2. Flat part of blade
3. Wear
4. Slot formed

Note: For the best performance, install a Toro new blade before the cutting season begins. During the year, file down any small nicks to maintain the cutting edge.

DANGER

POTENTIAL HAZARD
- **A worn or damaged blade can break and a piece of the blade could be thrown into the operator's or bystander's area.**

WHAT CAN HAPPEN
- **A thrown piece of the blade could cause serious personal injury or death to the operator or bystanders.**

HOW TO AVOID THE HAZARD
- **Inspect the blade periodically for wear or damage.**
- **Replace a worn or damaged blade.**

Removing the Blade

WARNING

POTENTIAL HAZARD
- **Operating the lawn mower without the blade stiffener in place can cause the blade to flex, bend, or break.**

WHAT CAN HAPPEN
- **A broken blade could cause serious injury or death to the operator or bystanders.**

HOW TO AVOID THE HAZARD
- **Do not operate the lawn mower without the blade stiffener.**

1. Grasp the end of the blade using a rag or a thickly padded glove.

2. Remove the blade bolt, the lock washer, the blade, and the blade stiffener (Fig. 24).

Note: Turn the blade bolt counterclockwise to loosen it.

PROTOTYPE

Sharpening the Blade

Use a file to sharpen the top side of the blade and maintain the original cutting angle (Fig. 26).



Figure 26

1. Sharpen at this angle only

Note: The blade will remain balanced if you remove the same amount of material from both cutting edges.

Balancing the Blade

1. Check the balance of the blade by placing the center hole of the blade over a nail or a screwdriver shank clamped horizontally in a vise (Fig. 27).

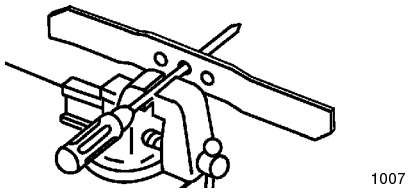

Figure 27

Note: You can also check the balance by using a commercially manufactured blade balancer.

2. If either end of the blade rotates downward, file that end (not the cutting edge or the end near the cutting edge). The blade is properly balanced when neither end drops.

Installing the Blade

1. Install a sharp, balanced Toro blade, the blade stiffener, the lock washer, and the blade bolt.

Note: The sail part of the blade must point upward (toward the top of the lawn mower housing).

2. Torque the blade bolt to 45 to 60 ft-lb (33 to 44 N·m).

3. Connect the wire to the spark plug.

Lubricating the Self-propel Drive

Self-propelled Model only

After every 25 operating hours or at the end of the season, lubricate the rear wheels.

1. Wipe the grease fittings with a clean rag (Fig. 28).

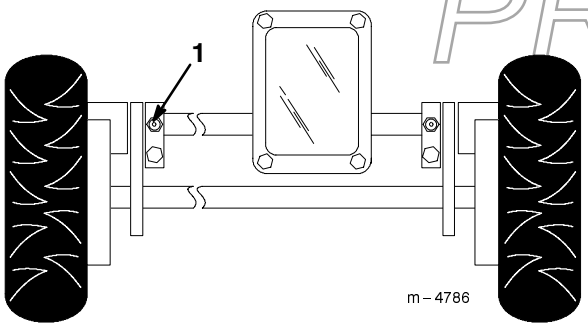

Figure 28

1. Grease fitting (2)

2. Install a grease gun onto each fitting and gently apply two or three pumps of *#2 multi-purpose lithium base grease*.

IMPORTANT: Applying grease using excess pressure may damage the seals.

Adjusting the Self-propel Drive Cable

Self-propelled Model only

If the top speed begins to slow on the lawn mower, adjust the self-propelled drive cable.

1. Stop the engine and wait for all moving parts to stop.

2. Remove the belt cover.

3. Loosen the cable support nut (Fig. 29).

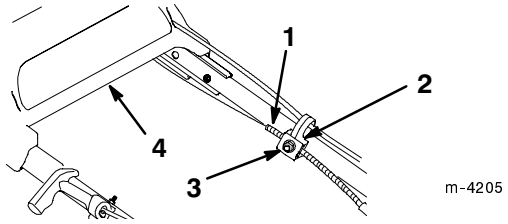

Figure 29

1. Cable jacket
2. Cable support
3. Nut
4. Upper handle

4. Push the belt guide tab down until it contacts the lawn mower, then hold it in place (Fig. 30).

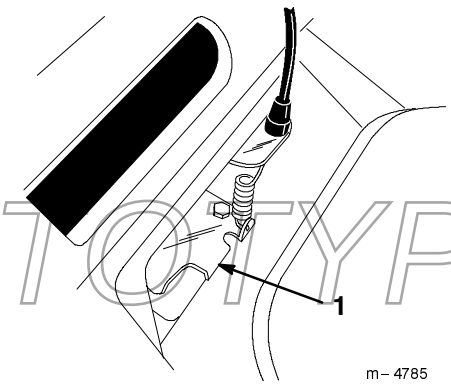

Figure 30

1. Belt guide tab

5. With the upper handle pulled and held back as far as possible and while holding the belt guide tab down, pull the cable jacket down (toward the lawn mower) to remove all the slack in the cable (Fig. 29).

6. Tighten the nut on the cable support (Fig. 29).

PROTOTYPE

7. Release the drive bracket.
8. Install the belt cover.

Cleaning under the Belt Cover

Keep the area under the belt cover free of debris.

1. Stop the engine and wait for all moving parts to stop.
2. Lift off the cover and brush out all the debris from the belt area.
3. Install the belt cover.

Servicing the Spark Plug

Check the spark plug after every 25 operating hours. Use a *Champion RJ19LM* spark plug or equivalent.

1. Stop the engine and wait for all moving parts to stop.
2. Disconnect the wire from the spark plug (Fig. 8).
3. Clean around the spark plug.
4. Remove the spark plug from the cylinder head.

IMPORTANT: Replace a cracked, fouled, or dirty spark plug. Do not clean the electrodes because grit entering the cylinder can cause engine damage.

5. Set the gap on the new plug to 0.030 inch (0.76 mm) (Fig. 31).

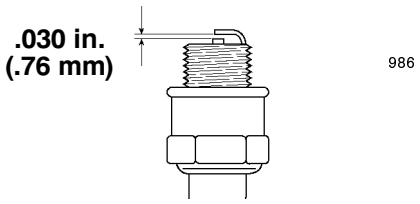

Figure 31

1. 0.030 in. (.76 mm)

6. Install the spark plug and the gasket seal.
7. Torque the spark plug to 15 ft-lb (20 N·m).
8. Connect the wire to the spark plug.

Cleaning the Cooling System

After every 100 operating hours or every season, clean the dirt and the chaff from the cylinder, the cylinder head fins, and around the carburetor and the linkage. Remove debris from the air intake slots on the recoil housing. This will ensure proper cooling and the best engine performance.

Cleaning the Recycler Plug and the Discharge Tunnel

To ensure the best performance, clean the discharge tunnel and the recycler plug after each use. When the grass is thick and lush, clippings may collect on and around the recycler plug, making it difficult to remove it.

Emptying the Fuel Tank

1. Stop the engine and wait for it to cool down.
2. Disconnect the wire from the spark plug (Fig. 8).
3. Remove the cap from the fuel tank (Fig. 7).
4. Use a hand pump to syphon the fuel into a clean approved gasoline container.
5. Connect the wire to the spark plug.
6. Run the engine until it stops.
7. Start the engine again to make sure that all the gasoline is out of the carburetor.

PROTOTYPE

Troubleshooting

Toro designed and built your lawn mower for trouble-free operation. Check the following components and items carefully. If a problem continues, see your Authorized Service Dealer.

PROBLEM	CORRECTIVE ACTION
Engine will not start	1. Fill the fuel tank with fresh gasoline. 2. Press the primer three times. 3. Connect the spark plug wire. 4. Clean the spark plug, check the spark plug gap, and replace the spark plug if it is damaged.

PROBLEM	CORRECTIVE ACTION
Engine starts hard or loses power	1. Drain and fill the fuel tank with fresh gasoline. 2. Check the gasoline cap for ventilation; if the cap does not vent air, replace it. 3. Clean the air filter. 4. Clean the lawn mower discharge chute. 5. Clean the underside of the lawn mower deck. 6. Clean the spark plug, check the spark plug gap, and replace the spark plug if it is damaged. 7. Check the engine oil.
Engine runs rough	1. Connect the spark plug wire. 2. Clean the spark plug, check the spark plug gap, and replace the spark plug if it is damaged. 3. Clean the air filter.
Lawn mower or engine vibrates excessively	1. Balance the blade. 2. Tighten the blade mounting nut. 3. Clean the lawn mower discharge chute. 4. Clean the underside of the lawn mower deck. 5. Tighten the engine mounting bolts.
Uneven cutting pattern	1. Sharpen and balance the blade. 2. Change the mowing pattern. 3. Clean the underside of the lawn mower deck.
Discharge chute plugs	1. Raise the cutting height. 2. Allow the grass to dry before mowing. 3. Clean the underside of lawn mower deck.
Lawn mower will not self-propel	1. Adjust the self-propel drive cable. 2. Clean the debris under the belt cover.

Storage

PROTOTYPE

To prepare the lawn mower for off-season storage, perform the recommended maintenance procedures. Refer to *Maintenance* on page 14.

Store the lawn mower in a cool, clean, dry place. Cover the lawn mower to keep it clean and protected.

Preparing the Fuel System

WARNING

POTENTIAL HAZARD
- **Gasoline can vaporize if stored over long periods of time.**

WHAT CAN HAPPEN
- **Vaporized fuel can explode if it comes into contact with open flame.**

HOW TO AVOID THE HAZARD
- **Do not store gasoline (fuel) over long periods of time.**
- **Do not store lawn mower with fuel in the tank in an enclosure with an open flame. (Example: a furnace or water heater pilot light.)**
- **Allow the engine to cool before storing in any enclosure.**

Empty the fuel tank when mowing the last time before storing the lawn mower.

1. Run the lawn mower until the engine stops from running out of fuel.
2. Prime the engine and start it again.
3. Allow the engine to run until it stops. When you can no longer start the engine, it is sufficiently dry.

Preparing the Engine

1. While the engine is still warm, drain the oil from the crankcase. Refer to *Changing the Engine Oil* on page 15.
2. Remove the spark plug (Fig. 8).
3. Using an oil can, add about one tablespoon of oil to the crankcase through the spark plug hole.
4. Slowly rotate the engine several times, using the starter rope, to distribute the oil.
5. Install the spark plug but **do not** connect the spark plug wire.

General Information

1. Clean under the lawn mower housing. Refer to *Cleaning the Underside of the Lawn Mower Housing* on page 16.
2. Clean any dirt and chaff from the cylinder, cylinder head fins, and blower housing.
3. Remove grass clippings, dirt, and grime from the external parts of the engine, the shrouding, and the top of the lawn mower housing.
4. Check the condition of the blade. Refer to *Maintaining the Blade* on page 17.
5. Tighten all nuts, bolts, and screws.
6. Lubricate the wheels. Refer to *Lubricating the Self-propel Drive* on page 19.
7. Touch up all rusted or chipped paint surfaces with paint available from an Authorized Service Dealer.

Folding the Handle

WARNING

POTENTIAL HAZARD
- **Folding or unfolding the handle improperly can pinch, stretch, or damage one or more of the cables.**

WHAT CAN HAPPEN
- **Any pinched, stretched, or damaged cable may cause an operational failure that results in an unsafe operating condition.**

HOW TO AVOID THE HAZARD
- **Do not pinch, stretch, or damage the cables.**
- **Handle the cables with care when folding or unfolding the handle.**
- **Do not use the lawn mower if one or more of the cables are pinched, stretched, or damaged. Contact your Authorized Service Dealer.**

1. Loosen the handle height adjustment knobs that secure the handle to the lawn mower.
2. Loosen the knobs that secure the upper handle section to the lower handle section.
3. Carefully swing the lower handle section forward until it rests on the engine (Fig. 32).

PROTOTYPE

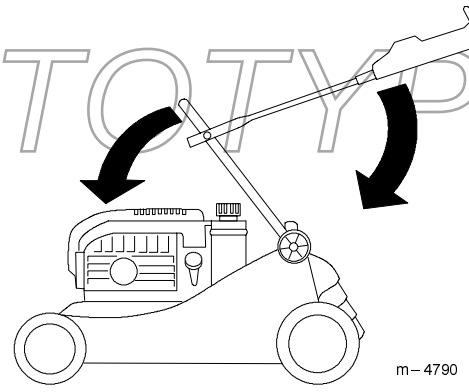

Figure 32

4. Carefully swing the upper handle section rearward until it rests flat (Fig. 32).

Removing from Storage

WARNING

POTENTIAL HAZARD
- **Folding or unfolding the handle improperly can pinch, stretch, or damage one or more of the cables.**

WHAT CAN HAPPEN
- **Any pinched, stretched, or damaged cable may cause an operational failure that results in an unsafe operating condition.**

HOW TO AVOID THE HAZARD
- **Do not pinch, stretch, or damage the cables.**
- **Handle the cables with care when folding or unfolding the handle.**
- **Do not use the lawn mower if one or more of the cables are pinched, stretched, or damaged. Contact your Authorized Service Dealer.**

1. Carefully unfold the upper handle until it nests with the lower handle, then tighten the knobs.
2. Check and tighten all fasteners.
3. Remove the spark plug (Fig. 8) and spin the engine rapidly using the starter to remove the excess oil from the cylinder.
4. Clean the spark plug or replace it if it is cracked, broken, or if the electrodes are worn.
5. Install the spark plug and torque it to 15 ft-lb (20 N·m).
6. Perform the recommended maintenance procedures; refer to *Maintenance* on page 14.
7. Fill the fuel tank (Fig. 7) with fresh gasoline.
8. Check the engine oil level. Refer to *Checking the Engine Oil Level* on page 15.
9. Connect the wire to the spark plug.

PROTOTYPE

TORO.

Gas, Cordless, Electric, and 21" Commercial Duty Walk Mowers

The Toro Total Coverage Guarantee

A Full Warranty
(Limited Warranty for Commercial Use)

Conditions and Products Covered

The Toro Company and its affiliate, Toro Warranty Company, pursuant to an agreement between them, jointly promise to repair any Toro Product used for normal residential purposes* if defective in materials or workmanship or if it stops functioning due to the failure of a component. The following time periods apply from the date of purchase:

Products	Warranty Period
• Super Recycler® Walk Mowers	5 year full warranty
• VacuPower® Walk Mowers	5 year full warranty
• All Others	2 year full warranty

This warranty includes the cost of parts and labor, but you must pay transportation costs.

This warranty applies to all gas, cordless, and electric consumer walk power mowers.

* Normal residential purposes means use of the product on the same lot as your home. Use at more than one location is considered commercial use, and the commercial use warranty would apply.

Limited Warranty for Commercial Use

Toro Walk Power Mowers used for commercial, institutional, or rental use are warranted against defects in materials or workmanship. Components failing due to normal wear are not covered by this warranty. The following time periods apply from the date of purchase:

Products	Warranty Period	
	Engine	Entire Unit
• 21" Commercial Duty Walk Mowers	2 year limited	1 year limited
• All Others	45 day limited	45 day limited

Instructions for Obtaining Warranty Service

Should you feel your Toro Product contains a defect in materials or workmanship, contact the dealer who sold you the product or any Authorized Service Dealer or Master Service Dealer. The Yellow Pages of your telephone directory is a good reference source. The dealer will either arrange service at his/her dealership or recommend another Authorized Service Dealer who may be more convenient. You may need proof of purchase (copy of registration card, sales receipt, etc.) for warranty validation.

If for any reason you are dissatisfied with the Service Dealer's analysis of the defect in materials or workmanship or if you need a referral to a Toro Service Dealer, please feel free to contact us at:

Customer Service Department
Toro Warranty Company
8111 Lyndale Avenue South
Bloomington, MN 55420-1196
612-888-8801
800-348-2424

Owner Responsibilities

You must maintain your Toro Product by following the maintenance procedures described in the operator's manual. Such routine maintenance, whether performed by a dealer or by you, is at your expense.

Items and Conditions Not Covered

There is no other express warranty except for special emission system coverage on some products and the Toro Starting Guarantee on GTS Engine. This express warranty does not cover:

- Cost of regular maintenance service or parts, such as filters, fuel, lubricants, oil changes, spark plugs, blade sharpening, worn blade, cable/linkage adjustments, or brake and clutch adjustments.
- Any product or part which has been altered or misused or required replacement or repair due to accidents or lack of proper maintenance.
- Repairs necessary due to improper fuel, contaminants in the fuel system, or failure to properly prepare the fuel system prior to any period of non-use over three months.
- Repairs necessary due to improper battery care, electrical supply irregularities, or failure to properly prepare the mower prior to any period of non-use.
- Pickup and delivery charges.

All repairs covered by this warranty must be performed by an Authorized Toro Service Dealer using Toro approved replacement parts.

General Conditions

Repair by an Authorized Toro Service Dealer is your sole remedy under this warranty.

Neither The Toro Company nor Toro Warranty Company is liable for indirect, incidental or consequential damages in connection with the use of the Toro Products covered by this warranty, including any cost or expense of providing substitute equipment or service during reasonable periods of malfunction or non-use pending completion of repairs under this warranty. Some states do not allow exclusions of incidental or consequential damages, or limitations on how long an implied warranty lasts, so the above exclusions and limitations may not apply to you.

This warranty gives you specific legal rights, and you may also have other rights which vary from state to state.

PROTOTYPE

Countries Other than the United States or Canada

Customers who have purchased Toro products exported from the United States or Canada should contact their Toro Distributor (Dealer) to obtain guarantee policies for your country, province, or state. If for any reason you are dissatisfied with your Distributor's service or have difficulty obtaining guarantee information, contact the Toro importer. If all other remedies fail, you may contact us at Toro Warranty Company.

Rev. 11/08/1999