Form No. 3431-258 Rev A

TORO®

Count on it.

Parts Catalog

# Powervac Gas-Powered Blower

**Model No. 51988—Serial No. 318000001 and Up**

Register at www.Toro.com.
Original Instructions (EN)

*3431-258* A

# Ordering Replacement Parts

To order replacement parts, please supply the part number, the quantity, and the description of each part desired.

**Understanding Reference Numbers**

Each identified part in an illustration has a reference number. The reference number for a part also appears in the parts list, along with other information about the part.

This catalog uses two special reference number formats, one to indicate parts in a service assembly and another to indicate the quantity of a given part in an illustration.

**Service Assembly Reference Numbers**

Parts in service assemblies have reference numbers in the form a:b. The a represents the reference number of the entire service assembly and the b represents a sequential number unique to each part within the service assembly.

For example, a wheel assembly might be identified by reference number 6, the tire by 6:1, the valve by 6:2, and the wheel by 6:3. When you order the assembly identified by reference number 6, you receive all parts identified by reference numbers 6:1,6:2, and 6:3. However, you may also order any part individually. Reference numbers of this type appear in illustration and in parts lists.

**Reference Numbers Indicating Quantity**

In an illustration, if a reference number indicates more than one part, the reference number has the form nX y. The n represents the quantity of the part, the X is the multiplication symbol, and the y represents the reference number.

For example, in an illustration, the reference number 2X 37 means that two of the parts identified by reference number 37 are indicated.

# Contents

Main Blower Assembly . . . . . 4
Engine and Housing Assembly . . . . . 6
Engine Component Assembly . . . . . 8
Attachments and Accessories . . . . . 10

© 2019—The Toro® Company
8111 Lyndale Avenue South
Bloomington, MN 55420



Contact us at www.Toro.com.
Printed in the USA.
All Rights Reserved

# Main Blower Assembly

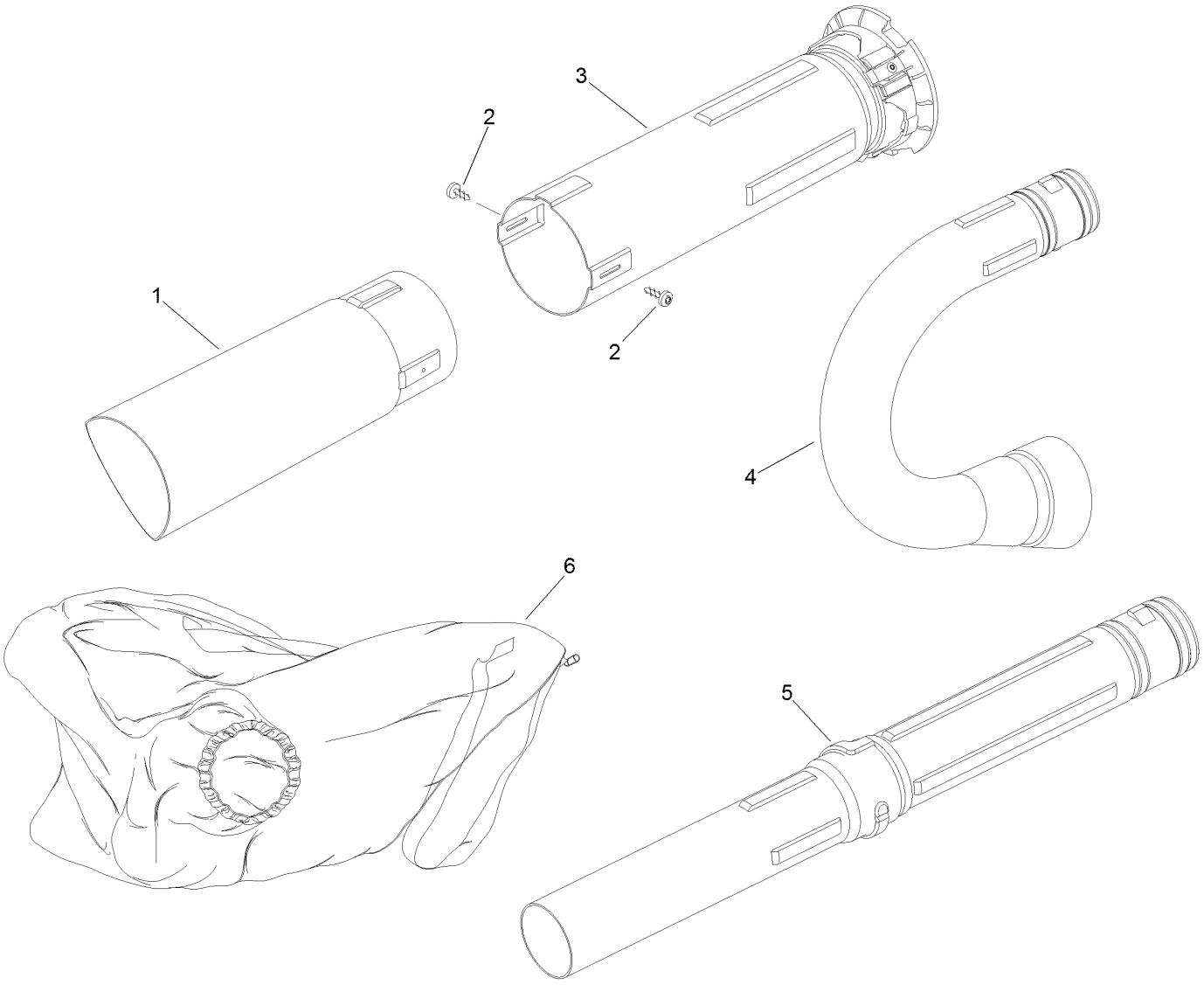

# Main Blower Assembly (continued)

| Ref. | Part Number | Qty. | Description |
|---|---|---|---|
| 1 | 580955001 | 1 | Tube-Vacuum, Lower |
| 2 | 660621001 | 2 | Screw-Tube, Vacuum |
| 3 | 311954001 | 1 | Tube-Vacuum, Upper |
| 4 | 580956001 | 1 | Tube-Adaptor, Vacuum Bag |
| 5 | 360015001 | 1 | Blower Tube ASM |
| 6 | 970694003 | 1 | Bag-Vacuum |

# Engine and Housing Assembly

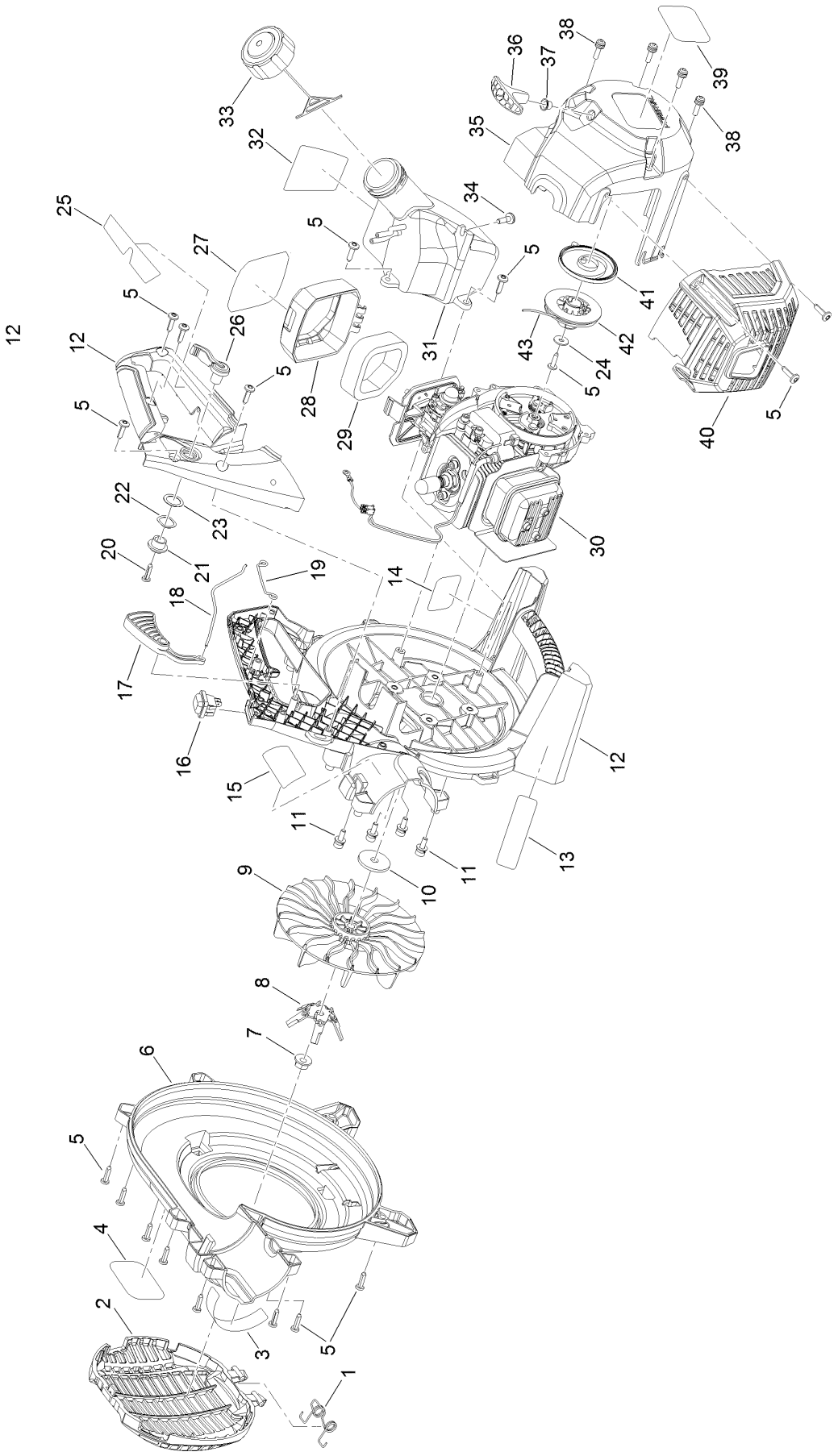

# Engine and Housing Assembly (continued)

| Ref. | Part Number | Qty. | Description |
|---|---|---|---|
| 1 | 694143002 | 1 | Hinge-Spring, Vacuum Door |
| 2 | 527987001 | 1 | Door-Vacuum |
| 3 | 941727006 | 1 | Decal-Warning Icon |
| 4 | 940907028 | 1 | Decal-Logo, Right |
| 5 | 660629005 | 17 | Screw |
| 6 | 203383001 | 1 | Outer Volute ASM |
| 7 | 678018001 | 1 | Nut-Lock, Flange |
| 8 | 678114004 | 1 | Blade-Mulching |
| 9 | 527982001 | 1 | Fan-Blower |
| 10 | 638125008 | 1 | Washer |
| 11 | 660351001 | 4 | Screw-PH |
| 12 | 203657001 | 1 | Engine Shroud ASM |
| 13 | 940654088 | 1 | Label-Combustion |
| 14 | 940907027 | 1 | Decal-Rear Logo |
| 15 | 941727009 | 1 | Decal-Tube Removal |
| 16 | 760961005 | 1 | Switch-On/Off |
| 17 | 527926001 | 1 | Lever-Throttle |
| 18 | 308209004 | 1 | Throttle Cable ASM |
| 19 | 290469001 | 1 | Wire-Ground |
| 20 | 660629002 | 1 | Screw |
| 21 | 527986001 | 1 | Trigger-Activator, Throttle |
| 22 | 632423001 | 1 | Washer-Wave |
| 23 | 631049004 | 1 | Washer |
| 24 | 678587001 | 1 | Washer |
| 25 | 941727005 | 1 | Decal-Warning Strip Icon |
| 26 | 527985001 | 1 | Lever-Control, Cruise |
| 27 | 940908003 | 1 | Decal-Starting Instructions |
| 28 | 203385001 | 1 | Air Box Cover ASM |
| 29 | 560873001 | 1 | Element-Filter, Air |
| 30 | | 1 | Power Head ASM Not Serviced Separately, For Replacement Parts See Engine Component Assembly ● |
| 31 | 203381001 | 1 | Fuel Tank ASM |
| 32 | 940991054 | 1 | Decal-E85 |
| 33 | 310816015 | 1 | Cap-Fuel |
| 34 | 662274001 | 1 | Screw |
| 35 | 310000001 | 1 | Starter Housing ASM |
| 36 | 525485008 | 1 | Grip-Starter |
| 37 | 638088002 | 1 | Eyelet |
| 38 | 660344001 | 4 | Screw-PH |
| 39 | 940907029 | 1 | Decal-Logo Left |
| 40 | 527925001 | 1 | Cover-Muffler |
| 41 | 638033001 | 1 | Spring Housing ASM |
| 42 | 527983001 | 1 | Pulley-Starter |
| 43 | 900849012 | 1 | Rope-Starter |

● Not serviced separately

# Engine Component Assembly

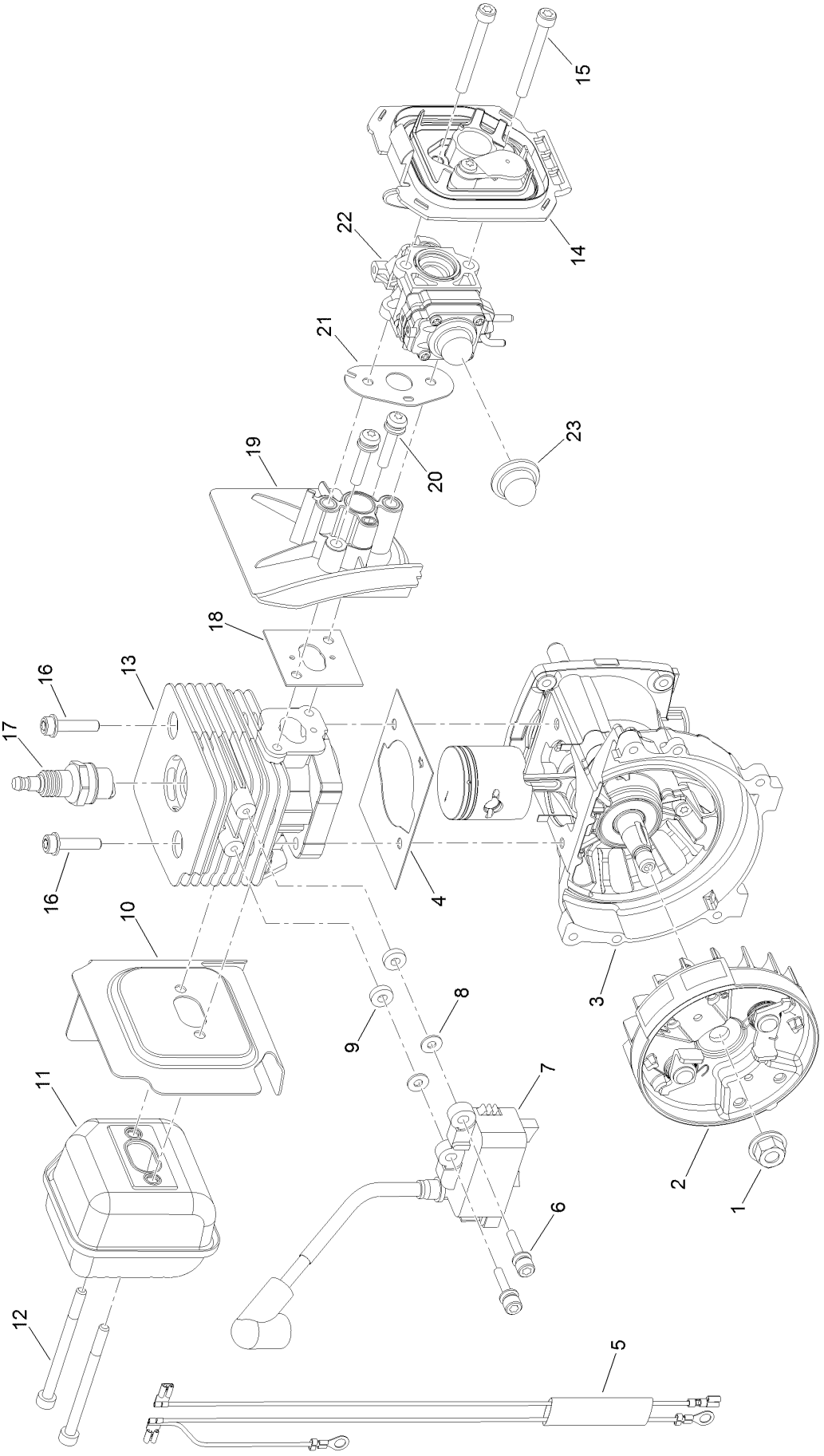

# Engine Component Assembly (continued)

| Ref. | Part Number | Qty. | Description |
|---|---|---|---|
| 1 | 690689001 | 1 | Nut-Rotor |
| 2 | 307201002 | 1 | Flywheel ASM |
| 3 | 307366001 | 1 | Crankcase/Piston ASM |
| 4 | 900709007 | 1 | Gasket |
| 5 | 291388002 | 1 | Harness-Wire |
| 6 | 660968004 | 2 | Screw And Washer |
| 7 | 290178029 | 1 | Module-Ignition |
| 8 | 690969001 | 2 | Washer |
| 9 | 590462001 | 2 | Spacer |
| 10 | 639243002 | 1 | Gasket-Muffler |
| 11 | 300748042 | 1 | Muffler ASM |
| 12 | 662169001 | 2 | Screw |
| 13 | 642368002 | 1 | Cylinder |
| 14 | 310997003 | 1 | Air Box Cover ASM |
| 15 | 660347003 | 2 | Screw |
| 16 | 660342001 | 2 | Screw-Socket Head |
| 17 | 870174001 | 1 | Sparkplug |
| 18 | 562927008 | 1 | Gasket-Cylinder |
| 19 | 528049001 | 1 | Plate-Heat Sink |
| 20 | T662210002 | 2 | Screw |
| 21 | 900711015 | 1 | Gasket-Carburetor |
| 22 | 308480002 | 1 | Carburetor ASM |
| 23 | 561635002 | 1 | Purge Bulb |

# Attachments and Accessories

## For 51988 Powervac Gas-Powered Blower

| Product Name | Model/Part |
| --- | --- |
| High Altitude Kit | 120900226 |

## Notes:




**Count on it.**