1967

TORO®

OWNER'S OPERATING AND PARTS MANUAL



5 HP LAWN TRACTOR

MODEL NOS. 57100 (MANUAL START) AND 57200 (ELECTRIC START)

(INCLUDES SERIAL NOS. 700001 AND UP)

PRICE 25¢

FOREWORD

The riding rotary lawn mower is a precision machine which will require a minimum of care. Keep it clean and well lubricated. Keep the blade sharp and balanced. Use it within its capabilities. If kept in good repair and adjustment, it is capable of providing years of dependable service.

DEALER RESPONSIBILITY

Before the mower is delivered to the customer, the dealer should prepare it for operation and should be sure that the owner understands the instructions for operating and caring for his tractor.

PREPARING FOR OPERATION

1. To install the handle bar put the single end thru the oblong hole in the top of the hood and over the post at the front of the chassis. Lift the grille for access to the post. Bolt in place with the two bolts and two nuts loosely assembled in the handle bar.

2. Check the chassis to be sure that it has been lubricated.

3. Check the level of the lubricant in the transmission assembly by removing the transmission inspection plug. Lubricant should be level with bottom of inspection plug hole, when tractor is on level ground or floor.

4. Fill the crankcase with oil according to the engine manufacturer's instructions.

> **CAUTION**
>
> Do not over-fill the transmission or the crankcase. To do so will cause overheating and blown oil seals.

5. Fill the gasoline tank with any regular gasoline. Do not mix oil with the gasoline.

6. Squirt a drop or two of oil on the top of the ball in the shift lever housing.

BREAKING IN

To break in the engine and transmission, set the rear of the tractor on a block to raise the rear wheels a little above the floor, and operate the engine until it has used up one-half tank or more of gasoline. Shift the transmission into the various speeds during the break-in run, to assure breaking it in properly.

Copyright 1966 by
Toro Manufacturing Corporation
Minneapolis, Minnesota 55420
U.S.A.

TORO

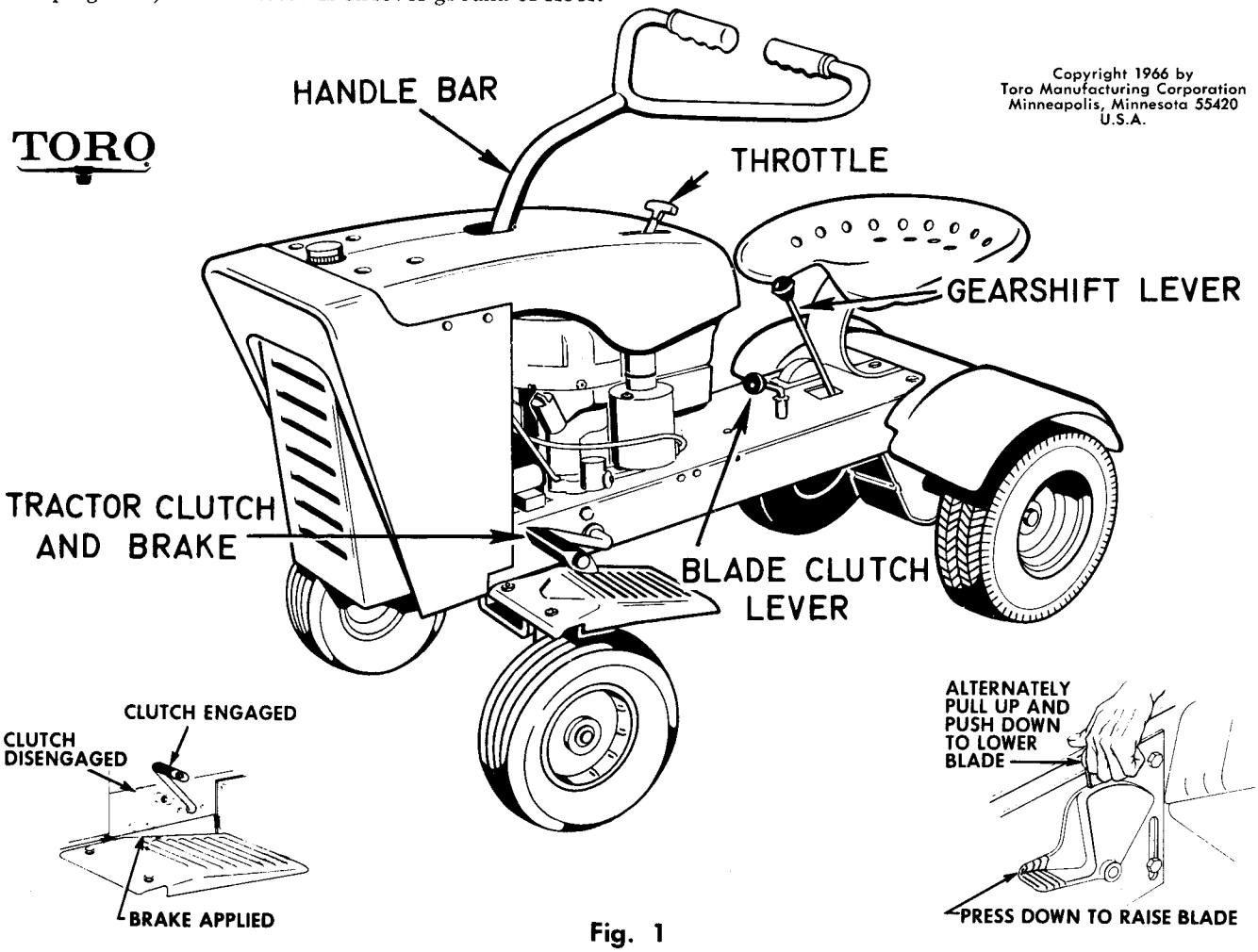

Fig. 1

THINK OF SAFETY BEFORE YOU MOW

1. Never allow children or young teen-agers to operate the tractor. Keep children and pets away from the area of the mower at all times while it is working.

2. Always keep hands and feet out from under the mower deck while the engine is running, and until you are SURE that the blade has stopped turning after the engine is shut off or the blade clutch disengaged. It will coast for several seconds.

3. Before you start mowing, walk over the area you're going to cut and pick up all debris which could be picked up and thrown by the blade. Sticks, stones and pieces of metal are a hazard to the mower, and when chopped to bits by the heavy blade, can be dangerous to pets and people.

4. Know how to stop the mower and the engine instantly.

5. When moving the tractor along paths and walks, and at all times when not actually cutting grass, keep the blade clutch disengaged.

6. Don't attempt any service operations while the engine is running. Disconnect the spark plug wire to prevent accidental starting.

7. When mowing high grass, start with the blade at its highest position. This lessens the danger of striking hidden objects. Then take a second cut after first checking to be sure there are no obstructions.

8. Fill the gasoline tank outdoors. Avoid spilling gasoline. Don't smoke while filling the tank.

9. Stop the engine and disengage the blade clutch whenever you leave the tractor.

GET ACQUAINTED WITH YOUR TRACTOR

Become familiar with your tractor before you put it to work. Read these instructions and the engine manufacturer's booklet. Be sure you know what the controls are for, and how they operate. Operate it for a while on a driveway or sidewalk to get the feel of the controls. These simple controls make your tractor handy to operate.

LEARN WHAT THE CONTROLS ARE FOR

1. The engine control lever has a choke position, used to start a cold engine, a run position used to control the engine speed or for starting a warm engine and a stop position, which stops the engine.
(Before starting engine, firmly depress clutch and set the parking brake.)
2. Pull the starter handle swiftly to start. Do not let go as the rope rewinds to prevent backlash.
3. Turn the blade clutch lever to engage and disengage the blade drive. The blade should be disengaged when the engine is stopped.
4. Depress the clutch pedal for declutching and shifting gears. Depress further to engage the brake.
5. The gear shift lever provides three forward speeds and one reverse. The lever should be in neutral when the engine is stopped.
6. A valve under the fuel tank must be opened before starting and should be turned off when stored.

HOW TO MOVE THE TRACTOR

With the engine running, depress the clutch pedal and move the gear shift lever into the desired speed--you must start from a complete stop in any gear. Slow the engine down before engaging the clutch, then increase the engine speed after the clutch takes hold. Never force the lever. It may be necessary to jog the clutch pedal to align the gears for meshing. Always depress the clutch pedal when shifting gears.

THE TRACTOR AND MOWER HAVE LIMITS

Observing the limits of the tractor will help it serve you longer. Overloading and mistreatment can shorten its life or impair its usefulness, just as they can with any tool or machine.

1. The engine is not guaranteed on a slope of more than 45 degrees in any direction, as it will not receive proper lubrication beyond this angle.

2. Keep the mower clean, especially around the blade. A buildup of grass clippings in the blade housing can impair the efficiency of the mower and cause uneven cutting.

3. If the tractor stalls due to an overload, but the engine continues to run, shift immediately to neutral and start out slowly. Failure to do this will cause excessive belt wear or breakage.

4. Do not operate the mower with the blade out of balance.

5. Avoid pulling loads that are so heavy they cause the drive belt to slip.

6. If the engine stalls due to overload, disengage the blade clutch and shift to neutral before restarting. Then, find out what caused the overload, and avoid it to make it easier when starting out again.

PUT YOUR MOWER TO WORK

CHOOSE THE RIGHT CUTTING HEIGHT

1. In general, use the same cutting height you have used before. You know what height is best for your own lawn.

2. When first using your mower, cut the grass a little longer than you did before, until you're sure that the greater cutting width will not cause scalping due to irregularities in the lawn.

3. If the grass is high, or if it contains lots of moisture, take a first cut with the blade set high. Then finish cutting with a lower blade setting. This gives better distribution of the clippings and provides a cleaner second cut.

4. It is possible, by using care, to cut grass that is extremely high or wet. Set the blade at its highest position, and use the lowest drive speed. Move into the area cautiously. Take a cut only half the width of the mower at each pass. Wet clippings may clog the mower housing, causing the blade to stall.

HOW TO SET CUTTING HEIGHT

1. A pointer under the height adjustment handle indicates the height of the blade. The blade may be set at 1-1/2, 2, 2/1/2, 3 or 3-1/2 inches.

2. To raise the blade, press down on the foot lever with your heel.

3. To lower the blade, place your left thumb on top of the tractor chassis and your fingers under the handle. Lift up on the handle. The entire mower housing will drop slightly. Return the handle to the "down" position. The blade will drop further. Each time you raise and lower the handle, the blade drops one-half inch.

USE THE RIGHT SPEED

1. Use low gear for pulling heavy loads, for mowing in high grass, and for mowing while climbing hills. This allows the blade to maintain a constant RPM, and delivers most of the horsepower to the blade. Low gear also gives you maximum control while trimming.

2. Use second gear for mowing level areas and for climbing hills when you are not using the blade. If second gear results in uneven mowing due to the condition of the grass, shift to low gear.

3. High gear gives a speed of about five miles per hour on a level, hard surface. Use it for transporting the tractor to and from work. Mowing in high gear is likely to be uneven, because at this speed the blade does not have time to lift each blade of grass into cutting position. In addition, so much of the engine's horsepower is absorbed in forward motion that it is comparatively easy to stall the blade.

4. Slow down on turns to avoid sliding sideways.

5. Reverse is just a little slower than second gear. The mower will cut equally well in either forward or reverse.

SAVE MOWING TIME WITH PLANNING

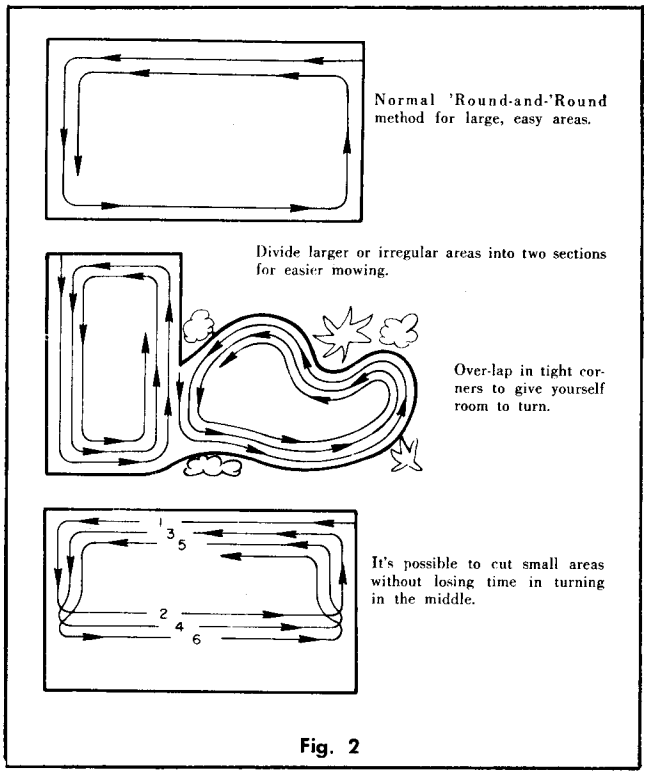

Fig. 2

1. Changing direction wastes time. Plan to keep the mower moving forward as much as possible.

2. Plan for the longest straight runs possible.

3. Save close trimming for the cleanup.

4. Try to work with the clippings discharging onto the already-cut areas, to prevent buildup of clippings in the uncut area. If the grass is unusually long or full of moisture, the clippings could impose an extra load on the blade, or cause uneven mowing because they prevent the grass from rising into the cutting path of the blade.

5. Sometimes it's easier to divide a large or irregular-shaped area into smaller sections to keep the mower working more steadily, or to keep from backing, turning or repeating too often.

6. In a small area, where tight turns would cause lost time in the center if the normal round-and-round methods were used, try the cutting method shown in the illustration. Make the second pass down the center of the area, rather than down the opposite side from the first pass. This allows you to swing wide at the end of each pass, and still cut all of the grass without too much reversing.

7. Try to avoid steep hills. This mower will carry a 200-pound operator up a 30° grade while cutting grass. If you can, angle your cuts across a hill, to reduce the effect of the grade. On steep grades, use low gear.

HOW TO KEEP YOUR TRACTOR WORKING FOR YOU

CAUTION

Always remove the battery from electric start tractors, to avoid spillage of the electrolyte, before servicing the unit. Replace battery before attempting to operate the engine. Do not over-fill battery, engine or transmission.

The simple service required for your mower will result in longer life and dependable operation.

LUBRICATION

1. When lubricating the chassis, block the rear wheels up to provide access to the lubrication points and apply a drop or two of oil to all pivot points in the steering, brake and clutch linkages. (Standing the tractor on the back wheels will cause oil to enter the cylinder, resulting in extremely hard starting or in damage to the engine.)

2. Use an automotive-type grease gun to lubricate the front axle kingpins and front wheel bearings.

3. Observe the engine manufacturer's oil requirements carefully. Failure to do so will not only void the warranty, but it could also result in engine failure. Keep the oil level in the engine in the safe range as indicated on the dip stick.

4. After each 25 hours of operation, squirt a couple of drops of oil on the shift lever to lubricate the top of the shifting ball assembly.

5. If it is necessary to add oil to the transmission (check every 10 hours of operation with the tractor sitting level on its four wheels), use a good grade of No. 90 hypoid gear lubricant. Do not fill above the level of the inspection plug, as this will cause blown oil seals, continual leakage, and possible consequent damage to the transmission.

6. In addition to the lubrication procedures described, it is a good idea to clean all lubrication points of the tractor and mower occasionally, to prevent build-up of dust and foreign matter on the parts.

ADJUSTMENTS AND TIRE PRESSURE

Adjustments required for the mower are simple and infrequent. Adjust the brake band by tightening or loosening the lock nut on the rear end of the brake rod. Carburetor adjustments are covered in the engine manufacturer's instruction manual, which is furnished. No other adjustments are required for the mower.

The tractors use pneumatic tires on the rear, which should be inflated from 16 to 18 lbs. pressure, and uses semi-pneumatic tires on the front wheels. These tires will not require inflation.

WINTERIZATION

Winterization for Storage

When it is time to store the mower for the winter, clean it thoroughly of all grass clippings, mud and dust. Wipe all lubrication points clean and lubricate. Drain the gasoline from the fuel tank and the carburetor, to prevent formation of gummy deposits. Drain the oil from the engine crankcase, and refill with the grade of oil which is recommended for warm-weather operation. Drain and refill the transmission housing, using the grade of oil recommended for summer use.

Block up rear of tractor and remove the spark plug. Put about one to two tablespoons of engine oil into the spark plug hole, slowly, while turning the engine slowly by hand to allow the piston to distribute the oil evenly over the cylinder walls. Replace the spark plug with an old plug which will not be used again, or plug the hole with a cork. (This prevents fouling the good plug with the oil used to preserve the cylinder and piston.)

In the spring, remove the old spark plug or the cork, flush the cylinder with about 1/4 to 1/2 cup of fresh gasoline and blow dry with compressed air. Replace the good spark plug, after being sure it is clean and properly gapped according to the engine manufacturer's instructions. Check the oil in the engine and transmission. Fill the fuel tank. The tractor is now ready for operation.

Winterization for Operation

If the tractor is to be used during the winter months, clean and lubricate in the same manner as for storage. Drain the transmission and refill with a good grade of No. 50 non-detergent motor oil. Drain the engine crankcase and refill with oil as recommended by the manufacturer for the temperature range expected. Be sure the spark plug is clean and properly gapped according to the engine manufacturer's instructions.

In the spring, drain and refill the transmission and engine crankcase with the normally-recommended weights of oil, and service the entire tractor carefully, according to the instructions in this manual.

BLADE MAINTENANCE

It is important that the blades be kept razor-sharp and in balance. Dull blades waste power, and do a poor grass-cutting job. Blades which are out of balance impose too-high a sideways load on their bearings, and cause dangerous vibrations.

When sharpening blades, take equal amounts of metal off both cutting edges. Replace blades which show any signs of cracks or crystallization, to prevent their disintegration at high rotating speeds.

Inexpensive blade balancers are available, to assure that the blades are in balance after sharpening. In case sharpening results in an out-of-balance blade, grind some more metal off heavy end.

Remove and replace the blades as described under "Removal and Replacement of Parts".

LUBRICATION CHART

LUBRICATION POINT	LUBRICANT TO USE	HOW OFTEN
1. Transmission	Good Grade of No. 90 Gear Lubricant	Once a season
2. Gearshift Ball	Automotive Engine Oil	25 hours
3. Blade Clutch Lever Pivot	Automotive Engine Oil	25 hours
4. Blade Clutch Idler Pulley Bearing	Automotive Engine Oil	25 hours
5. Front Frame Pivot	Automotive Engine Oil	25 hours
6. Kingpin Bearings	Automotive Chassis Grease	Twice a season
7. Steering Linkage Pivot Points	Automotive Engine Oil	25 hours
8. Front Wheel Bearings	Automotive Chassis Grease	25 hours
9. Pivots of Clutch and Brake Pedal Linkage	Automotive Engine Oil	25 hours
10. Tractor Drive Belt Idler Arm Pivots	Automotive Engine Oil	25 hours
11. Tractor Drive Belt Idler Pulley Bearing	Automotive Engine Oil	25 hours
12. Blade Clutch Handle Pivots	Automotive Engine Oil	25 hours
13. Steering Column Bearing	Automotive Engine Oil	25 hours
Blade Height Adjustment (Not Illustrated)	Automotive Engine Oil	25 hours
Blade Spindle Bearings (Not Illustrated)	Do Not Lubricate-Sealed Lubricants Last Life of Bearings	At Overhaul
Engine Crankcase	See Engine Manufacturer's Instructions	25 hours

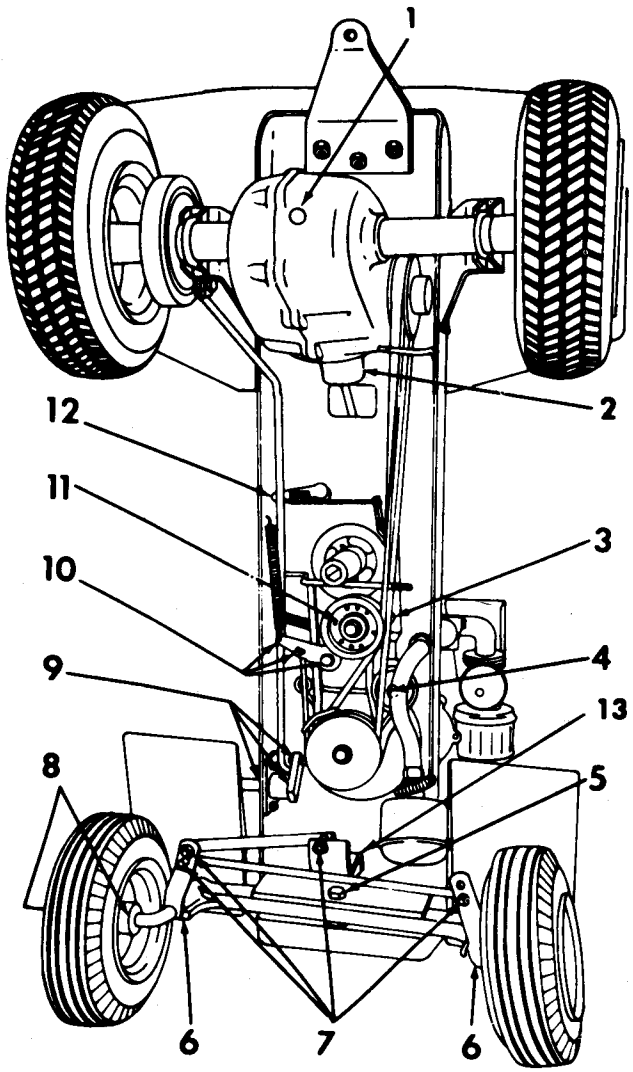

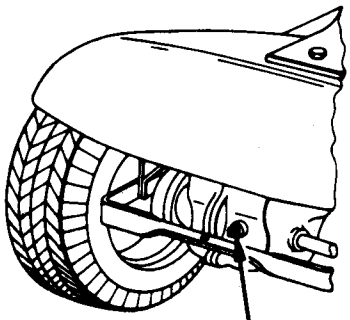

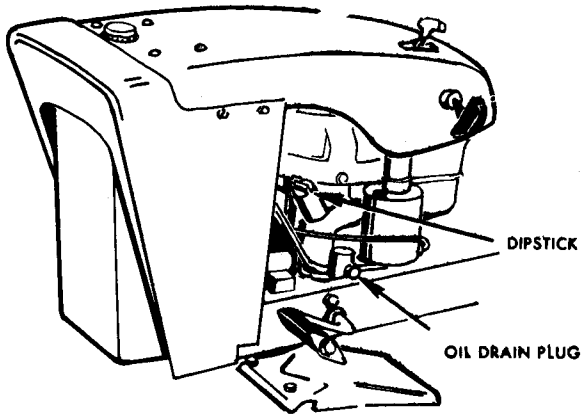

Lubrication Points

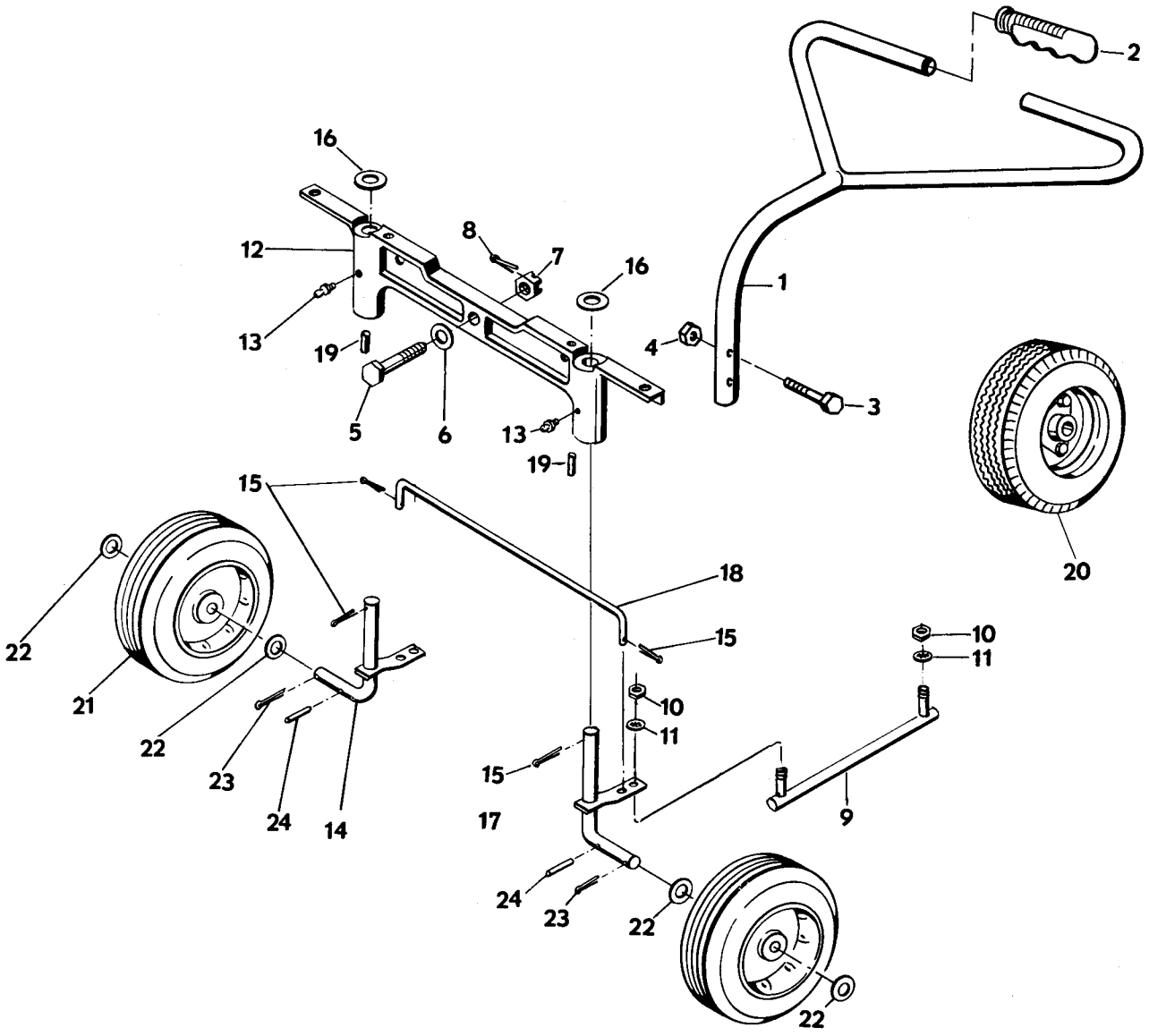

FRONT END AND WHEELS

Ref. No.	Part No.	Description	Qty.
1	7-0300	Handle	1
2	235-17(s)	Handle Grip	2
3	322-6	Bolt	2
4	32152-1(s)	Nut	2
5	7-0123	Bolt	1
6	3256-6	Washer Plain	1
7	32136-3	Nut Castellated	1
8	3272-7	Pin Cotter	1
9	7-0124	Ball Joint Assy	1
10	3219-3	Nut	2
11	3253-21	Lockwasher	2
12	7-0173	Housing Front Axle	1
13	302-43(s)	Grease Fitting	2
14	7-0174	Axle Assy Front R. H	1
15	3272-7	Pin Cotter	4
16	7-0131	Washer	2
17	7-0175	Axle Assy Front L. H	1
18	7-0176	Rod Tie	1
19	32121-11	Roll Pin	2

Ref. No.	Part No.	Description	Qty.
		WHEEL GROUP	
20	241-96(s)	Wheel Assy Rear	2
		(Consists of)	
	231-48(s)	a. Tire	1
	232-27(s)	b. Valve Core	1
	242-38	c. Rim	1
21	241-85(s)	Wheel Assy Front	2
		(Consists of)	
	256-170(s)	a. Bearing	2
	302-5	b. Grease Fitting	1
22	7-0131	Washer	4
23	3272-11	Cotter Pin	2
24	32121-70(s)	Pin	2

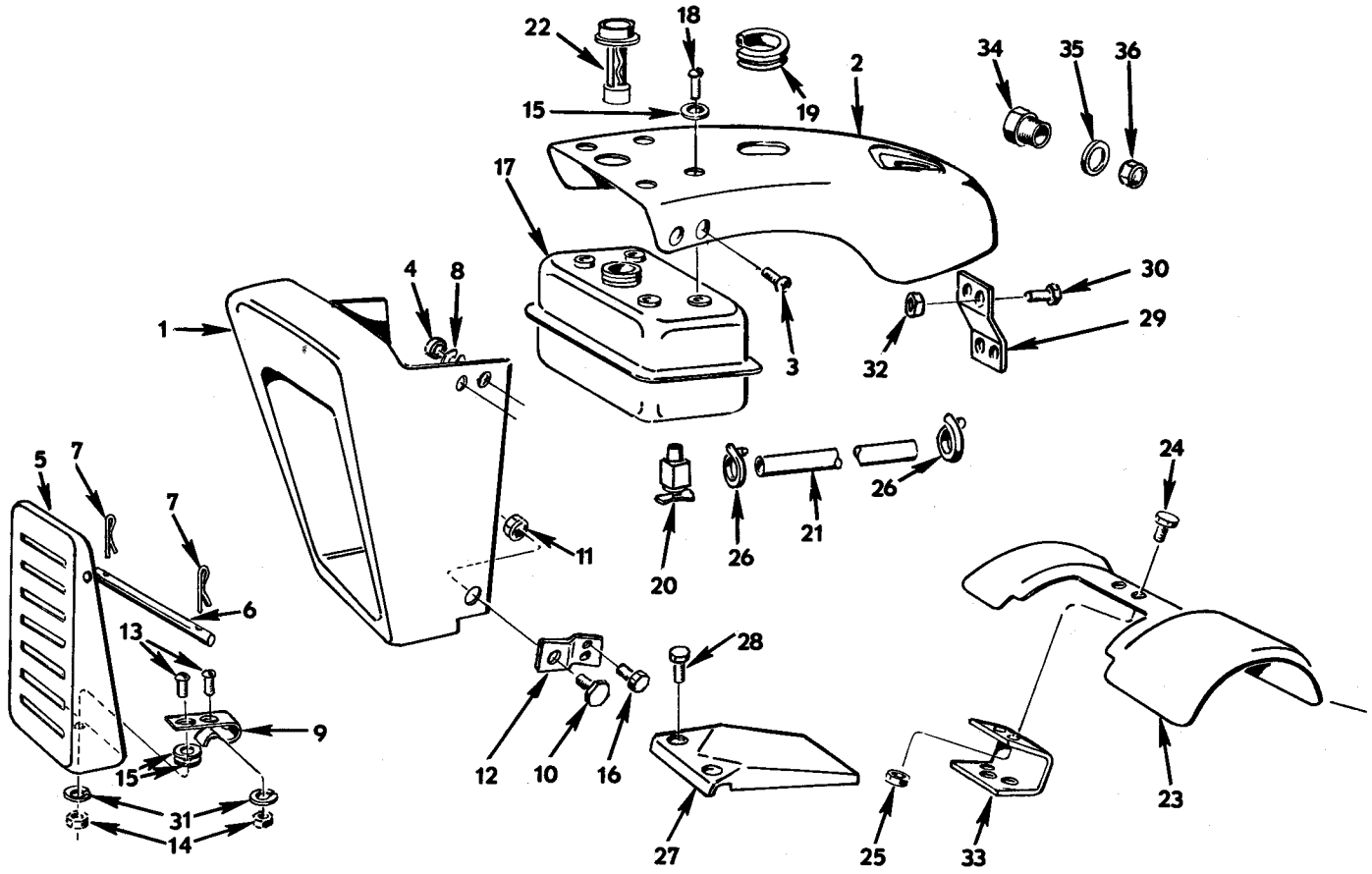

HOOD AND FENDER

Ref. No.	Part No.	Description	Qty
1	7-0220	Hood front	1
2	7-0226	Hood rear	1
3	32122-42 (s)	Truss Screw	4
4	3217-5	Nut	4
5	7-0221	Hood Grille	1
6	7-0222	Tie Rod	1
7	3272-7	Cotter Key	2
8	3254-8	Washer, Shakeproof	4
9	7-0223	Spring Clip	1
10	7-0305	Screw	2
11	32152-1(s)	Nut	2
12	7-0225	Spacer R. H. (not shown)	1
	7-0224	Spacer L. H.	1
13	3291-5	Screw	2
14	3219-14	Nut	2
15	3256-16	Washer	6
16	32140-51(s)	Screw	4
17	7-0212	Gas Tank	1
18	32122-42 (s)	Screw Truss	4

Ref. No.	Part No.	Description	Qty
19	7-0301	Grommet	1
20	304-88(s)	Shut off valve	1
21	7-0213	Hose	1
22	7-0214	Gas Gauge	1
23	7-0215	Fender Rear	1
24	323-4	Bolt	2
25	32152-2(s)	Nut	2
26	2412-20	Hose clamp	2
27	7-0217	Fender Front	2
28	32104-83(s)	Bolt	4
29	7-0218	Rear Hood Support	1
30	321-6	Bolt	2
31	3253-17	Lockwasher	2
32	32152-4(s)	Hex Conelok	2
33	7-0216	Support	1
34	7-0245	Fitting-Recoil Starter	1
35	3255-3	Washer-Lock	1
36	3220-6	Nut	1

CHASSIS ASSEMBLY

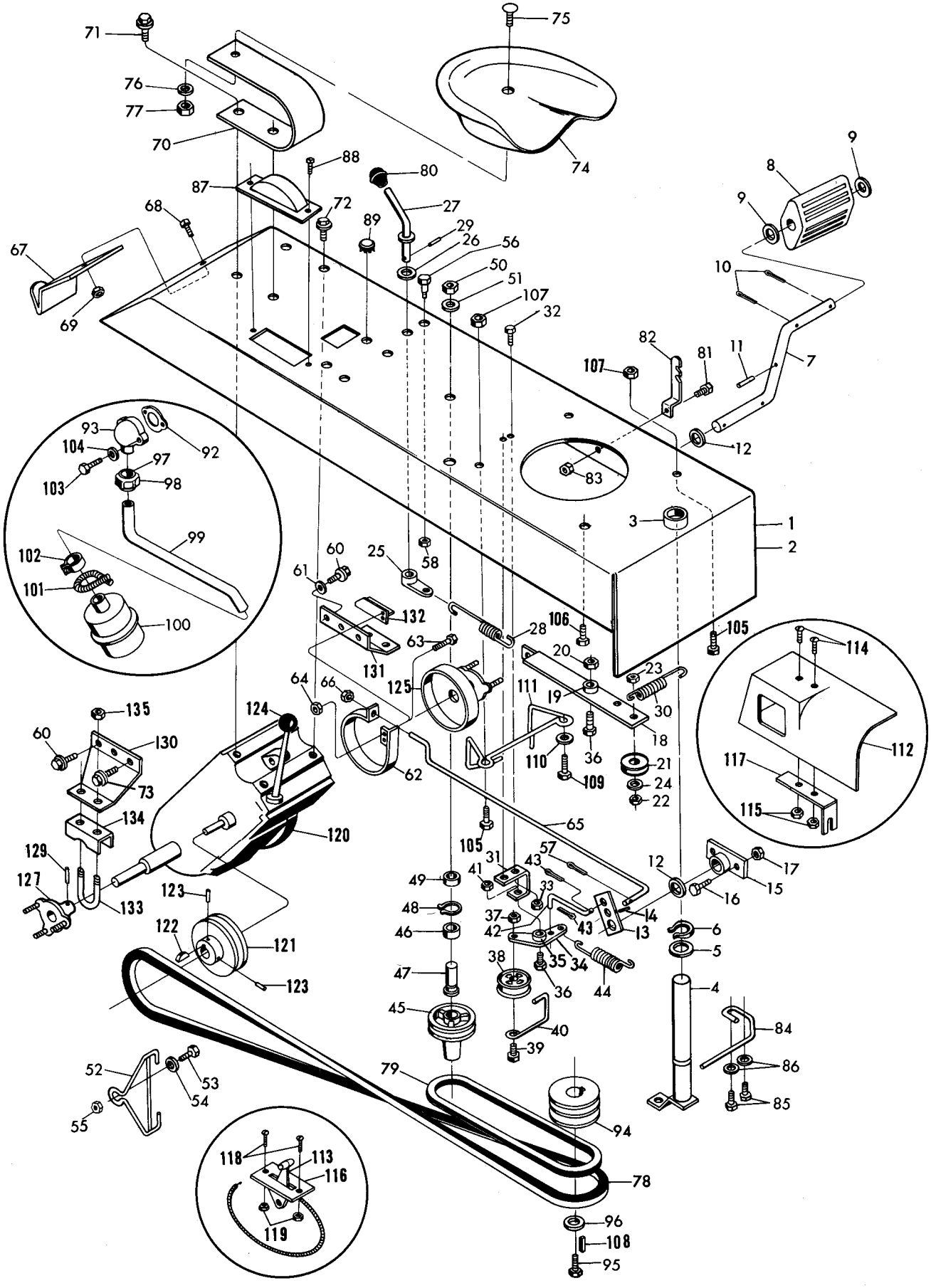

Ref. No.	Part No.	Description	Qty.
		CHASSIS GROUP	
1	7-0121	Chassis Assy	1
2	7-0310	Chassis Assy Electric	1
3	256-167(s)	Bearing Steering	2
4	7-0125	Column	1
5	7-0126	Washer	1
6	32120-72	Snap Ring	1
7	7-0127	Arm Clutch	1
8	7-0128	Pedal	1
9	7-0130	Washer	2
10	3272-7	Pin Cotter	3
11	32121-4	Roll Pin	1
12	7-0131	Washer	2
13	7-0132	Arm Clutch	1
14	32121-71(s)	Pin,Roll	1
15	7-0133	Housing Pedal Arm	1
16	321-4	Bolt	2
17	32152-4	Nut	2
18	7-0134	Brake Arm (with bushing)	1
19	256-168(s)	Bushing	1
20	32152-1(s)	Nut	1
21	7-0136	Idler Pulley	1
22	323-7	Bolt	1
23	3218-3	Nut	1
24	7-0052	Washer Flat	1
25	7-0137	Lever Blade Control	1
26	3290-212	Washer Wave	1
27	7-0138	Rod Assy Blade Control	1
28	7-0140	Spring Blade Control	1
29	32121-50	Pin Roll	1
30	7-0141	Spring Idler	1
31	7-0143	Bracket Clutch	1
32	322-3	Bolt	2
33	32152-1(s)	Nut	2
34	7-0144	Clutch Lever (with bushing)	1
35	256-168(s)	Bushing	1
36	7-0135	Bolt Shoulder	2
37	3218-3	Nut	2
38	7-0145	Idler Pulley	1
39	323-9	Bolt	1
40	7-0146	Retainer Belt	1
41	32152-1(s)	Nut	1
42	7-0147	Rod Clutch	1
43	3272-7	Pin Cotter	2
44	7-0141	Clutch Spring	1
45	7-0190	Pulley Blade	1
46	251-5	Bearing	1
47	7-0191	Adapter	1
48	32151-18(s)	Snap Ring	1
49	7-0150	Spacer	1
50	3220-6	Nut	1
51	3253-8	Washer	1
52	7-0151	Guide Belt Rear	1
53	321-4	Bolt	1
54	7-0152	Washer Flat	1
55	32152-4(s)	Nut	1
56	7-0153	Stud Screw	1
57	3272-11	Cotter Pin	1
58	3296-39	Nut	1
60	32140-51(s)	Bolt	4
61	7-0024	Washer Flat	6
62	7-0155	Brake Assy L. H.	1
63	321-3	Bolt	2
64	32152-4(s)	Nut	2
65	7-0156	Rod Brake	1
66	3296-39	Nut	1
67	7-0157	Hitch Chassis	1
68	323-6	Bolt	3
69	32152-2(s)	Nut	3
70	7-0158	Spring Seat	1
71	32140-52(s)	Sems Unit	2
72	32140-33	Bolt	2
73	32140-45	Bolt	2

Ref. No.	Part No.	Description	Qty.
74	351-7	Seat	1
75	3233-1	Bolt Carriage	1
76	3253-7	Lockwasher Spring	1
77	3218-5	Nut	1
78	7-0161	Belt Special	1
79	7-0162	Belt Special	1
80	233-18	Knob	1
81	7-0163	Bolt Shoulder	1
82	7-0164	Strap Brake	1
83	32152-1(s)	Nut	1
84	7-0165	Belt Guide Center	1
85	322-3	Bolt	2
86	3256-3	Washer Flat	2
87	7-0166	Cover	1
88	32140-50(s)	Sems Screw	2
89	2410-7	Plug Button	4
		ENGINE GROUP	
*	221-273(s)	Engine (Lauson 5HP) V50-60002 D	1
*	221-274(s)	Engine(Lauson 5HP Elec. Start) V50-60003 D	1
92	7-0230	Gasket	1
93	7-0231	Manifold	1
94	7-0232	Pulley Engine	1
95	3211-5	Bolt	1
96	7-0233	Washer	1
97	7-0234	Ferrule	1
98	7-0235	Nut	1
99	7-0236	Exhaust Pipe	1
100	2212-15(s)	Muffler	1
101	7-0237	Spring	1
102	2412-28(s)	Muffler Clamp	1
103	322-9	Bolt	2
104	3253-4	Washer	2
105	32141-83(s)	Bolt	2
106	322-3	Bolt	1
107	32152-1(s)	Nut	2
108	7-0238	Key Sq	1
109	322-5	Bolt	1
110	3256-3	Washer	1
111	7-0240	Guide Belt	1
112	7-0241	Carburetor Cover	1
113	7-0242	Throttle & Choke Control	1
114	3291-5	Bolt	4
115	32149-8(s)	Nut	4
116	7-0243	Throttle plt	1
117	7-0244	Brkt Carb	1
118	32122-43(s)	Screw	2
119	32149-6	Nut	2
		TRANSMISSION GROUP	
120	7-0154	Trans. Complete	1
121	7-0195	Pulley Trans	1
122	3257-23	Key Woodruff	1
123	3242-13(s)	Set Screw	2
124	233-18	Knob Shift Lever	1
125	7-0204	Hub L. H. with Brake Drum	1
*	242-32	Nut tapered	3
127	7-0205	Hub R. H. less Brake Drum	1
*	242-32	Nut tapered	3
129	32121-69(s)	Pin Drivelok	2
130	7-0198	Brkt. Wheel Mtg. R. H.	1
131	7-0200	Brkt. Wheel Mtg. L. H.	1
132	7-0201	Brkt. Brake Mtg.	1
133	7-0202	U Bolts	2
134	7-0203	Brkt. Axle	2
135	32152-5(s)	Nut	4

* NOT ILLUSTRATED

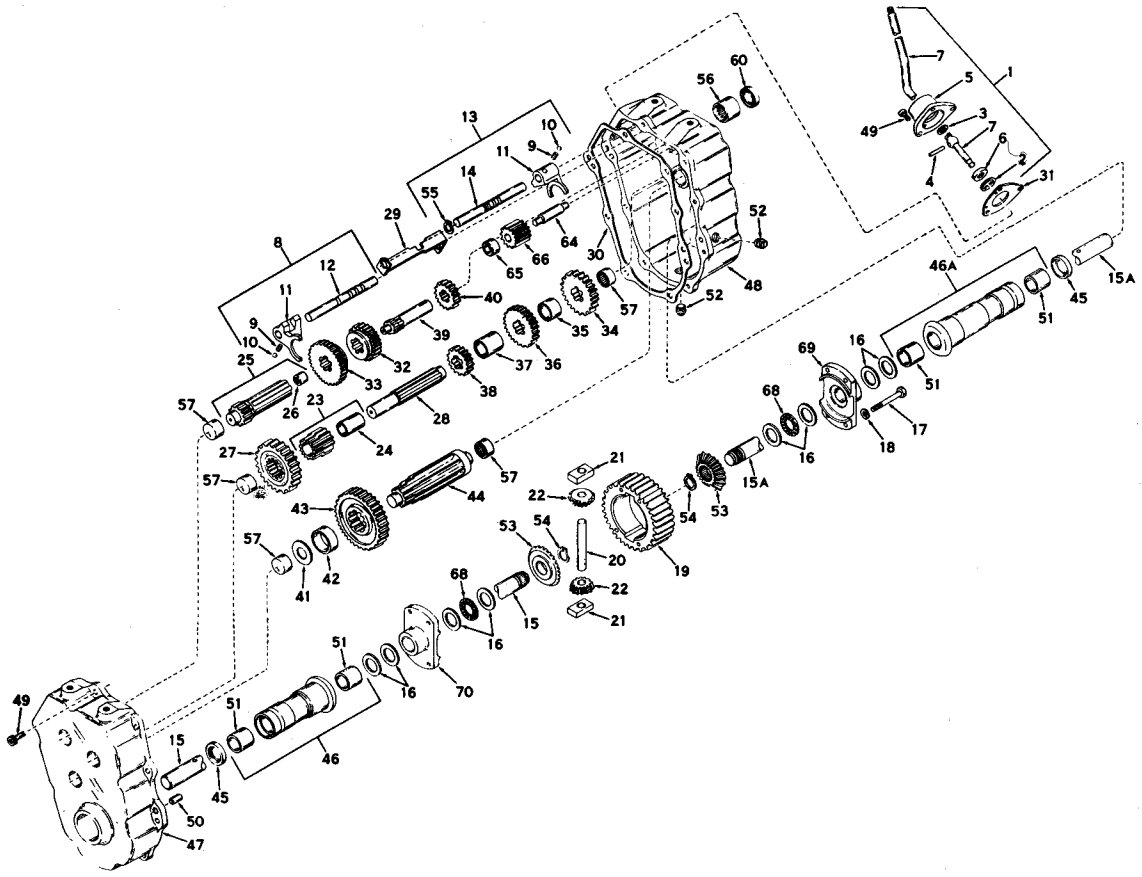

TRANSMISSION ASSEMBLY

Ref. No.	Part No.	Description	Qty.
1	2119-376(S)	Lever & Housing Assy., Shift (Incl. Nos. 2 thru 7)	1
2	2119-229	Ring, Snap	1
3	237-18	Ring, Quad	1
4	32121-6	Pin, Roll	1
5	2119-377(S)	Housing, Shift lever	1
6	2119-228	Keeper, Shift lever	1
7	2119-327(S)	Lever, Shift	1
8	2119-328(S)	Rod Assy., Shift (Incl. Nos. 9 thru 12)	1
9	2119-182	Spring	2
10	255-1	Ball, Steel	2
11	2119-183	Fork, Shifter	2
12	2119-231	Rod, Shifter	1
13	2119-329(S)	Rod Assy., Shift (Incl. Nos. 9, 10, 11, 14, 55)	1
14	2119-230	Rod, Shifter	1
15	2119-378(S)	Axle, L. H.	1
15A	2119-379(S)	Axle, R. H.	1
16	2119-380(S)	Washer, Thrust	8
17	321-18	Screw, Hex hd. cap 1/4-20 x 2-1/4	4
18	3253-3	Lockwasher, 1/4"	4
19	2119-248	Gear, Ring	1
20	2119-190	Pin, Drive	1
21	2119-247	Block, Drive	2
22	2119-332(S)	Pinion, Bevel	2
23	2119-331(S)	Pinion & Bushing Assy. (Incl. No. 24)	1
24	2119-381(S)	Bushing	1
25	2119-334(S)	Shaft Bearing Assy., Shifter (Incl. No. 26)	1
26	2119-195	Bearing	1
27	2119-240	Gear, Idler	1
28	2119-383(S)	Shaft, Idler	1
29	2119-384(S)	Stop, Shifter	1
30	2119-337(S)	Gasket, Case to Cover	1
31	2119-338(S)	Gasket, Shift Lever housing	1
32	2119-201	Gear, Shifting	1

Ref. No.	Part No.	Description	Qty.
33	2119-202	Gear, Shifting	1
34	2119-339(S)	Gear, Spur (26 teeth)	1
35	2119-340(S)	Spacer	1
36	2119-341(S)	Gear, Spur (22 teeth)	1
37	2119-342(S)	Spacer	1
38	2119-343(S)	Gear, Spur (16 teeth)	1
39	2119-385(S)	Shaft, Input	1
40	2119-209	Spur Gear, Input shaft	1
41	2119-210	Washer	1
42	2119-345(S)	Spacer	1
43	2119-243	Gear, Output	1
44	2119-346(S)	Pinion, Output	1
45	2119-386(S)	Seal, Oil	2
46	2119-387(S)	Housing & Bushing Assy., L. H. Axle (Incl. Nos. 51)	1
46A	2119-388(S)	Housing & Bushing Assy., R. H. Axle (Incl. No. 51)	1
47	2119-389(S)	Cover Assy., Transaxle (Incl. No. 57)	1
48	2119-390(S)	Case Assy., Transaxle (Incl. Nos. 56 & 57)	1
49	3274-8	Screw, Socket hd. cap 1/4-20 x 3/4	11
50	2119-239	Pin, Dowel	2
51	2119-391(S)	Bushing	4
52	281-2	Plug Pipe	1
53	2119-357(S)	Gear, Bevel	2
54	2119-255	Ring, Snap	2
55	2119-233	Ring, Snap	1
56	2119-353(S)	Bearing	1
57	2119-352(S)	Bearing	5
60	2119-356(S)	Seal, Oil	1
64	2119-365(S)	Shaft, Reverse idler	1
65	2119-366	Spacer, Reverse idler	1
66	2119-364(S)	Idler, Reverse	1
68	2119-252(s)	Bearing, Thrust	2
69	2119-392(S)	Carrier, Differential	1
70	2119-393(S)	Carrier, Differential	1

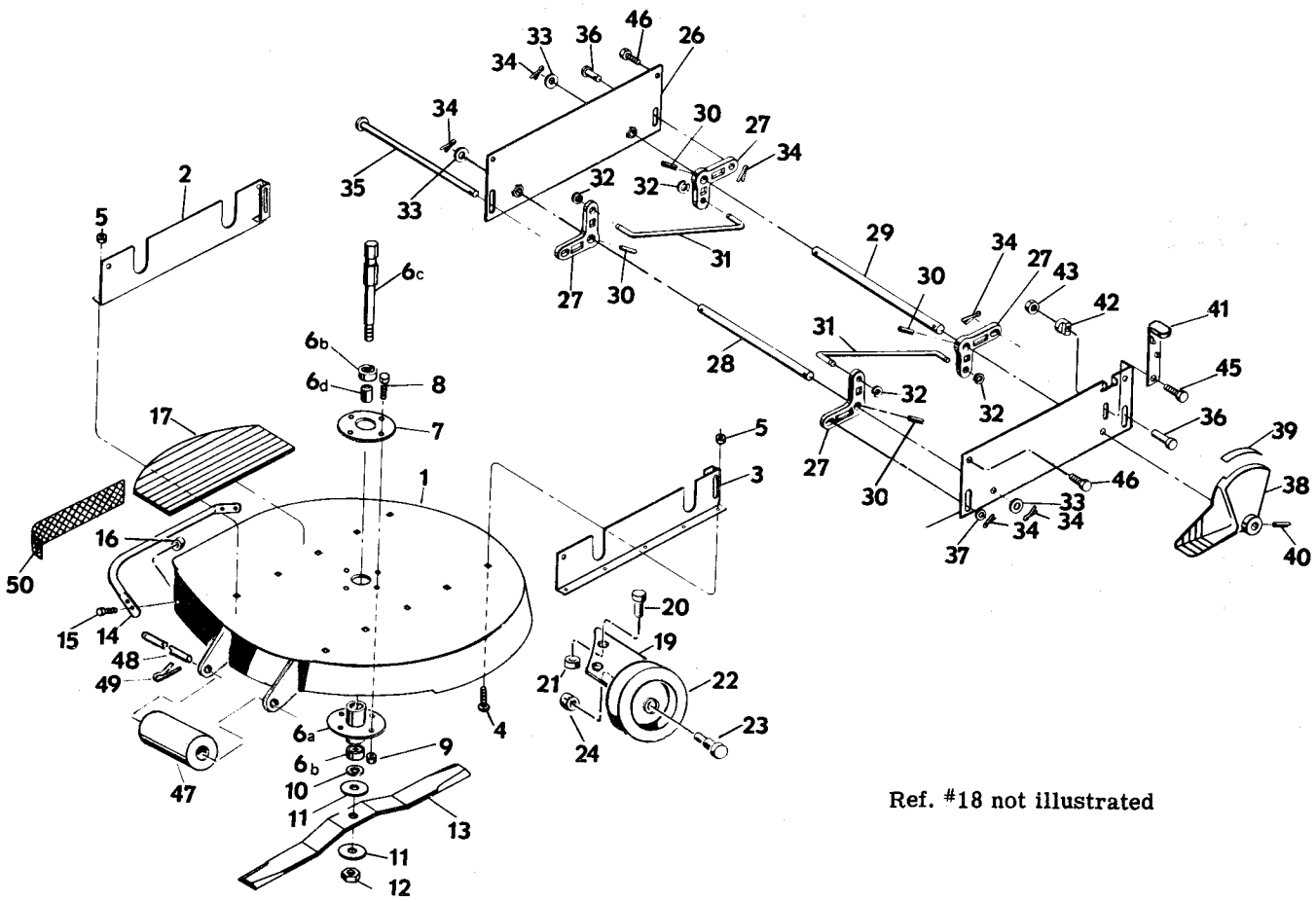

Ref. #18 not illustrated

25-Inch Mower Attachment

Ref. No.	Part No.	Description	Qty.
1	7-0246	Hsg. Weld Assy	1
2	7-0247	Brkt. Assy R. H	1
3	7-0248	Brkt. Assy L. H	1
4	7-0250	Bolt	10
5	32152-1(s)	Nut	10
6	7-0251	Spindle & Hsg. Assy (Consists of)	1
	7-0287	a. Hsg. Spindle	1
	251-5	b. Bearing	2
	7-0288	c. Spindle Assy	1
	7-0290	d. Spacer	1
7	7-0252	Washer	1
8	322-4	Bolt	4
9	32152-1(s)	Nut	4
10	7-0131	Washer	1
11	7-0253	Washer	2
12	32152-6(s)	Nut	1
13	7-0255	Blade	1
14	7-0256	Guard Blade	1
15	3229-11	Bolt	4
16	32152-4(s)	Nut	4
17	7-0257	Pad Foot	2
18	7-0258	R. H. Brkt. Wheel Assy	1
19	7-0260	L. H. Brkt. Wheel Assy	1
20	321-3	Bolt	4
21	32152-4(s)	Nut	4
22	7-0261	Wheel	2
23	7-0262	Bolt Shoulder	2

Ref. No.	Part No.	Description	Qty.
24	32152-2(s)	Nut	2
25	7-0263	Brkt. Mower Hsg. L. H	1
26	7-0264	Brkt. Mower Mtg. R. H	1
27	7-0265	Bell Crank	4
28	7-0266	Shaft Front Pivot	1
29	7-0267	Shaft Rear Pivot	1
30	32121-71(s)	Roll Pin	4
31	7-0268	Link Lift	2
32	32120-35	Snap Ring	4
33	7-0131	Washer Flat	4
34	3272-7	Cotter Pin	6
35	7-0270	Shaft Lift	1
36	7-0271	Pin Lift	2
37	7-0052	Washer	1
38	7-0272	Ratchet Lift	1
39	7-0273	Decal-Cutting Height	1
40	32121-71(s)	Roll Pin	1
41	7-0274	Pawl Lift	1
42	7-0275	Nut	1
43	3219-14	Nut	1
44	3253-17	Lockwasher	1
45	32140-53(s)	Screw	1
46	32140-45(s)	Sems Unit	4
47	7-0276	Roller	1
48	7-0277	Shaft Roller	1
49	3272-7	Cotter Pin	2
50	7-0278	Mulcher Screen	1

REMOVAL AND REPLACEMENT OF PARTS

CAUTION

Before servicing any part of the mower or tractor, disconnect the spark plug wire to prevent accidental starting of the engine. Remove battery from electric start tractors.

BLADES

25-Inch Blade

Block up the tractor 6 inches at the rear end. Disengage the blade clutch, so that the blade brake keeps the spindle from turning. Remove the blade by removing the spindle nut, which has a right-hand thread. Note the positions of the two large washers and one small flat washer, as they must be replaced in the same positions.

When replacing the blade, refer to figure 9. Be sure the blade is installed right side up. If installed upside down it will not cut and will consume too much horsepower. Tighten the spindle nut thoroughly after replacing the blade.

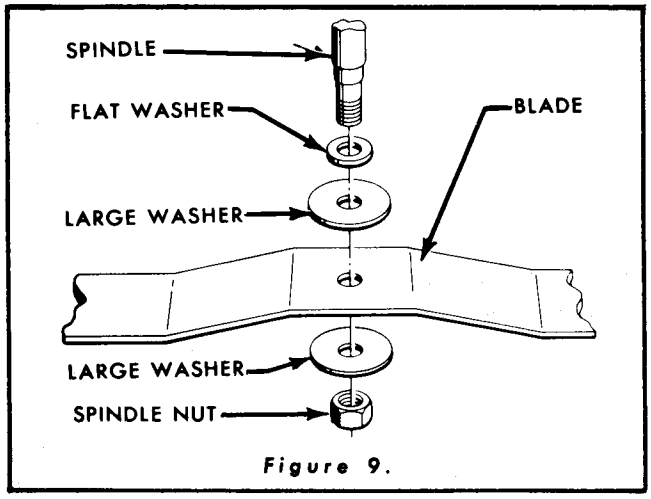

Figure 9.

MOWER ATTACHMENT

Use a 1/2-inch wrench to loosen the four bolts which hold the mower deck to the sides of the tractor chassis. Stand the tractor on its front end and remove the four bolts. Grasp the mower attachment by the center of the blade, and by the rear cross-bar of the height adjustment mechanism, to remove it.

NOTE

To prevent loss of the four bolts, if the tractor is to be used without the mower attachment, reinstall them into the holes and tighten. Do not over-tighten.

To reinstall the mower attachment, again stand the tractor on its front end. Loosen the four bolts holding the blade drive pulley to the chassis. Grasp the mower attachment by the rear cross-bar and the center of the blade. Turn the blade slightly to engage the hexagonal top of the spindle into the hexagonal hole in the bottom of the blade drive pulley on the chassis. Slide the side plates of the mower attachment over the sides of the chassis, and attach with the four 5/16-inch bolts. Retighten the four bolts holding the drive pulley to the chassis. This centers the pulley with respect to the mower attachment.

The mower attachment may be left in place for all attachments but the snow blade.

DRIVE BELTS

NOTE

It is necessary to remove the mower attachment before replacing any of the belts.

Tractor Drive Belt

With the tractor standing on its front end, depress the clutch pedal as far as it will go. This takes the tension off the tractor drive belt. Wring the belt off the engine pulley, disengage it from the belt guides, and remove it from the transmission pulley. (Notice the direction of twist of the belt, so that you can reinstall it more easily in the same position.) See figure 10.

To replace the tractor drive belt, place it over the transmission pulley first, then through the rear belt guide. Twist the belt which leads off the bottom of the transmission pulley one-half turn to the left and place it on the outside of the middle belt guide. Twist the belt which leads off the top of the transmission pulley one-half turn to the left, and place it behind the middle belt guide (between the belt guide and the blade clutch mechanism). Wring the belt around the engine pulley. The vee of the belt should fit into the groove of the engine pulley. Engage the belt on the clutch idler pulley, so that the idler pulley rides on the rear of the belt.

Note that the clutch idler pulley is mounted on its bracket with a slight tilt, in order to properly guide and engage the belt. This tilt is intentional, and should not be disturbed.

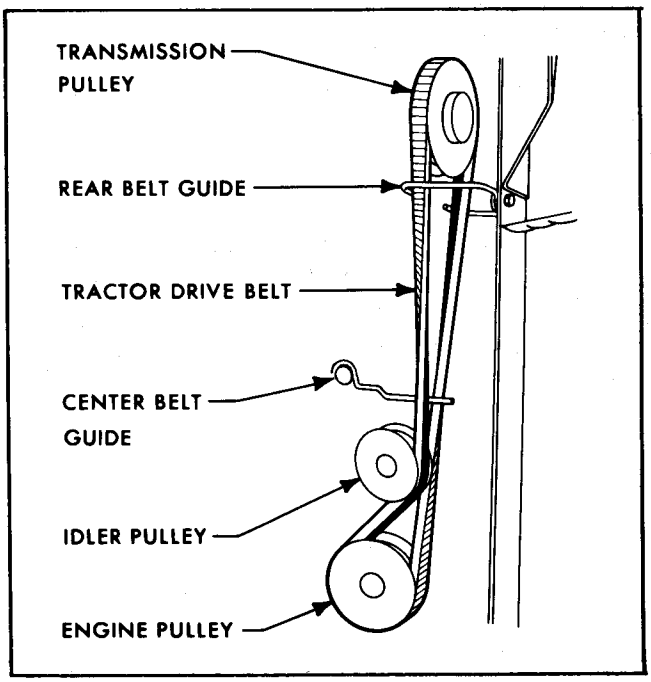

Figure 10.

Mower Drive Belt

Remove the tractor drive belt as described above, for access to the mower drive belt, then remove the 5/16 inch bolt which holds the blade clutch idler arm to the tractor chassis. Wring the mower drive belt over the mower drive pulley and remove from the engine pulley.

Replace the belt first on the engine pulley, then wring it onto the mower drive adapter pulley. Replace the linkage and springs which were disconnected. Replace the tractor drive belt as described above.

BEARINGS

Rear Axle Bearings

Rear axle bearings are contained in extensions of the transmission housing. They are lubricated from within by the transmission lubricant, and can be replaced only on complete disassembly of the transmission.

Bearings of Blade Drive System

The bearings of the blade drive system are mounted in housings which are bolted to the tractor drive chassis or the mower housing. These are located as described below. If replacement of the bearings of the blade drive system is required, remove the belts from around the affected pulleys, and remove the blade if a blade spindle bearing is to be replaced. Refer to the exploded views which illustrate the parts list, for disassembly.

Only if your mower is repaired correctly and if replacement parts really fit can maximum mowing results and safety be expected.

A thorough inspection of your tractor and mower should be made at least once a year.

Locations of the bearings of the blade drive system are as follows:

Blade drive adapter, located in center of chassis underneath.

Blade spindle, located in center of mower housing.

If it is necessary to drive the bearings out of their housings, apply force only on the races which are tight in the housings or on the shafts. Do not transmit, removing or installing, forces through the balls or rollers. Use a soft-headed (leather, rubber or plastic) mallet to drive bearings into or out of position.

TRANSMISSION AND ENGINE

If the transmission should require repair, contact the closest authorized service station.

To remove the transmission from the tractor chassis, first remove the transmission drive belt and disconnect the brake rod from the brake band. Remove the nuts from the two U-bolts which fasten the axle housings to the wheel support brackets. Take out the four bolts which attach the transmission housing to the tractor chassis. This allows the transmission, complete with rear axle housings and wheels, to be removed from the tractor.

To remove the engine, take off the hood, handle bars, and drive belts. (The fuel tank for Lauson engine models will come off with the hood.) Remove the engine pulley by taking out the 3/8-inch bolt which is threaded into the bottom of the engine crankshaft. Do not lose or damage the key which locks the pulley to the engine crankshaft. Disconnect the exhaust pipe coupling nut. Remove the four 5/16-inch bolts which fasten the engine to the engine mounting plate, and lift the engine, with carburetor and fuel system, off the top of the chassis. Do not lose the belt guide which is attached by two of the engine mounting bolts. It is not necessary to remove the exhaust pipe from the chassis.

Repair of the engine should be accomplished by one of the engine manufacturer's authorized service stations.

MULCHER SCREEN

The mulcher screen which you received with your mower can be attached over the discharge opening of the mower deck. With this screen installed, you can ride over your lawn and dispose of dried fallen leaves without effort. The mower blade lifts them up, grinds them into peices small enough to pass through the holes in the screen, and returns them to your lawn as a fine organic mulch.

To install the mulcher screen, remove the shrub bar from the discharge opening of the mower. Shape the screen to the inside of the blade housing, and attach with bolts and nuts which were used to hold the shrub bar to deck.

Better mulching action will result if you use your blade at one of the lower cutting heights. Be sure the leaves are dry before attempting to use the mulching attachment. Wet leaves will not be ground up finely enough to pass through the screen, and will soon clog it.

Operation and Maintainance of the Electric Starter

It is necessary to follow these additional instructions if your lawn mower is equipped with electric starting. Following these instructions will assure you of the best continued benefits of electric starting.

PREPARING FOR OPERATION

The "dry-charged" battery and its container of electrolyte are shipped in separate carton inside the mower carton. Your dealer should have activated, connected and installed the battery. In case this was not done before you received the mower, activate the battery and install it as follows:

1 Remove the battery from its carton. Activate it by pouring the electrolyte into the cells. Fill each cell to the level of the circle indicator in the fill tube.

2. Set the battery on the floor beside the mower. Attach the red cable to the red (positive) terminal of the battery and the yellow cable to the yellow (negative) terminal. Use the hardware furnished.

3. Slide the battery into the bracket provided at the front of the mower, and tighten the hold - down clamp.

4. Check the charge with a battery hydrometer. If the specific gravity is below 1.265 to 1.285, have the battery slow-charged at a 2-amp. maximum rate until the full charge is reached. This is particularly important for cold weather starting.

Overloading of the electric starting equipment, may be prevented by careful preparation of the engine. and will provide better service from your mower.

1. Keep the crankcase filled to the proper level. If temperature is above 40° F, use No. 30 weight regular grade automobile engine oil.

2. If the temperature is below 40° F, disregard the nameplate instructions and fill the crankcase to the proper level with No. 10 weight regular grade automobile engine oil.

3. Use a regular grade of FRESH gasoline. Keep the gasoline tank full when the mower is not in use, to help prevent water condensation.

4. Be sure the carburetor is adjusted for easiest starting.

STARTING WITH THE ELECTRIC STARTER

Because of size requirements, the starter has certain operating limits and cold weather limitations. In temperatures below 20° F it may be necessary to start the engine with the recoil starter. See the special instructions for cold weather starting. In normal temperatures, start the mower as follows:

1. Be sure the transmission is in neutral, the blade clutch is disengaged, and the clutch is depressed and locked with the parking brake. This relieves the starter of extra load.

2. Be sure the engine speed control lever is set properly for starting.

3. If the engine is against the compression, pull it past the compression stroke with the recoil starter rope.

4. Turn the key to start cranking the engine.

5. A self-resetting cutout switch prevents damage to the starter motor from over-heating. Continuous cranking will cause this switch to open, stopping the starter. If this happens, allow the starter to cool until the switch contacts close.

COLD WEATHER STARTING

For starting the engine of your lawn mower in cold weather, follow these instructions.

ENGAGE PARKING BRAKE

1. Follow the "Preparing for Operation" instructions carefully.

2. Be sure the battery is at full charge and all connections are tight.

3. As the temperature drops, battery efficiency also drops, even though the battery is fully charged. This increases the amperage draw of the starter, and may cause the cutout switch to open after only a momentary cranking period. (This is because an electric motor heats rapidly under abnormal amperage conditions.) If this happens in cold weather, it usually means that the starter has reached its cold weather limitations. and does not necessarily indicate a defective starter motor.

4. In moderately cold weather (about 20° F), be sure the engine speed control lever is set properly, and all load is removed from the engine. It may also be necessary to turn the engine through two or three revolutions with the recoil starter to break the oil film seals and reduce the friction.

5. If the engine has stood idle for a prolonged period in cold weather, it will usually have to be started with the recoil starter.

PROTECT THE STARTER THROUGH PROPER USE

To prevent damage to the starter motor and battery, use the starter carefully, according to the following cautions. The warranty is void if the time limits are disregarded.

1. Never run the starter for more than ten seconds continuously.

2. Between ten-second cranking periods, allow one full minute.

3. Do not repeat the ten-second cranking period more than five times. If the engine does not start within five cranking and waiting periods, there is a mechanical reason. Check and correct.

4. Allow fifteen minutes before trying to start the engine, after using up the five 10-second cranking intervals. Failure to observe these time limits causes expensive permanent damage to the starter motor.

TAKE GOOD CARE OF THE ELECTRICAL SYSTEM

Proper care of the electrical system will result in long life of the parts and good service from the electric start.

1. Check the battery once a month for state of charge. Recharge the battery if the specific gravity of the cells falls below 1.225, or if the open circuit voltage of the cells drops below 2.04 volts. Use a maximum charging rate of 2 amps. Keep batteries at or near full charge for best performance.

2. While the battery is in use, check it once a week for electrolyte level. Keep the electrolyte above the separators, but fill only to the circle indicator, not into the vent tube. Use only distilled or approved water for filling.

3. Do not add battery dopes, additives, or acid. Such additions void the battery guarantee.

4. Keep the battery clean by brushing off dirt, dust and grass clippings after use. If corrosion develops on top of the battery, clean it with water and baking soda. Be sure to keep the vent plugs in the cells while cleaning. Coat the cleaned terminals with petroleum jelly (Vaseline) to prevent further corrosion.

5. Batteries may be stored without damage if they are fully charged when placed in storage. Store in a dry place, where the temperature is between 32° F and 60° F. Keep the battery away from extreme heat or cold. Recharge the battery before placing it in service.

6. Check stored batteries every two months during storage. Recharge immediately, if the open circuit voltage drops below 2.04 volts, or the specific gravity drops below 1.225.

The battery charging system consists of an alternator built into the engine's ignition magneto, and two rectifiers for changing the alternator's AC current to DC for charging the Battery. Regulation of charging rate is not automatic, but is usually satisfactory for most conditions your lawn mower will operate under. To assure good service from the battery charging system, take care of it as follows:

1. Never run the engine with the battery disconnected or removed, unless the rectifiers are removed from the rectifier panel which is on the side of the engine. Failure to do this will burn out the rectifiers. The rectifiers are built so that they cannot be re-installed in the wrong positions in their holding clips.

2. If the battery fumes or boils, it is being over-charged. To stop the over-charging, remove one of the rectifiers from the rectifier panel. This cuts the charging current to half the normal rate. Over-charging may result from continued long operation of the mower, and is normal under these conditions.

Operate the lawn mower for cutting grass and any of its many other uses exactly as described for the machines without electric starting.

CAUTION

To protect against spillage of electrolyte from the battery, do not stand the mower on its front end for servicing, or lay it on its side, without first removing the battery.

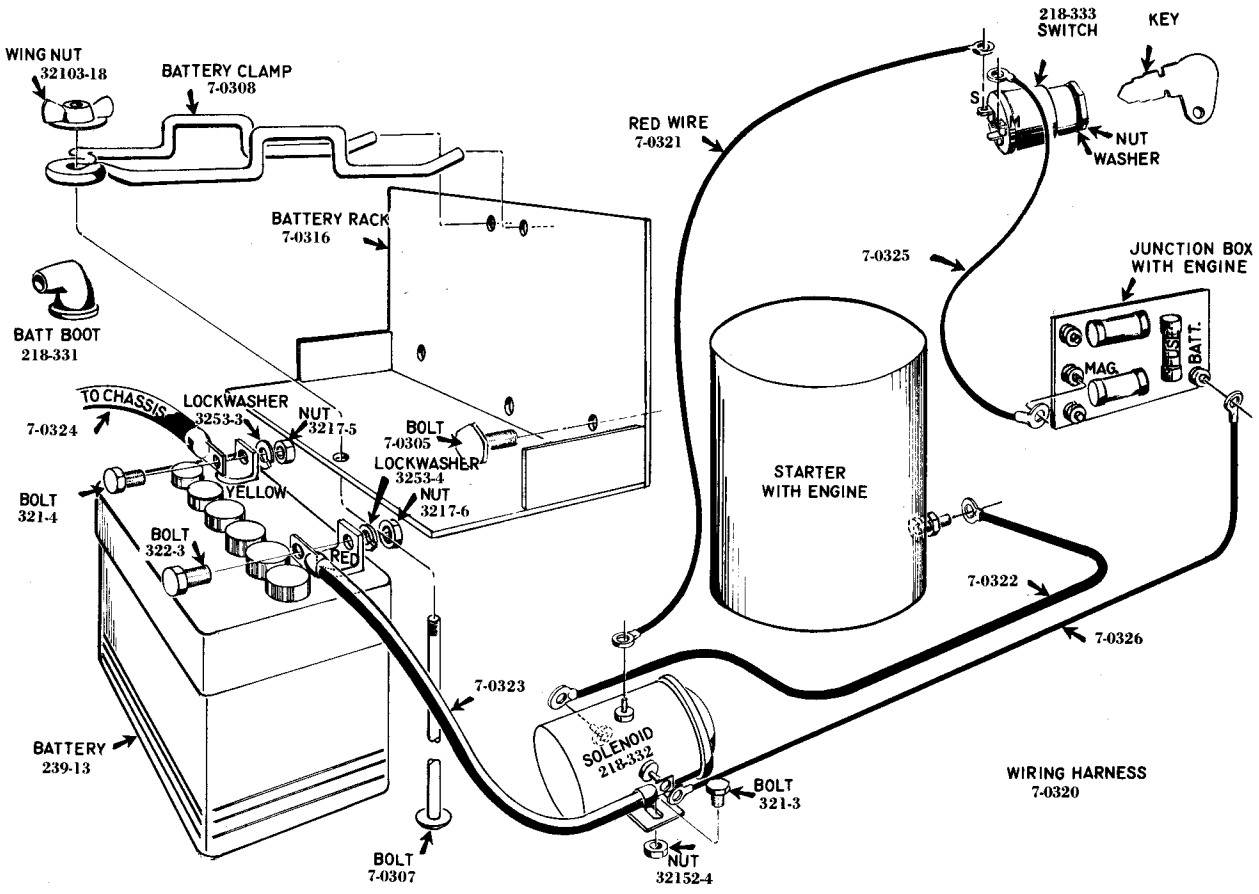

ELECTRIC START GROUP

PRODUCT CHANGES

In an effort to make improvements available to Toro owners as quickly as possible, minor changes are incorporated into Toro's products from time to time that do not become immediately shown in the Reference Drawing and Parts List. If such a change apparently has been made in your unit, which is not reflected in your manual, see your Toro distributor or his authorized Toro service dealer for information and parts numbers.

IMPORTANT ORDERING INSTRUCTIONS

Repair parts are available from your TORO distributor. To insure getting correct parts without delay, please furnish the following information:

1. Serial number of your product as shown on the name plate.
2. Part number, description and quantity of each part required.
3. Name and address where parts are to be shipped.
4. Do NOT order by reference number, use part number only.

Warranty

The Manufacturer warrants each new piece of equipment sold to be free of defects in material and workmanship. For one year from the purchase date of consumer line equipment or 45 days if sold for commercial use, Toro Manufacturing Corporation will repair or replace for the original purchaser, free of charge, through any Authorized Service Dealer, any part or parts found at our factory in Minneapolis, Minnesota, to be defective under normal use and service. All institutional equipment is warranted for ninety (90) days from the purchase date.

This Warranty does not obligate the Manufacturer to bear the cost of transportation charges in connection with the replacement or repair of defective parts -- nor shall it apply to a machine upon which repairs or alterations have been made, unless authorized by the manufacturer.

This Warranty does not include nor cover standard accessories produced by other manufacturers. Such accessories have separate warranties by their respective manufacturers . . . and repair or exchange will be made on the basis of such warranties, and the policies authorized by them shall be adhered to.

This Warranty is in lieu of all other warranties expressed or implied.

SAFETY TIPS FOR RIDING LAWN MOWERS, GARDEN TRACTORS AND ATTACHMENTS

Improper use of riding lawn mowers, garden tractors and attachments on the part of the operator can result in injury. To reduce this possibility, give complete and undivided attention to the job at hand.

1. Know the controls and how to stop quickly — READ THE OWNER'S MANUAL.

2. Do not allow children to operate machine; nor adults to operate it without proper instruction.

3. Clear work area of objects which might be picked up and thrown.

4. Disengage all clutches and shift into neutral before starting motor. Keep hands, feet and clothing away from power driven parts.

5. Do not carry passengers. Keep children and pets a safe distance away.

6. Never direct discharge of any material toward bystanders nor allow anyone near machine while in operation.

7. Disengage power to any attachment and stop motor before leaving operator position.

8. Take precautions when leaving machine unattended (to avoid accidental starting, rolling away, accidental dropping of any attachment, etc.)

9. Disengage power to any attachment whenever it is not in use or when traveling from one work area to another.

10. Stay alert for holes and other hidden hazards.

11. Know what is behind you before backing up.

12. Beware of steep slopes, reduce speed on all side slopes and sharp turns to prevent tipping or losing control.

13. Don't stop or start suddenly when going uphill or downhill.

14. Do not drive close to a ditch or creek.

15. Do not attempt to operate the machine when you are not in the driver's seat.

16. Do not attempt to get off of the machine while it is moving.

17. Use extra care when pulling loads or using heavy equipment. (Refer to your owner's manual.)

18. Watch out for traffic when near roadways.

19. Handle gasoline with care — it is highly flammable.

   A. Use approved gasoline container.

   B. Never add gasoline to a running motor — fill tank out of doors and wipe up spilled gasoline.

   C. Replace gasoline cap securely.

   D. Open doors if motor is run in garage — exhaust gases are dangerous.

20. Keep machine in good operating condition and keep safety devices in place. Use guards as instructed in owner's manual.

21. Disengage power to any attachment and stop motor before making repairs or adjustments.

These safety suggestions are recommended by Outdoor Power Equipment Institute and Toro Mfg. Corp.

Outdoor Power Equipment Institute, Inc. SPONSORED

CONFORMS TO ANSI ASA STANDARD

TORO POWER MOWERS

Toro power mowers and Power Handle implements are designed and built to give years of precision performance . . . to make them "the best you can buy." And there's over 50 years of manufacturing experience to back them up.
One of Toro's most important objectives — and one which has helped make Toro the world's largest manufacturer of power mowers — is to provide the customer with complete local service and parts. This Toro has done through an extensive chain of service dealers, factory-trained to give you the most careful, competent care for your Toro work-saver.



19" WHIRLWIND

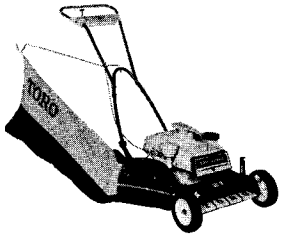

21" HAND PROPELLED WHIRLWIND

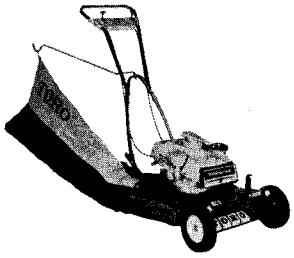

21" POW-R-DRIVE WHIRLWIND



21" HEVI-DUTY WHIRLWIND HAND PROPELLED



21" HEVI-DUTY WHIRLWIND SELF PROPELLED

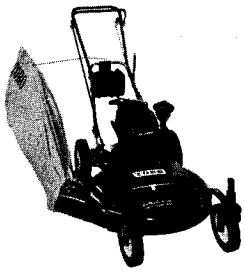

25" HEVI-DUTY WHIRLWIND

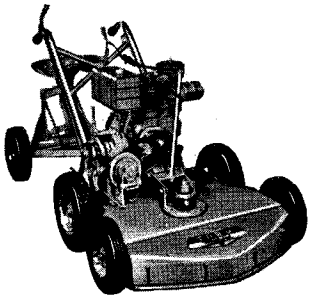

31" WHIRLWIND



34" HEVI-DUTY WHIRLWIND

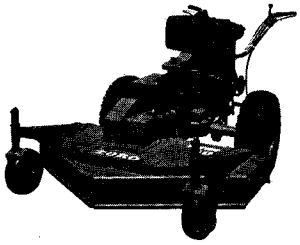

50" TROJAN

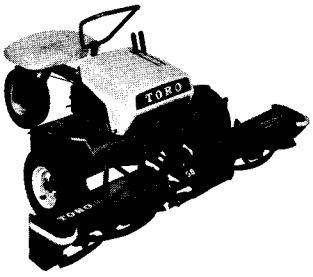

58" PROFESSIONAL

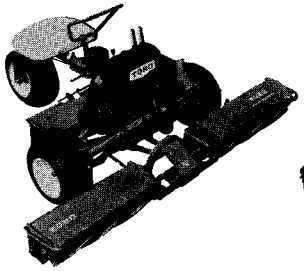

70" PROFESSIONAL

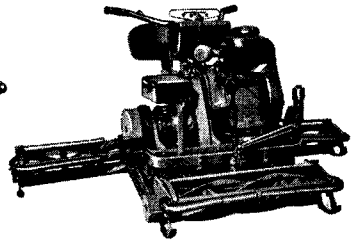

76" PROFESSIONAL

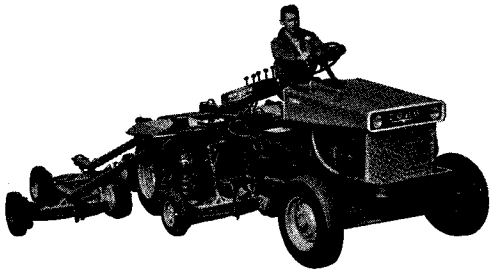

7 UNIT HYDRAULIC PARKMASTER



BIG RED

Reel Mower or Rotary Mower . . . Self Propelled or Riding Mower . . . Whatever your preference in Power Mowers, Toro makes a model to fit your needs. Choose from Toro's complete line of fine mowing equipment.

Toro has a mower that's just right for you. And Toro Mowers are the best you can buy!



21" SPORTLAWN

Form 139-67-A

TORO MANUFACTURING CORPORATION – Minneapolis, Minnesota 55420, U.S.A.

LITHO IN U. S. A.

TORO *Builds the right Power Mower for every need!*