Form No. 3369-656 Rev C

TORO®

Count on it.

Parts Catalog

Front Brush Kit

for 18in, 21in and 26in Cutting Reels

Model No. 115-7377

Model No. 115-7378

Model No. 115-7379

Model No. 120-9621

Model No. 120-9622

Model No. 120-9623

Model No. 139-4383

Model No. 139-5117

Model No. 139-5125

Model No. 139-7410

Model No. 139-7412

Register at www.Toro.com.
Original Instructions (EN)

CE

3369-656 C

Ordering Replacement Parts

To order replacement parts, please supply the part number, the quantity, and the description of each part desired.

Understanding Reference Numbers

Each identified part in an illustration has a reference number. The reference number for a part also appears in the parts list, along with other information about the part.

This catalog uses two special reference number formats, one to indicate parts in a service assembly and another to indicate the quantity of a given part in an illustration.

Service Assembly Reference Numbers

Parts in service assemblies have reference numbers in the form a:b. The a represents the reference number of the entire service assembly and the b represents a sequential number unique to each part within the service assembly.

For example, a wheel assembly might be identified by reference number 6, the tire by 6:1, the valve by 6:2, and the wheel by 6:3. When you order the assembly identified by reference number 6, you receive all parts identified by reference numbers 6:1,6:2, and 6:3. However, you may also order any part individually. Reference numbers of this type appear in illustration and in parts lists.

Reference Numbers Indicating Quantity

In an illustration, if a reference number indicates more than one part, the reference number has the form nX y. The n represents the quantity of the part, the X is the multiplication symbol, and the y represents the reference number.

For example, in an illustration, the reference number 2X 37 means that two of the parts identified by reference number 37 are indicated.

Contents

18 Inch Narrow Brush Scraper Assembly No. 120-9621 4
18 Inch Wide Brush Scraper Assembly No. 120-9622 5
18 Inch Full Brush Scraper Assembly No. 120-9623 6
18 Inch Interlaced Scraper Brush Assembly No. 139-7412 7
21 Inch Narrow Brush Scraper Assembly No. 115-7377 8
21 Inch Wide Brush Scraper Assembly No. 115-7378 9
21 Inch Full Brush Scraper Assembly No. 115-7379 10
21 Inch Interlaced Scraper Brush Assembly No. 139-4383 11
26 Inch Smooth Scraper Brush Assembly No. 139-5117 12
26 Inch Interlaced Scraper Brush Assembly No. 139-5125 13
26 Inch Wide Wiehle Roller Scraper Brush Assembly No. 139-7410 14

© 2019—The Toro® Company
8111 Lyndale Avenue South
Bloomington, MN 55420

Contact us at www.Toro.com.
Printed in the USA.
All Rights Reserved

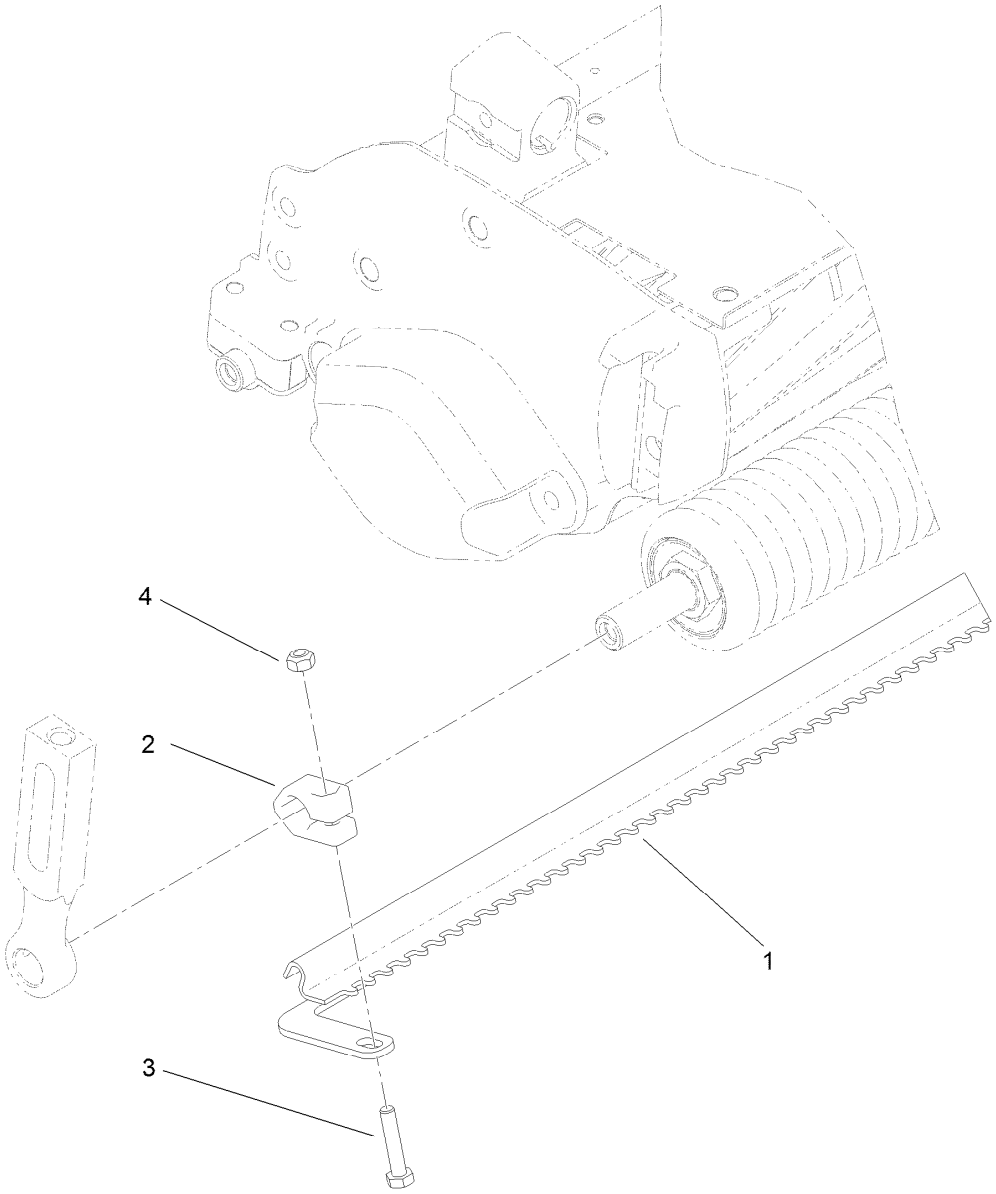

18 Inch Narrow Brush Scraper Assembly No. 120-9621

Ref.	*Part Number*	*Qty.*	*Description*
1	110-2365	1	Brush-Scraper, Narrow (18 Inch)
2	115-7364	2	Block-Clamp, Scraper
3	115-7372	2	Screw-HH
4	115-7373	2	Nut-Lock

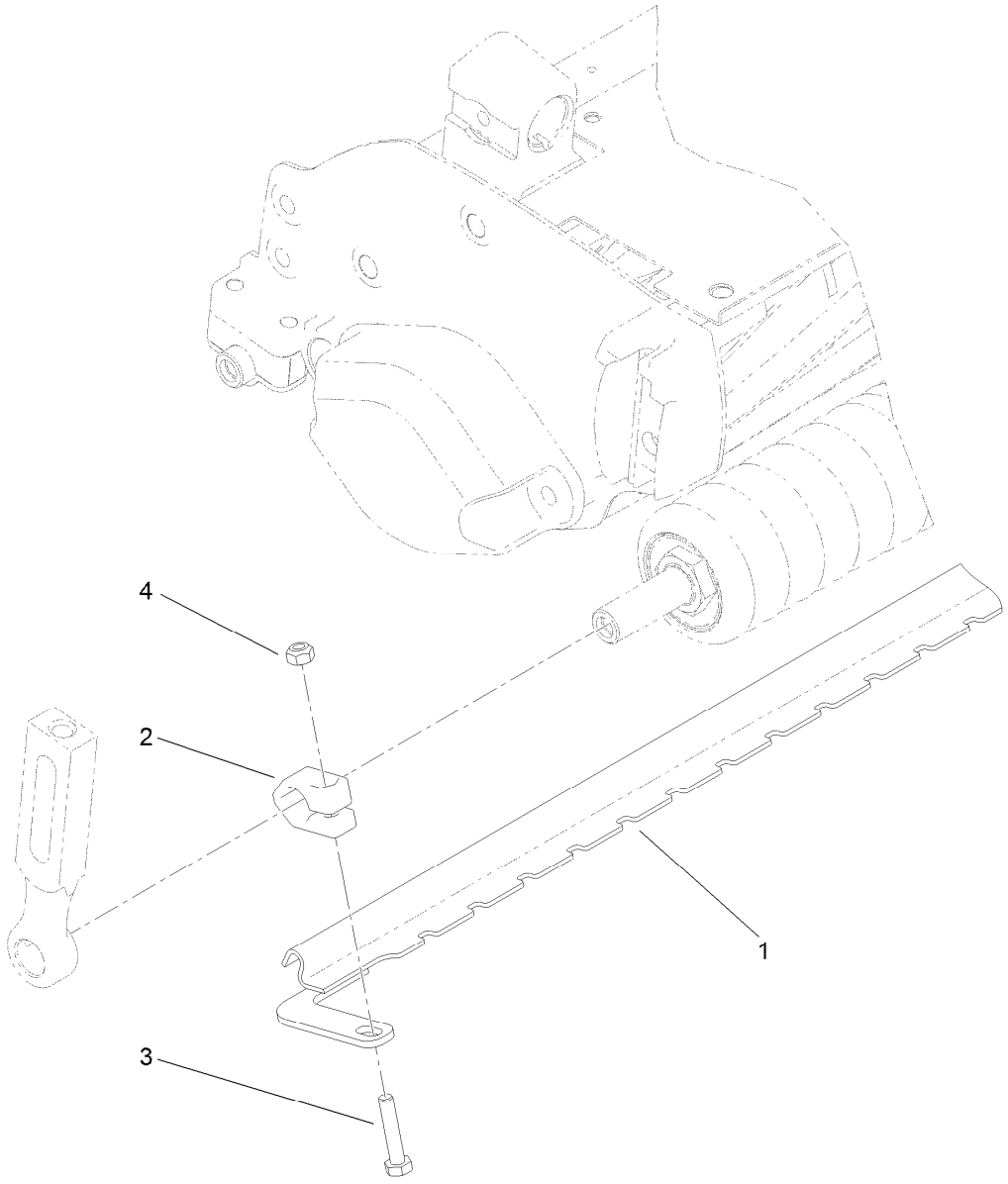

18 Inch Wide Brush Scraper Assembly No. 120-9622

Ref.	*Part Number*	*Qty.*	*Description*
1	110-2368	1	Brush-Scraper, Wide (18 Inch)
2	115-7364	2	Block-Clamp, Scraper
3	115-7372	2	Screw-HH
4	115-7373	2	Nut-Lock

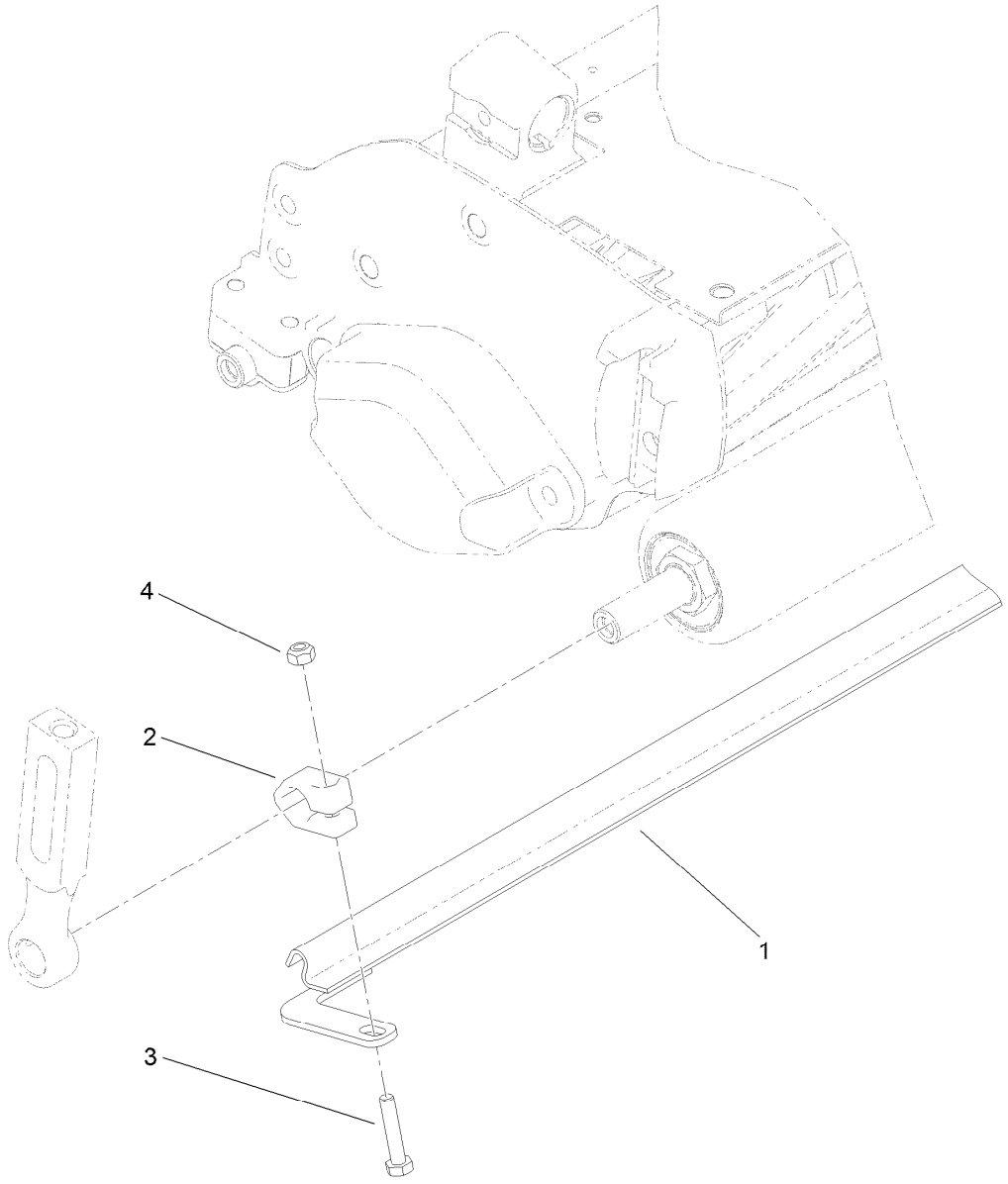

18 Inch Full Brush Scraper Assembly No. 120-9623

Ref.	*Part Number*	*Qty.*	*Description*
1	110-2371	1	Brush-Scraper, Full (18 Inch)
2	115-7364	2	Block-Clamp, Scraper
3	115-7372	2	Screw-HH
4	115-7373	2	Nut-Lock

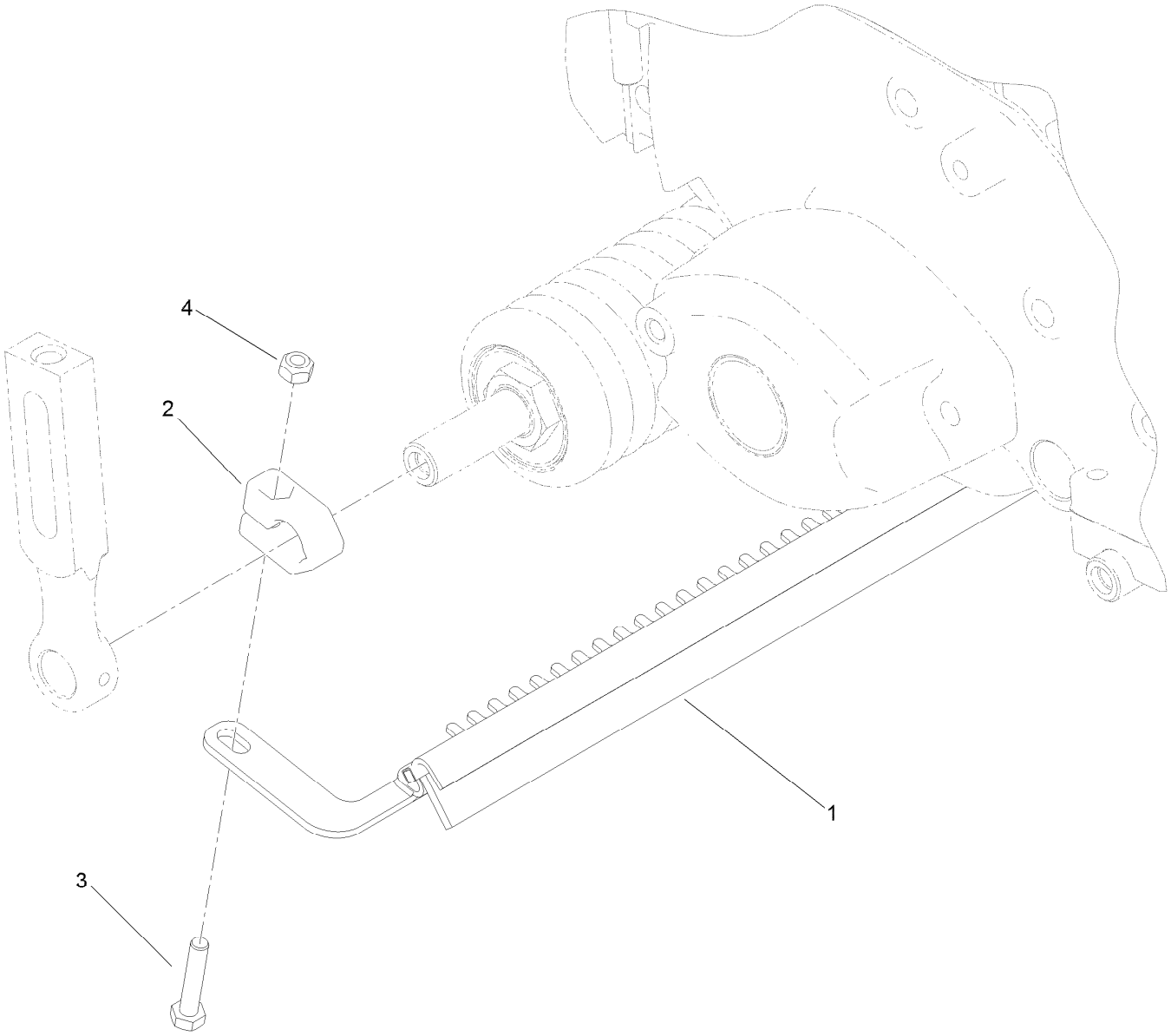

18 Inch Interlaced Scraper Brush Assembly No. 139-7412

Ref.	*Part Number*	*Qty.*	*Description*
1	139-5120	1	Brush-Scraper, Interlaced (18 Inch)
2	115-7364	2	Block-Clamp, Scraper
3	115-7372	2	Screw-HH
4	115-7373	2	Nut-Lock

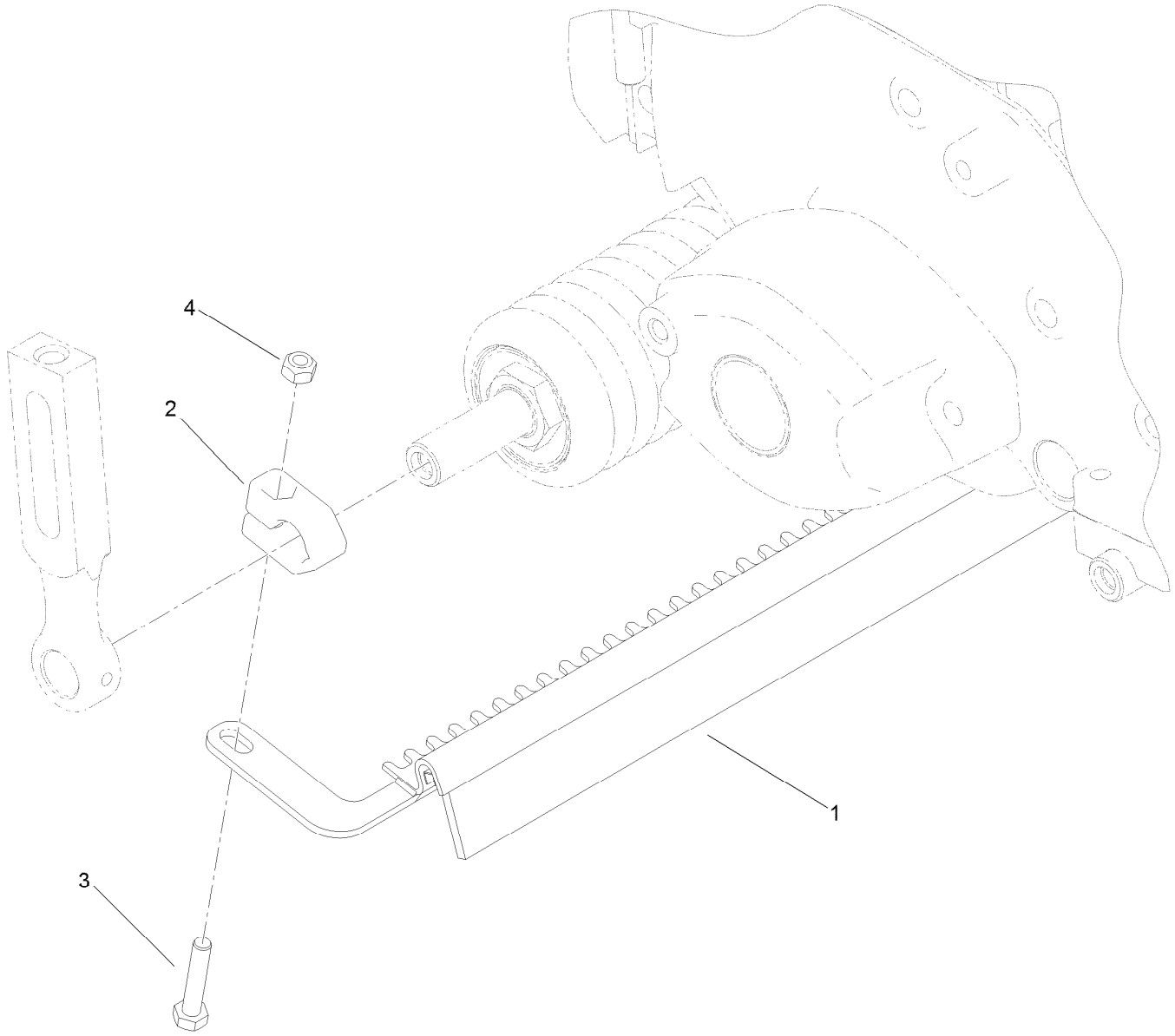

21 Inch Narrow Brush Scraper Assembly No. 115-7377

Ref.	*Part Number*	*Qty.*	*Description*
1	121-5896	1	Brush-Scraper, Narrow (21 Inch)
2	115-7364	2	Block-Clamp, Scraper
3	115-7372	2	Screw-HH
4	115-7373	2	Nut-Lock

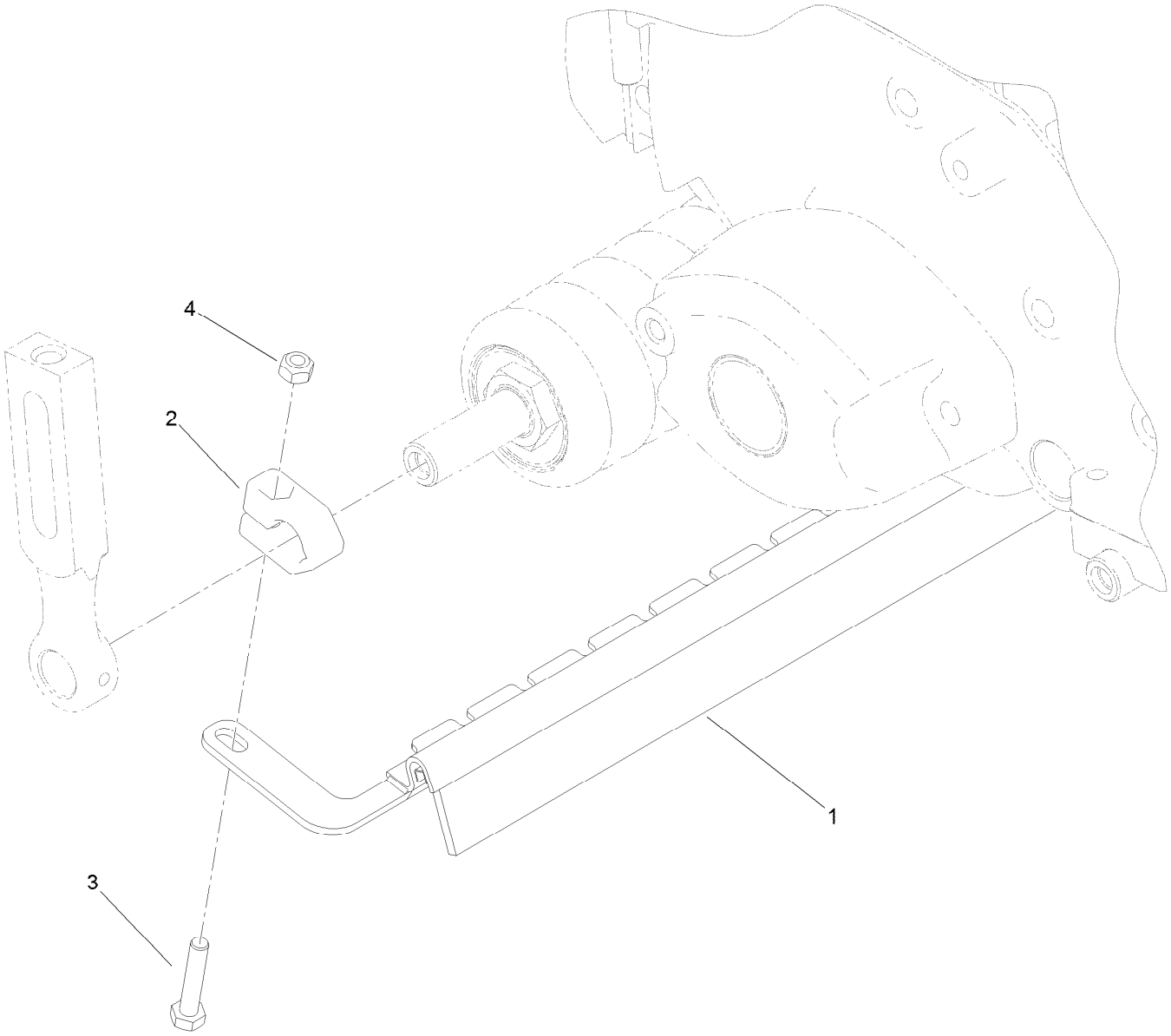

21 Inch Wide Brush Scraper Assembly No. 115-7378

Ref.	*Part Number*	*Qty.*	*Description*
1	121-5895	1	Brush-Scraper, Wide (21 Inch)
2	115-7364	2	Block-Clamp, Scraper
3	115-7372	2	Screw-HH
4	115-7373	2	Nut-Lock

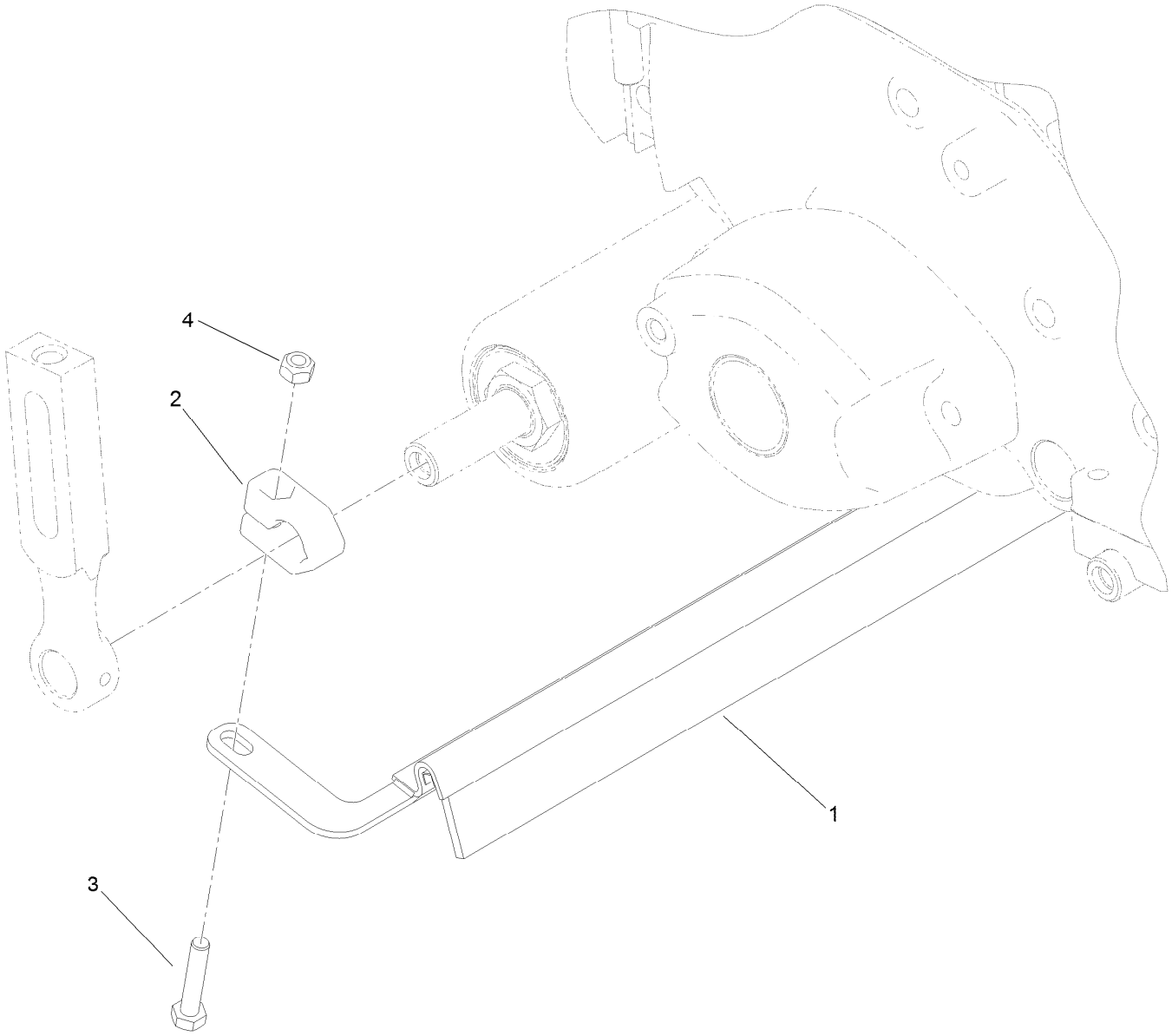

21 Inch Full Brush Scraper Assembly No. 115-7379

Ref.	*Part Number*	*Qty.*	*Description*
1	121-5897	1	Brush-Scraper, Full (21 Inch)
2	115-7364	2	Block-Clamp, Scraper
3	115-7372	2	Screw-HH
4	115-7373	2	Nut-Lock

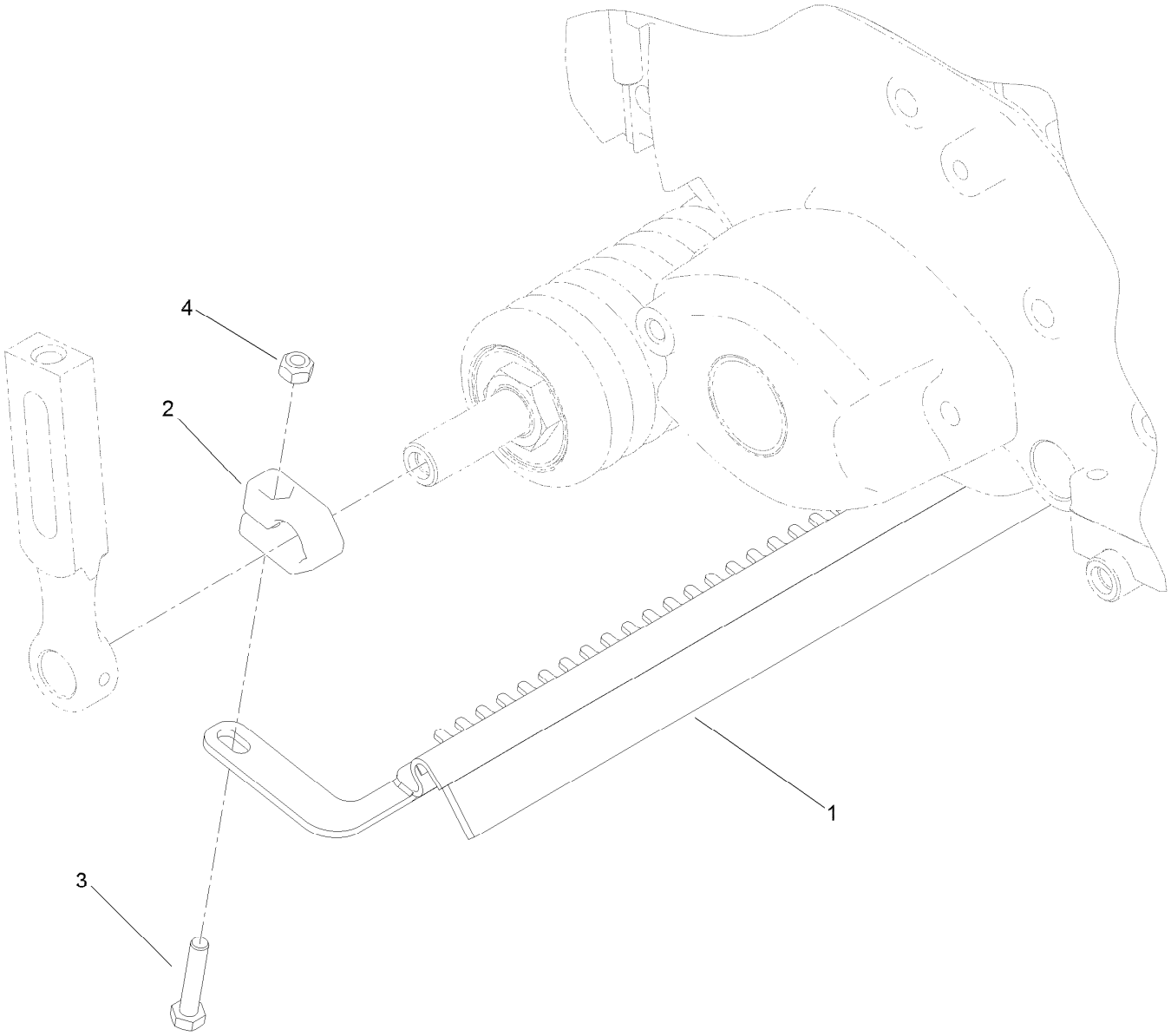

21 Inch Interlaced Scraper Brush Assembly No. 139-4383

Ref.	*Part Number*	*Qty.*	*Description*
1	139-4382	1	Brush-Scraper, Interlaced (21 Inch)
2	115-7364	2	Block-Clamp, Scraper
3	115-7372	2	Screw-HH
4	115-7373	2	Nut-Lock

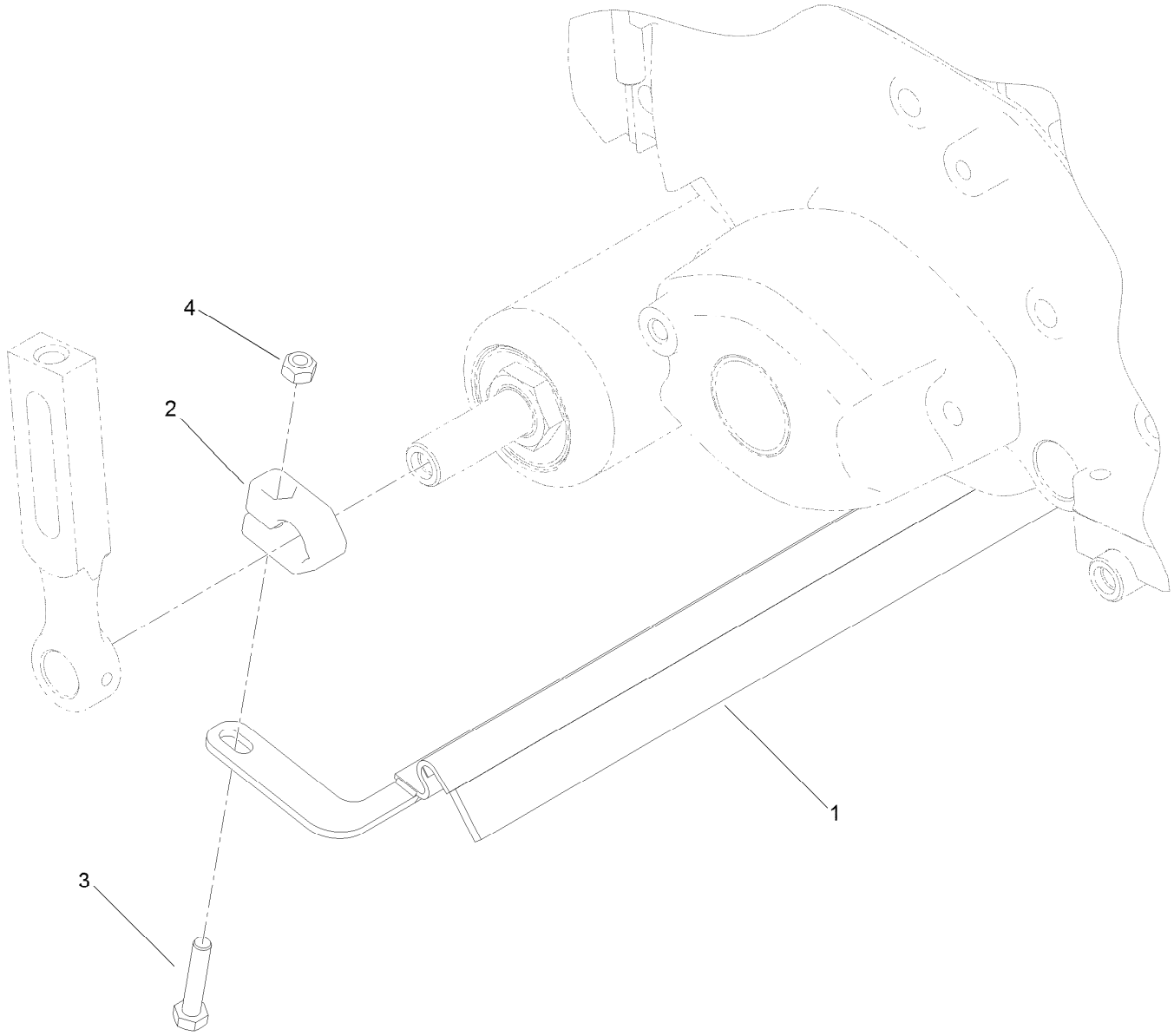

26 Inch Smooth Scraper Brush Assembly No. 139-5117

Ref.	*Part Number*	*Qty.*	*Description*
1	139-5116	1	Brush-Scraper, Smooth (26 Inch)
2	115-7364	2	Block-Clamp, Scraper
3	115-7372	2	Screw-HH
4	115-7373	2	Nut-Lock

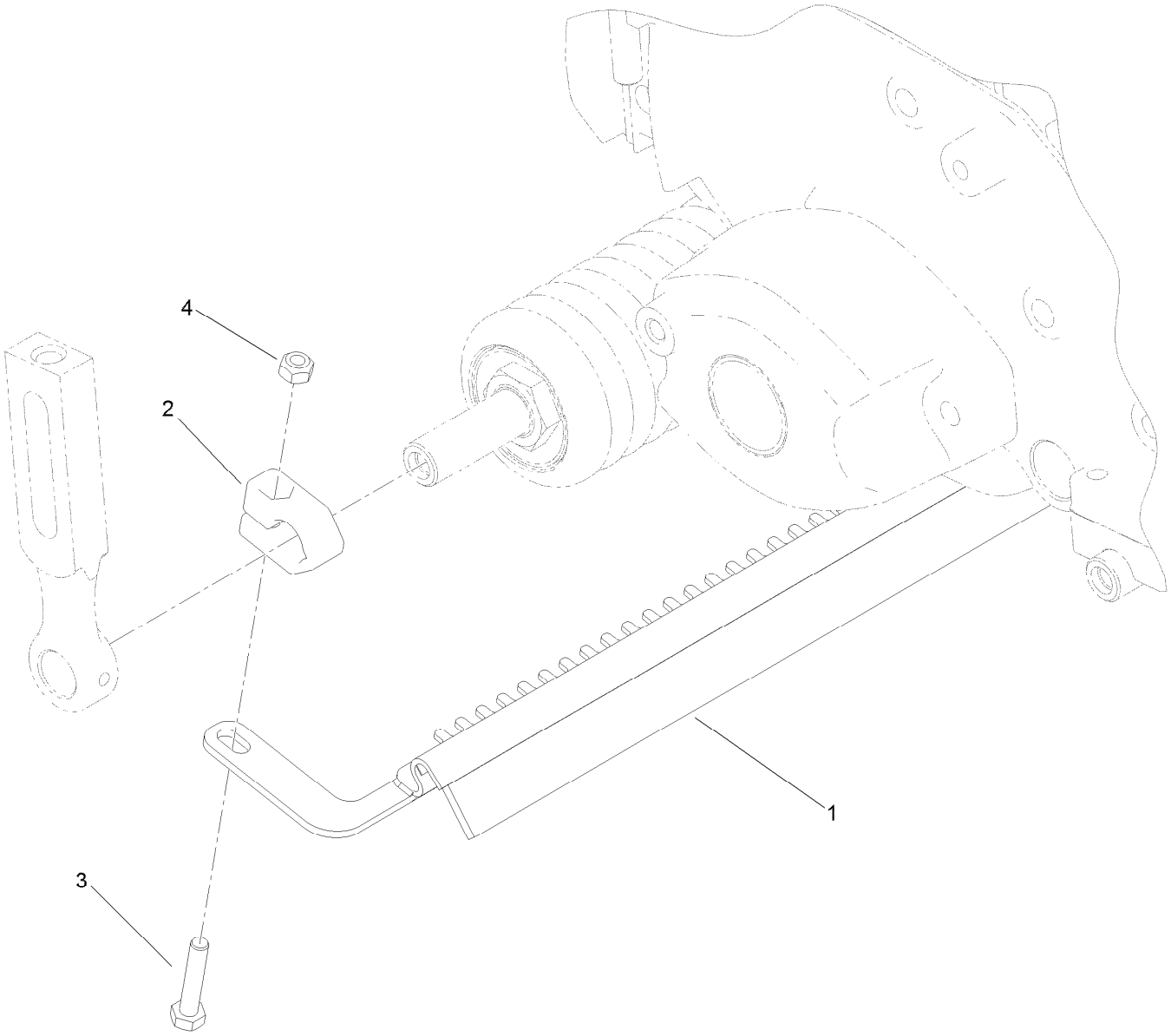

26 Inch Interlaced Scraper Brush Assembly No. 139-5125

Ref.	*Part Number*	*Qty.*	*Description*
1	139-5124	1	Brush-Scraper, Interlaced (26 Inch)
2	115-7364	2	Block-Clamp, Scraper
3	115-7372	2	Screw-HH
4	115-7373	2	Nut-Lock

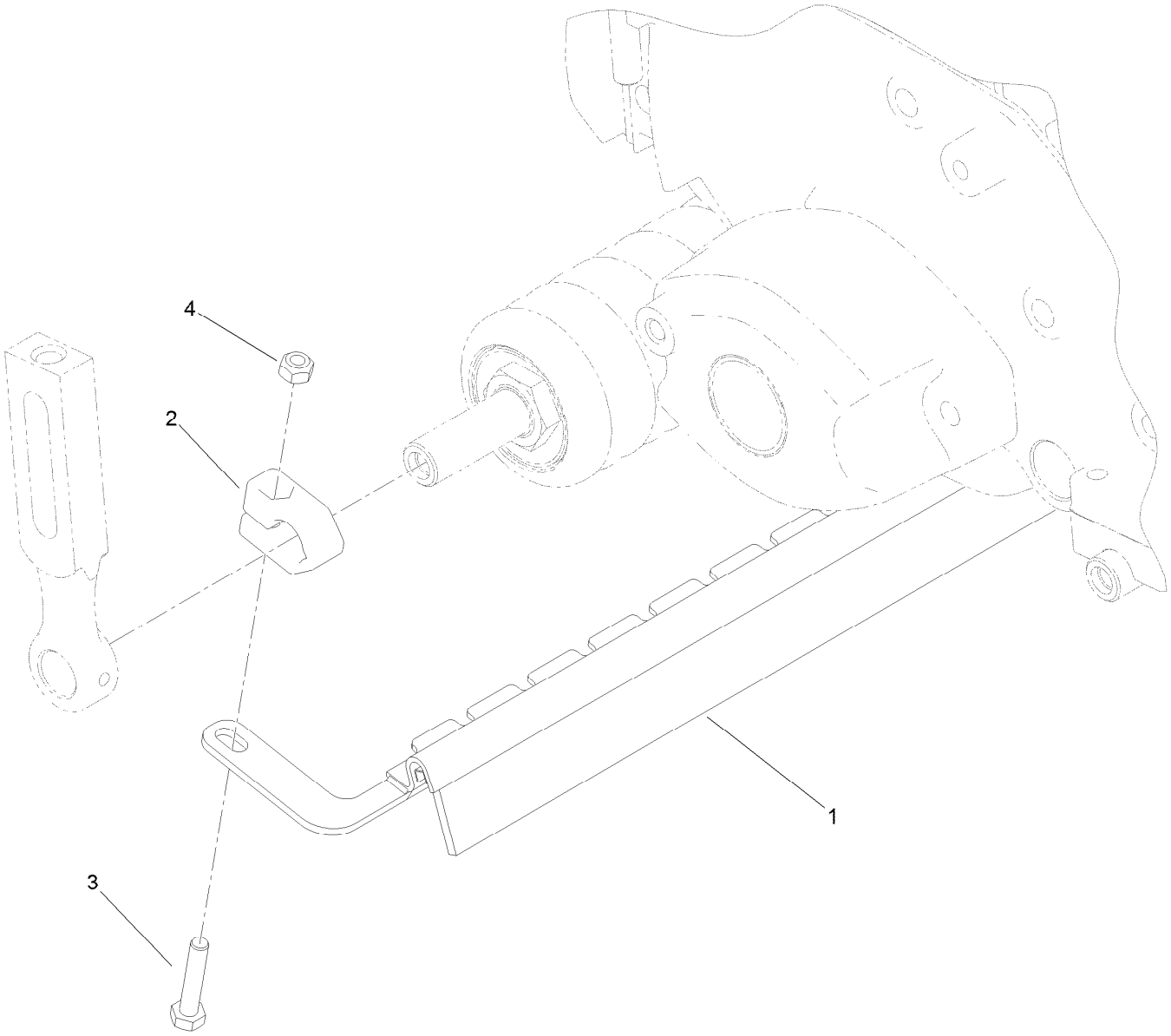

26 Inch Wide Wiehle Roller Scraper Brush Assembly No. 139-7410

Ref.	*Part Number*	*Qty.*	*Description*
1	139-7409	1	Brush-Scraper, Wide (Wiehle, 26In)
2	115-7364	2	Block-Clamp, Scraper
3	115-7372	2	Screw-HH
4	115-7373	2	Nut-Lock

Notes:



Count on it.