FORM NO. 3323–172

TORO®

MODEL NO. 30553–200000001 & UP
MODEL NO. 30553TE–200000001 & UP

PARTS CATALOG

72" SIDE DISCHARGE CUTTING UNIT
For Groundsmaster® 200 Series

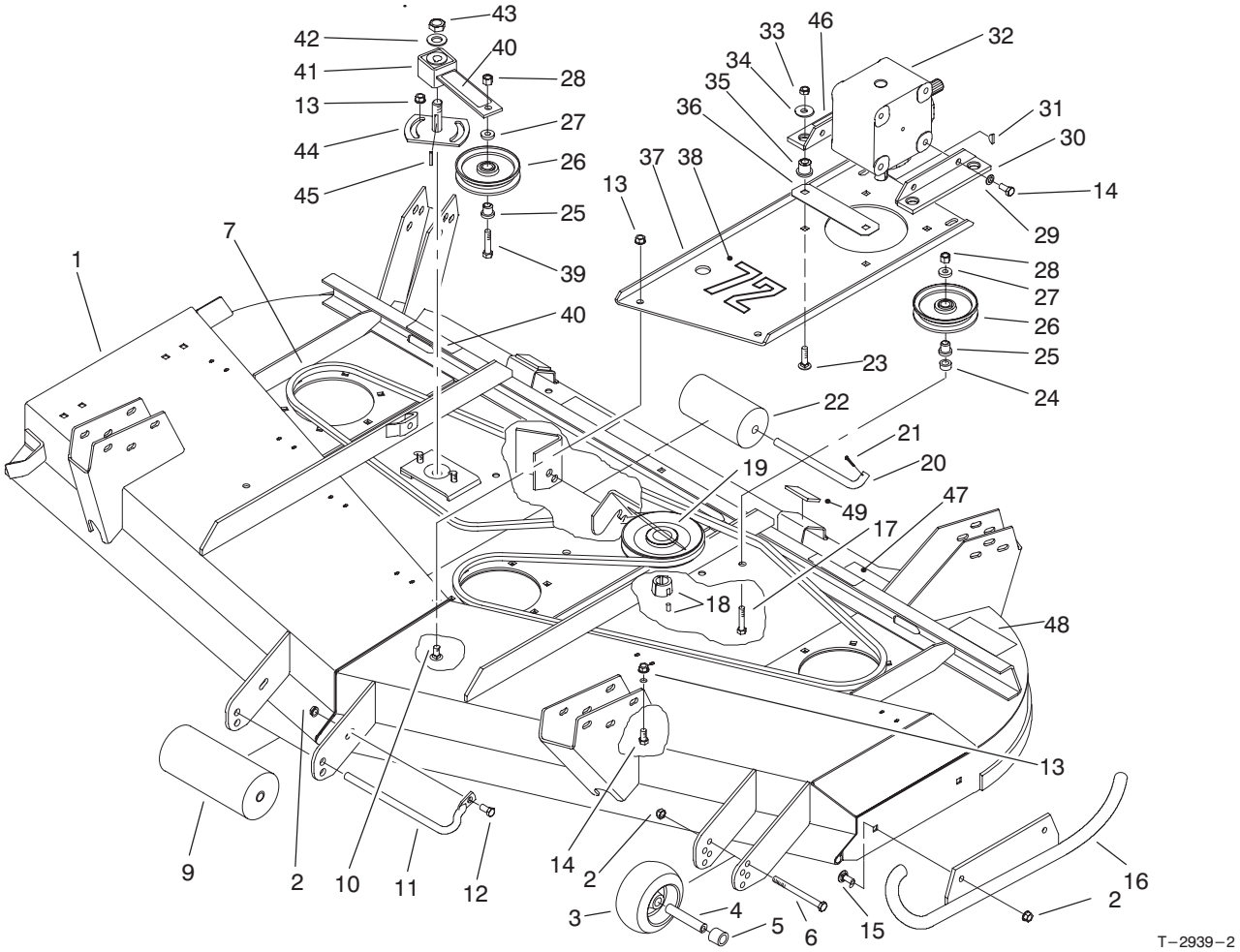

DECK ASSEMBLY

Ref. No.	Part No.	Description	No. Used
1	99–1278	Asm–Deck (Incl. Ref. #40, 47, 48 & on page 4, #4, 12, 17 & 18)	1
1	99–8406	Asm–Deck (Europe) (Incl. Ref. #40, 47, 48 & on page 4, #4, 12, 17 & 18)	1
2	32128–19	Nut–HFH	4
3	68–2730	Wheel–Gage	1
4	98–7912	Spanner	1
5	98–7913	Spacer	1
6	323–23	Screw–HH	1
7	57–0240	V–Belt	1
9	68–6710	Roller–Deck	1
10	3231–27	Bolt–CARR	4
11	68–6840	Shaft–Roller	1
12	3234–11	Screw–HHF	1
13	3290–357	Nut–HHF	8

Ref. No.	Part No.	Description	No. Used
14	323–4	Screw–HH	6
15	3231–22	Bolt–CARR	2
16	98–7923	Skid	1
17	3211–9	Screw–HH	1
18	27–6140	Bushing–Taperlock	1
19	63–9900	Pulley–Gearbox	1
20	40–0340	Shaft–Roller, Rear	2
21	3272–11	Pin–Cotter	3
22	36–1740	Roller–Deck	2
23	3231–26	Bolt–CARR	4
24	44–6390	Spacer	1
25	65–5950	Bushing–Pulley	2
26	65–5940	Pulley–Idler	2
27	7–0081	Washer–Special	2
28	3296–5	Nut–Lock	2
29	3253–21	Washer–Lock	4
30	68–8560	Bracket–Gear Box	2

© The TORO Company – 2000
All Rights Reserved

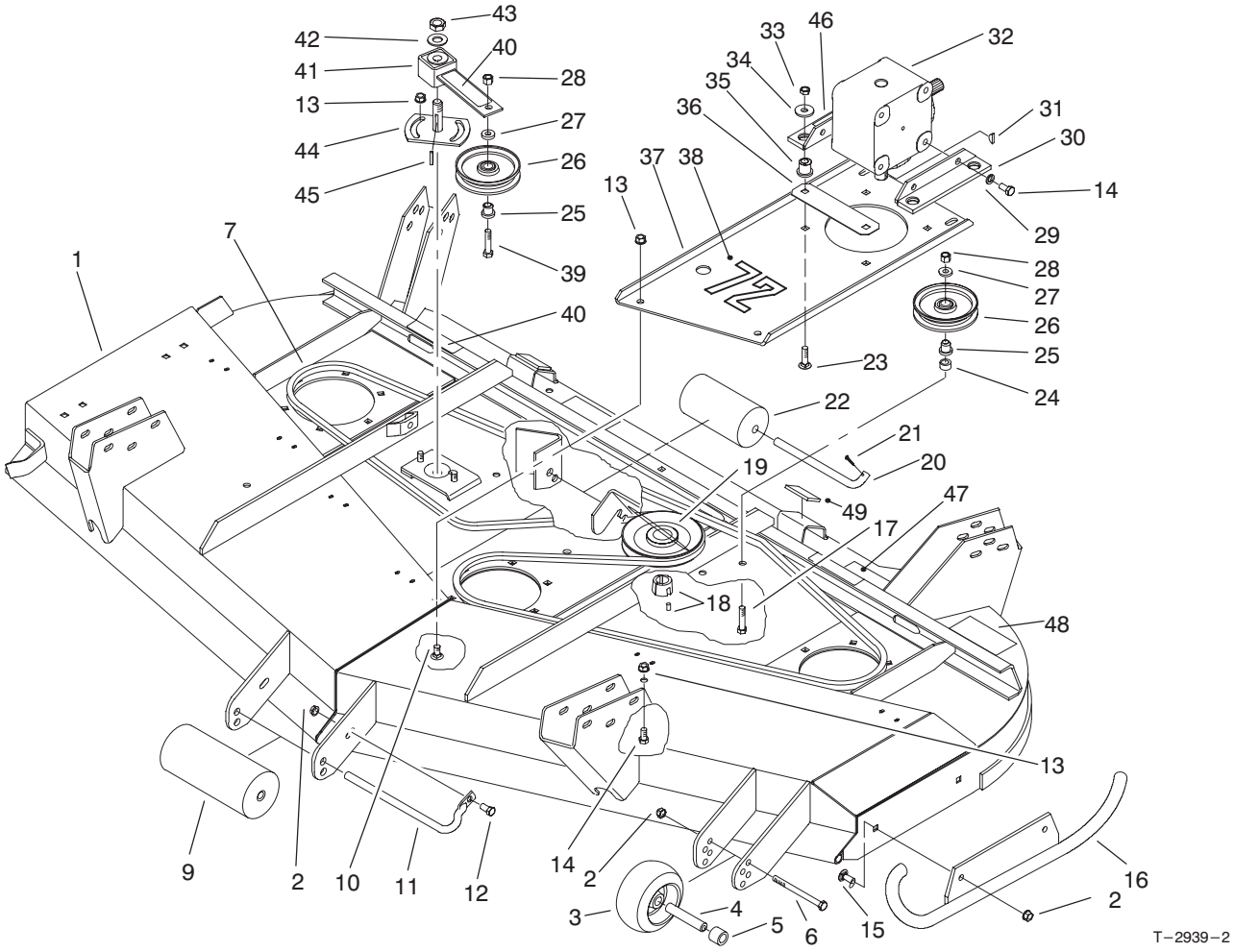

DECK ASSEMBLY (Continued)

Ref. No.	Part No.	Description	No. Used
31	3257–5	Key–Woodruff	1
32	68–6810	Gear Box	1
33	32153–2	Nut–Lock	4
34	63–8410	Washer–Flat	4
35	63–9750	Mount–Rubber	4
36	68–9890	Cover–Gear Box, Front	1
37	68–8530	Base–Gear Box	1
38	57–0280	Decal–72”	1
39	3211–8	Screw–HH	1
40	100–6578	Decal–Danger	3
41	100–6178	Asm–Socket, Idler (Incl. Ref. #40)	1

Ref. No.	Part No.	Description	No. Used
42	3256–27	Washer–Flat	1
43	3296–33	Nut–Lock	1
44	44–6300	Plate–Idler	1
45	5–1077	Key–Square	1
46	70–2560	Decal–Lube	1
46	93–6697	Decal–Lube (Europe)	1
47	68–8340	Decal–Torque	1
47	93–7818	Decal–Torque (Europe)	1
48	92–8778	Decal–Warning	1
48	99–8401	Decal–Warning (Europe)	1
49	74–0340	Cushion–Rubber	2

*Not Illustrated

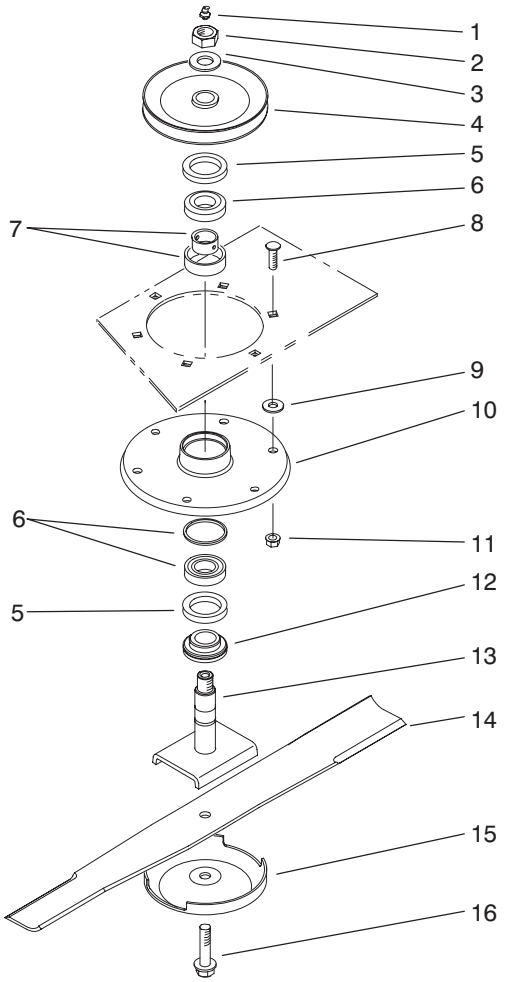

T−2940−2

SPINDLE ASSEMBLY

Ref. No.	Part No.	Description	No. Used
1	302−2	Fitting−Grease	3
2	32146−20	Nut−Lock	3
3	7−4150	Washer	3
4	57−0560	Asm−Pulley & Hub	3
5	253−139	Seal−Oil	6
6	27−0960	Asm−Bearing	3
7	27−5970	Spacer−Matched Set	3
8	3231−22	Bolt−CARR	18
9	3256−24	Washer−Flat	AR
10	61−4160	Spindle	3

Ref. No.	Part No.	Description	No. Used
11	32128−21	Nut−Lock HFH	18
12	27−0950	Spacer−Bearing, Spindle	3
13	27−0920	Shaft−Spindle	3
14	94−1861	Blade	3
15	72−9361	Cup−Anti Scalp	3
16	92−5816	Screw−Blade	3
*	95−3080	Spindle Kit Assembly (Incl. Ref. # 8, 9, 11, 15, 16)	1
*	57−0260−03	Spindle Assembly (Incl. Ref. #1−5, 10, 12−13)	1

*Not Illustrated

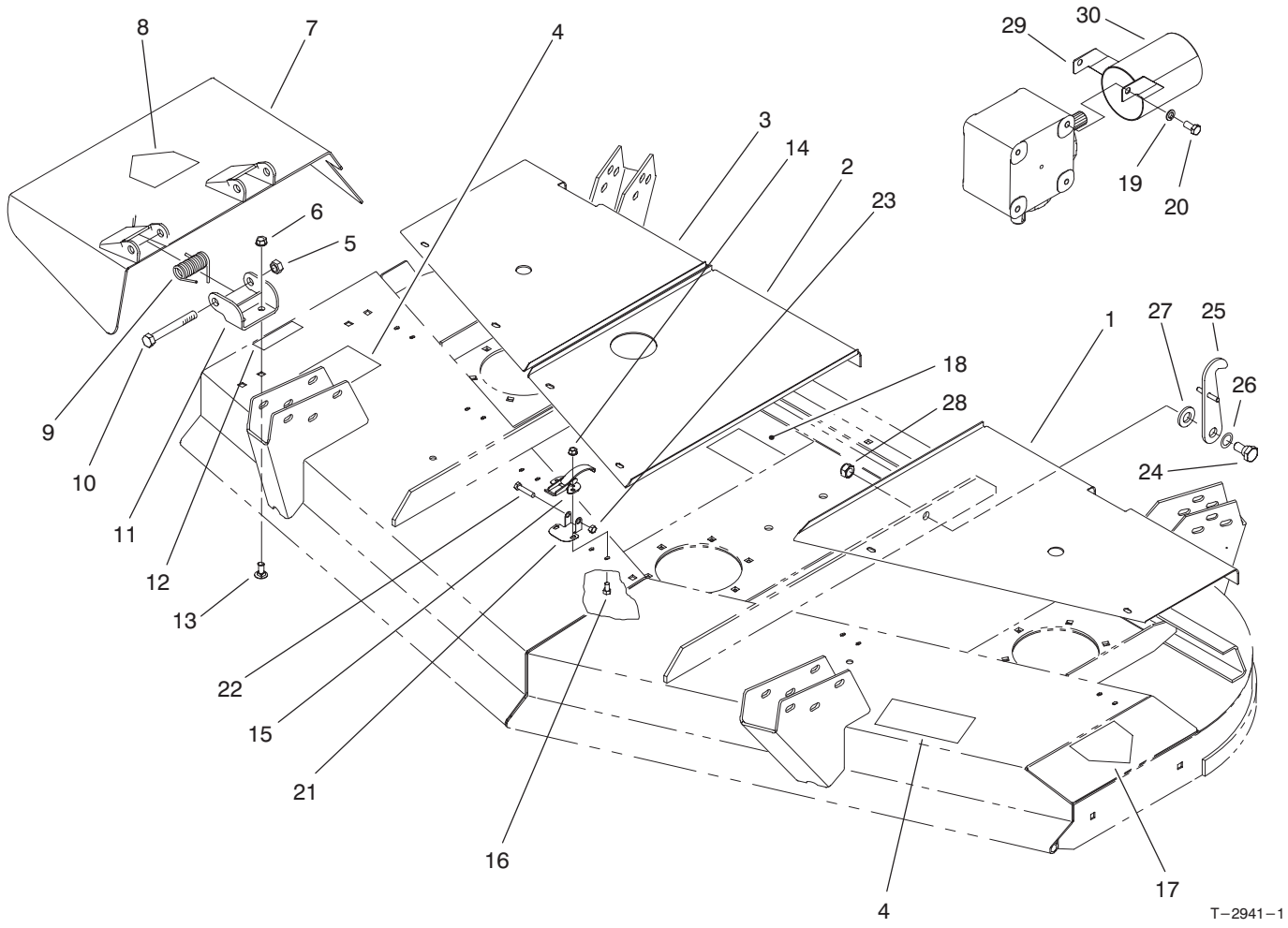

COVERS & DEFLECTOR ASSEMBLY

Ref. No.	Part No.	Description	No. Used
1	98−7930	Cover−Belt LH	1
2	57−0210	Cover−Center	1
3	98−7928	Cover−Belt RH	1
4	66−1340	Decal−Danger	2
4	93−7824	Decal−Danger (Europe)	2
5	32153−5	Nut−Lock	2
6	3290−357	Nut−HFH	4
7	100−6181	Asm−Deflector (Incl. Ref. #8)	1
8	100−6582	Decal−Danger	1
9	51−1550	Spring	2
10	325−17	Screw−HH	2
11	51−1530	Bracket−Hinge	2
12	66−6380	Decal−Danger	1
12	93−7828	Decal−Danger (Europe)	1
13	3231−27	Bolt−CARR	4
14	32128−17	Nut−HFH	12

Ref. No.	Part No.	Description	No. Used
15	249−21	Latch−Draw	6
16	3290−321	Screw−Hex Slotted Hd.	12
17	43−8480	Decal−Danger	1
17	93−7815	Decal−Danger (Europe)	1
18	99−5172	Decal−Belt Routing	1
19	3253−21	Washer−Lock	2
20	323−2	Screw−HH	2
21	93−7043	Retainer	3
22	321−8	Screw−HH	3
23	3296−56	Nut−Lock	3
24	62−6080	Bolt−Shoulder	2
25	99−5188	Asm−Retainer, Deck	2
26	3290−317	Washer−Wave	2
27	3256−27	Washer−Flat	2
28	3296−28	Nut−Lock	2
29	99−8408	PTO Guard	1
30	93−7283	Decal−Danger	1

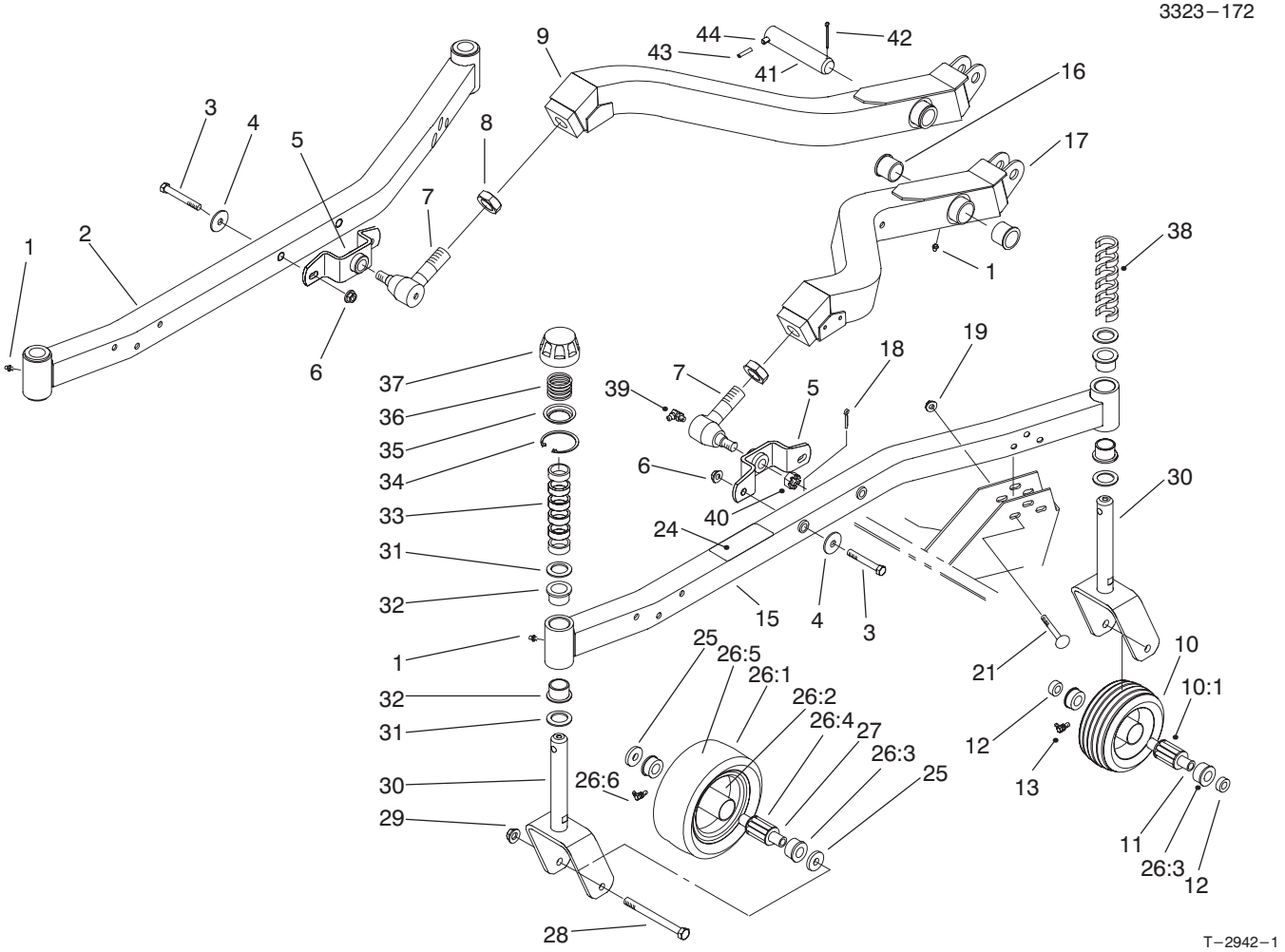

CARRIER FRAME ASSEMBLY

Ref. No.	Part No.	Description	No. Used
1	302−5	Fitting−Grease	6
2	98−7934	Arm−Castor RH (Incl. Ref. #1 & 32)	1
3	324−12	Screw−HH	4
4	66−6480	Washer	4
5	98−7944	Mount−Ball Joint	2
6	32128−42	Nut−HFH	4
7	86−8100	Ball Joint (Incl. Ref. #39 & 40)	2
8	21−3000	Nut−Jam	2
9	98−7900	Arm−Lift, RH (Incl. Ref. #1 & 16)	1
10	63−8400	Wheel−Castor (Incl. Ref #10:1, 13 & 26:3)	2
10:1	63−8580	Bearing−Roller	2
11	63−1770	Bushing−Spanner	2
12	99−1291	Spacer	4
13		Fitting−Grease	2
15	98−7933	Arm−Castor LH (Incl. Ref. #1, 24 & 32)	1
16	256−268	Bushing−Flange	4
17	98−7903	Arm−Lift LH (Incl. Ref.#1& 16)	1
18	3272−12	Pin−Cotter	2
19	32128−19	Nut−HFH	12
21	3231−10	Bolt−CARR	12
24	92−3035	Decal−Low Height−Of−Cut	1
25	70−8040	Washer−Flat	4

Ref. No.	Part No.	Description	No. Used
26	99−1268	Asm−Wheel & Tire	2
26:1	93−9939	Tire 8”	1
26:2		Asm−Rim	1
26:3	62−5580	Bearing−Outside	2
26:4	62−5570	Bearing−Roller	1
26:5	68−8950	Tube−W/Valve	1
26:6	302−11	Fitting−Grease	1
27	68−8980	Bushing−Spanner	2
28	325−19	Screw−HH	4
29	32128−23	Nut−HFH	4
30	98−7921	Asm−Fork, Castor	4
31	3−6781	Washer−Thrust	8
32	94−1291	Bushing−Special	8
33	63−0070	Spacer	12
34	92−5581	Ring−Retaining, Internal	4
35	92−5583	Washer−Cap	4
36	92−5584	Spring−Compression	4
37	92−8861	Cap−Height−Of−Cut	4
38	99−1283	Spacer	12
39	302−5	Fitting−Grease 90°	2
40	32136−2	Nut−Hex. Slotted	2
41	98−2330	Asm−Pivot Pin (Incl. Ref. #43 & 44)	2
42	3272−19	Pin−Cotter	2
43	32121−61	Pin−Roll	1
44	32121−67	Pin−Roll	1
*	92−8862	HOC Cap ASM (Incl. 34−37)	4

*Not Illustrated

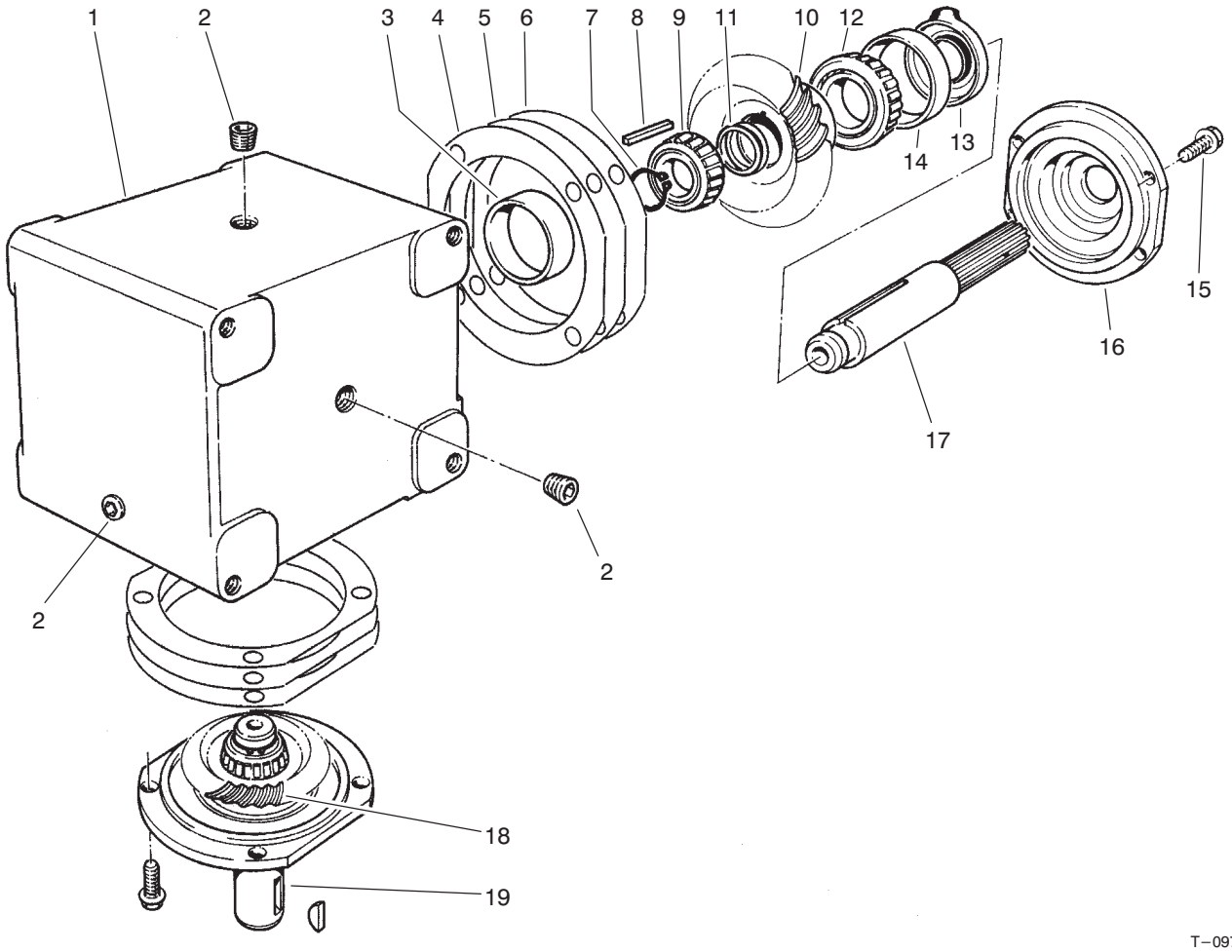

T−0977−2

GEAR BOX ASSEMBLY NO. 68−6810

Ref. No.	Part No.	Description	No. Used
1	68−7030	Housing	1
2	62−3490	Plug−Pipe (Solid)	4
3	62−3360	Cup−Bearing	2
4	62−3420	Gasket (.015 in.)	A/R
5	62−3430	Gasket (.005 in.)	A/R
6	62−3440	Gasket (.003 in.)	A/R
7	68−7070	Ring−Retaining	2
8	62−3380	Key	2
9	62−3370	Cone−Bearing	2
10	68−7080	Gear	1

Ref. No.	Part No.	Description	No. Used
11	72−9370	Shim (.020 in.)	4
12	62−3330	Cone−Gear	1
13	62−3400	Seal	2
14	62−3340	Cup−Bearing	2
15	62−3310	Screw−Cap	8
16	62−3410	Cap	2
17	68−7040	Shaft	1
18	68−7060	Gear	1
19	68−7050	Shaft	1

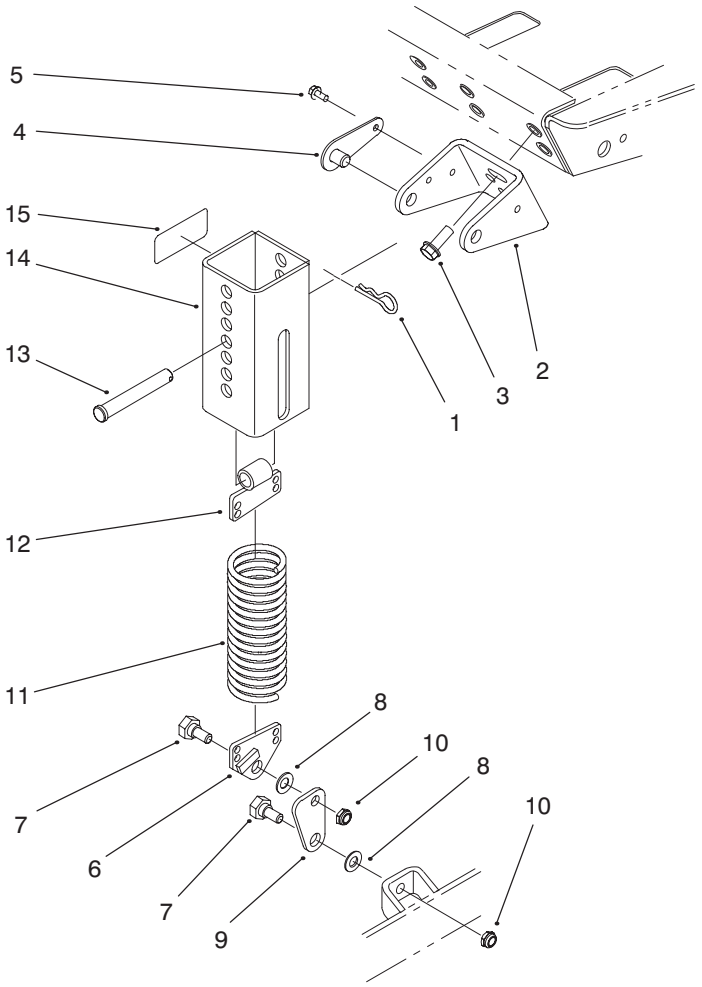

T−2486−4

COUNTERBALANCE ASSEMBLY

Ref. No.	Part No.	Description	No. Used
1	3290−355	Pin−Hair, Cotter	2
2	66−8230	Bracket−Support	2
3	3234−11	Screw−HFH	4
4	70−7920	Asm−Pin, Lock	4
5	12−3270	Screw−Self Tapping	4
6	66−8420	End−Spring	2
7	46−3380	Bolt−Shoulder	4
8	3256−24	Washer−Flat	4

Ref. No.	Part No.	Description	No. Used
9	66−8440	Link−Knee	2
10	3296−44	Nut−Lock	4
11	66−8390	Spring−Extension	2
12	70−7940	End−Spring	2
13	283−69	Pin−Clevis	2
14	99−1298	Asm−Spring Cover (Incl. Ref. #15)	2
15	100−6179	Decal−Warning	1

PRODUCT CHANGES

In an effort to make improvements available to TORO owners as quickly as possible, minor changes are incorporated into Toro's products from time to time that do not become immediately shown in the Parts Catalog. If such a change has been made in your unit, which is not reflected in your manual, see your TORO Distributor or his Authorized TORO Service Dealer for information and part numbers.

COUNTRIES OTHER THAN THE UNITED STATES OR CANADA

Customers who have purchased TORO products exported from the United States or Canada should contact their Toro Distributor (Dealer) to obtain guarantee policies for your country, province or state. If for any reason you are dissatisfied with your Distributor's service or have difficulty obtaining guarantee information, contact the TORO importer. If all other remedies fail, you may contact us at The Toro Company.

MAINTENANCE RECORD

Date								

Compliance with Radio Interference Regulations Certified.
Certifie Conforme au Reglement sur le Brouillage Radioelectrique.

Litho in U.S.A.