FORM NO. 3321–822 Rev B

# Cordless, Electric Hedge Trimmer

**51595, 51596, and 51597 – 9900001 and Up**

# Operator’s Manual

Para obtener una versión gratis de este manual en español, escriba a la dirección indicada más abajo. Asegúrese de indicar el modelo y el número de serie de su producto.

The Toro Company, Attn: Parts Dept., 8111 Lyndale Ave S, Bloomington, MN 55420–1196.

# Contents


| | Page |
|---|---|
| Introduction | 2 |
| Safety | 3 |
| Read All Instructions | 3 |
| Save These Instructions | 4 |
| Safety and Instruction Decals | 5 |
| Installation | 5 |
| Mounting the Charger (Model 51596 Only) | 5 |
| Mounting the Charger (Model 51597 Only) | 5 |
| Operation | 6 |
| Features | 6 |
| Charging the Battery | 7 |
| Preparing For Operation | 9 |
| Trimming A Hedge | 9 |
| Trimming Techniques | 10 |
| Maintenance | 11 |
| Recommended Maintenance Schedule | 11 |
| Cleaning the Trimmer | 11 |
| Blade Lubrication | 11 |
| Lubrication | 11 |
| Blade Replacement | 11 |
| Replacing the battery | 13 |
| Maintenance and Storage Tips | 13 |
| Screw Location Template for Model 51596 | 15 |
| Warranty | Back Cover |


# Introduction

Thank you for purchasing a Toro product.

All of us at Toro want you to be completely satisfied with your new product, so feel free to contact your local Authorized Service Dealer for help with service, genuine Toro parts, or other information you may require.

Whenever you contact your Authorized Service Dealer or the factory, always know the model and serial numbers of your product. These numbers will help the Service Dealer or Service Representative provide exact information about your specific product. You will find the model and serial number decal located in a unique place on the product as shown below.

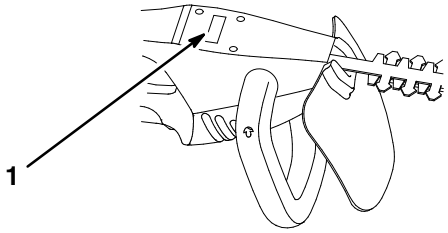


1. Model and Serial Number Decal

For your convenience, write the product model and serial numbers in the space below.

**Model No:** _____

**Serial No.** _____

Read this manual carefully to learn how to operate and maintain your product correctly. Reading this manual will help you and others avoid personal injury and damage to the product. Although Toro designs, produces, and markets safe, state-of-the-art products, you are responsible for using the product properly and safely. You are also responsible for training persons who you allow to use the product about safe operation.

The warning system in this manual identifies potential hazards and has special safety messages that help you and others avoid personal injury, even death. DANGER, WARNING and CAUTION are signal words used to identify the level of hazard. However, regardless of the hazard, be extremely careful.

**DANGER** signals an extreme hazard that will cause serious injury or death if the recommended precautions are not followed.

**WARNING** signals a hazard that may cause serious injury or death if the recommended precautions are not followed.

**CAUTION** signals a hazard that may cause minor or moderate injury if the recommended precautions are not followed.

Two other words are also used to highlight information. “Important” calls attention to special mechanical information and “Note” emphasizes general information worthy of special attention.

©The Toro Company – 1998
All Rights Reserved



Printed in USA

# Safety

**WARNING:** Always follow these basic safety precautions when using electric hedge trimmers to reduce the risk of fire, electric shock, and personal injury.

## Read All Instructions

**WARNING**

**POTENTIAL HAZARD**
- **To guard against injury, basic safety precautions should be observed.**

**WHAT CAN HAPPEN**
- **If safety precautions are not followed, serious personal injury could occur.**

**HOW TO AVOID THE HAZARD**
- **Read thoroughly and understand completely the following rules for safe operation and all instructions.**

### Before Operating

- **KNOW YOUR HEDGE TRIMMER – READ AND FOLLOW ALL INSTRUCTIONS.** Read owner's manual carefully. Learn its applications and limitations as well as the specific potential hazards related to this tool.

### While Operating

**DANGER**

**POTENTIAL HAZARD**
- **Blades are sharp.**

**WHAT CAN HAPPEN**
- **Contact with blades can cause serious personal injury.**

**HOW TO AVOID THE HAZARD**
- **Keep hands away from blades.**
- **Keep both hands on handles during operation.**
- **Do not remove cut material or hold material to be cut when blades are moving.**
- **Ensure that the trimmer switch is off when clearing jammed material from blades.**
- **Do not grasp the exposed cutting blades or cutting edges of trimmer.**

**WARNING**

**POTENTIAL HAZARD**
- **Use of trimmer can cause electric shock.**

**WHAT CAN HAPPEN**
- **Electric shock can cause serious personal injury or death.**

**HOW TO AVOID THE HAZARD**
- **Don't use trimmer in rain, in wet locations, or on wet hedges or shrubbery.**
- **Do not charge the trimmer in wet or damp locations.**

**WARNING**

**POTENTIAL HAZARD**
- **During operation foreign objects may be thrown into your eyes or bystander's eyes.**

**WHAT CAN HAPPEN**
- **Contact with thrown objects can cause severe eye damage.**

**HOW TO AVOID THE HAZARD**
- **Always wear safety goggles, safety glasses with side shields, or a full face mask during operation. We recommend Wide Vision Safety Mask for use over eyeglasses or standard safety glasses with side shields.**
- **Keep all bystanders and pets away from the area of operation.**

**CAUTION**

**POTENTIAL HAZARD**
- **Blades will coast after trimmer is turned off.**

**WHAT CAN HAPPEN**
- **Contact with moving blades can cause serious personal injury.**

**HOW TO AVOID THE HAZARD**
- **Wait for all moving parts to stop before setting trimmer down or handling blades.**

- **Avoid Dangerous Environment** – Don't use hedge trimmer in damp or wet locations.
- **Do not** use battery–operated hedge trimmer in rain.
- **Do not** charge hedge trimmer in rain, or in wet locations.
- **Do not** use battery–operated hedge trimmer in an explosive or vaporous environment. The motor causes sparks in the trimmer which may ignite the fumes.

- **Keep Children Away** – All visitors should be kept at a distance from work area.
- **Dress Properly** – Do not wear loose clothing or jewelry. They can be caught in moving parts. Use of work gloves and substantial footwear is recommended when working outdoors. Wear protective hair covering to contain long hair.
- **Don't Overreach** – Keep proper footing and balance at all times.
- **Stay Alert** – Watch what you are doing. Use common sense. Do not operate hedge trimmer when you are tired.
- **Use Safety Glasses** – Always use face or dust mask if operation is dusty.
- **Use Right Appliance** – Do not use appliance for any job except that for which it is intended.
- **Avoid Unintentional Starting** – Don't carry hedge trimmer with finger on switch.
- **Danger – Risk of Cut** – Keep Hands Away From Blades – Keep both hands on handles when power is on.
- **Don't Force Hedge Trimmer** – It will do the job better and with less likelihood of a risk of injury at the rate for which it was designed.
- Do not cut branches over 3/8 inches (9.5 mm) thick.
- Do not attempt to remove cut material nor hold material to be cut when blades are moving. Ensure that the trigger is off and the lock–off button is not pressed when clearing jammed material from blades. Do not grasp the exposed cutting blades or cutting edges when picking up or holding the hedge trimmer.

### Maintenance and Storage

- **Maintain Hedge Trimmer With Care** – Keep cutting edge sharp and clean for best performance and to reduce the risk of injury. Follow instructions for lubricating and changing accessories. Keep handles dry, clean, and free from oil and grease.
- **Check Damaged Parts** – Before further use of the hedge trimmer, a guard or other part that is damaged should be carefully checked to determine that it will operate properly and perform its intended function. Check for alignment of moving parts, binding of moving parts, breakage of parts, mounting, and any other condition that may affect its operation. A guard or other part that is damaged should be properly repaired or replaced by an authorized service center unless indicated elsewhere in this manual.
- **Use only genuine Toro replacement batteries**, available from your local Authorized Service Dealer.
- **Do not dispose of the battery in a fire.** The battery may explode. Check with local codes for possible special disposal instructions.
- **Do not open or mutilate the battery.** Released chemicals may be corrosive and may cause damage to the eyes or skin. It may be toxic if swallowed.
- **Do not place battery on a metal surface.** Battery terminals may spark and or over heat if place on a metal surface.
- Exercise care in handling batteries in order not to short the battery with conducting materials such as rings, bracelets, and keys. The battery or conductor may overheat and cause burns.
- When inserting batteries into this product, the proper polarity or direction must be observed. Reverse insertion of batteries can result in leakage or explosion.
- Ensure that the trigger is off and the lock–off button is not pressed before servicing, cleaning, or removing material from the hedge trimmer.
- Always install the sheath over the blade when finished using the trimmer.
- **Store Idle Hedge Trimmer Indoors** – When not in use, hedge trimmer should be stored indoors in dry location, out of reach of children.
- **DO NOT ATTEMPT TO REPAIR.** For service or repair call 1-800-237-2654 in the United States. See that only original Toro replacement parts are used.

## Save These Instructions

## Safety and Instruction Decals

Safety decals and instructions are easily visible to the operator and are located near any area of potential danger. Replace any decal that is damaged or lost.

**ON BLADE**

DUAL–ACTION CUT ○ *DANGER: KEEP HANDS AWAY FROM BLADES READ INSTRUCTION MANUAL BEFORE USING* ○ *DANGER: Éloinger les mains de la lame. lire le guide d'utilisation avant de se servir de l'outil.*

**ON CHARGER**

TO PROLONG BATTERY LIFE, Avoid Leaving Trimmer On Charge For More Than 24 Hours.

# Installation

## Mounting the Charger (Model 51596 Only)

The charger should be mounted indoors (such as a garage or other dry place), near a power outlet, and out of reach of children. You will need to supply three screws with heads approximately 1/4 inch (6.3 mm) across and, if mounting the charger on wall board, three wall anchors for the screws

**1.** Lay the provided template (page 15) against the wall and mark the three hole locations as shown in Figure 1.

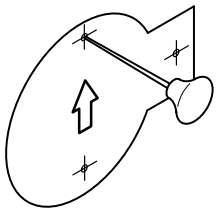

m–4110

**Figure 1**

**2.** Drill pilot holes as follows:

- If installing the charger on wall board, plaster, or cement, drill three holes for the wall anchors (as indicated by the wall anchor manufacturer) at the marked locations.
- If installing the charger on wood, drill three holes, slightly smaller than the diameter of the screw threads, at the marked locations.

**3.** Install the screws as follows:

- If installing the charger on wall board, plaster, or cement, insert the three wall anchors into the holes then thread the screws into the wall anchors until they are 1/8 inch (5 mm) from the edge of the wall anchor (Fig. 2).

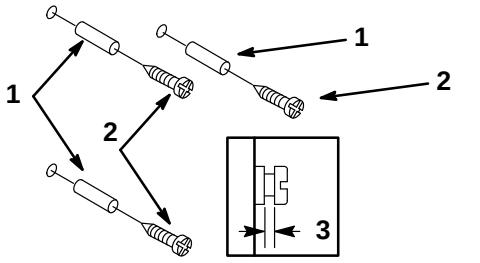


m–4111

**Figure 2**

1. Wall Anchors
2. Screws
3. 1/8 inch

- If installing the charger on wood, drive the screws into the three holes until they are 1/8 inch (5mm) from the wall.

A. Place the keyhole slots in the back of the charger over the three screws and push down on the charger to secure it (Fig. 3).

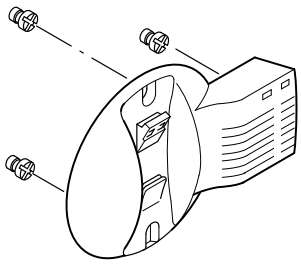

m–4093

**Figure 3**

## Mounting the Charger (Model 51597 Only)

The charger should be mounted indoors (such as a garage or other dry place), near a power outlet, and out of reach of children. You will need to supply two screws with heads approximately 1/4 inch (0.6 cm) across and, if mounting the charger on wall board, two wall anchors for the screws

1. Place the charger against the wall and mark the two hole locations, through the top of the keyholes in the charger.
2. Drill pilot holes as follows:
   - If installing the charger on wall board, plaster, or cement, drill two holes for the wall anchors (as indicated by the wall anchor manufacturer) at the marked locations.
   - If installing the charger on wood, drill two holes, slightly smaller than the diameter of the screw threads, at the marked locations.
3. If installing the charger on wall board, plaster, or cement, insert the two wall anchors into the holes (Fig. 4).
4. Hold the charger against the wall and drive the screws into the wall anchors or holes (Fig. 4).

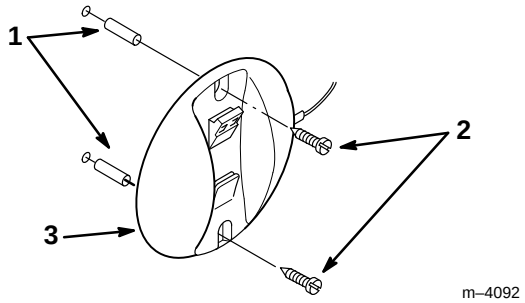


**Figure 4**

1. Wall anchors
2. Screws
3. Charger

# Operation

**IMPORTANT: Before using your trimmer, read the Important Safety Instructions in the Safety section; refer to page 3.**

## Features

Compare the features illustrated in Figure 5 with your trimmer to familiarize yourself with it.

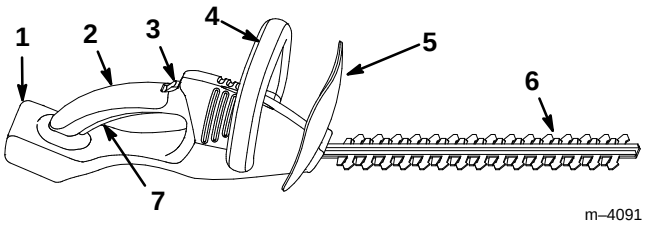


**Figure 5**

1. Battery compartment
2. Rear handle
3. Lock–off button
4. Front handle
5. Guard
6. Blade
7. Trigger

### Battery

The battery powers the trimmer.

### Handles

Use the front and rear handles to hold the trimmer during operation.

### Lock-off Button

The lock-off button reduces the possibility of accidental starting. You must press the lock–off button before you can squeeze the trigger. The lock–off button resets each time the trigger is released.

### Trigger

To turn on the trimmer, press and hold the lock-off button, squeeze the trigger, then release the lock-off button. Release the trigger to turn off the trimmer.

**WARNING**

**POTENTIAL HAZARD**
- **If the trigger is pressed, the trimmer will be running.**

**WHAT CAN HAPPEN**
- **Accidental starting of your trimmer could result in serious personal injury.**

**HOW TO AVOID THE HAZARD**
- **Only squeeze the trigger when you have both hands on the handles and are ready to operate the trimmer.**

## Guard

The guard helps to protect you from flying debris. **Never** remove the guard. Replace it immediately if it becomes damaged.

## Blade

Use the blade to cut hedges. **Do not** handle the blade without first ensuring that the lock–off button and trigger are off. When not in use, keep the blade covered in the supplied protective sheath.

# Charging the Battery

Your trimmer requires charging before use. The procedure for charging your trimmer will vary, depending on the model you purchased. Refer to the appropriate section below.

## Model 51595

This trimmer has a built–in charger that can be connected to a wall outlet via a removable cord and transformer. It takes approximately 8 hours to fully charge this trimmer. When not in use, this trimmer will lose about 1% of its charge per day. Therefore, charge it just prior to using the trimmer.

**IMPORTANT: Do not leave the charger plugged into a power outlet for more than 24 hours. If the charger is plugged in longer than 24 hours, battery damage WILL occur.**

1. Place the trimmer indoors (such as a garage or other dry place), on a high shelf, near an outlet, but out of reach of children.
2. Insert the round plug on the charging cord into the receptacle under the rear handle (Fig. 6).

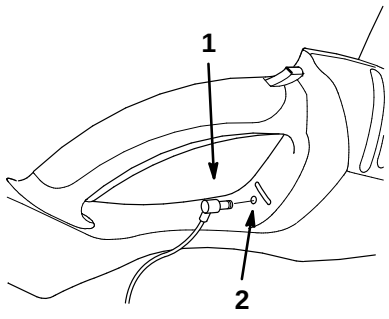


M–4098

**Figure 6**

1. Round plug
2. Receptacle

3. Plug the transformer on the other end of the power cord into a power outlet.
4. Ensure that the red charging light under the trimmer handle is on (Fig. 7).

**Note:** If the light is not lit, ensure that the power cord and transformer are completely inserted into the trimmer and power outlet. If the light still does not come on, contact you local Authorized Toro Dealer.

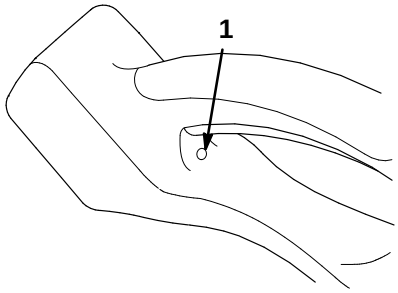


m–4097

**Figure 7**

1. Red charging light

5. After a maximum of 24 hours, disconnect the power cord from the trimmer and from the power outlet.

## Model 51596

This trimmer has a wall mounted charger. It takes approximately 3 hours to fully charge this trimmer, after normal use. If the battery is fully drained, it may take as long as 8 hours. When not in use, this trimmer will lose about 1% of its charge per day. Therefore, charge it just prior to using the trimmer.

**IMPORTANT: Do not leave the charger plugged into a power outlet for more than 24 hours. If the charger is plugged in longer than 24 hours, battery damage WILL occur.**

1. Insert the trimmer into the charger so that the hooks on the charger slide into the slots on the bottom of the trimmer (Fig. 8).

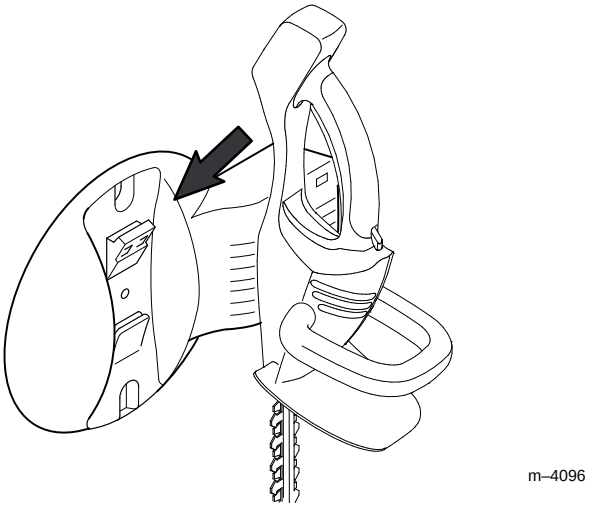


**Figure 8**

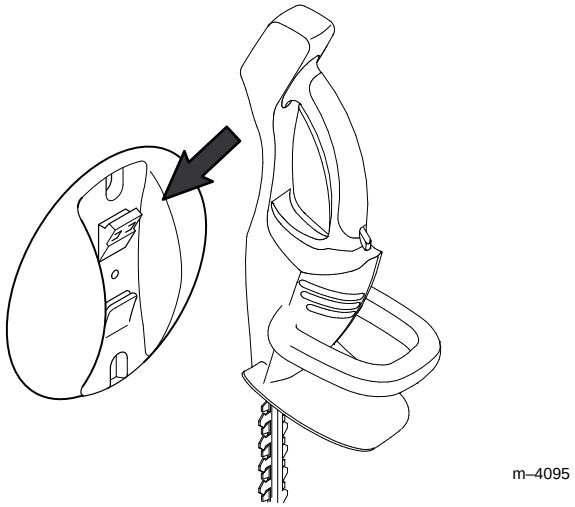


**Figure 9**

2. Plug the power cord of the charger into a power outlet.
3. Ensure that the green power light and orange charging light on the charger are on.

**Note:** If the green light is lit but the orange is not, ensure that the trimmer is fully seated into the charger. If neither light is lit, ensure that the power cord is completely inserted into the power outlet and that the power outlet is functioning properly. If you cannot solve the problem, contact your Authorized Toro Dealer.

4. After a maximum of 24 hours, disconnect the power cord from the power outlet.

## Model 51597

This trimmer has a wall mounted charger. It takes approximately 8 hours to fully charge this trimmer. When not in use, this trimmer will lose about 3 to 10% of its charge per day. Therefore, charge it just prior to using the trimmer.

**IMPORTANT: Do not leave the charger plugged in to a power outlet for more than 24 hours. If the charger is plugged in longer than 24 hours, battery damage WILL occur.**

1. Insert the trimmer into the charger so that the hooks on the charger slide into the slots on the bottom of the trimmer (Fig. 9).
2. Plug the power cord of the charger into a power outlet.
3. Ensure that the red charging light on the charger is on.

**Note:** If the light is not lit, ensure that the trimmer is fully seated into the charger and that the power cord is completely inserted into the power outlet. If the light still does not come on, contact you local Authorized Toro Dealer.

4. After a maximum of 24 hours, disconnect the power cord from the power outlet.

## Charging Tips

- To obtain maximum battery life, charge the trimmer for no more than 16 hours. **Do not leave the charger plugged in to a power outlet for more than 24 hours. If the charger is plugged in longer than 24 hours, battery damage WILL occur.**
- Do not charge the trimmer in a wet or damp location.
- Do not charge the trimmer at temperatures under 40°F (5°C) or above 105°F (41°C). Temperatures outside this range can damage the battery. For best results, charge the battery at around 75°F (25°C).
- Charge the trimmer whenever it begins to slow down and act sluggish. Do not completely discharge the battery.
- During charging the charger will be warm and make a soft humming sound.
- Use only authentic Toro replacement batteries and chargers with your trimmer.

## Preparing For Operation

For your protection always wear work gloves, long pants, a long sleeved shirt, shoes (not sandals), and safety glasses when operating the trimmer (Fig. 10). Also, always operate the trimmer using both hands.




**Figure 10**

**WARNING**

**POTENTIAL HAZARD**
- **It is possible to attempt to use the trimmer with only one hand.**

**WHAT CAN HAPPEN**
- **Operating trimmer with only one hand could cause serious personal injury.**

**HOW TO AVOID THE HAZARD**
- **Always use both hands when operating the trimmer.**

**WARNING**

**POTENTIAL HAZARD**
- **Trimmer has sharp blades.**

**WHAT CAN HAPPEN**
- **Contact with moving trimmer blades can cause serious personal injury or damage.**

**HOW TO AVOID THE HAZARD**
- **Stay alert and watch what you are doing.**
- **Do not operate trimmer when you are fatigued or under the influence of drugs, alcohol or medication.**
- **Do not operate trimmer if the guard is missing or damaged.**
- **Do not use the guard as a gripping surface.**
- **Do not use the trimmer with only one hand.**
- **If using a ladder, take care not to over reach, unbalancing yourself.**

**WARNING**

**POTENTIAL HAZARD**
- **The operation of any hedge trimmer can result in foreign objects being thrown into your eyes or bystander's eyes.**

**WHAT CAN HAPPEN**
- **Contact with thrown objects can cause severe eye damage.**

**HOW TO AVOID THE HAZARD**
- **Always wear safety goggles, safety glasses with side shields, or a full face mask during operation. We recommend Wide Vision Safety Mask for use over eyeglasses or standard safety glasses with side shields.**
- **Keep all bystanders and pets away from the area of operation.**

## Trimming A Hedge

1. Hold the trimmer with both hands and with the blade away from you **before** squeezing the trigger.
2. Push the lock-off button and squeeze the trigger (Fig. 11).

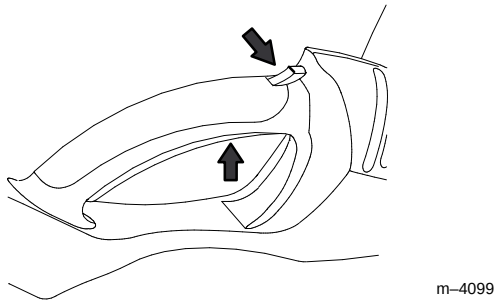


**Figure 11**

**WARNING**

**POTENTIAL HAZARD**
- **When trimmer is in operation, sharp parts are moving.**

**WHAT CAN HAPPEN**
- **Any part of the body coming in contact with moving parts could result in serious personal injury.**

**HOW TO AVOID THE HAZARD**
- **Keep hands and fingers away from moving parts.**

3. Trim the hedge.
4. When finished, release the trigger.
5. Cover the blade with the sheath.
6. Charge the battery (refer to Charging the Battery, page 7).

# Trimming Techniques

- If desired, you can use a string to help cut your hedge level. Decide how high you want the hedge. Then, stretch a piece of string along the hedge at this height. Trim the hedge just above this guide line of string (Fig. 12).

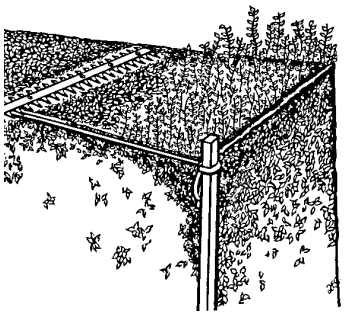

**Figure 12**

- Do not try to trim hedges which are above your normal reach. You must hold the trimmer with both hands at all times while operating.
- Trim the side of a hedge so that it will be slightly narrower at the top as shown in Figure 13. More of the hedge will be exposed when shaped this way and its growth will be more uniform.

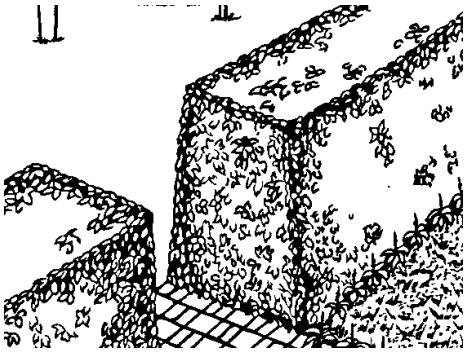

**Figure 13**

- When trimming new growth, use a wide, sweeping action so that the stems are fed directly into the cutter blade. Older growth will have thicker stems and will be trimmed easiest by using a sawing movement.
- Do not try to cut stems that are larger than 3/8 in. thick or those obviously too large to feed into the cutter blade. Use a non-powered hand saw or pruning saw to cut the larger stems.

# Maintenance

Continued safe and dependable operation requires routine maintenance.

## Recommended Maintenance Schedule

| Service Item | Service Operation | Frequency |
|---|---|---|
| Housing | Clean built-up dirt. | After each use |
| Blade | Lubricate | After each use |
| Blade | Replace | When worn or damaged |
| Battery | Replace | When it will not charge |

**WARNING**

**POTENTIAL HAZARD**
- **Use of non-Toro replacement parts could cause product damage.**

**WHAT CAN HAPPEN**
- **Using a damaged product could cause serious personal injury.**

**HOW TO AVOID THE HAZARD**
- **When servicing use only original Toro replacement parts.**
- **Never use “will-fit” replacement parts.**

## Cleaning the Trimmer

Avoid using solvents when cleaning plastic parts. Most plastics are susceptible to various types of solvents and may be damaged by their use. Use clean cloths to remove dirt, carbon dust, etc.

**WARNING**

**POTENTIAL HAZARD**
- **Plastic parts can be damaged by many cleaning solvents and other fluids.**

**WHAT CAN HAPPEN**
- **Damaged parts can cause trimmer to operate improperly which could lead to serious personal injury.**

**HOW TO AVOID THE HAZARD**
- **Do not let brake fluids, gasoline, petroleum-based products, penetrating oils, etc., contact the plastic parts. They contain chemicals that can damage plastics.**

## Blade Lubrication

For easier operation and longer blade life, lubricate the hedge trimmer blade before and after each use.

1. Ensure that the trimmer is off and the lock–off switch is not pressed.
2. Apply light machine oil along the edge of the blade (Fig. 14).

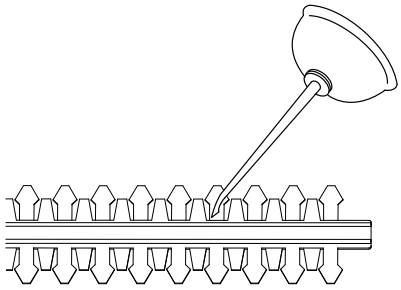

m–4100

**Figure 14**

## Lubrication

All of the bearings in this tool are lubricated with a sufficient amount of high grade lubricant for the life of the unit under normal operating conditions. Therefore, no further lubrication is required.

## Blade Replacement

Replace the blade when it is worn or damaged.

1. Remove the two screws securing the battery cover and remove the cover (Fig. 15).

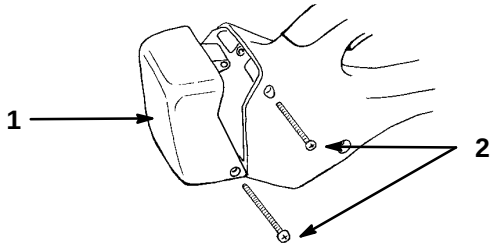


**Figure 15**

1. Battery cover
2. Screw

**2.** Pull the battery out of the trimmer (Fig. 16).

**3.** Disconnect the the wire leads from the battery (Fig. 16).

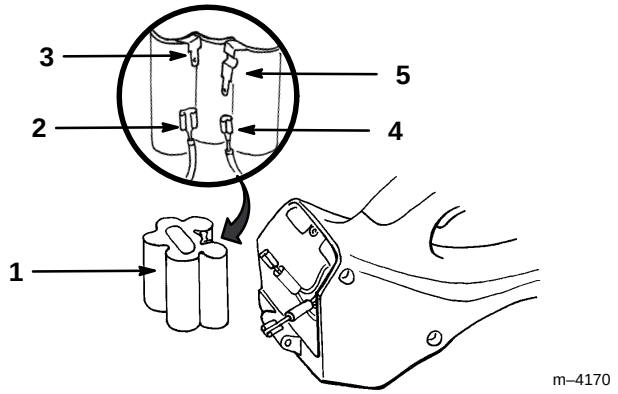


**Figure 16**

1. Battery (some models may have a slightly different configuration)
2. Negative connector
3. Negative terminal
4. Positive connector
5. Positive terminal

**4.** Place hedge trimmer upside down on workbench and remove the blade cover screws and the blade cover (Fig. 17).

**Note:** Be very careful throughout this procedure not to lose the screws or the screw inserts on the inside of the trimmer.

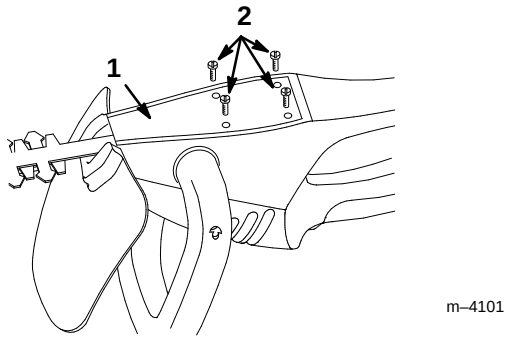


**Figure 17**

1. Blade cover
2. Blade cover screws

**5.** Align the cams that are fitted in the blade loops by moving the blades slightly (Fig. 18).

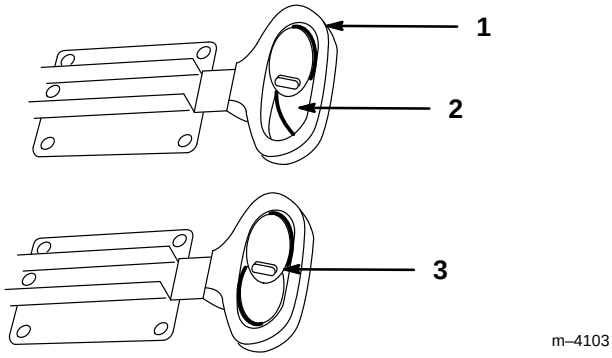


**Figure 18**

1. Blade loops
2. Misaligned cams
3. Aligned cams

**6.** Remove blade screws (Fig. 19).

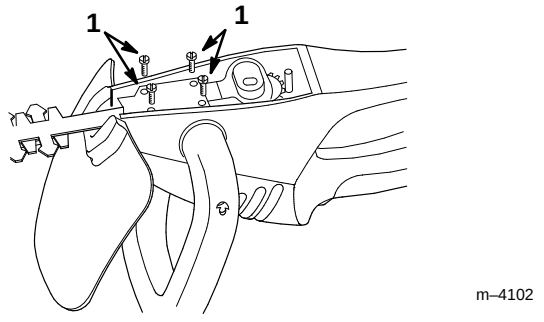


**Figure 19**

1. Blade screws

**7.** Pull the blade up and off of the cams, removing the blade from the trimmer.

**8.** Ensure that the cams are still aligned (Fig. 18).

9. Slide the new blade into the blade housing, while aligning the blade loops and pushing them down over both cams.

10. Replace blade screws (Fig. 19).

11. Replace blade cover and secure it with the screws removed previously (Fig. 17)

12. Connect the wire leads to the battery (Fig. 16).

13. Insert the battery into the trimmer.

14. Replace the battery cover and secure it with the screws removed previously (Fig. 15).

## Replacing the battery

Although the battery is designed to have a long life, it will be necessary to replace it when it no longer holds a charge.

**IMPORTANT: Do not set the battery on a metal surface. The battery terminals may spark or overheat if placed on a metal surface.**

1. Remove the two screws securing the battery cover and remove the cover (Fig. 15).

2. Pull the battery out of the trimmer (Fig. 16).

3. Disconnect the the wire leads from the battery (Fig. 16).

4. Connect the wire leads to the new battery (Fig. 16).

5. Insert the new battery into the trimmer.

6. Replace the battery cover and secure it with the screws removed previously (Fig. 15).

7. Recycle the old battery.

**IMPORTANT: The battery contains nickel-cadmium (models 51595 and 51596) or nickel-metal hydride (model 51597). The battery must be recycled or disposed of properly.**

**The EPA certified RBRC® Battery Recycling Seal (Fig. 20) on the nickel-cadmium (Ni–Cd) battery indicates that Toro is voluntarily participating in an industry program to collect and recycle these batteries at the end of their useful life, when taken out of service in the United States or Canada. The RBRC® program provides a convenient alternative to placing used Ni–Cd batteries into the trash or the municipal waste stream, which may be illegal in your area. Please call 1–800–8–BATTERY™ for information on Ni–Cd battery recycling and disposal bans/restrictions in your area. Toro's involvement in this program is part of our commitment to preserving our environment and conserving our natural resources.**

m–4536




**Figure 20**

**Only contact RBRC for nickel-cadmium batteries (models 51595 and 51596 only). For the nickel-metal hydride batteries (model 51597), contact your local waste management authorities for disposal information.**

## Maintenance and Storage Tips

- If the trimmer is dropped, inspect it for damage, such as a bent blade, cracked housing, or any other damage. If damaged, contact your Authorized Toro Dealer.
- Fertilizers and other chemicals can cause corrosion of metal and/or plastic parts. Do not store the trimmer near these chemicals.
- Do not allow any liquid to get into the trimmer. Never immerse the trimmer in water or other liquid.

# Screw Location Template for Model 51596

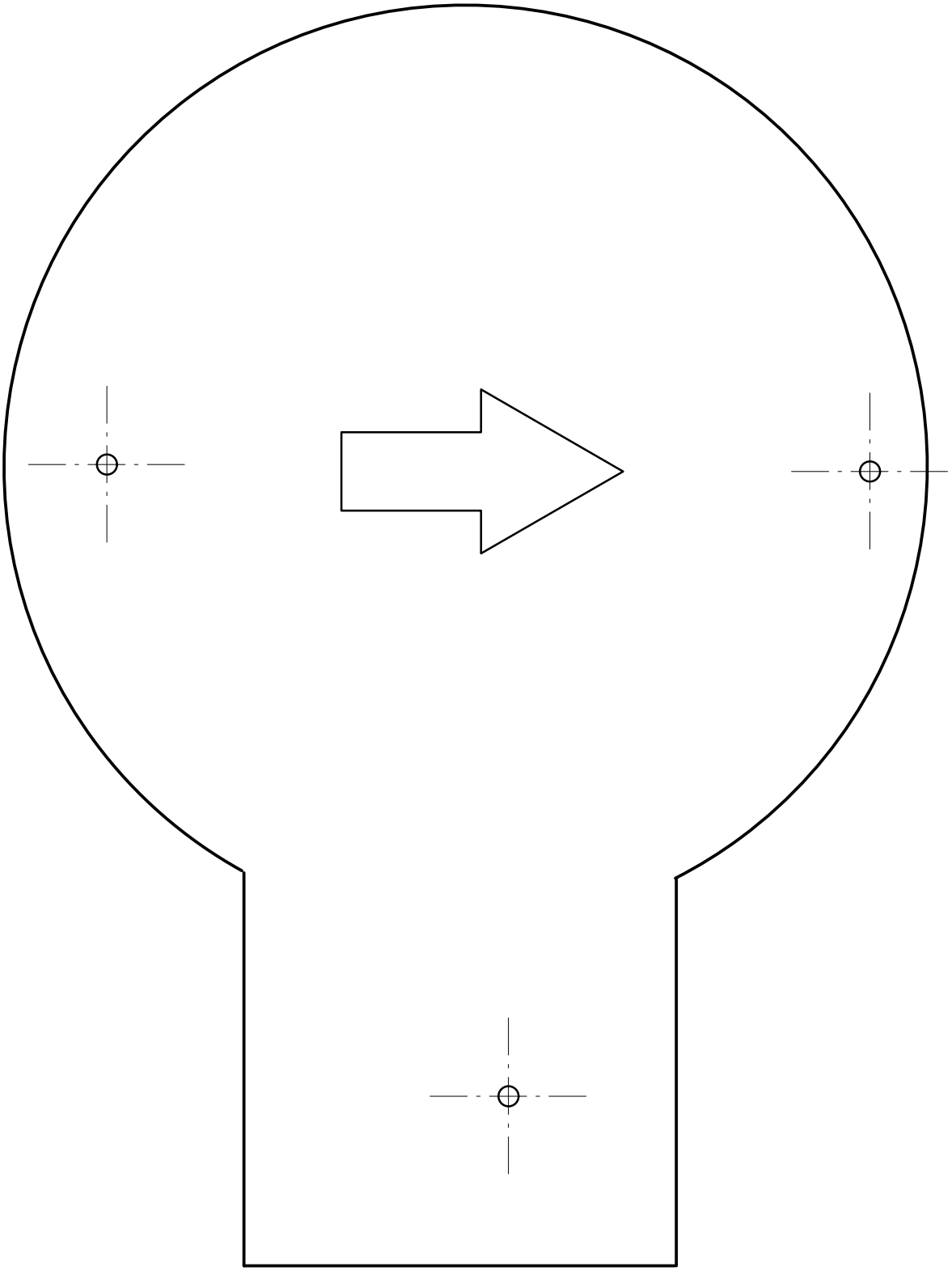

# The Toro Promise

**A Full Two Year Residential Use Warranty**
**For the United States, Canada and Mexico**

The Toro Company warrants this TORO Product for two years against defects in material or workmanship. To receive a replacement or repair, at Toro's option, just return the complete unit, postage prepaid, to the seller. (U.S. customers ONLY may return their unit, with proof of purchase, to any TORO Master Service Dealer or the TORO Service Center, 5300 Shoreline Blvd., Mound, MN 55364.) This warranty covers product defects only. **It does not cover incidental or consequential damages. Some states do not allow the exclusion or limitation of incidental or consequential damages, so the above limitation may not apply to you.** This warranty gives you specific rights, and you may have other rights which vary from state to state. If all other remedies fail, you may contact us at The Toro Company, Customer Service Department, 8111 Lyndale Ave S, Bloomington, MN, 55420-1196. (Do not return defective product to this address.)

**COUNTRIES OTHER THAN THE UNITED STATES, CANADA OR MEXICO**

Customers who have purchased TORO products exported from the United States, Canada or Mexico should contact their TORO Distributor (Dealer) to obtain guarantee policies for your country, province or state. If for any reason you are dissatisfied with your Distributor's service or have difficulty obtaining guarantee information, contact the TORO importer.