FORM NO. 3323–178

TORO®

MODEL NO. 07233 – 90001 & Up

OPERATOR'S MANUAL

WORKMAN® 3420–LP

Liquid Cooled Gasoline Industrial Vehicle

To assure maximum safety, optimum performance, and to gain knowledge of the product, it is essential that you or any other operator of the machine read and understand the contents of this manual before the engine is ever started. Pay particular attention to the SAFETY INSTRUCTIONS highlighted by this symbol–



The safety alert symbol means CAUTION, WARNING or DANGER — personal safety instruction. Failure to comply with the instruction may result in personal injury or death.



© The TORO Company – 1999

FOREWORD

The TORO WORKMAN® was developed to provide an efficient, versatile, trouble free and economical work vehicle. The latest concepts of engineering, design and safety have been incorporated into this machine, along with the highest quality parts and workmanship. Excellent service will be derived if proper operation and maintenance practices are followed.

WARNING

The WORKMAN® is an off−highway vehicle only, and is not designed, equipped, or manufactured for use on public streets, roads or highways.

You know, since you have purchased the industry leader in maintenance excellence, that future performance and dependability are of prime importance. TORO also is concerned about future use of the machine and of safety to the user. Therefore, this manual must be read by you and those involved with the WORKMAN® to make sure that safety, proper set-up, operation and maintenance procedures are followed at all times. The major sections of the manual are:

1. Safety Instructions
2. Set-Up Instructions
3. Before Operating
4. Operating Instructions
5. Maintenance

Safety, mechanical and some general information in this manual are emphasized. **DANGER**, **WARNING** and **CAUTION** identify safety messages. Whenever the triangle safety symbol appears, it is followed by a safety message that must be read and understood. For more details concerning safety, read the safety instructions on pages 5 − 7. **IMPORTANT** identifies special mechanical information and **NOTE** identifies general information worthy of special attention.

WARNING:

The engine exhaust from this product contains chemicals known to the State of California to cause cancer, birth defects, or other reproductive harm.

PROTOTYPE

FOREWORD

The TORO WORKMAN® meets the requirements of ANSI B56.8a–1994.

Supervisors, operators and service persons should be familiar with the following standards and publications: (The material may be obtained from the address shown).

- Flammable and Combustible Liquids Code:
  ANSI/NFPA 30
- National Fire Protection Association:
  ANSI/NFPA #505; Powered Industrial Trucks
  ADDRESS:
  National Fire Prevention Association
  Barrymarch Park
  Quincy, Massachusetts 02269 U.S.A
- ANSI/ASME B56.8 Personal Burden Carriers
  ADDRESS:
  American National Standards Institute, Inc.
  1430 Broadway
  New York, New York 10018 U.S.A.
- ANSI/UL 558; Internal Combustion Engine Powered Industrial Trucks
  ADDRESS:
  American National Standards Institute, Inc.
  1430 Broadway
  New York, New York 10018 U.S.A.
  OR
  Underwriters Laboratories
  333 Pfingsten Road
  Northbrook, Illinois 60062 U.S.A.

OPTIONAL SPARK ARRESTER

In some places a spark arrester muffler must be used because of local, state or federal regulations. The spark arrester available from your local Toro Distributor is approved by the United States Department of Agriculture and the United States Forest Service.

When the machine is used or operated on any California forest, brush or grass covered land, a properly operating spark arrester must be attached to the muffler. The operator is violating state law, Section 442 Public Resources Code if a spark arrester is not used.

If help concerning set up, operation, maintenance or safety is ever needed, contact your local Authorized TORO Distributor. In addition to genuine TORO replacement parts, the distributor also has optional equipment for the complete line of TORO turf care equipment. Keep your TORO all TORO. Buy genuine TORO parts and accessories.

PROTOTYPE

TABLE OF CONTENTS

SAFETY INSTRUCTIONS 5–7
SAFETY AND INSTRUCTION DECALS 8–9
SPECIFICATIONS 10
LOOSE PARTS CHART 11
SET–UP INSTRUCTIONS 12–13
Install Wheels 12
Install Steering Wheel 12
Install Front Fenders 12
Install Seat Frame 12
Install Seat Back Cushions and Manual Tube . 13
Activate and Charge Battery 13
BEFORE OPERATING 15–17
Check Crankcase Oil 15
Refueling 15
Check Cooling System 16
Check Transaxle / Hydraulic Fluid 16
Check torque of Wheel Nuts 17
Check Brake Fluid 17
CONTROLS 18–19
OPERATING INSTRUCTIONS 20–24
Pre–starting Checks 20
Starting Engine 20
Driving Vehicle 20
Stopping Vehicle 20
Stopping Engine 20
New Vehicle Break–in 20
Check Interlock System 21
Operating Characteristics 21
Passengers 21
Speed 22
Turning 22
Braking 22
Tipovers 22
Overhead Objects 22
Hills 23
Loading 23
Transporting Vehicle 23
Towing Vehicle 23
Trailer Towing 24
SERVICE INTERVAL CHART 25
LUBRICATION 26–27
MAINTENANCE CHART & CHECKLIST 28
MAINTENANCE 30–37
Jacking Vehicle 30
General Air Cleaner Maintenance Practices . . 30
Servicing Air Cleaner 30
Changing Engine Oil And Filter 31
Fuel System 31
Removing Debris From Cooling System 31
Changing Engine Coolant 31
Adjusting Belts 32
Checking Oil Level In Governor 33
Adjusting Accelerator 33
Changing Transaxle / Hydraulic Fluid 33
Replacing Hydraulic Filter 33
Cleaning Hydraulic Strainer 34
Replacing Spark Plugs 34
Adjusting Brake Pedal 34
Adjusting Clutch Pedal 35
Adjusting Parking Brake 35
Adjusting Shift Cables 35
Inspect Brakes 36
Inspect Tires 36
Front Wheel Toe–in 36
Fuses 36
Jump Starting Procedure 36
Battery Storage 37
Battery Care 37
MAINTENANCE SCHEDULE 38
HYDRAULIC SCHEMATIC 39
ELECTRICAL SCHEMATIC 40
IDENTIFICATION AND ORDERING 41
Model And Serial Numbers 41
NOTES 42–43
WARRANTY . . . . . BACK COVER

PROTOTYPE

SAFETY INSTRUCTIONS

The WORKMAN® was designed and tested to offer safe service when operated and maintained properly. Although hazard control and accident prevention partially are dependent upon the design and configuration of the machine, these factors are also dependent upon the awareness, concern, and proper training of the personnel involved in the operation, maintenance and storage of the machine. Improper use or maintenance of the machine can result in injury or death.

This is a specialized utility vehicle designed for off−road use only. its ride and handling will have a different feel than what drivers experience with passenger cars or trucks. So take time to become familiar with your WORKMAN®.
Not all of the attachments that adapt to the WORKMAN® are covered in this manual. See the specific Operator's Manual provided with attachment for additional safety instructions. READ THESE MANUALS.

TO REDUCE THE POTENTIAL FOR INJURY OR DEATH, COMPLY WITH THE FOLLOWING SAFETY INSTRUCTIONS.

SUPERVISOR'S RESPONSIBILITIES

1. Make sure operators are thoroughly trained and familiar with the Operator's Manual and all labels on the vehicle.

2. Be sure to establish your own special procedures and work rules for unusual operating conditions (e.g. slopes too steep for vehicle operation). Use the 3rd High Lockout switch if high speed could result in a safety or vehicle abuse situation.

BEFORE OPERATING

PROTOTYPE

3. Operate the machine only after reading and understanding the contents of this manual. A replacement manual is available by sending complete model and serial number to: The Toro Company, 8111 Lyndale Avenue South, Minneapolis, Minnesota 55420.

4. Never allow children to operate the vehicle. Never allow adults to operate it without proper instructions. Only trained and authorized persons should operate this vehicle. Make sure all operators are physically and mentally capable of operating the vehicle. Anyone who operates the vehicle should have a motor vehicle license.

5. This vehicle is designed to carry only you, the operator, and one passenger in the seat provided by the manufacturer. Never carry any other passengers on the vehicle.

6. Never operate the vehicle when under the influence of drugs or alcohol.

7. Become familiar with the controls and know how to stop the engine quickly.

8. Keep all shields, safety devices and decals in place. If a shield, safety device or decal is malfunctioning, illegible, or damaged, repair or replace it before operating the machine.

9. Always wear substantial shoes. Do not operate machine while wearing sandals, tennis shoes or sneakers. Do not wear loose fitting clothing or jewelry which could get caught in moving parts and cause personal injury.

10. Wearing safety glasses, safety shoes, long pants and a helmet is advisable and required by some local safety and insurance regulations.

11. Keep everyone, especially children and pets, away from the areas of operation.

12. Before operating the vehicle, always check all parts of the vehicle and any attachments. If something is wrong, stop using vehicle. Make sure problem is corrected before vehicle or attachment is operated again.

13. Since LP−gas is highly flammable, handle it carefully.

A. Refueling should be done by qualified personnel only.

B. Occupants should not remain in the vehicle while refueling.

C. Refuel in a well ventilated area. Do not fill tank indoors.

D. NO SMOKING or OPEN FLAMES and all Pilots out.

E. Remove protective cap from filler valve and connect filler hose.

F. Avoid body contact with liquid fuel, as its freezing effect can have the same results as a severe burn.

14. Check the safety interlock system daily for proper operation; refer to page 26. If a switch should malfunction, replace the switch before operating machine. After every two years, replace the interlock switches in the safety system, whether they are working properly or not.

SAFETY INSTRUCTIONS

WHILE OPERATING

15. Operator and passenger should remain seated whenever the vehicle is in motion. Operator should keep both hands on steering wheel, whenever possible and passenger should use hand holds provided. Keep arms and legs within the vehicle body at all times. Never carry passengers in box or on attachments. Remember your passenger may not be expecting you to brake or turn and may not be ready.

16. Never overload your vehicle. Name plate (located under dash on passenger side) shows load limits for vehicle. Never overfill attachments or exceed the vehicle maximum GVW.

17. When starting the engine:

A. Sit on operator's seat and engage parking brake.

B. Disengage any attachments and return hand throttle lever to OFF position (if so equipped).

C. Move shift lever to NEUTRAL and depress clutch pedal.

D. Depress accelerator pedal slightly.

E. Turn ignition key to START.

F. If engine is cold, it may crank for 10 seconds before starting.

G. If engine does not start after initial cranking, wait 30–60 seconds before cranking again.

18. This vehicle is equipped for use on flat surfaces only, not for hilly terrain. If vehicle is to be driven in hilly areas or loose terrain, install ROPS kit. ROPS provides roll–over protection.

19. This vehicle is not equipped for use where overhead objects may fall onto the operator. If vehicle is to be used in warehouse or storage situations where overhead objects exist, install a FOPS kit for falling object protection.

20. Using the machine demands attention. Failure to operate vehicle safely may result in a accident, tip over of vehicle and serious injury or death. Drive carefully. To prevent tipping or loss of control:

A. Use extreme caution, reduce speed and maintain a safe distance around sand traps, ditches, creeks, ramps, any unfamiliar areas or other hazards.

B. This vehicle is not equipped for use on rough, uneven off–road terrain. Watch for holes or other hidden hazards.

C. Use caution when operating vehicle on a slope. Normally travel straight up and down slopes. Reduce speed when making sharp turns or when turning on hillsides. Avoid turning on hillsides whenever possible. If vehicle is to be driven through steep slopes, undulating or rough terrain, it is recommended that a optional ROPS Kit, be purchased and installed on vehicle. ROPS kit provides tip–over / roll–over protection.

D. Use extra caution when operating vehicle on wet surfaces, at higher speeds or with a full load. Stopping time will increase with a full load. Shift into a lower gear before starting up or down a hill.

E. When loading bed, distribute load evenly. Use extra caution if the load exceeds the dimensions of the vehicle/bed. Operate vehicle with extra caution when handling off–center loads that cannot be centered. Keep loads balanced and secure to prevent them from shifting.

F. Avoid sudden stops and starts. Do not go from reverse to forward or forward to reverse without first coming to a complete stop.

G. Do not attempt sharp turns or abrupt maneuvers or other unsafe driving actions that may cause a loss of vehicle control.

H. Before backing up, look to the rear and assure no one is behind. Back up slowly.

I. Watch out for traffic when near or crossing roads. Always yield the right of way to pedestrians and other vehicles. This vehicle is <u>not</u> designed for use on streets or highways. Always signal your turns or stop early enough so other persons know what you plan to do. Obey all traffic rules and regulations.

J. Never operate vehicle in or near an area where there is dust or fumes in the air which are explosive. The electrical and exhaust systems of the vehicle can produce sparks capable of igniting explosive materials.

PROTOTYPE

K. Always watch out for and avoid low over hangs such as tree limbs, door jambs, over head walkways, etc. Make sure there is enough room over head to easily clear the vehicle and your head.

L. If ever unsure about safe operation, STOP WORK and ask your supervisor.

21. Do not touch engine, transaxle, radiator, muffler or muffler shield while engine is running or soon after it has stopped because these areas may be hot enough to cause burns.

22. If the machine ever vibrates abnormally, stop immediately, turn engine off, wait for all motion to stop and inspect for damage. Repair all damage before commencing operation.

SAFETY INSTRUCTIONS

23. Before getting off the seat:

A. Stop movement of the machine.

B. Shut engine off and wait for all movement to stop.

C. Set parking brake.

D. Remove key from ignition.

E. Block wheels if machine is on an incline.

MAINTENANCE

24. Before servicing or making adjustments to the machine, stop engine, set parking brake and remove key from ignition to prevent accidental starting of the engine.

25. Never work under a raised bed without placing bed safety support on fully extended cylinder rod.

26. LP−Gas, as all fuels, must be treated with respect and care. LP−Gas is by nature odorless and invisible. An identifying odor has been added so that the presence of gas can be quickly detected. On detection of escaping gas take the following steps:

A. Immediately shut off the tank service valves.

B. Eliminate all possible outside sources of ignition.

C. Summon qualified LP−Gas personnel.

27. In case of fire take the following steps:

A. Stop flow of gas as quickly as possible. If fire occurs, never put out flame unless gas can be shut off.

B. Notify Fire Department and clear immediate area of all people.

C When gas flow is stopped, put out the fire. Usually when flow of gas is cutoff, fire will automatically stop. Carbon dioxide and dry chemical extinguishers may be used. DO NOT USE CARBON TETRACHLORIDE EXTINGUISHERS (PYRENE ETC.)

D. If gas flow cannot be immediately stopped direct water on tanks to keep them cool, but do not put out fire.

28. Make sure all hydraulic line connectors are tight, and all hydraulic hoses and lines are in good condition before applying pressure to the system.

29. Keep body and hands away from pin hole leaks or nozzles that eject hydraulic fluid under high pressure. Use paper or cardboard, not hands, to search for leaks. Hydraulic fluid escaping under pressure can have sufficient force to penetrate skin and do serious damage. If fluid is injected into the skin it must be surgically removed within a few hours by a doctor familiar with this form of injury or gangrene may result.

30. Before disconnecting or performing any work on the hydraulic system, all pressure in system must be relieved by stopping engine.

31. To make sure entire machine is in good condition, keep all nuts, bolts and screws properly tightened.

32. To reduce potential fire hazard, keep the engine area free of excessive grease, grass, leaves and accumulation of dirt.

33. If the engine must be running to perform a maintenance adjustment, keep hands, feet, clothing, and any parts of the body away from the engine and any moving parts. Keep everyone away.

34. Do not overspeed engine by changing governor settings. Maximum engine speed is 3650 rpm. To assure safety and accuracy, have an Authorized TORO Distributor check maximum engine speed with a tachometer.

35. If major repairs are ever needed or assistance is required, contact an Authorized TORO Distributor.

36. To be sure of optimum performance and safety, always purchase genuine TORO replacement parts and accessories. Replacement parts and accessories made by other manufacturers could be dangerous. Altering this vehicle in any manner may affect the vehicle's operation, performance, durability or its use may result in injury or death. Such use could void the product warranty of The TORO Company.

37. This vehicle should not be modified without the TORO Company's authorization. Direct any inquiries to:

The TORO Company
Commercial Division
Vehicle Engineering Dept.
300 West 82nd St.
Bloomington, Minnesota 55420−1196, USA

PROTOTYPE

SOUND PRESSURE LEVEL

This unit has an equivalent continuous A-weighted sound pressure at the operator ear of: 78 dB(A), based on measurements of identical machines per Directive 84/538/EEC and amendments.

VIBRATION LEVEL

Hand-Arm

This unit does not exceed a vibration level of 2.5 m/s^2 at the hands based on measurements of identical machines per ISO 5349 procedures.

Whole Body

This unit does not exceed a vibration level of 0.5 m/s^2 at the posterior based on measurements of identical machines per ISO 2631 procedures.

SAFETY AND INSTRUCTION DECALS

The following safety and instruction decals are installed on the machine. If any become damaged or illegible, replace them. Decal part numbers are listed below and in the parts catalog. Order replacements from your Authorized TORO Distributor.

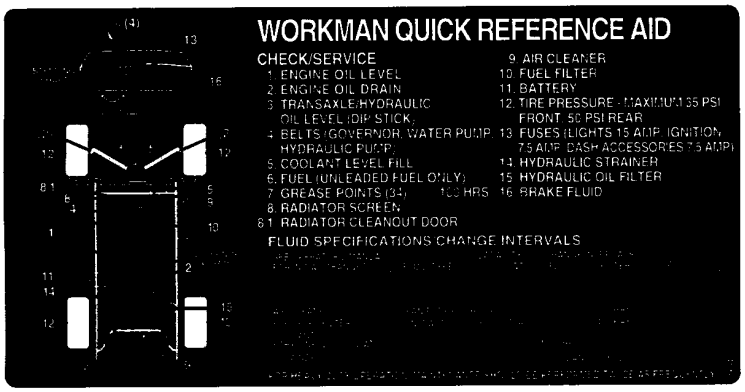

ON REAR SKIRT
(Part No. 99−9438)

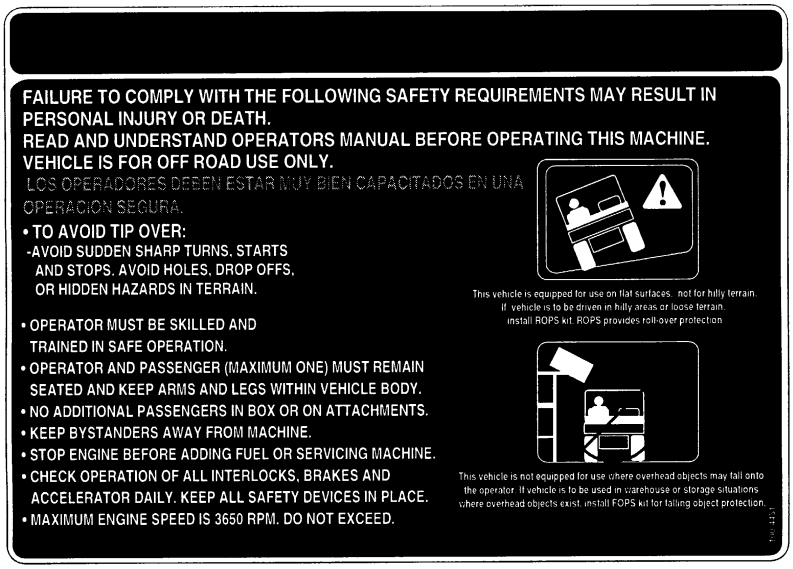

ON SKIRT
(Part No. 100−4451)



ON FAN SHROUD
(Part No. 76−8750)

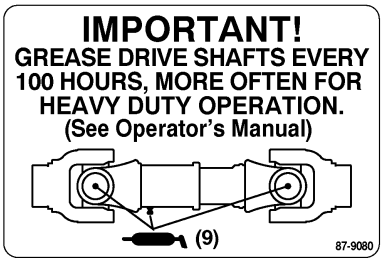

ON REAR AXLE TUBE
(Part No. 87−9080)



ON LEFT FRAME RAIL
(Part No. 66−6840)

PROTOTYPE

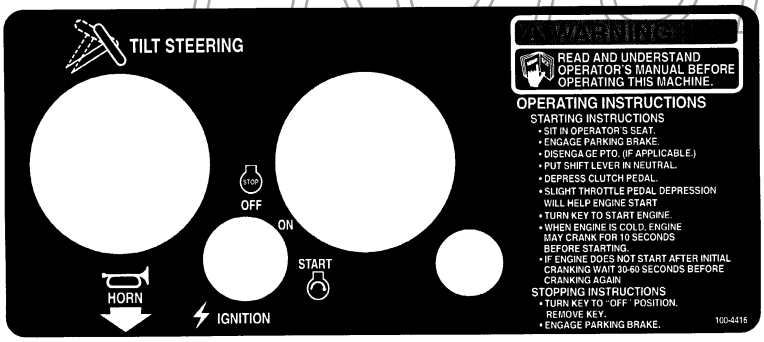

ON DASH
(Part No. 100−4416))

SAFETY AND INSTRUCTION DECALS

OPTIONAL FUSE BLOCK	OPTIONAL FUSE BLOCK	STANDARD FUSE BLOCK
		OPEN
		LIGHTS 15 AMP
		DASH 7.5 AMP
		IGNITION 7.5 AMP

87-6670

UNDER DASH NEXT TO FUSE BLOCK (Part No. 87−6670)

PARKING BRAKE

87 - 6020

ON CONSOLE (Part No. 87−6020)

WARNING

THE WORKMAN® IS AN OFF-HIGHWAY VEHICLE, AND IS NOT DESIGNED, EQUIPPED, OR MANUFACTURED FOR USE ON PUBLIC STREETS, ROADS OR HIGHWAYS. 94-5272

ON DASH (Part No. 94−5272)

DO NOT STEP

ON BATTERY COVER (Part No. 36−3400)

HITCH RATING: MAXIMUM TONGUE WEIGHT 200 LBS. MAXIMUM TRAILER WEIGHT; 1500 LBS.	TRANSMISSION FLUID USE DEXRON III AUTOMATIC TRANSMISSION FLUID OR EQUIVALENT

ON AXLE TUBE (Part No. 87−6060)



ON FAN SUPPORT (Part No. 80−8040)

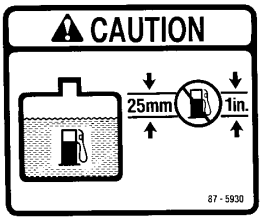

ON SKIRT (Part No. 87−5930)

WARNING

THIS ARM IS SPRING LOADED!

SEE OPERATORS MANUAL FOR DISASSEMBLY PROCEDURE

PROTOTYPE

ON SPRING CRADLE (Part No. 44−0760)

APPROXIMATE OPERATING WEIGHT 1400 LBS.
RATED CAPACITY 2600 LBS.
GVW 4000 LBS MAXIMUM
RATED CAPACITY SHOWN ABOVE MAY VARY WITH TIRE TYPE, TIRE PRESSURE, AND ATTACHMENT CONFIGURATION.
(REFER TO OPERATORS MANUAL FOR DETAILS.)
THIS UNIT COMPLIES WITH ANSI B56.8a - 1994 - TYPE LP

FM APPROVED

UNDER RIGHT SIDE OF DASH (Part No. 100−4496)

CAUTION

WATER OR DIRT IN THE AIR INLET SYSTEM CAN CAUSE SEVERE ENGINE DAMAGE.TO AVOID ENGINE DAMAGE:
- ALWAYS KEEP RADIATOR COVER INSTALLED. (IF SO EQUIPPED)
- WHEN CLEANING THE RADIATOR AREA, THE ENGINE MUST NOT BE RUNNING AND THE CLEAN OUT DOOR MUST BE OPEN. 97-9420

IN FRONT OF RADIATOR (Part No. 87−9420)

SPECIFICATIONS

Type: 4 wheel step through, out front operator style, two person vehicle. Certified to meet ANSI Specifications B56.8a–1994.

Engine: Toro LPG engine converted from a Mitsubishi three cylinder, liquid cooled, counterbalanced, gasoline engine; regulated to a maximum of 20 hp at 3600 rpm by a mechanical governor. 40 cu. in. (657 cc) displacement. Forced lubrication by gear pump. 40 amp alternator with I/C regulator. Spin–on oil filter.

Air Cleaner: Heavy duty, 2-stage, remote mounted air cleaner.

Battery: 12 volt with 460 cold cranking Amps @ 0 degrees F.

Cooling System: Mid mounted radiator with removable screen and lower clean out access. Cooling system capacity is approximately 4 qts. of 50/50 mixture of ethylene glycol anti–freeze.

Fuel System: Fuel system consists of Liquid withdrawal of LPG that is evaporated and regulated to working pressure on demand via engine vacuum. The vaporized mixture is fed into a mixing adapter in the air intake runner just ahead of the carburetor. The carburetor is left intact and used as a throttling device to change the air/fuel mixture flow rate into the engine. Fuel is stored in a 20 lb fork lift style tank.

Transmission: Rear transaxle configuration, twin axle drive. 3 speed synchromesh, H–shift pattern with high–low range providing 6 forward and 2 reverse speeds.

Clutch: 6.7" clutch and pressure plate.

Front Differential: (4wd only) 5.0 to 1 ratio

Frame: Welded, high strength steel channels and tubes.

Front Suspension: Independent "A" frame control arm, dual coil springs and dual shock absorbers with anti–sway bar.

Rear Suspension: DeDion axle (weight carrying axle is independent of transaxle), leaf spring and dual shock absorbers.

Steering System: Power assist, 3 position tilt steering wheel, 3–3/4 turns lock–to–lock. 17.5 to 1 ratio, 14" diameter steering wheel.

Tires: Front tires: 175/80 D13–Load Range B
Rear tires: 205/75 D14–Load Range C

Brakes: 4 wheel hydraulic, dual safety circuit self adjusting drum: 7" diameter front and 8" diameter rear. Hand actuated parking brake actuates rear brake shoes.

Hydraulics: 4 gpm pressure balanced gear pump provides hydraulic flow for power steering, lift and optional remote hydraulics. Lift control valve and dual cylinders for lifting dump box. Transaxle is used for reservoir for hydraulic system. 8 quart total capacity. Spin–on 25 micron hydraulic oil filter. 100 mesh strainer in transaxle.

Seat: Twin molded cushions and backrests, with shoulder and hip restraints.

Controls: Foot operated accelerator, clutch and brake pedals. Hand operated shifter, parking brake, and tilt steering levers. Ignition switch, light switch, horn button and 3rd high lockout switch.

Gauges: Hour meter, coolant temperature gauge. Warning light cluster includes engine low oil pressure and charge indicator. Tachometer optional.

Lights: Twin halogen headlights and single taillight. Rear stop light.

Interlocks: Clutch pedal must be depressed to start engine.

Ground Speed:

Forward Speeds
High range: 8.2/12.4/21.5 mph
Low range: 3.2/4.8/8.4 mph

Reverse Speeds w/24" Tires
High range: 7.8 mph
Low range: 3.0 mph

General Specifications (approx.):

Base Weight:	Dry w/o flatbed 1500lbs.
Rated Capacity:	*2,500 lbs.
*includes 200 lb. operator and 200 lb. passenger and loaded attachment.	
Maximum. Gross Vehicle Weight:	4,000 lbs.
Tow Capacity	Tongue weight 200 lbs.
	Maximum trailer weight 1,500 lbs.
Overall Width:	57"
Overall Length:	124.5"w/o bed
Height:	53.5"
Ground Clearance:	9.5" w/ no load
Wheel Base:	70"
Wheel Tread: (center line to center line)	46" Front
	46" Rear

Specifications and design subject to change without notice.

PROTOTYPE

LOOSE PARTS CHART

Note: Use this chart as a checklist to assure all parts necessary for assembly have been received. Without these parts, total set-up cannot be completed. Some parts may have already been assembled at factory.

DESCRIPTION	QTY.	USE
Wheel Nut Wheel−Front Wheel Nut Wheel−Rear	10 2 10 2	Mount wheels.
Steering wheel Foam Seal Washer Nut Cap	1 1 1 1 1	Install steering wheel
Fenders−Front Phillips Screw 10−24 Washer Locknut 10−24	2 14 14 14	Install front fenders
Seat Frame Seat Frame Bracket Carriage Bolts 3/8−16 x 3/4” lg. Flange Locknut 3/8−16 Capscrew 1/2−13 x 1” lg. Locknut 1/2−13 Capscrew 3/8−16 x 1” lg. Lockwasher 3/8−16	1 2 4 4 2 2 2 2	Install seat frame
Seat Back Cushion Seat Back Bracket Capscrew 1/4−20 x 3/4” lg. Washer 1/4” Carriage Bolts 5/16−18 x 5/8” lg. Flange Locknuts 5/16−18 Manual Tube R−Clamp	2 4 8 8 8 8 1 2	Install seat back cushion and manual tube
Operator’s Manual (Vehicle) Parts Catalog	2 1	Read before operating machine.
Registration Card	1	Fill out and return to Toro

PROTOTYPE

SET−UP INSTRUCTIONS

INSTALL WHEELS (Fig. 1)

1. Remove and discard fasteners securing wheels.

2. Mount wheels and torque nuts to 45-55 ft-lb.

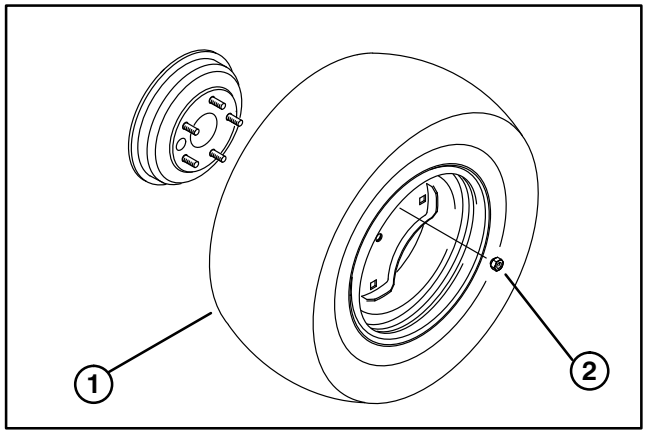

Figure 1
1. **Wheel**
2. **Wheel Nut**

INSTALL STEERING WHEEL (Fig. 2)

1. Remove jam nut from steering shaft. Slide foam seal, steering wheel and washer onto steering shaft.

2. Secure steering wheel to shaft with jam nut and tighten it to 10−15 ft-lb.

3. Install cap to steering wheel.

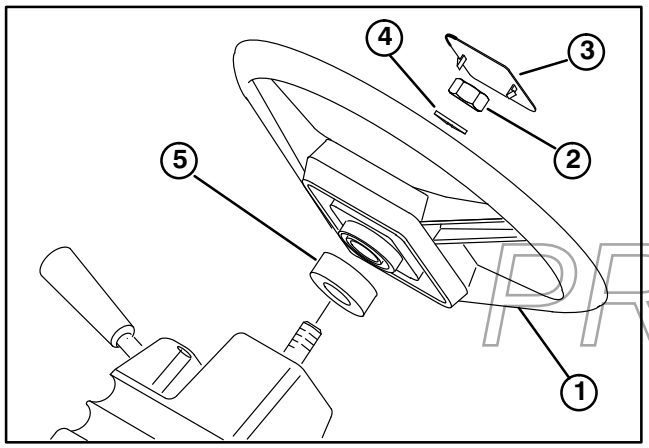

Figure 2
1. **Steering Wheel**
2. **Jam Nut**
3. **Cap**
4. **Washer**
5. **Foam Seal**

INSTALL FRONT FENDERS (Fig. 3)

1. Mount a fender to each side of skirt with (7) 10−24 Phillips screws, flat washers and locknuts.

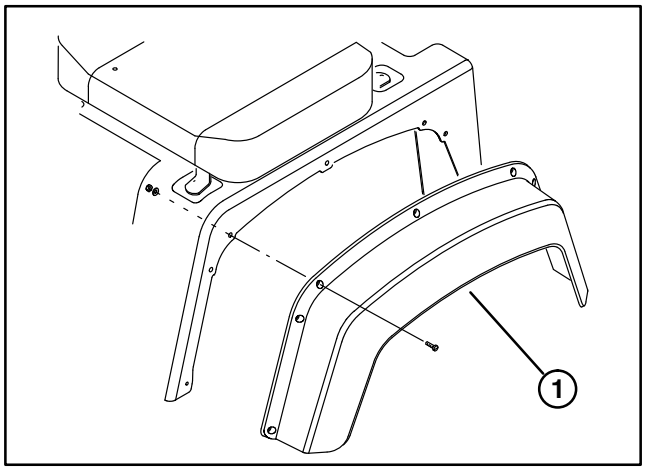

Figure 3
1. **Fender**

INSTALL SEAT FRAME (Fig. 4)

1. Mount a seat frame bracket to each end of seat frame with (2) 3/8−16 x 3/4" carriage bolts and flange locknuts.

2. Position seat frame on vehicle, aligning mounting holes in frame with holes in vehicle.

3. Secure front legs of seat frame to sides of vehicle floor with (2) 1/2−13 x 1" lg. capscrews and locknuts.

4. Secure bottom of each seat frame bracket to vehicle frame with a 3/8−16 x 1" capscrew and lockwasher.

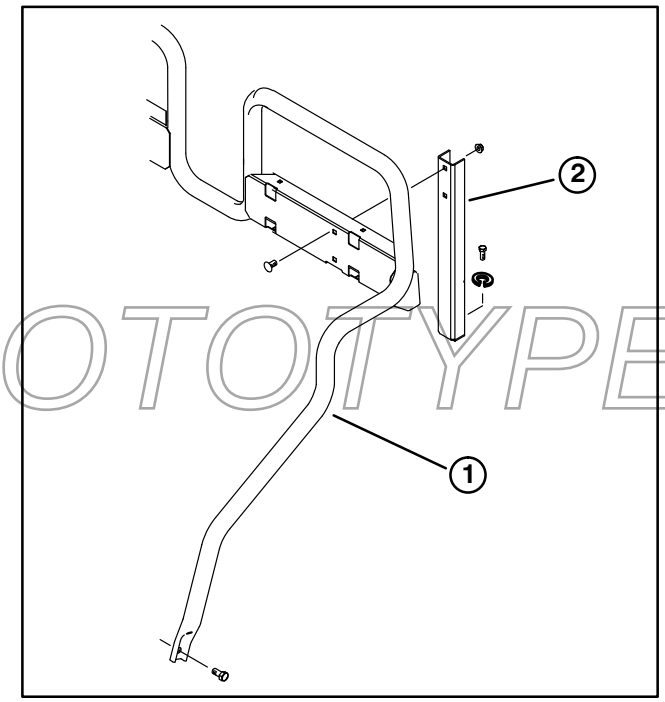

Figure 4
1. **Seat frame**
2. **Seat frame bracket**

PROTOTYPE

SET−UP INSTRUCTIONS

INSTALL SEAT BACK CUSHIONS AND MANUAL TUBE (Fig. 5 − 6)

1. Mount (2) seat back brackets to each seat back cushion with (4) 1/4−20 x 3/4" lg. capscrews and 1/4" flat washers. Position brackets on seat back cushions as shown in figure 5.

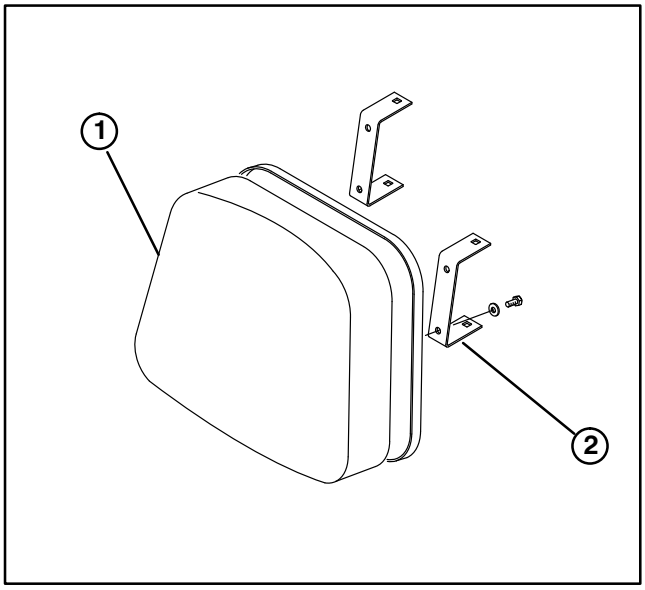

Figure 5
1. **Cushion seat back**
2. **Seat back bracket**

2. Mount cushion with seat back brackets to right side of seat back with (4) 5/16−18 x 5/8" lg. carriage bolts and flange locknuts.

3. Slide manual tube into (2) R−clamps.

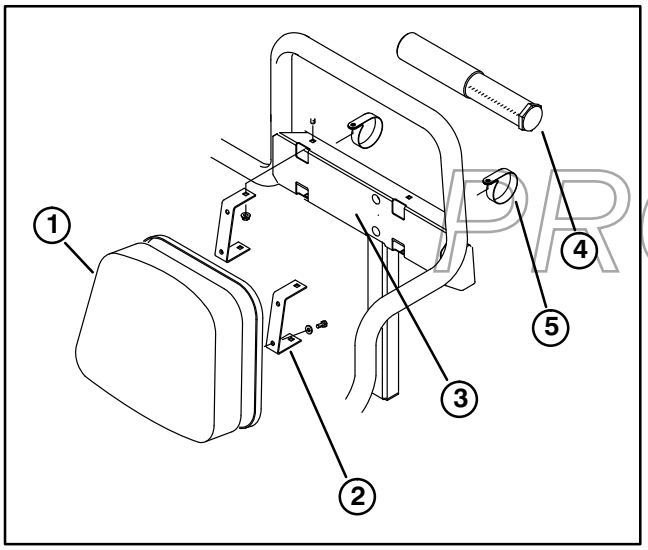

Figure 6
1. **Cushion seat back**
2. **Seat back bracket**
3. **Seat back**
4. **Manual tube**
5. **R−clamp**

4. Mount cushion with seat back brackets and manual tube R−clamps to left seat back with (4) 5/16−18 x 5/8" lg. carriage bolts and flange locknuts.

ACTIVATE AND CHARGE BATTERY (Fig. 7 & 8)

If Battery is not filled with electrolyte or activated, it must be removed from vehicle, filled with electrolyte and charged. Bulk electrolyte with 1.260 specific gravity can be purchased from a local battery supply outlet.

CAUTION

Electrolyte gases are explosive and can cause serious injury to eyes, lungs and skin. Wear safety goggles and rubber gloves when working with electrolyte or battery. Charge the battery in a well ventilated place so gasses produced while charging can dissipate. Since the gases are explosive, keep open flames and electrical spark away from the battery; do not smoke. Nausea may result if the gases are inhaled. Unplug charger from electrical outlet before connecting to or disconnecting charger leads from battery posts.

1. Loosen knobs securing battery cover to battery base and slide cover off.

2. Remove capscrew, washers and locknut securing battery hold down to battery base. Remove hold down and slide battery out of battery base.

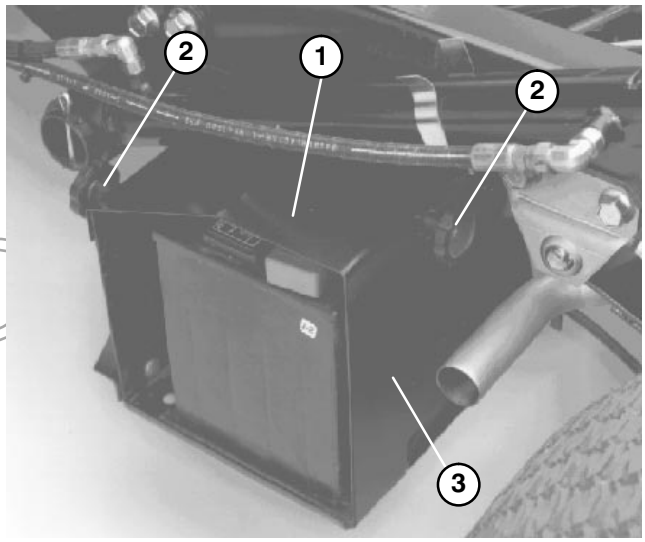

Figure 7
1. **Battery cover**
2. **Knob**
3. **Battery base**

3. Remove filler caps from battery and slowly fill each cell until electrolyte is just above the plates.

4. Replace filler caps and connect a 3 to 4 amp battery charger to the battery posts. Charge the battery at a rate of 3 to 4 amperes for 4 to 8 hours.

SET–UP INSTRUCTIONS

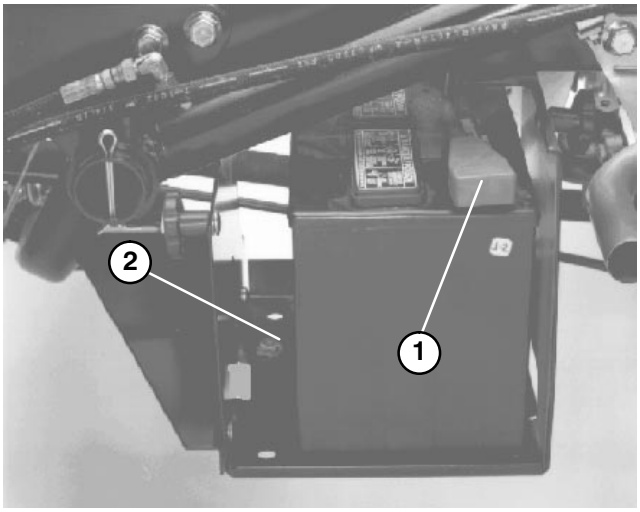

Figure 8

1. **Positive (+) cable**
2. **Hold down**

5. When battery is charged, disconnect charger from electrical outlet and battery posts.

6. Remove filler caps. Slowly add electrolyte to each cell until level is up to fill ring. Install filler caps.

IMPORTANT: **Do not overfill battery. Electrolyte will overflow onto other parts of the vehicle and severe corrosion and deterioration will result.**

7. Slide battery into battery base so battery terminals are toward the rear of the vehicle.

8. Install the positive cable (red) to the positive (+) terminal and the negative cable (black) to the negative (—) terminal of the battery and secure with capscrews and nuts. Slide the rubber boot over the positive terminal to prevent possible short–out from occurring.

WARNING

Connecting cables to the wrong post could result in personal injury and/or damage to the electrical system. Make sure battery or cables do not interfere or rub on any moving or hot parts.

9. Install battery hold down and secure to base with capscrew, washers and locknut.

10. Reinstall battery cover to battery base and tighten knobs.

PROTOTYPE

CAUTION

Before servicing or making adjustments to the machine, stop engine, set parking brake and remove key from the switch. Any load material must be removed from bed or other attachment before working under raised bed. Always rotate safety support to the down position before working under raised bed.

CHECK CRANKCASE OIL (Fig. 9)

The engine is shipped with approximately 3 quarts (w/ filter) of oil in the crankcase; however, level of oil must be checked before and after the engine is first started.

1. Position machine on a level surface.

2. Remove dipstick and wipe it with a clean rag. Insert dipstick into tube and make sure it is seated fully. Remove dipstick and check level of oil. If oil level is low, remove filler cap and add enough oil to raise level to FULL mark on dipstick.

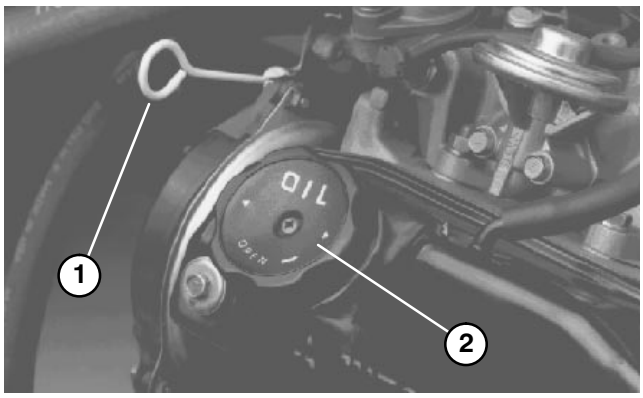

Figure 9

1. **Dipstick**
2. **Filler cap**

3. The engine uses any high-quality detergent oil having the American Petroleum Institute -API- "service classification" SG, SH or SJ. See viscosity chart for recommended weight to use.

4. Pour oil into fill opening until the oil level is up to the "FULL" mark on the dipstick. Add the oil slowly and check the level often during this process. DO NOT OVERFILL.

IMPORTANT: Check level of oil every 8 operating hours or daily. Change oil and filter initially after the first 50 hours of operation, thereafter, change oil and filter every 100 hours. However, change oil more frequently when engine is operated in extremely dusty or dirty conditions.

5. Install the dipstick firmly in place.

Anticipated atmospheric temperature range		SAE viscosity No.
C°	F°	
49	120	
38	100	
27	80	20w20 20w40 20w50
16	60	10w30 10w40 10w50
0	32	*5w20 5w30 5w40
−12	10	
−23	−10	
−29	−20	

* SAE 5W−20 Not recommended for sustained high speed vehicle operation.

REFUELING (Fig. 10)

Fuel system consists of Liquid withdrawal of LPG Fuel which is stored in a 20 lb fork lift style tank. Acceptable formulations of LP Gas would be any mixture meeting the specifications for Propane HD−5 of Gas Producers Association Standard 2140, or the specifications documented in California title 13 CCR 2292.6 or a mixture with a minimum of 90% propane by volume that can pass the ASTM D2713 test for moisture content.

1. Refueling should be done by qualified personnel only.

2. Occupants should not remain in the vehicle while refueling.

3. Turn off ignition. Set brakes.

4. Refuel in a well ventilated area. Do not fill tank indoors. NO SMOKING or OPEN FLAMES.

5. Remove propane tank from vehicle as follows:

A. Close valve on propane tank.

B. Disconnect hose quick connect fitting from quick connect fitting on tank.

C. Remove lynch pin securing tank to tank mount.

D. Lift front of tank off tank mount pin, slide tank forward releasing rear flange from clips and remove tank.

PROTOTYPE

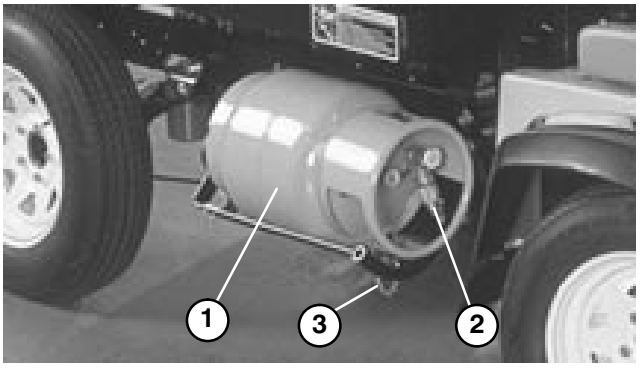

Figure 10

1. **Propane tank**
2. **Hose assembly w/quick connect**
3. **Lynch pin w/lanyard**

DANGER

Perform service work on an LP−Gas fuel system in an open or well ventilated area. Never allow the gas to escape in a closed area. LP−Gas is heavier than air and may settle in low places.

Avoid cutting and welding operations near LP−Gas systems.

Handle LP−Gas containers carefully. Do not drop or drag.

Installation and repair should be done only by qualified service personnel.

Never test for leaks with a flame. Use soap suds test or approved leak detector.

Do not fill tanks not properly labeled for LP−Gas. Do not put propane into tanks with working or service pressure less than 240 psi. Do not tamper with valves or fitting in the LP−Gas system.

6. Remove protective cap from filler valve and connect filler hose.

7. Open valve at end of fill hose. Next open main valve at storage tank.

8. Open 20% liquid level gauge on lank. (Slight opening of the valve is sufficient).

9. Turn propane pump on. Start fuel transfer. (Be sure all liquid valves are open before starting pump).

10. Never fill past the maximum safe level as indicated by 20% liquid level gauge. **DO NOT OVER−FILL.**

11. When liquid appears at liquid level gauge, close valve on end of fill hose immediately. Close 20% liquid level gauge hand tight (never use pliers).

12. Shut Propane Pump "OFF". Close main valve at storage tank. Disconnect all hoses and replace caps.

13. Avoid body contact with liquid fuel, as its freezing effect can have the same results as a severe burn.

14. Install propane tank to tank vehicle as follows:

A. Position tank onto tank mount, sliding rear flange of tank under clips and hole onto pin.

B. Secure tank to pin with lynch pin.

C Connect hose quick connect fitting to quick connect fitting on tank.

D. Open valve on propane tank.

CHECK COOLING SYSTEM (Fig. 11)

Capacity of cooling system is approximately 4 qts.

The cooling system is filled with a 50/50 solution of water and permanent ethylene glycol anti−freeze. Check level of coolant at beginning of each day before starting the engine.

1. Park machine on a level surface.

CAUTION

If engine has been running, pressurized hot coolant can escape if radiator cap is removed and cause burns. Allow engine to cool at least 15 minutes or until the radiator cap is cool enough to touch without burning hand.

2. Check coolant level. Coolant should be up to COLD line on reserve tank, when engine is cold.

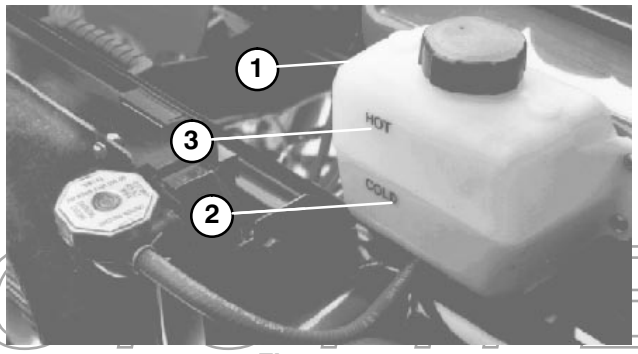

Figure 11

1. **Reserve tank** 2. **Cold line** 3. **Hot line**

3. If coolant is low, remove reserve tank cap and add a 50/50 mixture of water and permanent ethylene glycol anti−freeze. **DO NOT OVERFILL**.

4. Install reserve tank cap.

CHECK TRANSAXLE / HYDRAULIC FLUID (Fig. 12)

The transaxle reservoir is filled with Dexron III ATF. Check level before engine is first started and every 8 hours or daily, thereafter. Capacity of system is 7.5 qt.

1. Position the vehicle on a level surface.

2. Clean area around dipstick.

PROTOTYPE

3. Unscrew dipstick from top of transaxle and wipe it with a clean rag.

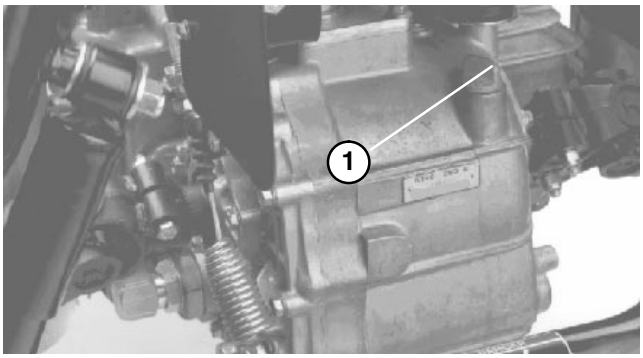

Figure 12
1. Dipstick

4. Screw dipstick into transaxle and make sure it is seated fully. Unscrew dipstick and check fluid level. Fluid should be up to top of flat portion of dipstick. If level is low, add enough fluid to achieve the proper level.

CHECK TORQUE OF WHEEL NUTS

WARNING

Failure to maintain proper torque could result in failure or loss of wheel and may result in personal injury. Torque front and rear wheel nuts to 45-65 ft −lb after 1-4 hours of operation and again after 10 hours of operation and every 200 hours thereafter.

CHECK BRAKE FLUID (Fig. 13)

The brake fluid reservoir is shipped from the factory filled with “DOT 3” brake fluid. Check level before engine is first started and every 8 hours or daily, thereafter.

1. Park machine on a level surface.

2. Fluid level should be up to FULL line on reservoir.

3. If fluid level is low, clean area around cap, remove reservoir cap and fill to proper level. **DO NOT OVERFILL**.

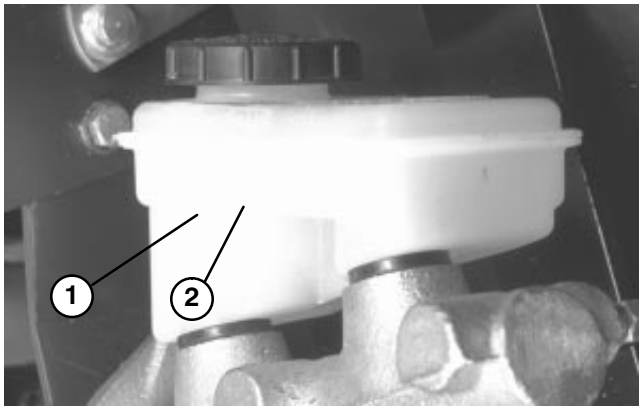

Figure 13
1. Brake fluid reservoir
2. Full line

PROTOTYPE

CONTROLS

Accelerator Pedal (Fig. 14) – The accelerator pedal gives the operator the ability to vary engine and ground speed of the vehicle, when the transmission is in gear. Depressing the pedal increases engine RPM and ground speed. Releasing pedal will decrease engine RPM and ground speed of the machine.

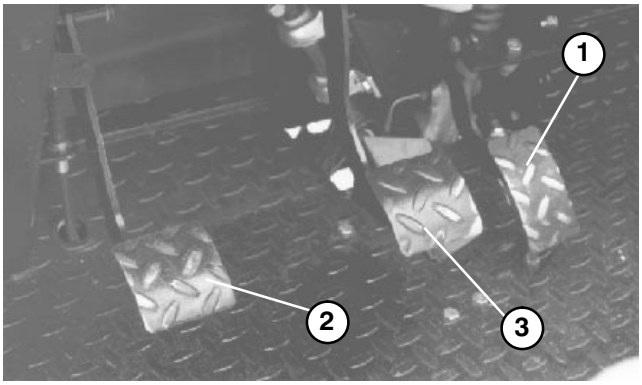

Figure 14
1. Accelerator pedal
2. Clutch pedal
3. Brake pedal

Clutch Pedal (Fig. 14) –The clutch pedal must be fully depressed to disengage clutch when starting engine or shifting transmission gears. Release pedal smoothly when transmission is in gear to prevent unnecessary wear on transmission and other related parts.

IMPORTANT: Do not ride clutch pedal during operation. Clutch pedal must be fully out or clutch will slip causing friction and wear. Never hold the vehicle stopped on a hill using the clutch pedal. Damage to the clutch may occur.

Brake Pedal (Fig. 14)) –The brake pedal is used to apply service brakes to stop or slow vehicle.

CAUTION

Worn or misadjusted brakes may result in personal injury. If brake pedal travels to within 1–1/2" of the vehicle floor board, the brakes must be adjusted or repaired.

Gear Shift Lever (Fig. 15) – Fully depress clutch pedal and move shift lever into desired gear selection. A diagram of the shift pattern is indicated below.

Shift Pattern

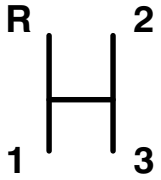

IMPORTANT: Do not shift the transaxle to the reverse or forward gear unless the vehicle is standing still. Damage to transaxle may occur.

CAUTION

Down shifting from too high a speed can cause the rear wheels to skid resulting in loss of vehicle control as well as clutch and/or transmission damage. Shift smoothly to avoid grinding gears.

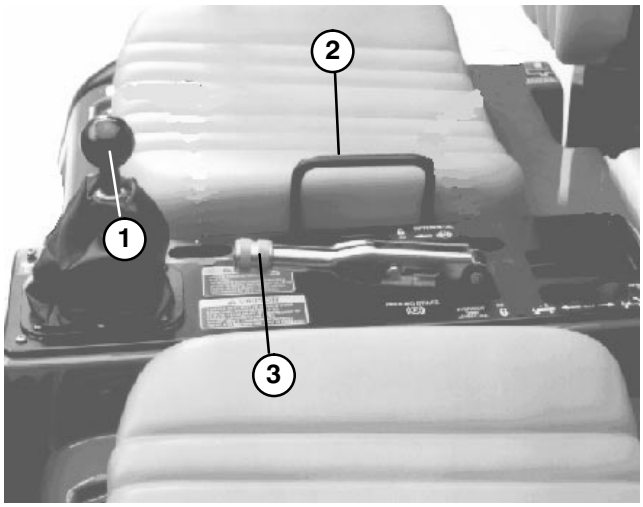

Figure 15
1. Gear shift lever
2. Passenger hand hold
3. Parking brake

PROTOTYPE

Parking Brake (Fig. 15) –Whenever the engine is shut off, the parking brake must be engaged to prevent accidental movement of the vehicle. To engage the parking brake, pull back on lever. To disengage, push lever forward. Make sure parking brake is released before moving vehicle. If vehicle is parked on a steep grade, make sure parking brake is applied. Also, shift the transmission into 1st gear on a uphill grade or reverse on a down hill grade. Place chocks at the down hill side of wheels.

Passenger Hand Hold (Fig. 15) – Left side of passenger seat.

CONTROLS

Tilt Steering Lever (Fig. 16) – Lever on right side of console allows steering wheel to be adjusted for operator comfort.

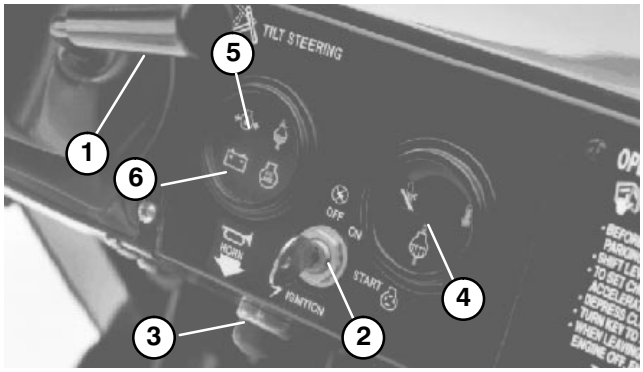

Figure 16

1. **Tilt steering lever**
2. **Ignition switch**
3. **Horn button**
4. **Coolant temp. gauge**
5. **Engine low oil pressure light**
6. **Charge indicator**

Horn Button (Fig. 16) – Pressing button activates horn.

Coolant Temperature Gauge (Fig. 16) – Registers coolant temperature in engine. Operates only when ignition switch is in On position.

Engine Low Oil Pressure Light (Fig. 16) – Light glows if engine oil pressure drops below a safe level while engine is running. If light flickers or remains ON, stop vehicle, turn off engine and check oil level. If oil level was low, but adding oil does not cause light to go out when engine is restarted, turn engine off immediately and contact your local TORO distributor for assistance.

IMPORTANT: Do not operate vehicle until repair is complete. Failure to observe this precaution may result in damage to the engine.

Ignition Switch (Fig. 16) – The ignition switch, used to start and stop the engine, has three positions: OFF, RUN and START. Rotate key clockwise — START position — to engage starter motor. Release key when engine starts. The key will move automatically to the ON position. To shut engine off, rotate key counterclockwise to OFF position.

Charge Indicator (Fig. 16) – Illuminates when battery is being discharged. If light illuminates during operation, stop vehicle, turn Off engine and check for possible causes, such as alternator belt.

IMPORTANT: If alternator belt is loose or broken, do not operate vehicle until adjustment or repair is complete. Failure to observe this precaution may result in damage to the engine.

To check operation of warning lights:

1. Apply parking brake.

2. Turn ignition key to “ON”, but do not start engine. The charge indicator and oil pressure lights should glow. If any light does not function, either a bulb is burned out or there is a malfunction in the system which must be repaired.

Note: Two functions of warning light cluster are not used: glow plug and high water temperature.

Hour Meter (Fig. 17) – Indicates the total hours of machine operation. The hour meter starts to function whenever the key switch is rotated to “ON” position.

Light Switch – On/off switch on dash.

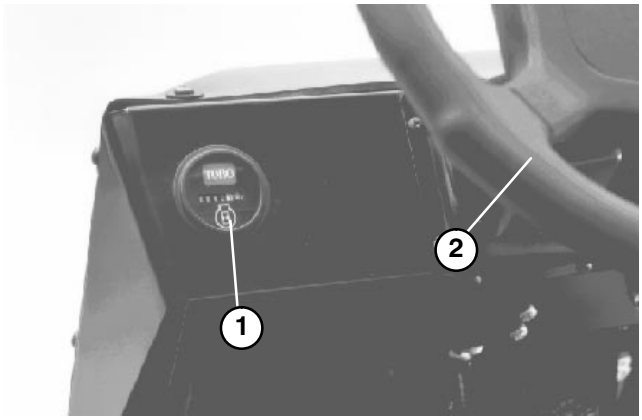

Figure 17

1. **Hour meter**
2. **Steering wheel**

Steering Wheel (Fig. 17) – Turns vehicle. If engine stalls or power assist fails due to a malfunction, vehicle steering will require greater effort.

PROTOTYPE

OPERATING INSTRUCTIONS

PRE−STARTING CHECKS

Safe operation begins before taking the vehicle out for a day's work. You should check these items each time:

1. Check tire pressure.

Note: These tires are different than car tires, they require less pressure to minimize turf compaction and damage.

2. Check all fluid levels and add the appropriate amount of Toro specified fluids, if any are found to be low.

3. Check brake pedal operation.

4. Check to see that the lights and horn are working.

5. Turn steering wheel to the left and right to check steering response.

6. Open LP Gas tank valve.

7. Check for oil or fuel leaks, loose parts and any other noticeable malfunctions. Make sure engine is off and all moving parts have stopped before checking for oil leaks, loose parts and other malfunctions.

If any of the above items are not correct, notify your mechanic or check with your supervisor before taking the vehicle out for the day. Your supervisor may want you to check other items on a daily basis, so ask what your responsibilities are.

STARTING ENGINE

1. Sit on operator's seat and engage parking brake.

2. Disengage PTO (if so equipped) and return hand throttle lever to OFF position (if so equipped).

3. Move shift lever to NEUTRAL position and depress clutch pedal.

4. Depress accelerator pedal slightly.

5. Insert key into ignition switch and rotate it clockwise to start the engine. Release key when engine starts.

NOTE: If engine is cold, it may crank for 10 seconds before starting.

NOTE: Allow engine to warm up for a minute or two at fast idle.

IMPORTANT: To prevent overheating of the starter motor, do not engage starter longer than 15 seconds. After 15 seconds of continuous cranking, wait 60 seconds before engaging starter motor again.

DRIVING VEHICLE

1. Release parking brake.

2. Fully depress clutch pedal.

3. Move gear shift lever to 1st gear.

4. Release clutch pedal smoothly while depressing accelerator pedal.

5. When vehicle gains enough speed, remove foot from accelerator pedal, fully depress clutch pedal, move gear shift lever to next gear and release clutch pedal while depressing accelerator pedal. Repeat procedure until desired speed is attained. Stop vehicle before shifting to reverse and forward.

Note: Avoid long periods of engine idling.

Note: Leaving ignition switch in "ON" position for long periods of time without running engine will discharge battery.

IMPORTANT: Do not hold front wheels turned against the right or left stops for longer than 5 seconds. The hydraulic pump may over heat, resulting in pump or steering gear damage.

6. Do not attempt to push or tow vehicle to get it started. Damage to drive train could result.

STOPPING VEHICLE

1. To stop machine, remove foot from accelerator pedal, depress clutch pedal, then depress brake pedal.

STOPPING ENGINE

1. To stop engine, rotate ignition key to OFF and engage parking brake. Remove key from switch to prevent accidental starting.

NEW VEHICLE BREAK−IN

Your Workman is ready for work. To provide proper performance and long vehicle life, follow these guidelines for the first 100 operating hours.

- Check the fluid and engine oil levels regularly and be alert for indications of overheating in any component of the vehicle.
- After starting a cold engine, let it warm up for about 15 seconds before shifting into gear.
- Avoid racing the engine.
- To assure optimum performance of the brake system, burnish (break−in) the brakes before use. To burnish brakes: Operate the vehicle at full speed for 3 minutes, apply the brakes for 30 seconds while engaging the traction pedal. Repeat these steps 20 to 30 times. To verify the brakes are completely burnished remove a rear tire and inspect the brake drum for residue. The residue color should be light grey to almost white color.
- Vary vehicle speeds during operation. Avoid excessive idling. Avoid fast starts and quick stops.
- A break−in oil for engine is not required. Original engine oil is the same type specified for regular oil changes.
- Refer to Maintenance section of Operator's Manual for any special low hour checks.

PROTOTYPE

OPERATING INSTRUCTIONS

CHECK INTERLOCK SYSTEM

The purpose of the interlock system is to prevent the engine from cranking or starting unless the clutch pedal is depressed.

CAUTION

The interlock switches are for the operator's protection, so do not bypass them. Check operation of the switches daily to assure interlock system is operating. If a switch is malfunctioning replace it before operating. Regardless whether switches are operating properly or not, replace them every two years to assure maximum safety. Do not rely entirely on safety switches – use common sense!

To verify clutch interlock switch operation:

1. Sit on operator's seat and engage parking brake. Move shift lever to NEUTRAL position.

2. Without depressing clutch pedal, rotate key clockwise to start position.

3. If engine cranks or starts, there is a malfunction in the interlock system that must be repaired before operating vehicle.

Refer to Attachment Operator's Manual for procedure on checking attachment interlock system.

OPERATING CHARACTERISTICS

The vehicle is designed with safety in mind. It has four wheels for added stability. It uses familiar automotive style controls, including the steering wheel, brake pedal, clutch pedal, accelerator pedal, and gear shifter. It is important to remember, however, that this vehicle is not a passenger car. It is a work vehicle and is designed for off road use only.

WARNING

The WORKMAN® is an off–highway vehicle only, and is not designed, equipped, or manufactured for use on public streets, roads or highways.

The vehicle has special tires, low gear ratios, a locking differential, and other features that give it extra traction. These features add to the versatility of the vehicle but, they can also get you into dangerous situations. You must keep in mind that the vehicle is not a recreation vehicle. It is not an all terrain vehicle. And, it is definitely not meant for "stunt driving" or "horsing around". It is a work vehicle, not a play vehicle. Children should not be allowed to operate the vehicle. Anyone who operates the vehicle should have a motor vehicle license.

If you are not experienced at driving the vehicle, practice driving it in a safe area away from other people. Be sure you are familiar with all the vehicle's controls, particularly those used for braking, steering and transmission shifting. Learn how your vehicle handles on different surfaces. Your operating skills will improve with experience, but as in operating any vehicle, take it easy as you begin. Be sure you know how to stop quickly in an emergency. If you need help, ask your supervisor for assistance.

Many factors contribute to accidents. You have control over several of the most important. Your actions, such as driving too fast for conditions, braking too fast, turning too sharp, and combinations of these, are frequent cause of accidents.

One of the major causes of accidents is fatigue. Be sure to take occasional breaks. It is very important that you stay alert at all times.

Never operate the vehicle, or any equipment, if you are under the influence of alcohol or other drugs. Even prescription drugs and cold medicines can cause drowsiness. Read the label on the medicine or check with your doctor or pharmacist if you are unsure about a certain medication.

One of the most important rules to follow is to go slower in unfamiliar areas. It is surprising how much damage and injury common things can cause. Tree branches, fences, wires, other vehicles, tree stumps, ditches, sand traps, streams, and other things found in most parks and golf courses can be hazardous to the operator and passenger.

Avoid driving when it is dark, especially in unfamiliar areas. If you must drive when it is dark, be sure to drive cautiously, use the head lights, and even consider adding additional lights.

PROTOTYPE

PASSENGERS

Whenever you have a passenger riding in the vehicle make sure he or she is holding on securely. Drive slower and turn less sharply because your passenger does not know what you are going to do next and may not be prepared for turning, stopping, accelerating, and bumps.

You and your passenger should remain seated at all times, keeping arms and legs inside the vehicle. The operator should keep both hands on steering wheel, whenever possible and passenger should use hand holds provided.

There should never be passengers in the dump box or on any attachments. The vehicle is meant to have one driver and only one passenger–no more.

OPERATING INSTRUCTIONS

SPEED

Speed is one of the most important variables leading to accidents. Driving too fast for the conditions can cause you to lose control and have an accident. Speed can also make a minor accident worse. Driving head–on into a tree at slow speed can cause injury and damage, but, driving into a tree at high speed can destroy the vehicle and kill you and your passenger.

Never drive too fast for the conditions. If there is any doubt about how fast to drive, slow down.

TURNING

Turning is another important variable leading to accidents. Turning too sharply for the conditions can cause the vehicle to lose traction and skid, or even tip over.

Wet, sandy and slippery surfaces make turning more difficult and risky. The faster you are going, the worse this situation becomes so, slow down before turning.

During a sharp turn at higher speeds, the inside rear wheel may lift off of the ground. This is not a flaw in the design, it happens with most four wheel vehicles including passenger cars. If this happens, you are turning too sharply for the speed at which you are traveling. Slow down!

BRAKING

It is good practice to slow down before you get near an obstacle. This gives you extra time to stop or turn away. Hitting an obstacle can damage the vehicle and its contents. More important, it can injure you and your passenger.

Gross vehicle weight has a major impact on your ability to stop and/or turn. Heavier loads and heavier attachments make a vehicle harder to stop or turn. The heavier the load, the longer it takes to stop.

The braking characteristics also change with no bed or attachment on the vehicle. Fast stops may cause the rear wheels to lock up before the front wheels lock up, which may affect the control of the vehicle. It is a good idea to decrease vehicle speed with no bed or attachment.

Turf and pavement are much slipperier when they are wet. It can take 2 to 4 times as long to stop on wet surfaces as on dry surfaces.

If you drive through standing water deep enough to get the brakes wet, they will not work well until they are dry. After driving through water, you should test the brakes to make sure they work properly. If they do not, drive slowly in first gear while putting light pressure on the brake pedal. This will dry the brakes out.

Do not downshift for braking on icy or slippery surfaces (wet grass) or while going down a hill because engine braking may cause skidding and loss of control. Shift to a lower gear before starting down a hill.

TIPOVERS

This vehicle is equipped for use on flat surfaces only, not for hilly terrain. If vehicle is to be driven in hilly areas or loose terrain, install ROPS kit. ROPS provides roll–over protection.

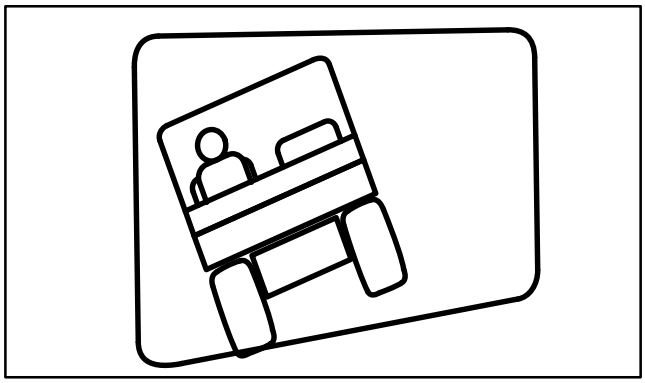

The best way for operators to prevent serious injury or death to themselves or others, is to familiarize themselves with the proper operation of the utility vehicle, to stay alert and to avoid actions or conditions which could result in an accident. In the event of a tip over, injury or death could result.

OVERHEAD OBJECTS

This vehicle is not equipped for use where overhead objects may fall onto the operator. If vehicle is to be used in warehouse or storage situations where overhead objects exist, install a FOPS kit for falling object protection.

PROTOTYPE

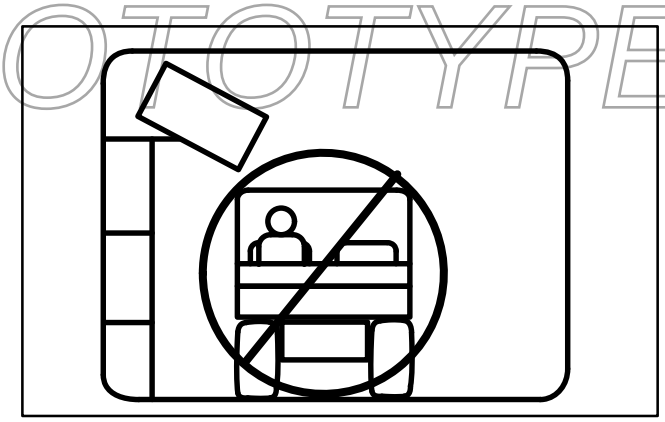

The best way to prevent accidents involving utility vehicles is through continuous supervision and training of operators and paying constant attention to the area in which vehicle is being operated.

OPERATING INSTRUCTIONS

HILLS

WARNING

Tipping or rolling the vehicle on a hill will cause serious personal injury.

- **If engine stalls or you lose headway on a hill, never attempt to turn vehicle around.**
- **Always back straight down a hill in reverse gear.**
- **Never back down in neutral or with the clutch depressed, using only the brakes.**
- **Never drive across a steep hill, always drive straight up or down.**
- **Avoid turning on a hill**
- **Don't "drop the clutch" or slam on the brakes. Sudden speed change can initiate tipover.**
- **If vehicle is to be driven through steep slopes, undulating or rough terrain, it is recommended that a optional ROPS Kit, be purchased and installed on vehicle. ROPS kit provides tip−over / roll−over protection.**

Use extra care when on hills. Never go on hills that are extremely steep. Stopping while going down a hill will take longer than on level ground. Turning while going up or down a hill is more dangerous than turning on the level. Turns while going down hill, especially with the brakes on, and, turning up hill while traversing a hill are particularly dangerous. Even at a slow speed and without a load, tip overs are more likely if you turn on a hill.

Slow down and shift into a lower gear before starting up or down a hill. If you have to turn while on a hill, do it as slowly and cautiously as possible. Never make sharp or fast turns on a hill.

If you stall or begin to lose headway while climbing a steep hill, quickly apply the brakes, shift to neutral, restart the engine and shift to reverse. At idle speed, engine and transaxle drag will aid the brakes in controlling the vehicle on the hill and help you back down the hill more safely.

Reduce the weight of the load if it is a steep hill or if the load has high center of gravity. Remember, loads can shift. Secure them.

LOADING

The weight and position of the cargo and passenger can change the vehicle center of gravity and vehicle handling. To avoid loss of control resulting in personal injury, follow these guidelines.

Do not carry loads which exceed the load limits described on the vehicle weight label.

The vehicle has several combinations of boxes, platforms, and attachments available. These can be used in various combinations that allow for maximum capacity and versatility. The full sized box is 55 inches wide by 65 inches long and can hold up to 2000 pounds of evenly distributed cargo.

Loads vary in how they are distributed. Sand spreads out evenly and quite low. Other items, such as bricks, fertilizer or landscape timbers, stack higher in the box.

The height and weight of the load has a significant influence on tip overs. The higher a load is stacked, the more likely the vehicle is to tip over. You may find that 2000 pounds stacks too high for safe operation. Reducing the total weight is one way to reduce the risk of a tip over. Distributing the load as low as possible is another way to reduce the risk of a tip over.

If the load is positioned toward one of the sides, it will make the vehicle much more likely to tip over on that side. This is especially true when turning if the load is on the outside of the turn.

Never position heavy loads behind the rear axle. If the load is positioned so far to the rear that it is behind the rear axle, it will reduce the weight on the front wheels and this will reduce steering traction. With the load all the way to the back, the front wheels can even come off of the ground when going over bumps or up a hill. This will result in a loss of steering and may lead to the vehicle tipping over.

As a general rule, position the weight of the load evenly from front to rear and evenly from side to side.

If a load is not secured, or you are transporting a liquid in a large container such as a sprayer, it can shift. This shifting happens most often while turning, going up or down hills, suddenly changing speeds or while driving over rough surfaces. Shifting loads can lead to tip overs. Always secure loads so that they do not shift. Never dump the load while the vehicle is sideways on the hill.

PROTOTYPE

Heavy loads increase stopping distance and reduce your ability to turn quickly without tipping over.

The rear cargo space is intended for load carrying purposes only, not for passengers.

TRANSPORTING VEHICLE

For moving the vehicle long distances, a trailer should be used. Make sure the vehicle is secured to the trailer. Refer to Figures 18 and 19 for location of tie down points.

TOWING VEHICLE

In case of emergency, the vehicle can be towed for a short distance. However, Toro does not recommend this as a standard procedure.

OPERATING INSTRUCTIONS

WARNING

Towing at excessive speeds could cause vehicle to lose steering control. Never tow vehicle faster than 5 MPH.

Towing the vehicle is a two person job. Affix a tow line to holes in front frame member. Move shifter to Neutral and release parking brake. If machine must be moved a considerable distance, transport it on a truck or trailer.

Note: The power steering will not function, making it difficult (increase effort) to steer.

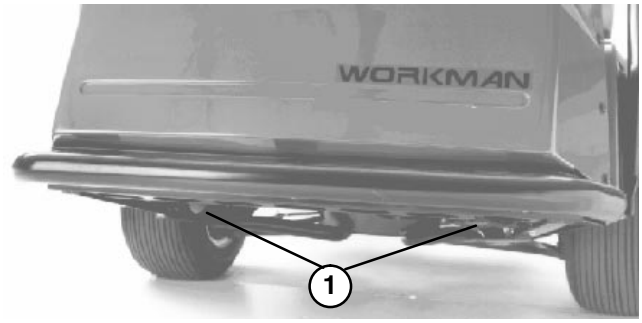

Figure 18

1. Eye holes in frame

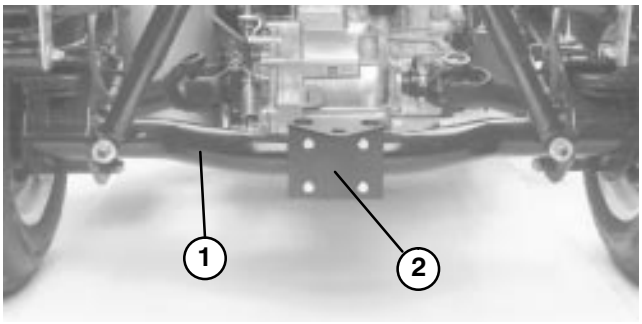

Figure 19

1. Axle tube
2. Hitch plate

TRAILER TOWING

The Workman® is capable of pulling trailers and attachments of greater weight than the vehicle itself.

Several types of tow hitches are available for the Workman, depending on your application. Contact your Authorized TORO Distributor for details.

When equipped with a tow hitch bolted onto rear axle tube, your Workman can tow trailers or attachments with a Gross Trailer Weight (GTW) up to 1500 lbs. Always load a trailer with 60% of the cargo weight in the front of the trailer. This places approximately 10% (200 lbs. max.) of the Gross Trailer Weight (GTW) on the tow hitch of the vehicle.

When towing either standard tongue or 5th wheel trailers having a Gross Trailer Weight (GTW) in excess of 1500 lbs., use either a chassis mounted draw bar hitch (rated for 3500 lb. GTW) or 5th wheel kit with brakes. Trailer brakes are required whenever a trailer over 1500 lbs. GTW is towed behind a Workman vehicle.

When hauling cargo or towing a trailer (attachment), do not overload your vehicle or trailer. Overloading can cause poor performance or damage to the brakes, axle, engine, transaxle, steering, suspension, body structure or tires.

Important: To reduce potential for drive line damage, use low range.

When towing 5th wheel attachments, like a fairway aerator, always install the ”wheely bar”(included with the 5th wheel kit) to prevent the front wheels from lifting off the ground if the towed attachments movement is suddenly impaired.

PROTOTYPE

SERVICE INTERVAL CHART

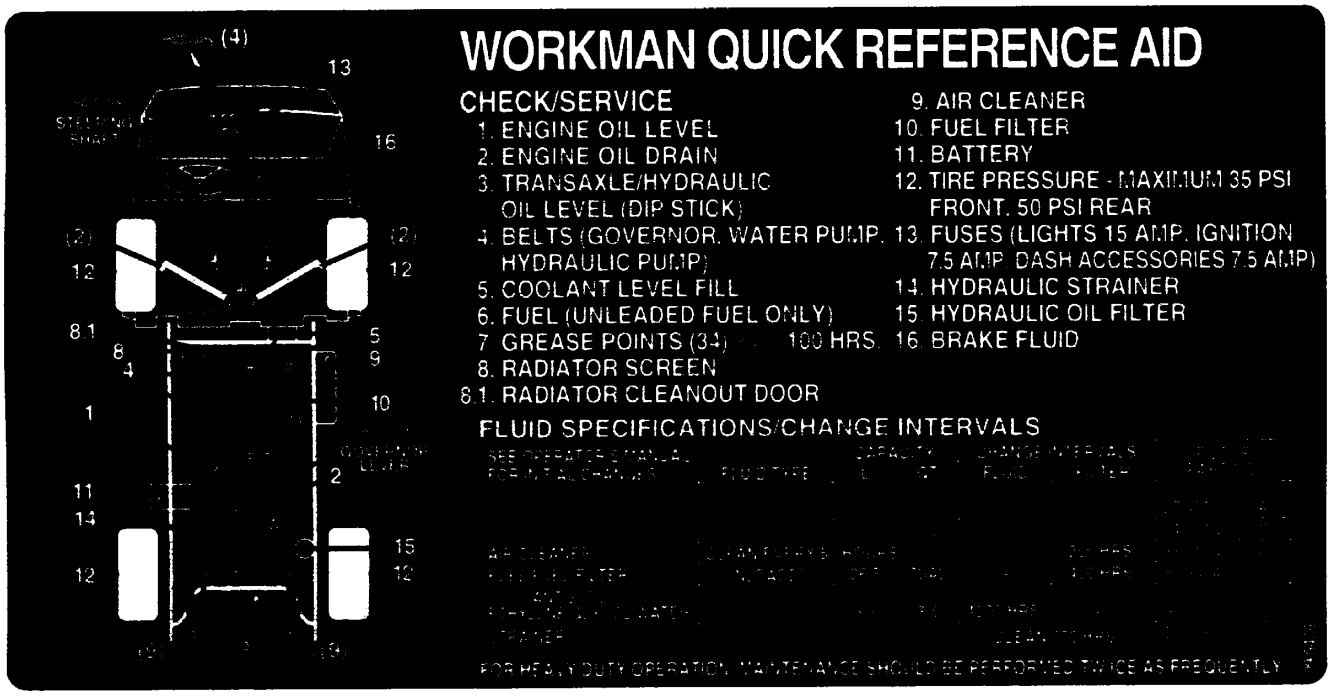

PROTOTYPE

LUBRICATION

WARNING

Before servicing or making adjustments to the machine, stop engine, set parking brake and remove key from ignition switch. Any load material must be removed from bed or other attachment before working under raised bed. Always rotate safety support to the down position before working under raised bed.

GREASING BEARINGS AND BUSHINGS

(Fig. 20–25)

The vehicle has grease fittings that must be lubricated regularly with No. 2 General Purpose Lithium Base Grease. If machine is operated under normal conditions, lubricate all bearings and bushings after every 100 hours of operation. More frequent lubrication is required if used for heavy duty vehicle operations.

The grease fitting locations and quantities are: Tie rod ends (4) (Fig. 20), Front ball joints (4) (Fig. 20), Rear drive shafts (18) (Fig. 21), Pedal Pivots (4) (Fig. 22); Steering shaft (1) (Fig. 23), Front pivot bushings (2) (Fig. 24) and Governor Lever (1) (Fig. 25).

IMPORTANT: When greasing drive shaft universal shaft bearing crosses, pump grease until it comes out of all 4 cups at each cross.

1. Wipe grease fitting clean so foreign matter cannot be forced into the bearing or bushing.

2. Pump grease into the bearing or bushing.

3. Wipe off excess grease.

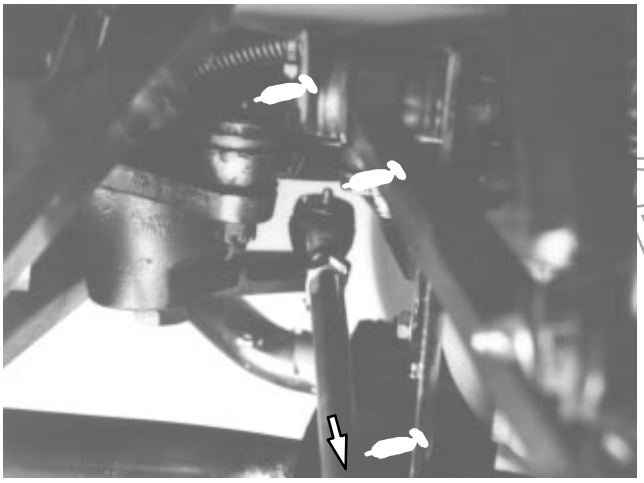

Figure 20

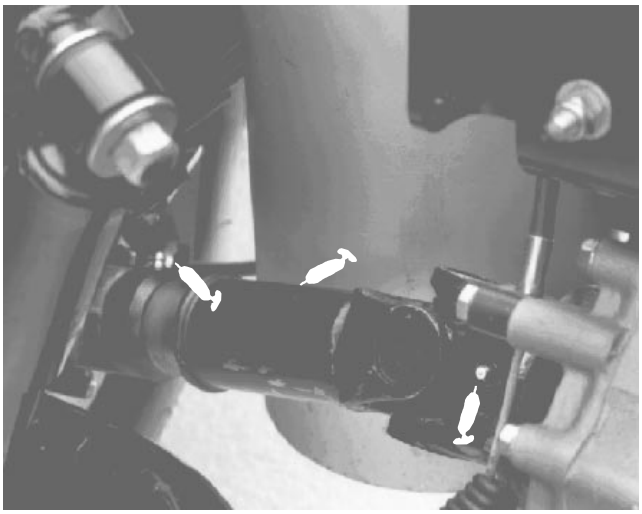

Figure 21

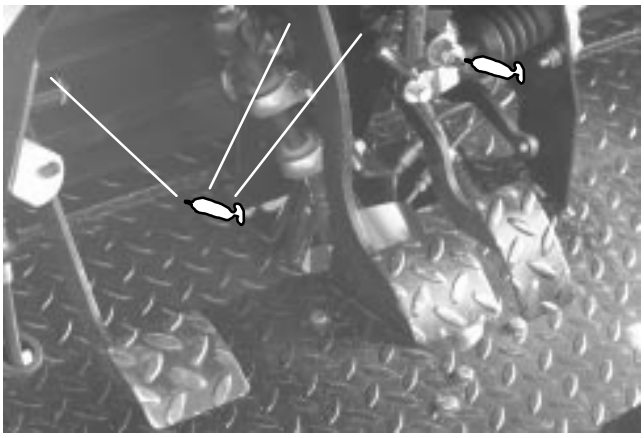

Figure 22



Figure 23

PROTOTYPE

LUBRICATION



Figure 24

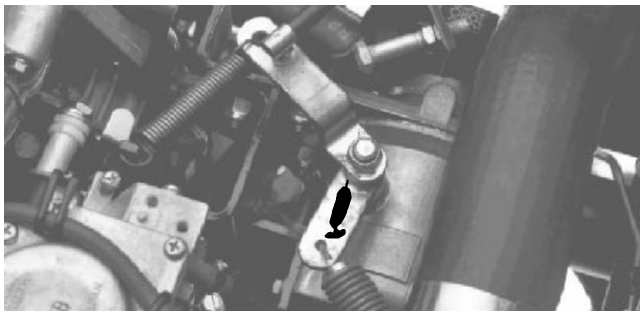

Figure 25

PROTOTYPE

MAINTENANCE CHART AND CHECKLIST

Daily Maintenance: (duplicate this page for routine use)
Check proper section of Operator's Manual for fluid specifications

Maintenance Check Item ➧	**Daily Maintenance Check For Week Of _____**						
	MON	TUES	WED	THURS	FRI	SAT	SUN
✓ Safety Interlock Operation							
✓ Service & Park Brake Operation							
✓ Fuel Level							
✓ Accelerator Operation							
✓ Clutch & Shifter Operation							
✓ Engine Oil Level							
✓ Transaxle Oil Level							
✓ Cooling System Fluid Level[1]							
✓ Brake Fluid Level							
✓ Air Cleaner[2]							
✓ Unusual Engine Noises							
✓ Unusual Operating Noises							
✓ Radiator Screen/Clean out Door[2]							
✓ Hydraulic Hoses for Damage							
✓ Fluid Leaks							
✓ Instrument Operation							
Lubricate All Grease Fittings[3]							
Touch–up Damaged Paint							

[1] = Inspect at Overflow Tank
[2] = More often when conditions are dirty
[3] = Immediately <u>after every</u> washing, regardless of the interval listed.

Notation for areas of concern: Inspection performed by_____

Item	Date	Information
1		
2		
3		
4		
5		
6		
7		
8		

PROTOTYPE

MAINTENANCE

IMPORTANT

Heavy Duty Operation

If vehicle is subjected to conditions listed below, maintenance should be performed twice as frequently.

- **Desert operation**
- **Cold climate operation (below 32°F)**
- **Trailer or 5th wheel towing**
- **Frequent operation on dusty roads**
- **Frequent operation under maximum vehicle gross weight**
- **Construction work**
- **After extended operation in mud, sand, water or similar dirty conditions, have your brakes inspected and cleaned and drive axle joints greased as soon as possible. This will prevent any abrasive material from causing excessive wear.**
- **Under frequent heavy duty operating conditions, lubricate all grease fittings and inspect air cleaner daily to prevent excessive wear.**

CAUTION

Service of propane fuel systems may require certification or special training. Check with local and state codes before performing any maintenance or service.

CAUTION

Only qualified and authorized personnel shall be permitted to maintain, repair, adjust or inspect the vehicle.

Avoid fire hazards and have fire protection equipment present in the work area. Do not use an open flame to check level or leakage of fuel, battery electrolyte or coolant. Do not use open pans of fuel or flammable cleaning fluids for cleaning parts.

Many of the subjects covered in this maintenance section require raising and lowering the bed. The following precautions must be taken or serious injury or death could result.

WARNING

Before servicing or making adjustments to the machine, stop engine, set parking brake and remove key from ignition switch. Any load material must be removed from bed or other attachment before working under raised bed. Never work under a raised bed without positioning safety support under bed.

PROTOTYPE

After maintenance is completed, remove safety support, slide it onto storage stud and lower bed.

MAINTENANCE

JACKING VEHICLE (Fig. 26 & 27)

1. Do not start engine while vehicle is on jack, because engine vibration or wheel movement could cause vehicle to slip off jack.

2. Do not work under vehicle without jack stands supporting it. The vehicle could slip off jack, injuring any one beneath it.

3. The jacking point at the front of the vehicle is under the front center frame support and at the rear it is under the axle tube.

4. When jacking up front of vehicle, always place a 2x4 block (or similar material) between jack and vehicle frame.

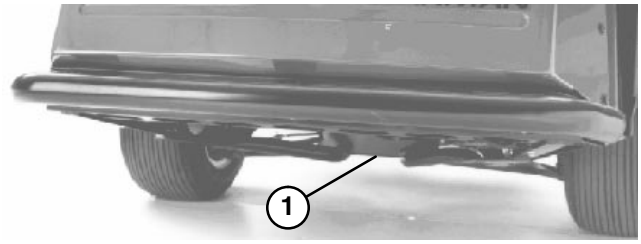

Figure 26
1. Front jacking point

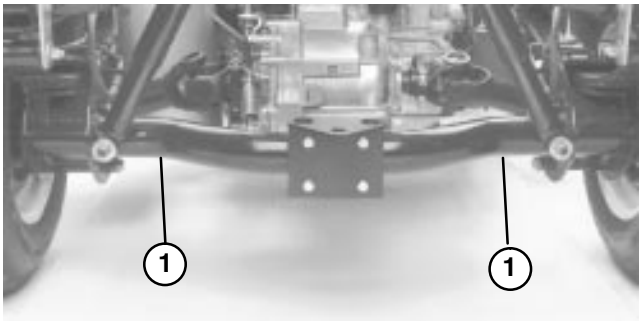

Figure 27
1. Rear jacking points

GENERAL AIR CLEANER MAINTENANCE PRACTICES (Fig. 28)

Inspect air cleaner and hoses periodically to maintain maximum engine protection and to ensure maximum service life.

1. Check air cleaner body for damage which could possibly cause an air leak. Replace a damaged air cleaner body.

2. Clean the air cleaner filter every50 hours and change every 200 hours (more frequently in extreme dusty or dirty conditions).

SERVICING AIR CLEANER

1. Release latches securing air cleaner cover to air cleaner body. Separate cover from body. Clean inside of air cleaner cover.

2. Gently slide filter out of air cleaner body to reduce the amount of dust dislodged. Avoid knocking filter against air cleaner body.

3. Inspect filter and discard if damaged. Do not wash or reuse a damaged filter. Clean the filter as follows:

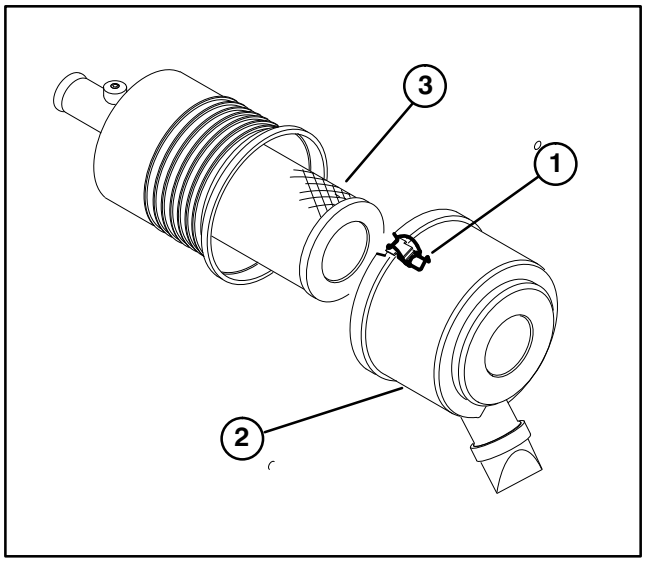

Figure 28
1. Air cleaner latches
2. Dust cup
3. Filter

Washing Method

A. Prepare a solution of filter cleaner and water and soak filter element about 15 minutes. Refer to directions on filter cleaner carton for complete information.

B. After soaking filter for 15 minutes, rinse it with clear water. Maximum water pressure must not exceed 40 psi to prevent damage to the filter element. Rinse filter from clean side to dirty to side.

C. Dry filter element using warm, flowing air (160°F) max), or allow element to air−dry. Do not use a light bulb to dry the filter element because damage could result.

Compressed Air Method

A. Blow compressed air from inside to the outside of dry filter element. Do not exceed 100 psi to prevent damage to the element.

B. Keep air hose nozzle at least 2” from filter and move nozzle up and down while rotating the filter element. Inspect for holes and tears by looking through the filter toward a bright light.

5. Inspect new filter for shipping damage. Check sealing end of filter. Do not install a damaged filter.

6. Insert new filter properly into air cleaner body. Make sure filter is sealed properly by applying pressure to outer rim of filter when installing. Do not press on flexible center of filter.

7. Reinstall cover and secure latches.

PROTOTYPE

CHANGING ENGINE OIL AND FILTER

(Fig. 29 & 30)

Change oil and filter initially after the first 50 hours of operation, thereafter, change oil and filter every 100 hours.

1. Raise bed (if so equipped) and place safety support under t to hold up bed.

2. Remove drain plug and let oil flow into drain pan. When oil stops, install drain plug.

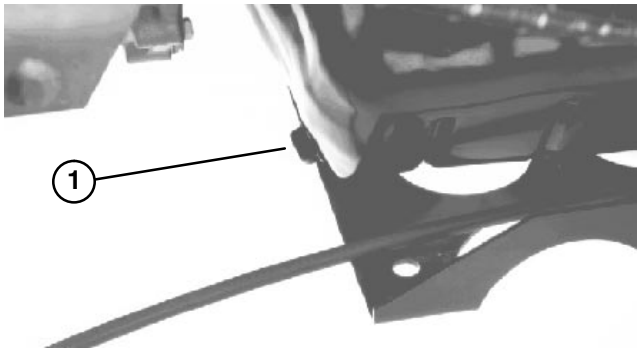

Figure 29
1. Engine Oil Drain Plug

3. Remove oil filter. Apply a light coat of clean oil to the new filter seal before screwing it on. Screw filter on until gasket contacts mounting plate, then tighten 1/2 to 2/3 of a turn. DO NOT OVER−TIGHTEN.

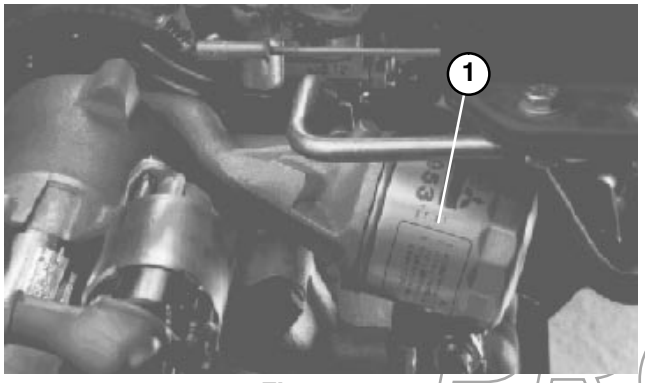

Figure 30
1. Engine Oil Filter

4. Add oil to crankcase, refer to Check Engine Oil.

FUEL SYSTEM (Fig. 31−32)

Fuel Lines and Connections

Check lines and connections every 600 hours or yearly, whichever comes first. Inspect for deterioration, damage, or loose connections.

Lock off Filter

Replace lock−off filter after every 600 hours of operation.

1. Raise bed (if so equipped) and place a safety support under it to hold up bed.

2. Remove fasteners securing cover of vacuum fuel lock to fuel lock base.

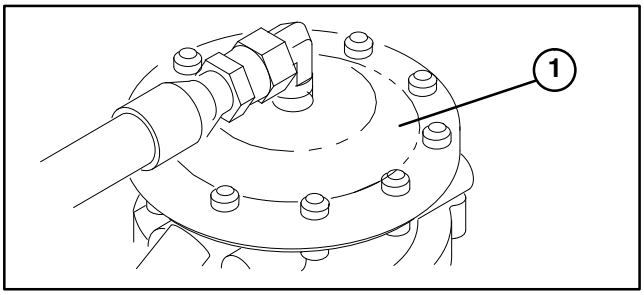

Figure 31
1. Cover

3. Remove filter from fuel lock base.

4. Replace filter and install cover

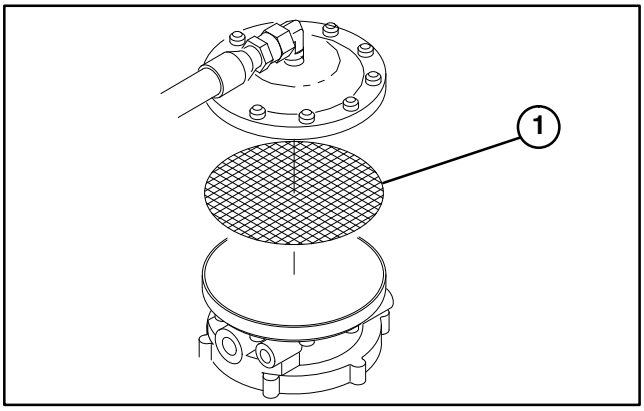

Figure 32
1. Filter

REMOVING DEBRIS FROM ENGINE COOLING SYSTEM

Remove debris from engine area and radiator daily, clean more frequently in dirty conditions.

1. Turn engine off. Clean engine area thoroughly of all debris.

2. Clean radiator thoroughly with water or compressed air.

PROTOTYPE

CHANGING ENGINE COOLANT (Fig. 33)

1. Park machine on a level surface.

2. Raise bed (if so equipped) and place a safety support under it to hold up bed.

CAUTION

If engine has been running, pressurized hot coolant can escape if radiator cap is removed and cause burns. Allow engine to cool at least 15 minutes or until the radiator cap is cool enough to touch without burning hand.

3. Remove radiator and reserve tank caps.

4. Open coolant drain cock at bottom of radiator and allow coolant to flow into drain pan. When coolant stops, close drain cock.

5. Remove coolant drain plug from engine and allow coolant to flow into drain pan. When coolant stops, install drain plug.

6. Slowly fill radiator with a 50/50 mixture of water and permanent ethylene glycol anti−freeze. Install radiator cap.

7. Slowly fill reserve tank until level reaches COLD line. **DO NOT OVERFILL**. Install reserve tank cap.

8. Start engine and operate until warm. Recheck level and replenish, if required.

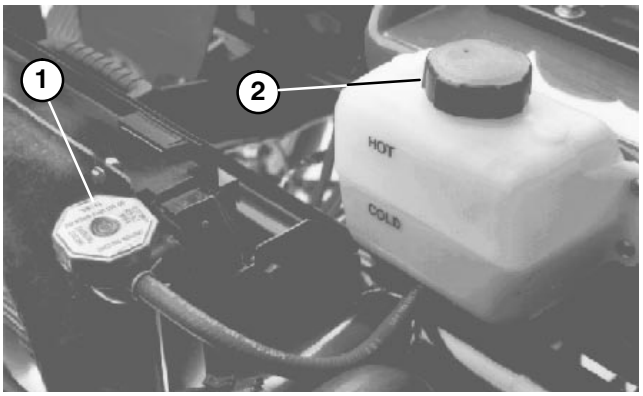

Figure 33
1. Radiator cap
2. Reserve tank cap

ADJUSTING BELTS (Fig. 34−35)

Check condition and tension of all belts after first day of operation and every 200 operating hours thereafter. Raise bed (if so equipped) and position safety support on extended lift cylinder to hold up bed.

Governor belt (Fig. 34)

1. Check tension by depressing belt at mid span of governor and crankshaft pulleys with 22 lbs. of force. A new belt should deflect .52−.62 in. A used belt should deflect .62−.72 in. If deflection is incorrect, proceed to next step. If correct, continue operation.

2. To adjust belt tension:

A. Loosen idler pulley mounting nut, move pulley to increase tension and tighten nut.

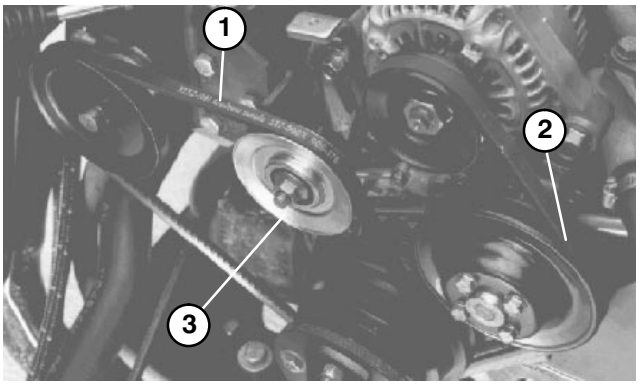

Figure 34
1. Governor belt
2. Alternator belt
3. Idler pulley

Alternator belt (Fig. 34)

1. Check tension by depressing belt at mid span of crankshaft and alternator pulleys with 22 lbs. of force. A new belt should deflect .3−.5 in. A used belt should deflect .4−.55 in. If deflection is incorrect, proceed to next step. If correct, continue operation.

2. To adjust belt tension:

A. Loosen (2) alternator mounting bolts.

B. Using a bar, rotate alternator until proper belt tension is attained, then tighten mounting bolts.

Fan belt (Fig. 35)

1. Check tension by depressing belt at mid span of fan and drive shaft pulleys with 22 lbs. of force. A new belt should deflect .48−.58 in. A used belt should deflect .55−.65 in. If deflection is incorrect, proceed to next step. If correct, continue operation.

2. To adjust belt tension:

A. Loosen idler pulley mounting nut, move pulley to increase tension and tighten nut.

PROTOTYPE

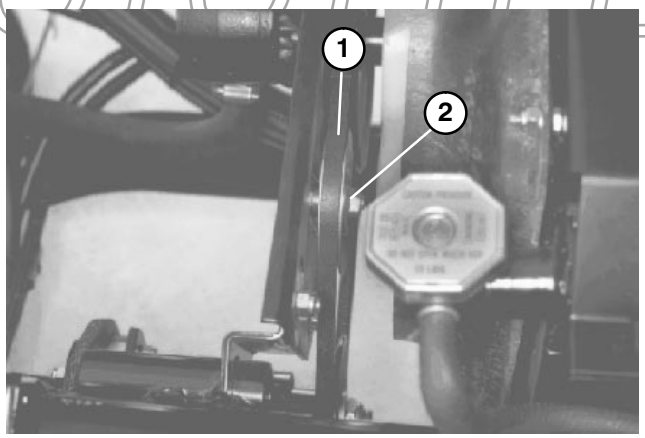

Figure 35
1. Fan belt
2. Idler pulley

CHECKING OIL LEVEL IN GOVERNOR (Fig. 36)

Check oil level in governor after every 100 hours of operation.

1. Position vehicle on level surface, stop engine and engage the parking brake.

2. Raise box (if so equipped) and place a safety support under it to hold up bed.

3. Clean area around check plug on governor.

4. Remove check plug from governor. Oil level must be up to bottom of hole. If oil level is low, remove oil fill plug and add same oil that is being used in engine. When oil is at point of overflowing out of check plug hole, install the check plug and fill plug.

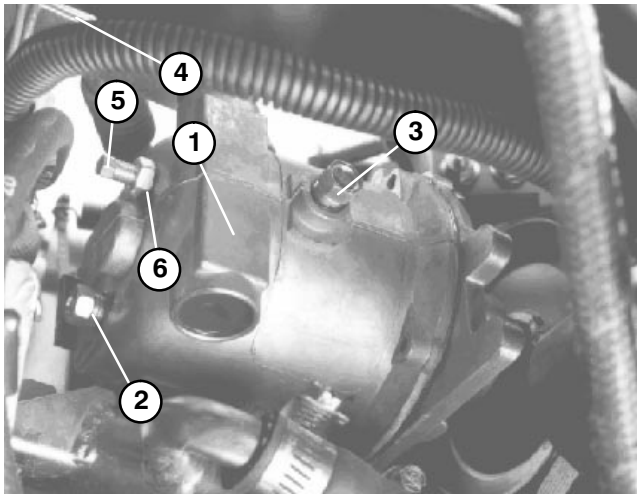

Figure 36

1. Governor
2. Check plug
3. Fill plug (On top)
4. Governor output lever
5. Surge screw
6. Locknut

ADJUSTING ACCELERATOR PEDAL (Fig. 37)

1. Position vehicle on level surface, stop engine and engage the parking brake.

2. Adjust ball joint on accelerator cable to allow .200"– .350" of clearance between accelerator pedal arm and top of diamond tread floor plate, when a 20 lb. force is applied to center of pedal. Tighten locknut.

Note: Engine must not be running and return spring must be attached.

WARNING

Governor is preset at the factory to a maximum engine speed of 3650 rpm. If speed is not correct, contact your authorized Toro Dealer/Distributor.

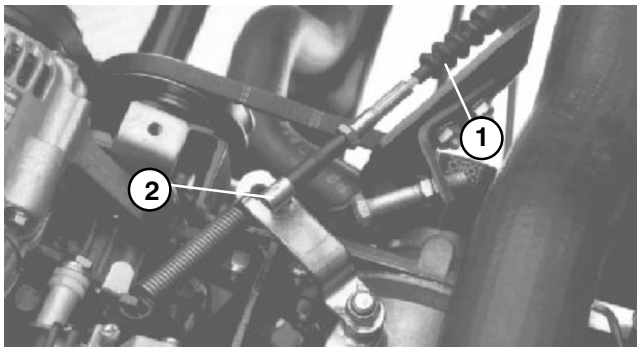

Figure 37

1. Accelerator cable
2.. Ball joint

CHANGING TRANSAXLE / HYDRAULIC FLUID (Fig. 38)

Change Transaxle hydraulic fluid, filter and clean strainer every 800 hours.

1. Position the vehicle on a level surface, stop engine, engage the parking brake and remove key from ignition switch.

2. Remove drain plug from side of reservoir and let hydraulic fluid flow into drain pan. Reinstall and tighten plug when hydraulic fluid stops draining.

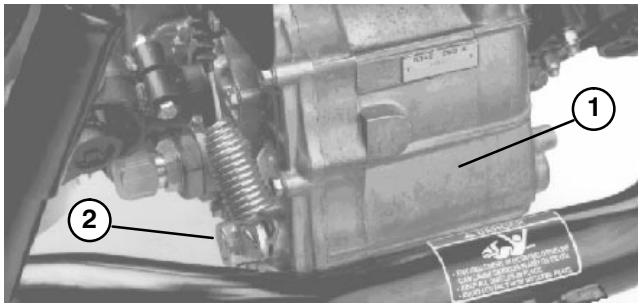

Figure 38

1. Hydraulic Reservoir
2. Drain plug

3. Fill reservoir with approximately 7.5 qt. of Dexron III ATF. Refer to Checking Hydraulic Fluid.

4. Start engine and operate to fill hydraulic system. Recheck oil level and replenish, if required.

PROTOTYPE

IMPORTANT: Use only hydraulic fluids specified. Other fluids could cause system damage.

REPLACING HYDRAULIC FILTER (Fig. 39)

Initially, replace the hydraulic filter after 10 operating hours, thereafter, replace filter every 800 hours.

Use the Toro replacement filter (Part No. 54–0110).

IMPORTANT: Use of any other filter may void the warranty on some components.

1. Position vehicle on a level surface, stop engine, engage the parking brake and remove key from ignition switch.

2. Clean area around filter mounting area. Place drain pan under filter and remove filter.

3. Lubricate new filter gasket.

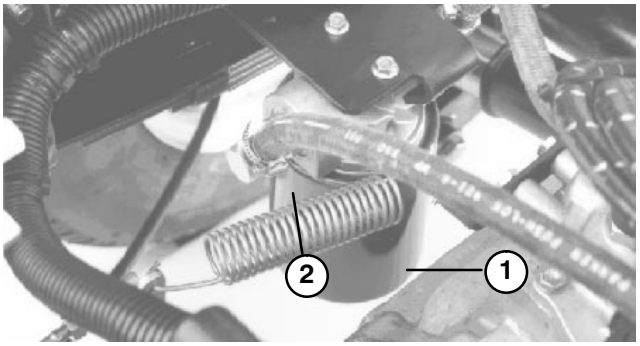

Figure 39
1. Hydraulic Filter
2. Gasket

4. Assure filter mounting area is clean. Screw filter on until gasket contacts mounting plate. Then tighten filter one−half turn.

5. Start engine and let run for about two minutes to purge air from the system. Stop the engine and check the hydraulic oil level and for leaks.

CLEANING HYDRAULIC STRAINER (Fig. 40)

Clean hydraulic strainer every 800 hours.

1. Position the vehicle on a level surface, stop engine, engage the parking brake and remove key from ignition switch.

2. Remove drain plug (Fig. 38) from side of reservoir and let hydraulic fluid flow into drain pan.

3. Note orientation of hydraulic hose and 90° fitting connected to strainer on side of reservoir. Remove hydraulic hose and 90° fitting.

4. Remove strainer and clean by back flushing with a clean degreaser. Allow to air dry before reinstalling.

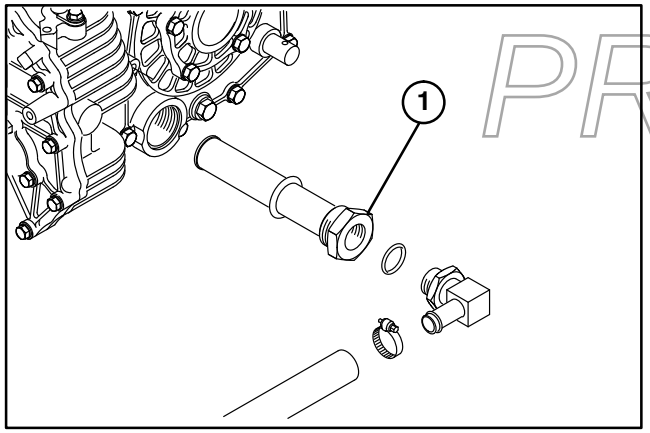

Figure 40
1. Hydraulic strainer

5. Reinstall strainer.

6. Reinstall hydraulic hose and 90° fitting to strainer in same orientation.

7. Reinstall and tighten drain plug.

8. Fill reservoir with approximately 7.5 qt. of Dexron III ATF. Refer to Checking Hydraulic Fluid.

REPLACING SPARK PLUGS (Fig. 41)

Replace spark plugs after every 400 operating hours to assure proper engine performance and reduce exhaust emission level.

Correct spark plug to use is a Champion RN 14YC or NGK BPR 4ES.

Recommended air gap is .030".

Note: The spark plug usually lasts a long time; however, the plug should be removed and checked whenever the engine malfunctions.

1. Clean area around spark plugs so foreign matter cannot fall into cylinder when spark plug is removed.

2. Pull spark plug wires off spark plugs and remove plugs from cylinder head.

3. Check condition of side electrode, center electrode, and center electrode insulator to assure there is no damage.

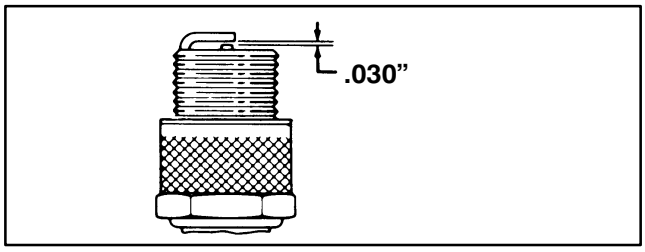

Figure 41

IMPORTANT: A cracked, fouled, dirty or otherwise malfunctioning spark plug must be replaced. Do not sand blast, scrape, or clean electrodes by using a wire brush because grit may eventually release from the plug and fall into the cylinder. The result is usually a damaged engine.

PROTOTYPE

4. Set air gap between center and side of electrodes at .040". Install correctly gapped spark plug and tighten plug to 15−20 ft−lb. If torque wrench is not used, tighten plug firmly.

5. Install spark plug wires.

ADJUSTING BRAKE PEDAL (Fig. 42−43)

Check adjustment every 200 hours.

1. Loosen jam nut on link rod ball joint.

2. Rotate rod until gap between brake pedal and up stop is .020−.080".

3. Tighten jam nut after adjustment has been attained.

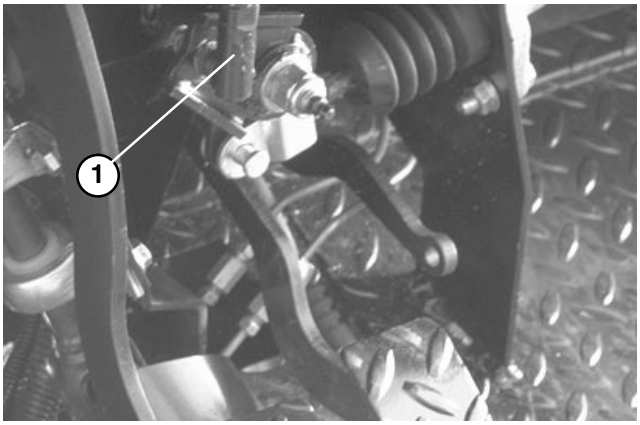

Figure 42
1. Link rod ball joint

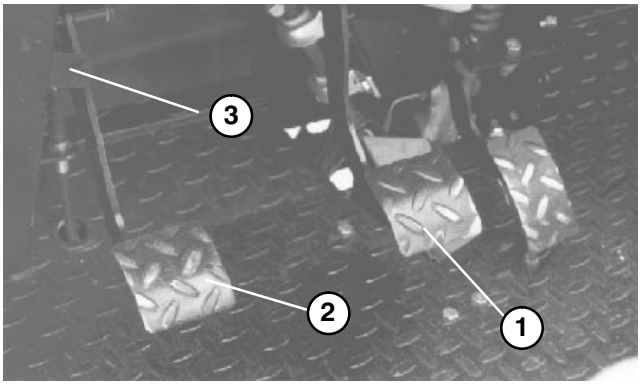

Figure 43
1. Brake pedal
2. Clutch pedal
3. Clutch pedal upstop

ADJUSTING CLUTCH PEDAL (Fig. 44–45)

Check adjustment every 200 hours.

1. Loosen jam nuts securing clutch cable to bracket on bell housing.

Note: Ball joint may be removed and rotated, if additional adjustment is required.

2. Disconnect return spring from clutch lever.

3. Adjust jam nuts/or ball joint until bottom rear edge of clutch pedal is 3.75" ± .12" from top of floor plate diamond pattern, when an 4 lb. force is applied to pedal.

Note: Force is applied so release bearing lightly contacts pressure plate fingers.

4. Reconnect return spring to clutch lever.

5. Verify that rear edge of clutch pedal is 5.5" ± .12" from top of floor plate diamond pattern. If dimension is not attained, adjust clutch pedal upstop.

Note: The clutch free play should never be less than .75".

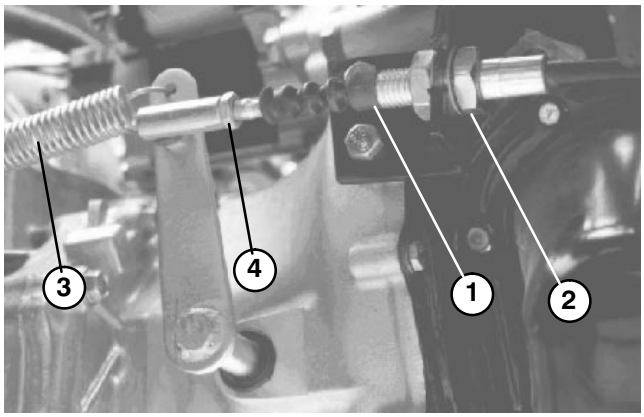

Figure 44
1. Clutch cable
2. Jam nuts
3. Return spring
4. Ball joint

6. Tighten jam nuts after adjustment has been attained.

7. Recheck clutch safety switch adjustment (Fig. 45). Engine must not crank unless clutch pedal is 1.25" ±.12" from floor. If an adjustment is required, loosen switch jam nuts and adjust up or down.

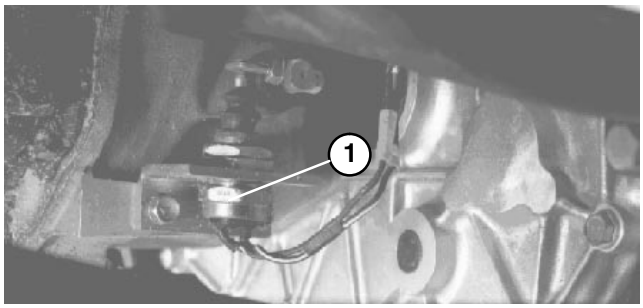

Figure 45
1. Clutch switch

ADJUSTING PARKING BRAKE (Fig. 46)

Check adjustment every 200 hours.

1. Loosen set screw securing knob to parking brake lever.

PROTOTYPE

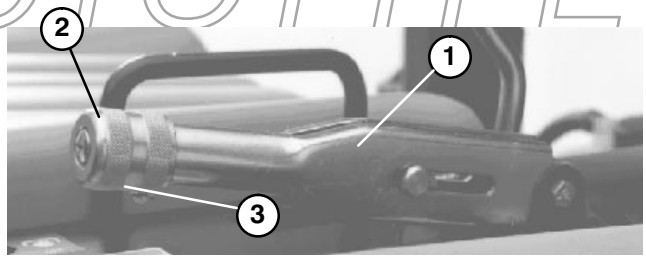

Figure 46
1. Parking brake lever
2 Knob
3. Set screw

2. Rotate knob until a force of 55–65 lbs. is required to actuate lever.

3. Tighten set screw after adjustment has been attained.

MAINTENANCE

ADJUSTING SHIFT CABLES

Check adjustment every 200 hours.

1. Move shift lever to Neutral position.

2. Remove clevis pins securing shift cables to transaxle shift arms.

3. Loosen clevis jam nuts and adjust each clevis so cable free play is equal forward and backward relative to hole in transaxle shift arm (With transaxle lever free play taken up in same direction).

4. Reinstall clevis pins and tighten jam nuts after adjustments have been attained.

INSPECT BRAKES

Visually inspect brakes for worn brake shoes after every 600 hours of operation.

INSPECT TIRES

Check tire condition at least every 200 hours of operation. Operating accidents, such as hitting curbs, can damage a tire or rim and also disrupt wheel alignment, so inspect tire condition after an accident.

FRONT WHEEL TOE−IN (Fig. 47−48)

After every 400 operating hours or annually, check front wheel toe−in.

1. Measure center−to−center distance (at axle height) at front and rear of steering tires. Front measurement must be equal to the rear measurement ±1/8 in..

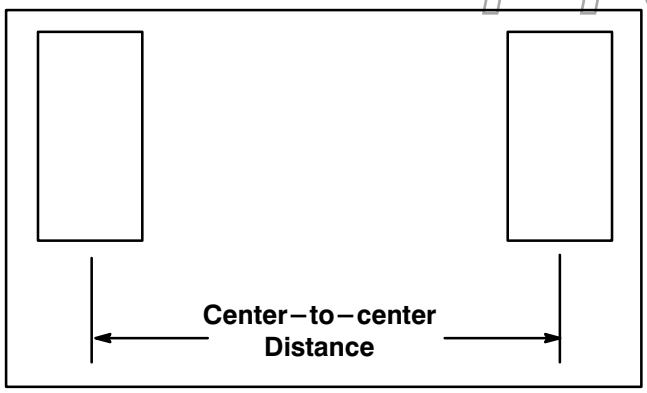

Figure 47

2. To adjust**,** loosen jam nuts at both ends of tie rod.

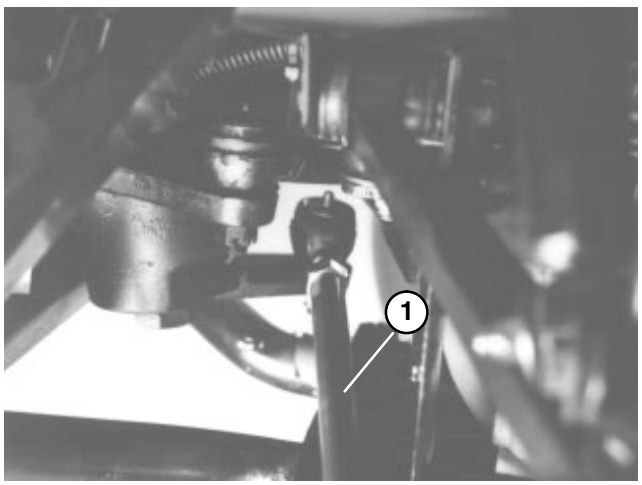

Figure 48
1. Tie rod

3. Rotate tie rod to move front of tire inward or outward.

4. Tighten tie rod jam nuts when adjustment is correct.

FUSES (Fig. 49)

There are 3 fuses in the machine's electrical system. They are located under right side of dash panel.

FUSES	
OPEN	−−
LIGHTS & HORN	15A
DASH	7.5A
IGNITION	7.5A

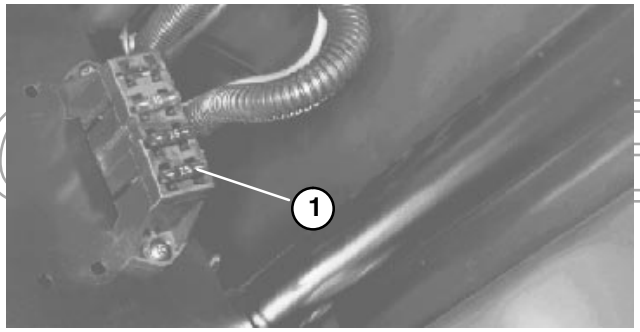

Figure 49
1. Fuse block

JUMP STARTING PROCEDURE

1. Loosen knobs securing battery cover to battery base and slide cover off.

2. Connect a jumper cable between the positive posts of the two batteries. The positive post may be identified by a "+" sign on top of battery cover.

PRO

WARNING

Jump starting can be dangerous. To avoid personal injury or damage to electrical components in vehicle, observe the following warnings:

- **Never jump start with a voltage sources greater than 15 volts D.C. This will damage the electrical system.**
- **Never attempt to jump start a discharged battery that is frozen. It could rupture or explode during jump starting.**
- **Observe all battery warnings while jump starting your vehicle.**
- **Be sure your vehicle is not touching the jump start vehicle.**
- **Connecting cables to the wrong post could result in personal injury and/or damage to the electrical system.**

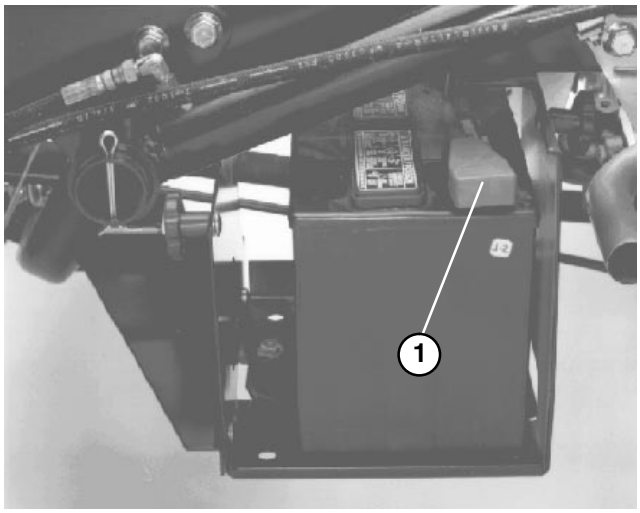

Figure 50

1. Positive (+) cable

3. Connect one end of the other jumper cable to the negative terminal of the battery in the other vehicle. The negative terminal has “NEG” on the battery cover. Do not connect the other end of the the jumper cable to the negative post of the discharged battery. Connect it to the engine. Do not connect the jumper cable to the fuel system.

4. Start the engine in the vehicle providing the jump start. Let it run a few minutes, then start your engine.

5. Remove the negative jumper cable first from your engine, then the battery in the other vehicle.

6. Reinstall battery cover to battery base and tighten knobs.

BATTERY STORAGE

If the machine will be stored for more than 30 days, remove the battery and charge it fully. Either store it on the shelf or on the machine. Leave the cables disconnected if stored on the machine. Store the battery in a cool atmosphere to avoid quick deterioration of the charge in the battery. To prevent battery from freezing, make sure it is fully charged. The specific gravity of a fully charged battery is 1.250.

BATTERY CARE

1. Battery electrolyte level must be properly maintained and the top of the battery kept clean. If the machine is stored in a location where temperatures are extremely high, the battery will run down more rapidly than if the machine is stored in a location where temperatures are cool.

2. Keep top of battery clean by washing periodically with a brush dipped in ammonia or bicarbonate of soda solution. Flush the top surface with water after cleaning. Do not remove the fill cap while cleaning.

3. Battery cables must be tight on terminals to provide good electrical contact.

4. If corrosion occurs at terminals,remove battery cover, disconnect cables, negative (−) cable first and scrape clamps and terminals separately. Reconnect cables, positive (+) cable first and coat terminals with petroleum jelly.

5. Check the electrolyte level every 50 operating hours or, if machine is in storage, every 30 days.

6. Maintain cell level with distilled or demineralized water. Do not fill cells above the bottom of the fill ring inside each cell.

CAUTION

Wear safety goggles and rubber gloves when working with electrolyte. Charge the battery in a well ventilated place so gasses produced while charging can dissipate. Since the gases are explosive, keep open flames and electrical spark away from the battery; do not smoke. Nausea may result if the gases are inhaled. Unplug charger from electrical outlet before connecting to or disconnecting charger leads from battery posts.

PROTOTYPE

MAINTENANCE SCHEDULE

Minimum Recommended Maintenance Intervals

Maintenance Procedure	Maintenance Interval & Service

	Every 50hrs	Every 100hrs	Every 200hrs	Every 400hrs	Every 800hrs
Check Battery Fluid Level	●	●	●	●	●
Check Battery Cable Connections	●	●	●	●	●
Clean Air Cleaner	●	●	●	●	●
Lubricate All Grease Fittings		●	●	●	●
Inspect Condition and Wear of Tires		●	●	●	●
‡ Change Engine Oil and Filter		●	●	●	●
Inspect Cooling System Hoses		●	●	●	●
Check Governor Oil Level		●	●	●	●
† Check Cable Adjustments			●	●	●
Check Alternator, Governor and Fan Belts			●	●	●
Change Air Cleaner Filter			●	●	●
Check Engine RPM (idle and full throttle)			●	●	●
† Torque Wheel Lug Nuts			●	●	●
Check Front Wheel Alignment				●	●
Inspect Service and Parking Brakes				●	●
Inspect Fuel Lines				●	●
Replace Fuel Lock Filter				●	●
Adjust Valves				●	●
Replace Spark Plugs and Check Timing				●	●
† Replace Transaxle Filter					●
Change Transaxle Oil					●
Clean Transaxle Strainer					●
Pack Front Wheel Bearings					●

† Initial break in at 10 hours

‡ Initial break in at 50 hours

Replace all Interlock Switches	**Annual Recommendations:**
Coolant System – Flush/Replace Fluid	*Replace switches, Coolant and Brake Fluid every 1200 hours or 2 years, whichever occurs first.*
Change Brake Fluid	*Replace Engine Timing Belt every 2000 hours or 2 years, whichever occurs first.*
Replace Timing Belt	

PROTOTYPE

HYDRAULIC SCHEMATIC

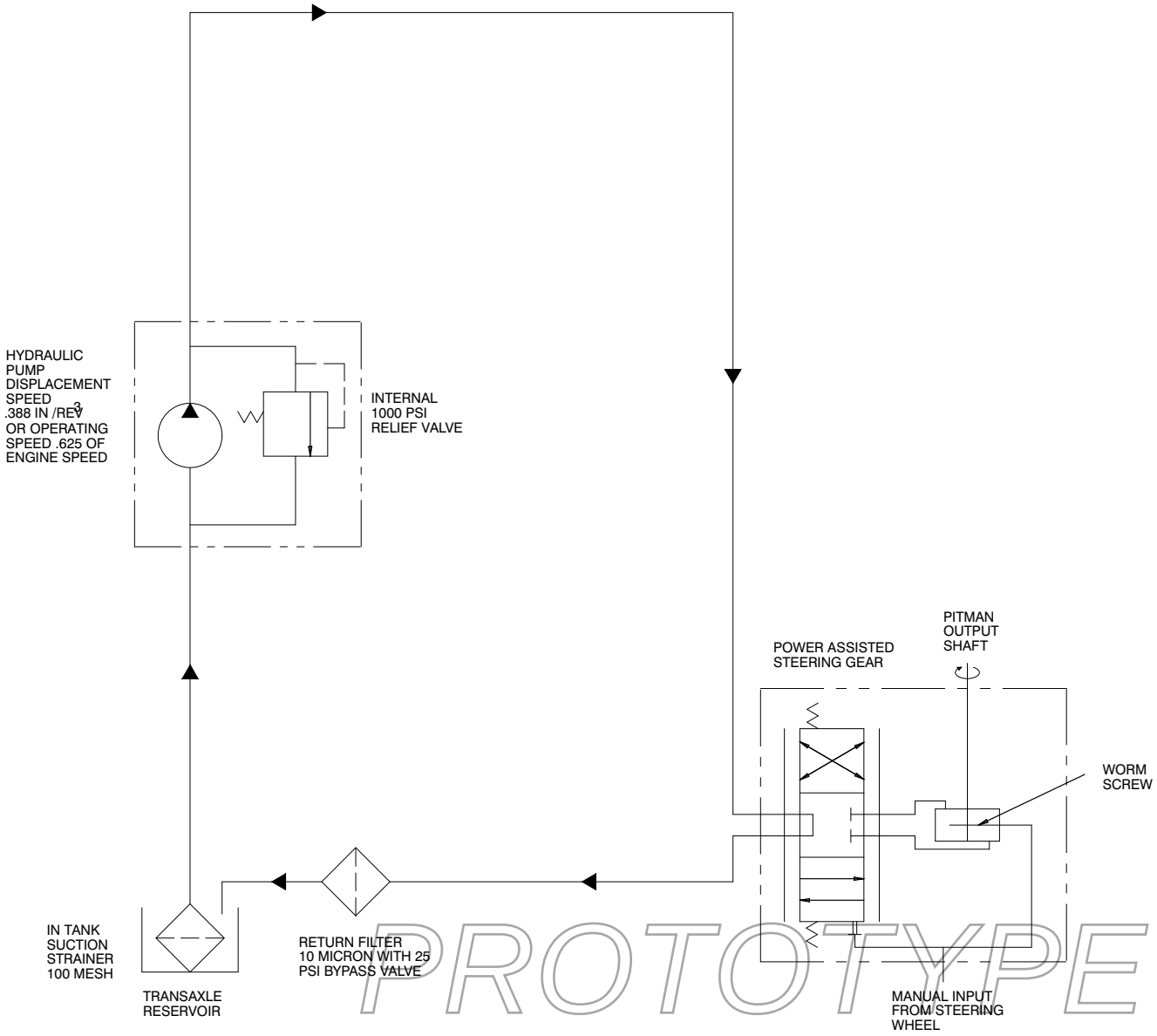

PROTOTYPE

T–3016–1
TORO.99.1051

ELECTRICAL SCHEMATIC

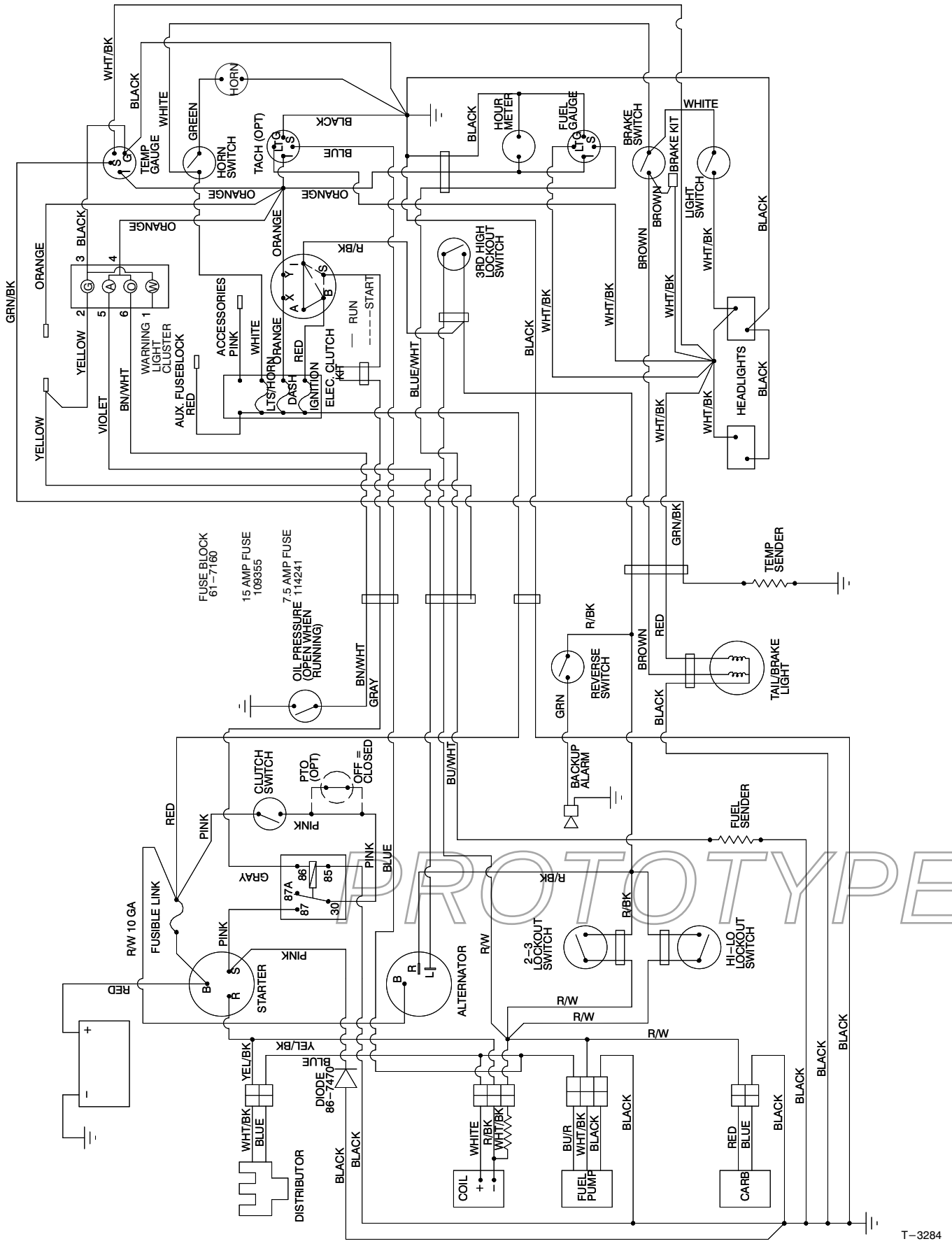

IDENTIFICATION AND ORDERING

MODEL AND SERIAL NUMBERS

The WORKMAN® has two identification numbers: a model number and a serial number. These numbers are stamped into a plate located on the right frame member under dash. In any correspondence concerning the unit, supply the model and serial numbers to ensure correct information and replacement parts are obtained.

Note: Do not order by reference number if a parts catalog is being used; use the part number.

To order replacement parts from an authorized TORO Distributor, supply the following information:

1. Model and serial numbers.

2. Part number, description, and quantity of parts desired.

PROTOTYPE

NOTES

PROTOTYPE

NOTES

PROTOTYPE

The Toro Industrial Products One Year Limited Warranty

The Toro Company warrants your Toro Industrial Product ("Product") to be free from defects in materials or workmanship for the period of time listed below. Where a warrantable condition exists, Toro will repair the Product at no cost to you including diagnosis, labor, parts, and transportation. This warranty begins on the date the Product is delivered to the original retail purchaser.

Warranty Duration: One year or 1500 operational hours*, whichever occurs first.
***Product equipped with hour meter**

Owner Responsibilities:

As the Product owner, you are responsible for required maintenance and adjustments stated in your Owner's Manual. Failure to perform required maintenance and adjustments can be grounds for disallowing a warranty claim.

Instructions for Obtaining Warranty Service:

You are responsible for notifying the Industrial Products Distributor or Authorized Industrial Products Dealer from whom you purchased the Product as soon as you believe a warrantable condition exists.

If you need help locating a Industrial Products Distributor or Authorized Dealer, or if you have questions regarding your warranty rights or responsibilities, you may contact us at:

Toro Commercial Products Service Department
8111 Lyndale Avenue South
Minneapolis, MN, 55420−1196
Telephone: (612) 888−8801
Facsimile: (612) 887−8258
E−Mail: Commercial.Service@Toro.Com

Maintenance Parts:

Parts scheduled for replacement as required maintenance ("Maintenance Parts"), are warranted for the period of time up to the scheduled replacement time for that part.

Items/Conditions Not Covered:

Not all product failures or malfunctions that occur during the warranty period are defects in materials or workmanship. The items / conditions listed below are not covered by this warranty:

- Product failures which result from the use of non−Toro replacement parts, or from installation and use of add−on, modified, or unapproved accessories are not covered.
- Product failures which result from failure to perform required maintenance and/or adjustments are not covered.
- Product failures which result from operating the Product in an abusive, negligent or reckless manner are not covered.
- This warranty does not apply to parts subject to consumption through use unless found to be defective. Examples of parts which are consumed, or used up, during normal Product operation include, but are not limited to tines, spark plugs, castor wheels, tires, filters, belts, etc.
- This warranty does not apply to failures caused by outside influence. Items considered to be outside influence include, but are not limited to, weather, storage practices, contamination, use of unapproved coolants, lubricants, additives, or chemicals, etc.
- This warranty does not apply to normal "wear and tear" items. Normal "Wear and Tear" includes, but is not limited to, damage to seats due to wear or abrasion, worn painted surfaces, scratched decals or windows, etc.

Other Legal Disclaimers:

The above remedy of product defects through repair by an authorized distributor or dealer is the purchaser's sole remedy for any defect. This warranty gives you specific legal rights, and you may also have other rights which vary from state to state.

Except for the Emissions warranty referenced below, if applicable, there is no other express warranty. All implied warranties of merchantability and fitness for use are limited to the duration of the express warranty.

Some states do not allow limitations on how long an implied warranty lasts, so the above limitation may not apply to you.

The Toro Company is not liable for indirect, incidental or consequential damages in connection with the use of the Product, including any cost or expense of providing substitute Product or service during periods of malfunction or non−use.

Some states do not allow the exclusion of incidental or consequential damages, so the above exclusion may not apply to you.

Note to California residents: The Emissions Control System on your Product may be covered by a separate warranty meeting requirements established by the U.S. Environmental Protection Agency (EPA), or the California Air Resources Board (CARB). The hour limitations set forth above do not apply to the Emissions Control System Warranty. Refer to the California Emission Control Warranty Statement printed in your Owner's Manual or contained in the engine manufacturer's documentation for details.

PROTOTYPE