Form No. 3421-484 Rev B

TORO®

Count on it.

Parts Catalog

Groomer Pull Link Kit, Serial Number 401500000 and After

Greensmaster® 3120 or Greensmaster® 3150 Traction Unit

Model No. 138-4976

Register at www.Toro.com.
Original Instructions (EN)

3421-484 B

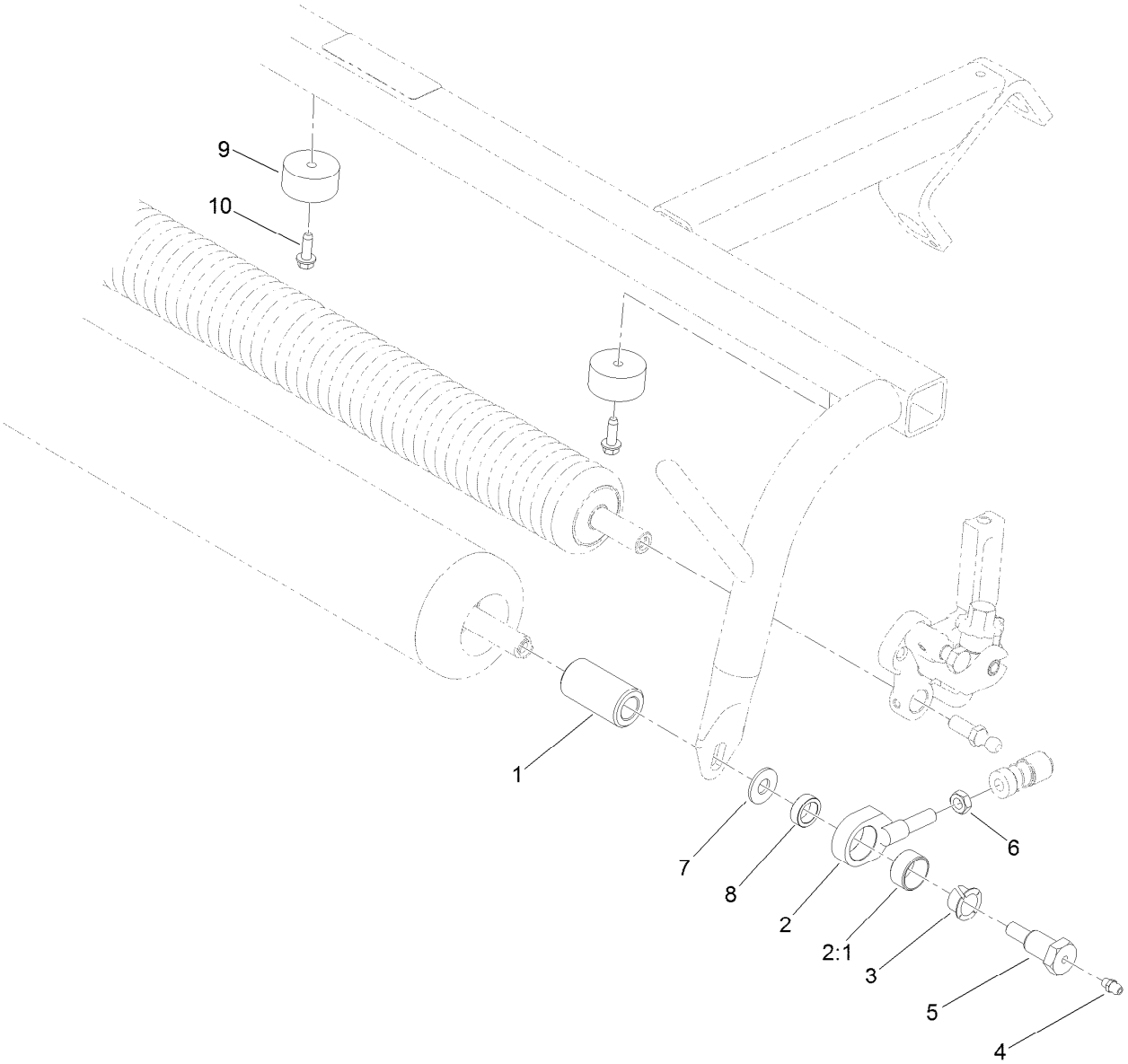

Groomer Pull Link Kit Assembly No. 138-4976

Ref.	*Part Number*	*Qty.*	*Description*
1	88-6830	6	Spacer-Frame, Carrier
2	139-6472	6	Pull Link ASM
2:1	95-0532	1	Rubber Bushing ASM
3	104-7738	6	Bushing-Flange
4	302-5	6	Fitting-Grease
5	138-4974	6	Screw-Link, Pull
6	3220-3	6	Nut-HJ
7	3256-4	6	Washer-Flat
8	98-2389	6	Spacer-Link, Pull
9	94-4548	6	Bumper-Recessed
10	32144-44	6	Screw-HWH, Thread Roll