Form No. 3323-219

TORO®

53 cm Recycler®

Walk Power Lawn Mower

Model No. 20789—200000001 and Up
Model No. 20791—200000001 and Up

PROTOTYPE

Operator's Manual

CE

Interntional English (GB)

Contents

	Page
Introduction	2
Safety	3
General Lawn Mower Safety	3
Sound Pressure	5
Sound Power	5
Vibration Level	5
Symbol Glossary	5
Assembly	7
Unpacking the Lawn Mower	7
Installing the Handle	7
Installing the Starter Rope	8
Installing the Discharge Tunnel Plug	8
Installing the Battery	9
Before Starting	9
Filling the Crankcase with Oil	9
Filling the Fuel Tank with Gasoline	10
Operation	11
Controls	11
Starting the Engine	11
Stopping the Engine	12
Self–propelled Drive	12
Adjusting the Cutting Height	12
Using the Grass Bag	13
Operating Tips	14
Maintenance	15
Recommended Maintenance Schedule	15
Checking the Engine Oil Level	16
Changing the Engine Oil	16
Cleaning the Underside of the Lawn Mower Housing	17
Servicing the Air Filter	18
Maintaining the Cutting Blade	19
Adjusting the Self-propelled Drive Cable	20
Lubricating the Self-propelled Drive	20
Cleaning Under the Belt Cover	20
Replacing the Spark Plug	21
Cleaning the Cooling System	21
Cleaning the Plug and Discharge Tunnel	21
Emptying the Fuel Tank	21
Charging the Battery	21
Disposing of the Battery	22
Replacing the Fuse	22
Troubleshooting	22
Storage	23
Preparing the Fuel System	23
Preparing the Engine	24
General	24
Folding the Handle	24
Removing From Storage	24
Accessories	24

Introduction

Thank you for choosing a Toro product. We want you to be completely satisfied with your new purchase.

Read this manual carefully to learn how to operate and maintain your product properly. The information in this manual can help you and others avoid injury and product damage. Although Toro designs and produces safe products, you are responsible for operating the product properly and safely.

Whenever you contact your Authorized Service Dealer or the factory for help with service, genuine Toro parts, or additional information, have the model number and the serial number of your product handy. You will find the model number and serial number decal on the product as illustrated in Figure 1.

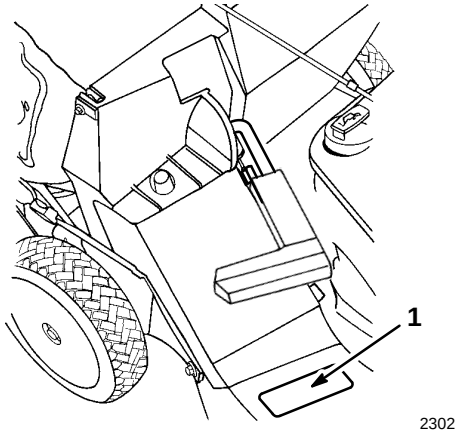

Figure 1

1. Model number and serial number decal

PROTOTYPE

Write the product model number and serial number in the space below:

Model No. _____

Serial No. _____

This manual identifies potential hazards and has special safety messages that help you and others avoid personal injury and even death. DANGER, WARNING, and CAUTION are words used to identify the level of hazard.

©**The Toro Company – 1999**

8111 Lyndale Ave. South
Bloomington, MN 55420–1196

Printed in USA

DANGER signals an extreme hazard that will cause serious injury or death if you do not follow the recommended precautions.

WARNING signals a hazard that may cause serious injury or death if you do not follow the recommended precautions.

CAUTION signals a hazard that may cause minor or moderate injury if you do not follow the recommended precautions.

This manual uses two other words to highlight information. **Important** calls attention to special mechanical information and **Note** emphasizes general information worthy of special attention.

Safety

To ensure maximum safety, best performance, and to gain knowledge of the product, it is essential that you and any other operator of the lawn mower read and understand the contents of this manual before the motor is ever started. Pay particular attention to the safety alert symbol ⚠ which means CAUTION, WARNING, OR DANGER — "personal safety instruction." Read and understand the instruction because it has to do with safety. Failure to comply with instruction may result in personal injury.

General Lawn Mower Safety

The following instructions have been adapted from the ANSI/OPEI standard B71.1—1998 and ISO standard 5395:1990(E). Information or terminology specific to Toro lawn mowers is enclosed in parenthesis.

This cutting machine is capable of amputating hands and feet and throwing objects. Failure to observe the following safety instructions could result in serious injury or death.

Training

- Read the instructions carefully. Be familiar with the controls and the proper use of the equipment before starting.
- See manufacturer's instructions for proper operation and installation of accessories. Only use accessories approved by the manufacturer.
- Never allow children or people unfamiliar with these instructions to use the mower. Local regulations may restrict the age of the operator.
- Never mow while people, especially children, or pets are nearby. Stop mower if anyone enters the area.

Tragic accidents can occur if the operator is not alert to the presence of children. Children are often attracted to the mower and the mowing activity. **Never** assume that children will remain where you last saw them.

- Keep children out of the mowing area and under the watchful care of a responsible adult.
- Be alert and turn mower off if children enter the area.
- Use extra care when approaching blind corners, shrubs, trees, or other objects that may obscure vision.
- Keep in mind that the operator or user is responsible for accidents or hazards occurring to other people or their property.

Preparation

- While mowing, always wear substantial footwear and long trousers.
- Do not operate the equipment when barefoot or wearing open sandals.
- Always wear safety goggles or safety glasses with side shields when operating mower.
- Thoroughly inspect the area where the equipment is to be used and remove all stones, sticks, wires, bones, and other foreign objects.
- **Warning: Gasoline is highly flammable.** Take the following precautions:
  - Store fuel in containers specifically designed for this purpose.
  - Refuel outdoors only and do not smoke while refuelling.
  - Add fuel before starting the engine. Never remove the cap of the fuel tank or add gasoline while the engine is running or when the engine is hot.
  - If gasoline is spilled, do not attempt to start the engine but move the machine away from the area of spillage and avoid creating any source of ignition until gasoline vapors have dissipated.
  - Replace all fuel tank and container caps securely.
  - If the fuel tank has to be drained, do this outdoors.
- Replace faulty mufflers.
- Before using, always visually inspect to see that the blades, blade bolts, and cutter assembly are not worn or damaged. Replace worn or damaged blades and bolts in sets to preserve balance.
- On multibladed machines, take care as rotating one blade can cause other blades to rotate.

PROTOTYPE

Operation

- Do not operate the engine in a confined space where dangerous carbon monoxide fumes can collect.
- Mow only in daylight or in good artificial light.
- Always be sure of your footing on slopes.
- Walk; never run.
- Keep a firm hold on the handle.
- Mow across the face of slopes, never up and down.
- Exercise extreme caution when changing direction on slopes.
- Do not mow excessively steep slopes.
- Use extreme caution when reversing or pulling the mower towards you.
- Before and while moving backwards, look behind and down for small children.
- Stop the blade(s) if the mower has to be tilted for transportation when crossing surfaces other than grass and when transporting the mower to and from the area to be mowed.
- Never operate the mower with defective guards or shields, or without safety devices; for example, deflectors and/or grass catchers in place.
- Do not change the engine governor settings or overspeed the engine.
- Disengage all blade and drive clutches before starting the engine.
- Start the engine or switch on the motor carefully according to instructions and with feet well away from the blade(s).
- Do not tilt when starting the engine or switching on the motor, unless the mower has to be tilted for starting. In this case, do not tilt it more than absolutely necessary and lift only the part which is away from the operator.
- Do not start the engine when standing in front of the discharge chute.
- Do not put hands or feet near or under rotating parts. Keep clear of the discharge opening at all times.
- Never pick up or carry a mower while the engine is running.
- Stop the engine and disconnect the spark plug lead
  - before clearing blockages or unclogging chute;
  - before checking, cleaning, or working on the mower;
  - after striking a foreign object. Inspect the mower for damage and make repairs before restarting and operating the mower;
  - if mower starts to vibrate abnormally. Check immediately for the cause. Vibration is generally a warning of trouble.
- Stop the engine
  - whenever you leave the mower;
  - before refuelling.
- Reduce the throttle setting during engine run-out and, if the engine is provided with a shut-off valve, turn the fuel off at the conclusion of mowing.
- Stop the blade(s) when crossing gravel drives, walks, or roads.
- Shut the engine (motor) off and wait until the blade comes to complete stop before removing grass catcher.
- Do not operate the mower while under the influence of alcohol or drugs.

Slopes are a major factor related to slip and fall accidents which can result in severe injury. All slopes require extra caution feel uneasy on a slope, do not mow it.

- Watch for holes, ruts, or bumps. Tall grass can hide obstacles.
- **Do not** mow near drop-offs, ditches, or embankments. The operator could lose footing or balance.
- **Do not** mow on wet grass. Reduced footing could cause slipping.

Maintenance and Storage

- Keep all nuts, bolts (especially blade attachment bolts), and screws tight to be sure the equipment is in safe working condition.
- Never store the equipment with gasoline in the tank inside a building where fumes may reach an open flame or spark.
- Allow the engine to cool before storing in any enclosure.
- To reduce the fire hazard, keep the engine, muffler, battery compartment, and gasoline storage area free of grass, leaves, or excessive grease.
- Replace worn or damaged parts for safety.
- Use extra care when handling gasoline; vapors are explosive.
- Never tamper with safety devices. Check their proper operation regularly.

PROTOTYPE

- Keep the mower free of grass, leaves, or other debris build-up. Clean up oil or fuel spillage.
- Never attempt to make wheel height adjustments while the engine (motor) is running.
- Always disconnect electric mowers (live operated) before cleaning, repairing, or adjusting.
- Grass catcher components are subject to wear, damage, and deterioration, which could expose moving parts or allow objects to be thrown. Frequently check components and replace with manufacturer's recommended parts when necessary.
- Mower blades are sharp and can cut. Wrap the blade(s) or wear gloves, and use extra caution when servicing them.
- Do not change the engine governor setting or overspeed the engine.

Sound Pressure

This unit has an equivalent continuous A-weighted sound pressure at the operator ear of 85.4 dB(A), based on measurements of identical machines per ANSI B71.5-1984 procedures.

Sound Power

This unit has a sound power level of 98.6 LwA, based on measurements of identical machines per Directive 84/538/EEC and amendments.

Vibration Level

This unit has a maximum hand-arm vibration level of 7.27 m/s^2, based on measurement of identical machines per ISO 5349 procedures.

Symbol Glossary

Safety alert triangle — symbol within triangle indicates a hazard.

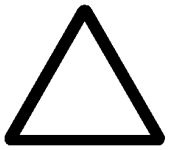

Safety alert symbol



Read operator's manual.



Consult technical manual for proper service procedures.



Stay a safe distance from the machine.

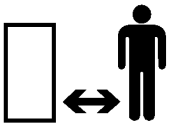

Stay a safe distance from the mower.

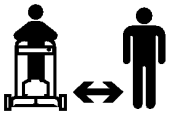

Do not open or remove safety shields while engine is running.

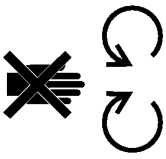

Rotating blade can cut off toes or fingers. Stay clear of mower blade as long as engine is running.



To avoid blade failure when mulching, use blade stiffener when mower is equipped with mulching plug.

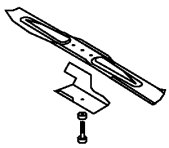

Transmission

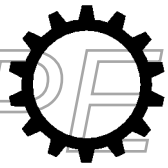

Oil



On/Run



PROTOTYPE

Throw or flying objects — Whole body exposure



Thrown or flying objects — Rotary side-mounted mower. Keep deflector shield in place.

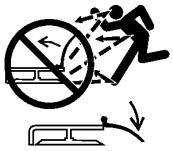

Stop engine before leaving operator position.



Hourmeter/elapsed operating hours

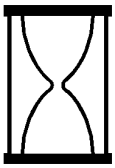

Fast



Slow



Decreasing/Increasing



Grease lubrication point



Engage

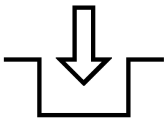

Disengage

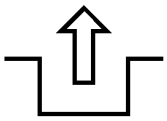

Battery charging condition

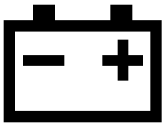

Fuel



Neutral

N

First gear

1

Second gear

2

Third gear

3

PROTOTYPE

Engine start

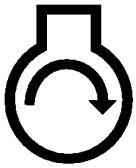

Engine stop



Cutting element — basic symbol



Cutting element — height adjustment



Choke	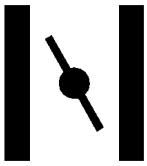	**Turn key in ignition switch.**	
Primer (start aid)	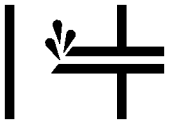	**Move control.**	
Push primer three times.	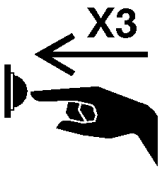	**Pull rope.**	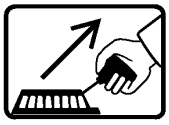
Properly dispose of batteries.		**Wheel**	
Insert key in ignition switch.	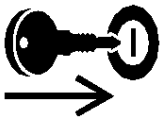	**Wheel traction**	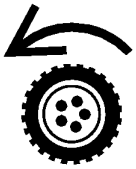

Assembly

Note: Determine the left and right sides of the lawn mower by standing in the operating position.

Unpacking the Lawn Mower

IMPORTANT: Be extremely careful when unpacking and handling the lawn mower and upper handle so that you do not pull, crimp, or damage the cables.

1. Remove the fillers from the box, and allow the upper handle to rest on the top of the lawn mower.
2. Remove the lawn mower from the box.
3. Lay the upper handle on the ground behind the lawn mower with the handle label facing up and the control cables routed between the handle mounting brackets.

PROTOTYPE

Installing the Handle

1. Remove the four handle bolts and knobs in the lower handle (two bolts have a flat cap and the other two have a contoured cap to fit the handle (Fig. 2).

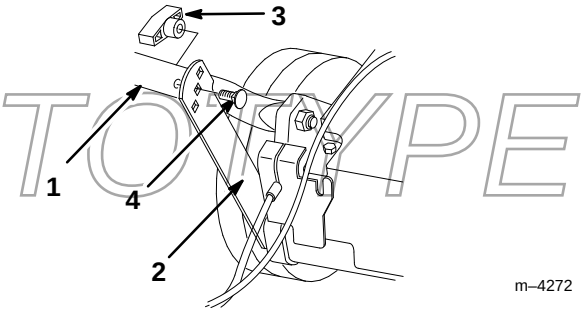

Figure 2

1. Lower handle
2. Support bracket
3. Knob
4. Flat handle bolt

2. Swing the lower handle back and the support brackets up, aligning the brackets with the holes in the handle (Fig. 2).

3. Secure the handle to the support brackets with the two flat handle bolts and two knobs, using the height adjustment holes on the brackets that best fit your height (Fig. 2)

IMPORTANT: Keep the cables from pinching or stretching.

Note: You can adjust the handle height by installing the handle bolt and knob through a different set of holes.

4. Slide the upper handle section ends over the lower handle so that the sections nest together (Fig. 3)

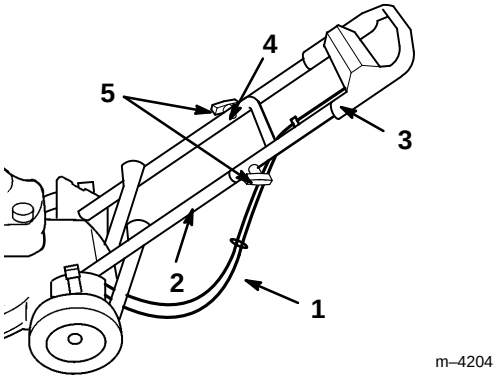

Figure 3

1. Cables
2. Lower handle
3. Upper handle
4. Contoured handle bolt (only one shown)
5. Knobs

5. Make sure that the cables are routed below and behind the lower handle as illustrated in Figure 3.

6. Secure the upper handle to the lower handle using two contoured handle bolts and two knobs (Fig. 3).

Installing the Starter Rope

Pull the starter rope through the rope guide on the handle (Fig. 4).

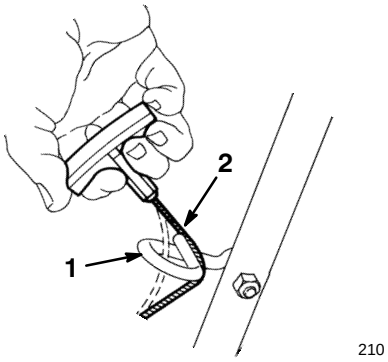

Figure 4

1. Rope guide
2. Starter rope

Note: To make the starter rope easier to install, squeeze the control bar on the handle.

Installing the Discharge Tunnel Plug

1. Stop the engine and wait for all moving parts to stop.

2. Open the discharge door by moving the handle rearward (Fig. 5).

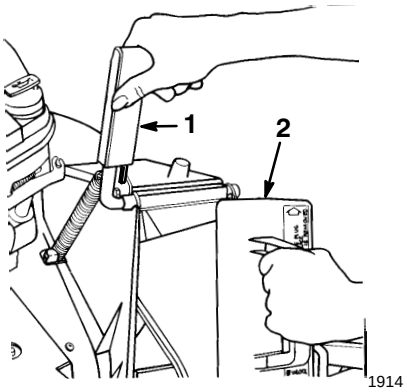

Figure 5

1. Discharge door handle
2. Plug (rotated clockwise)

PROTOTYPE

3. Hold the discharge door handle to prevent the spring-loaded door from closing while you insert the plug.

4. Rotate the plug clockwise slightly while inserting it (Fig. 5).

   Make sure that the arrow on the plug decal points upward.

5. Push the plug all the way in until the spring clip on the bottom of the plug clicks into place (Fig. 6).

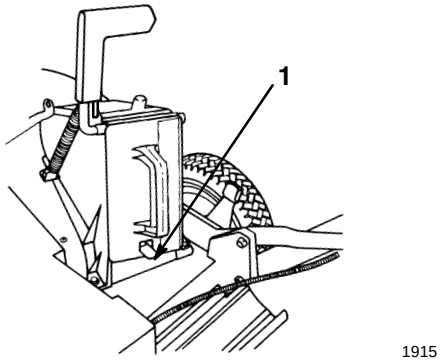

Figure 6

1. Spring clip

---

6. Release the discharge door handle to lock the top of the plug.

7. To remove the plug:

A. Move the discharge door handle rearward while lifting up the spring clip on the bottom of the plug.

B. Once the plug is unlocked, remove it from the discharge tunnel.

Installing the Battery

Electric Start Models only

1. Remove the battery from the packaging material and charge it; refer to *Charging the Battery* on page 21.

2. Align the pins in the battery case with the holes in the lower handle and lower the pins into the holes until the battery case snaps into place (Fig. 7).

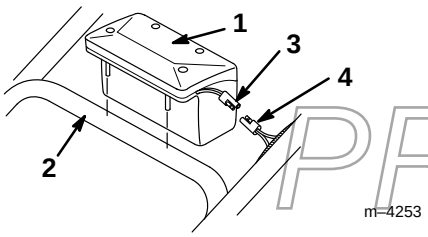

Figure 7

1. Battery case
2. Lower handle
3. Wire lead from battery
4. Wire lead from harness

---

3. Connect the wire lead from the battery to the wire lead from the electrical wire harness in the corrugated tube (Fig. 7).

Before Starting

Filling the Crankcase with Oil

The crankcase can hold 22 ounces (0.65 liters) of oil. Use only high-quality, SAE 30 or 10W30 weight detergent oil that has the American Petroleum Institute (API) “service classification” — SF, SG, SH, or SJ.

Before each use, make sure that the oil level is between the *Add* and the *Full* marks on the dipstick (Fig. 8).

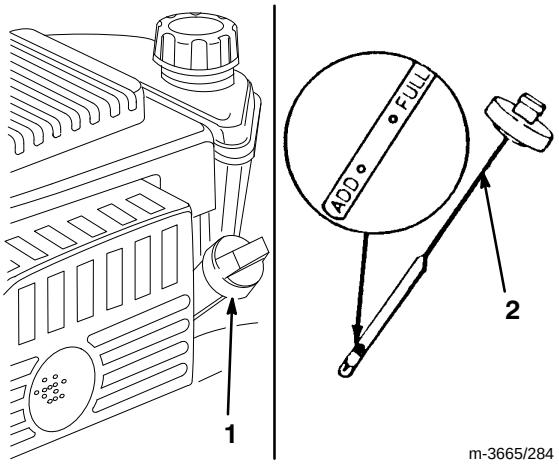

Figure 8

1. Oil fill tube
2. Dipstick

To add oil:

1. Move the lawn mower to a level surface.

2. Clean around the oil fill tube (Fig. 8).

3. Remove the dipstick from the oil fill tube by rotating the cap counterclockwise 1/4 turn and pulling it out.

4. Wipe the dipstick clean with a clean cloth.

5. Fully insert the dipstick into the oil fill tube, then remove it.

Note: For an accurate oil level reading, you must fully install the dipstick.

PROTOTYPE

6. Read the oil level on the dipstick (Fig. 8).

7. If the oil level reading is below the *Add* mark on the dipstick, **slowly** pour only enough oil into the oil fill tube to raise the oil level to the *Full* mark on the dipstick.

IMPORTANT: Do not overfill the crankcase with oil and run the engine; engine damage can result. Drain the excess oil until the oil level on the dipstick reads *Full*.

8. Insert the dipstick into the filler neck and rotate the cap clockwise 1/4 turn.

Filling the Fuel Tank with Gasoline

For best results, use clean, fresh, lead-free gasoline, including *oxygenated* or *reformulated* gasoline, with an octane rating of 87 or higher. To ensure freshness, purchase only the quantity of gasoline that you expect to use in 30 days. Using unleaded gasoline results in fewer combustion deposits and longer spark plug life. You may use leaded gasoline if unleaded gasoline is not available.

IMPORTANT: Do not add oil to the gasoline.

IMPORTANT: Do not use methanol, gasoline containing methanol, gasohol containing more than 10% ethanol, premium gasoline, or white gas. Using these fuels can damage the engine's fuel system.

IMPORTANT: Do not use gasoline that has been stored since the last mowing season or longer.

⚠ DANGER

POTENTIAL HAZARD
- **In certain conditions gasoline is extremely flammable and highly explosive.**

WHAT CAN HAPPEN
- **A fire or explosion from gasoline can burn you, others, and cause property damage.**

HOW TO AVOID THE HAZARD
- **Use a funnel and fill the fuel tank outdoors, in an open area, when the engine is cold. Wipe up any gasoline that spills.**
- **Do not fill the fuel tank completely full. Add gasoline to the fuel tank until the level is 1/4 to 1/2 in. (6 mm to 13 mm) below the bottom of the filler neck. This empty space in the tank allows gasoline to expand.**
- **Never smoke when handling gasoline, and stay away from an open flame or where gasoline fumes may be ignited by a spark.**
- **Store gasoline in an approved container and keep it out of the reach of children.**
- **Never buy more than a 30-day supply of gasoline.**

⚠ DANGER ⚠

POTENTIAL HAZARD
- **When fueling, under certain circumstances, a static charge can develop, igniting the gasoline.**

WHAT CAN HAPPEN
- **A fire or explosion from gasoline can burn you and others and cause property damage.**

HOW TO AVOID THE HAZARD
- **Always place gasoline containers on the ground away from your vehicle before filling.**
- **Do not fill gasoline containers inside a vehicle or on a truck or trailer bed because interior carpets or plastic truck bed liners may insulate the container and slow the loss of any static charge.**
- **When practical, remove gas–powered equipment from the truck or trailer and refuel the equipment with its wheels on the ground.**
- **If this is not possible, then refuel such equipment on a truck or trailer from a portable container, rather than from a gasoline dispenser nozzle.**
- **If a gasoline dispenser nozzle must be used, keep the nozzle in contact with the rim of the fuel tank or container opening at all times until fueling is complete.**

Use a fuel stabilizer/conditioner regularly during operation and storage. A stabilizer/conditioner cleans the engine during operation and prevents gum–like varnish deposits from forming in the engine during periods of storage.

IMPORTANT: Do not use fuel additives other than a fuel stabilizer/conditioner. Do not use fuel stabilizers with an alcohol base such as ethanol, methanol, or isopropanol.

1. Remove the wire from the spark plug (Fig. 9).

PROTOTYPE

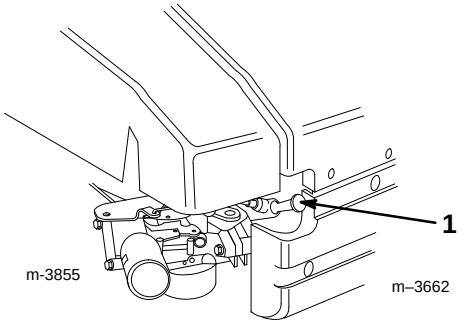

Figure 9

1. Spark plug wire

2. Clean around the fuel tank cap (Fig. 10).

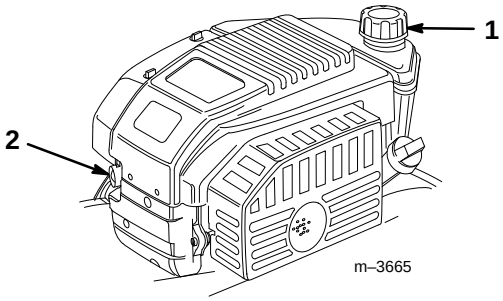

Figure 10

1. Fuel tank cap
2. Primer

3. Remove the fuel tank cap (Fig. 10).

4. Fill the fuel tank with unleaded gasoline to within 1/4 to 1/2 in. (6 to 13 mm) from the top of the tank. **Do not fill into the filler neck.**

5. Install the fuel tank cap and wipe up any spilled gasoline.

Operation

Each time before you mow, make sure that the self-propelled drive and the control bar operates properly. When you release the control bar, the engine and the self-propelled drive should stop. If they do not, contact your Authorized Service Dealer.

Controls

The starter handle and the blade control bail are on the upper handle as shown in Figure 11.

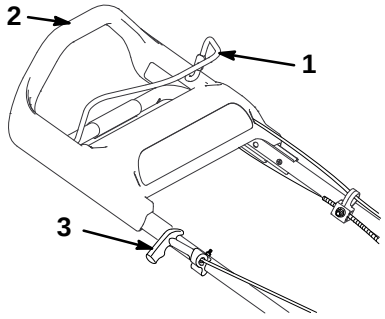

Figure 11

1. Blade control bail
2. Upper handle
3. Starter handle

Starting the Engine

1. Install the spark plug wire onto the spark plug.

2. Push the primer three times, waiting two seconds between each push (Fig. 10).

Note: If the temperature is 55°F (13°C) or below, push the primer five times, waiting two seconds between each push.

Note: Do not use the primer to start a warm engine after a brief shutdown. However, cool weather may require you to prime the engine again.

3. Hold the blade control bail against the upper handle (Fig. 12).

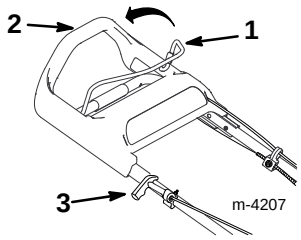

Figure 12

1. Blade control bail
2. Upper handle
3. Starter handle

PROTOTYPE

4. Start the lawn mower.

Manual starting:

A. Pull the starter handle lightly until you feel resistance, then pull it sharply (Fig. 12).

B. Allow the rope return to the handle slowly.

Key–lectric starting (for an electric models only):

A. Insert the key into the switch (Fig. 13).

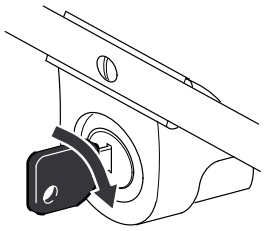

Figure 13

B. Turn the key to the right and release it when the engine starts.

5. When the engine starts, allow it to warm up for at least one minute; longer in cooler temperatures.

Note: If the engine fails to start after three attempts, repeat steps 2 through 4.

Stopping the Engine

Release the blade control bail. Both the engine and the blade should stop. If they do not stop properly, contact your Authorized Service Dealer.

Self–propelled Drive

To operate the self-propelled drive, simply walk forward with your hands on the upper handle. As you move forward, the upper handle will slide toward the lawn mower, activating the self-propelled drive. The faster you walk, the farther the handle will slide and the faster the mower will propel (Fig. 14).

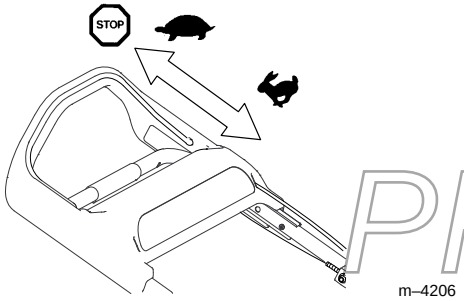

Figure 14

Note: The lawn mower propels at the maximum speed when you push in the upper handle as far forward as possible.

To slow down the drive, simply slow your walking speed; to stop the drive, stop walking (Fig. 14).

Note: If, when backing up after self-propelling, the lawn mower does not roll backward freely, nudge the lawn mower forward about an inch without engaging the self–propel drive, then pull the lawn mower backward.

Adjusting the Cutting Height

The *SmartWheel* has two cutting scales: *SPARSE/NORMAL* and *LUSH* — to ensure the best height-of-cut setting in any mowing condition (Fig. 15). Use the *SPARSE/NORMAL* scale during the warm summer season for the majority of your mowing. The *LUSH* scale is for thick, moist, succulent grass that grows most often in the spring.

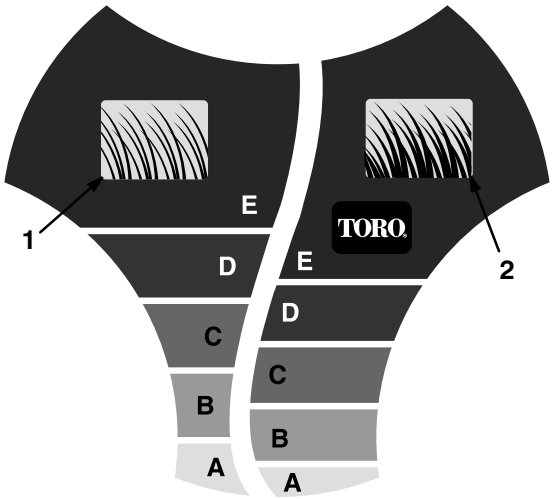

Figure 15

1. Sparse/normal grass cutting scale
2. Lush grass cutting scale

We recommend the following:

- Cut the grass at the *C*, *D*, or *E* settings or keep the grass between 2 to 3 in. (5.1 to 7.6 cm) high.
- Do not cut below the *C* setting unless the grass is sparse or it is late fall when grass growth begins to slow down. When you cut long grass, use a higher height-of-cut setting and walk slower; then cut the grass again at a normal setting. Mowing the grass when it is too long can plug the lawn mower and cause the engine to stall.

Note: The *SmartWheel* calculates the proper setting to ensure that you cut no more than 1/3 of the grass blade.

PROTOTYPE

⚠ DANGER

POTENTIAL HAZARD
- **Adjusting height-of-cut levers could bring hands into contact with moving blade.**

WHAT CAN HAPPEN
- **Contact with moving blade could cause serious personal injury.**

HOW TO AVOID THE HAZARD
- **Do not adjust height-of-cut settings when engine is running and blade is rotating.**
- **Do not put fingers under housing to lift mower when adjusting height-of-cut levers.**

1. Before starting the engine, move the lawn mower onto the grass. Stop moving the lawn mower when the letters on the *SmartWheel*™ design on the rear left wheel are upright (Fig. 15).
2. Use the *SmartWheel* design (Fig. 15) to compare the tips of the grass blades to the letters on the wheel. The letter on the *SmartWheel* that matches the tips of the grass blades is the proper cutting height.
3. Squeeze the lawn mower's height-of-cut lever toward the wheel and move it to the corresponding letter on the lawn mower housing (Fig. 16).

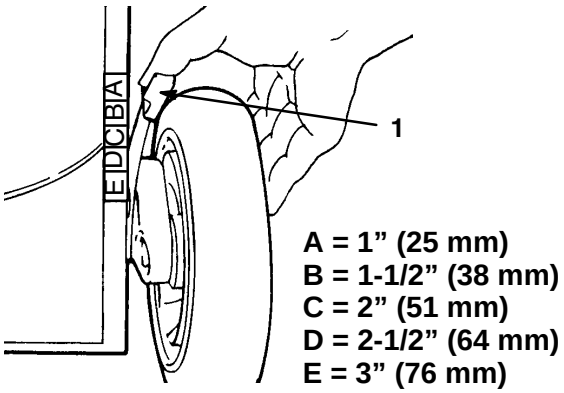

Figure 16

1. Height-of-cut lever

Note: For easier adjustment, lift up the housing so that the wheel is off the ground. **Do not put your fingers under the housing when you lift the lawn mower.**

4. Make sure that the pin on the height-of-cut lever engages the slot in the housing.
5. Adjust all the wheels to the same letter setting.

Note: You can adjust the front wheels to 1/2 in. (1.3 cm). Move the height-of-cut lever past *A* and release the pin into the slot in the housing.

Using the Grass Bag

Occasionally, you may want to use the grass bag for bagging long grass, lush grass, or leaves.

Installing the Grass Bag

1. Stop the engine and wait for all moving parts to stop.
2. Make sure that the discharge door handle is fully forward and the pin is contacting the catch (Fig. 17).

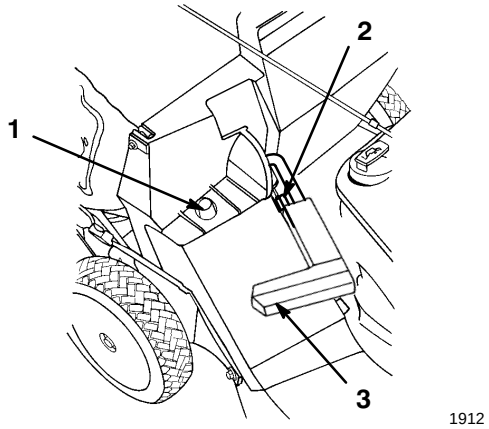

Figure 17

1. Bag frame on retaining post
2. Pin contacting catch
3. Handle fully forward and discharge door closed

3. Slide the hole in the bag frame onto the retaining post on the housing (Fig. 17).
4. Set the rear of the grass bag frame onto the lower handle.
5. Pull the discharge door handle forward and move the handle rearward until the pin locks in the bag notch (Fig. 18).

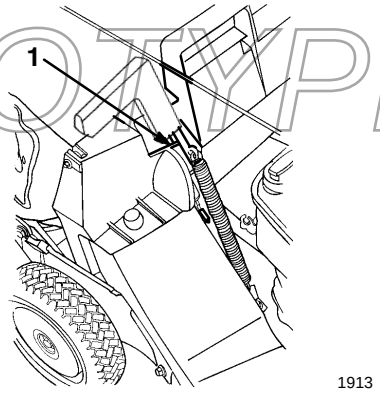

Figure 18

1. Pin locked in bag notch

The discharge door in the mower housing is now open.

PROTOTYPE

Mowing with the Grass Bag

DANGER

POTENTIAL HAZARD
- **A worn grass bag could allow small stones and other similar debris to be thrown in operator's or bystander's direction.**

WHAT CAN HAPPEN
- **Thrown objects can cause serious personal injury or death to the operator or bystanders.**

HOW TO AVOID THE HAZARD
- **Check the grass bag frequently. If it is damaged, install a new Toro replacement bag.**

Cut the grass until the bag is full.

IMPORTANT: Do not overfill the bag.

Removing the Grass Bag

1. Stop the engine and wait for all moving parts to stop.
2. Raise the discharge door handle and move it forward until the locking pin contacts the catch (Fig. 17).
3. Grasp the handle at the front and the rear of the bag and lift the bag off the lawn mower.
4. Gradually tip the bag forward to empty the clippings.
5. To install the bag, refer to steps 3 and 4 of *Installing the Grass Bag* on page 13.

DANGER

POTENTIAL HAZARD
- **Thrown objects may result if the discharge door does not close completely.**

WHAT CAN HAPPEN
- **Thrown objects can cause serious personal injury or death.**

HOW TO AVOID THE HAZARD
- **If the discharge door cannot be closed because grass clippings clog the discharge area, stop the engine and gently move the discharge door handle back and forth until the door can be closed completely. If door still cannot be closed, remove the obstruction with a stick, not your hand.**

DANGER

POTENTIAL HAZARD
- **Grass clippings and other objects can be thrown from an open discharge tunnel.**

WHAT CAN HAPPEN
- **Objects thrown with enough force could cause serious personal injury or death to the operator or bystander.**

HOW TO AVOID THE HAZARD
- **Never open the door on the discharge tunnel when the engine is running.**

Operating Tips

- Review the safety instructions and read this manual carefully before operating the lawn mower.
- Clear the area of sticks, stones, wire, branches, and other debris that the lawn mower could pick up or the blade could hit and throw objects.
- Keep everyone, especially children and pets, away from the area of operation.
- Avoid striking trees, walls, curbs, or other solid objects. Never deliberately mow over any object.
- If the lawn mower strikes an object or starts to vibrate, immediately stop the engine, disconnect the spark plug wire, and examine the lawn mower for damage.
- Maintain a **sharp blade** throughout the cutting season. Periodically file down nicks on the blade.
- Replace the blade when necessary with an original Toro replacement blade.
- Mow only dry grass or leaves. Wet grass and leaves tend to clump on the yard and can cause the lawn mower to plug or the engine to stall.

PROTOTYPE

WARNING

POTENTIAL HAZARD
- **Wet grass or leaves can cause you to slip and contact the blade.**

WHAT CAN HAPPEN
- **Blade contact can seriously injure you.**

HOW TO AVOID THE HAZARD
- **Mow only in dry conditions.**

- Clean the clippings or leaves from the underside of the lawn mower deck after each mowing. See *Cleaning the Underside of the Lawn Mower Housing* on page 17.

- Keep the engine in good running condition.
- Clean the air filter frequently. Mulching stirs up more clippings and dust which clogs the air filter and reduces engine performance.

Cutting Grass

- Grass grows at different rates at different times of the year. In the summer heat, it is best to cut grass at the *C*, *D*, or *E* height-of-cut settings. Cut only about 1/3 of the grass blade at a time. Do not cut below the *C* setting unless the grass is sparse or it is late fall when grass growth begins to slow down.
- When cutting grass over six inches tall, first mow using the highest height-of-cut setting and walking slower; then mow again at a lower setting for best lawn appearance. If the grass is too long and the leaves clump on top of the lawn, the lawn mower may plug and cause the engine to stall.
- Alternate the mowing direction. This helps disperse the clippings over the lawn for even fertilization.

If the finished cut lawn appearance is unsatisfactory, try one or more of the following:

- Sharpen the blade.
- Walk at a slower pace while mowing.
- Raise the height-of-cut setting on your lawn mower.
- Cut the grass more frequently.
- Overlap cutting swaths instead of cutting a full swath with each pass.
- Mow across the marginal areas a second time.
- Set the height-of-cut on the front wheels one notch lower than the rear wheels. For example, set the front wheels at the *C* setting and the rear wheels at the *D* setting.

Cutting Leaves

- After cutting the lawn, make sure that half of the lawn shows through the cut leaf cover. You may need to make one or more passes over the leaves.
- For light leaf coverage, set all the wheels at the same height-of-cut setting.
- If there are more than 5 in. (12.7) cm of leaves on the lawn, set the front wheels one or two notches higher than the rear wheels. This makes it easier to feed the leaves under the lawn mower deck.
- Slow down your mowing speed if the lawn mower does not cut the leaves finely enough.
- If you cut up a lot of oak leaves, you can add lime to your grass in the spring to reduce the acidity of the oak leaves.

Maintenance

Recommended Maintenance Schedule

Service Item	Service Operation	Each Use	5 Hours	25 Hours	50 Hours	100 Hours
Engine Oil—Check	Check the engine oil before each use.	X				
Engine Oil—Change	Drain and refill the engine crankcase with fresh oil after the first five hours of operation. Thereafter, change every 50 hours (25 hours in dusty conditions or in high temperatures) or yearly.				X	
Housing	Remove built-up grass clippings and dirt.	X				
Fasteners	Check the blade and the engine mounting fasteners. Tighten loose fasteners.		X			
Air Filter—Pre-cleaner	Replace the pre-cleaner every 25 hours or each mowing season. Replace it more frequently in dusty or dirty conditions.			X		

PROTOTYPE

Service Item	Service Operation	Each Use	5 Hours	25 Hours	50 Hours	100 Hours
Air Filter—Cartridge	Clean or replace the cartridge every 100 hours or each mowing season. Replace it more frequently in dusty or dirty conditions.					X
Blade	Sharpen or replace the blade; maintain it more frequently if the edge dulls quickly in rough or sandy conditions.				X	
Blade Brake	Check the stopping time every 50 hours or before each mowing season. The blade must stop within three seconds of releasing the bail; if it does not, see your Authorized Service Dealer for repair.				X	
Self–propelled Drive	Adjust the cable and grease the rear-height adjustor brackets.				X	
Fuel System	Check for leaks and/or a deteriorating fuel hose. Replace parts if necessary.				X	
Belt Cover	Remove grass clippings and debris from under the belt cover.				X	
Spark Plug	Inspect and clean. Replace the spark plug if necessary.					X
Cooling System	Clean debris from the engine air cooling fins and the starter. Clean more frequently in dirty conditions.					X
Fuel Tank	Empty the fuel tank before repairs as directed or before storage.					
Battery	Charge or replace the battery as necessary. Charge after extended storage.					

CAUTION

PROTOTYPE

POTENTIAL HAZARD

- **If you leave the wire on the spark plug, someone could start the engine.**

WHAT CAN HAPPEN

- **Someone accidentally starting the engine could seriously injure you or other bystanders.**

HOW TO AVOID THE HAZARD

- **Remove the wire from the spark plug before you do any maintenance. Push wire aside so it does not accidentally contact the spark plug.**

Checking the Engine Oil Level

Before you use the lawn mower, make sure that the oil level between the *Add* and the *Full* marks as shown on the dipstick (Fig. 8). If the oil level is below the *Add* mark, add oil. Refer to *Filling the Crankcase Oil* on page 9.

Changing the Engine Oil

Change the oil after the first five operating hours and then after every 50 hours or every season. Run the engine just before changing the oil to warm the oil. Warm oil flows better and carries more contaminants.

Note: Change the oil after every 25 hours when operating under heavy load or in high temperatures.

1. If the grass bag is on the lawn mower, close the door in the lawn mower housing and remove the bag.
2. Drain the gasoline from the fuel tank; refer to *Emptying the Fuel Tank* on page 21.
3. Remove the wire from the spark plug (Fig. 9)
4. Remove the key from the switch on the electric start model.
5. Remove the dipstick from the oil fill tube and place a drain pan next to left side of the lawn mower.
6. Tip the lawn mower onto its left side, allowing the oil to drain into the drain pan (Fig. 19).

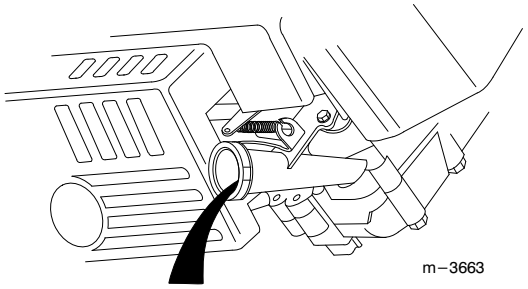

Figure 19

1. Oil fill tube

7. Recycle the used oil according to local codes.
8. Turn the lawn mower upright.
9. Fill the crankcase with fresh oil to the *Full* mark on the dipstick. Refer to *Filling the Crankcase with Oil* on page 9**.**
10. Install the dipstick.
11. Wipe up any spilled oil.
12. Install the wire onto the spark plug.

Cleaning the Underside of the Lawn Mower Housing

To ensure the best performance, keep the underside of the lawn mower housing clean. Be especially careful to keep the kickers free of debris (Fig. 20).

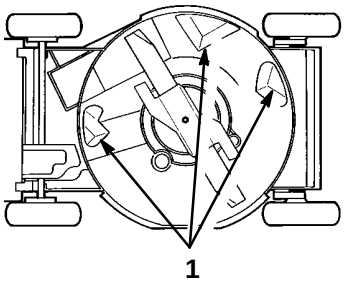

Figure 20

1. Kickers

Washing Method

1. Move the lawn mower onto a flat concrete or asphalt surface near a garden hose.
2. Attach a quick disconnect coupling (sold separately) to the end of the garden hose (Fig. 21).

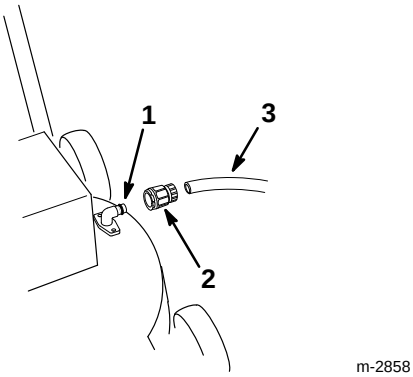

Figure 21

1. Washout fitting
2. Quick disconnect coupling
3. Hose

3. Attach the coupling to the lawn mower washout fitting (Fig. 21).
4. Turn the water on high pressure.
5. Start the engine.
6. Let the lawn mower run for two minutes.
7. Stop the engine and wait for all moving parts to stop.
8. Turn the water off and remove the coupling from the washout fitting.
9. Turn off the garden hose.
10. Start the lawn mower and let it run for one minute to dry out the lawn mower and its components.
11. While the engine is running, engage and disengage the traction drive several times to dry it out.

PROTOTYPE

If the underside of the lawn mower deck has excessive grass buildup, do the following steps:

1. Connect the hose to the washout fitting.
2. Turn the water on high.
3. Start the lawn mower and run it for two minutes.
4. Stop the engine and wait for all moving parts to stop.
5. Turn off the water.
6. Let the mower soak for 30 minutes.
7. Turn the water on high again.
8. Run the mower for two minutes.
9. Stop the engine and wait for all moving parts to stop.

Scraping Method

If washing does not remove all debris from under the lawn mower, tip it on its left side and scrape it clean.

1. Remove the wire from the spark plug (Fig. 9).
2. Drain the gasoline from the fuel tank. Refer to steps 1 through 4 of *Emptying the Fuel Tank* on page 21.

WARNING

POTENTIAL HAZARD
- **Gasoline is extremely flammable, highly explosive and under certain conditions can cause personal injury or property damage.**

WHAT CAN HAPPEN
- **Tipping the lawn mower may cause fuel leakage from the carburetor or fuel tank.**

HOW TO AVOID THE HAZARD
- **Avoid fuel spills by running the engine dry or removing gas with a hand pump; never siphon.**

3. Tip the lawn mower onto its left side (Fig. 20).
4. Remove the dirt and grass clippings with a hardwood scraper. Avoid burrs and sharp edges.

IMPORTANT: Move the blade as little as possible to avoid future starting problems.

5. Turn the lawn mower upright.
6. Fill the fuel tank.
7. Install the wire onto the spark plug.

Servicing the Air Filter

Clean the air filter once every season or after every 25 operating hours. Clean or replace the paper cartridge after every 100 hours or every season; more frequently in dusty or dirty conditions.

1. Stop the engine and wait for all moving parts to stop.
2. Remove the wire from the spark plug (Fig. 9).

Note: For the electric start model, remove the key from the switch.

3. Remove two knobs that secure the air filter cover to the engine (Fig. 22).
4. Remove the cover and clean it thoroughly (Fig. 22).

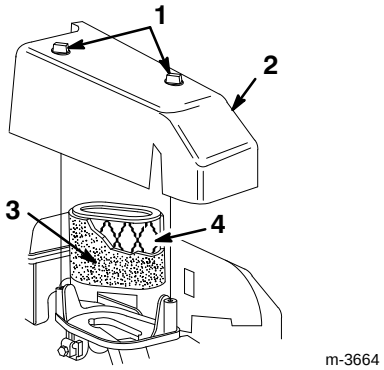

Figure 22

1. Knobs
2. Cover
3. Foam pre–cleaner
4. Air filter

5. Carefully remove the pre-cleaner.
6. If the pre-cleaner is dirty, carefully wash it with a mild detergent and water. Rinse the pre-cleaner in clean water and allow it to dry (Fig. 22).
7. If the paper cartridge is dirty, clean it by tapping it **gently** on a flat surface. Replace the cartridge if it is very dirty.

IMPORTANT: Do not oil the pre-cleaner or the paper cartridge. Do not use pressurized air to clean the paper cartidge.

8. Install the pre-cleaner over the paper cartridge (Fig. 22).
9. Install the air filter cover (Fig. 22).
10. Tighten the cover securely in place with the two knobs (Fig. 22).

IMPORTANT: Do not operate the engine without the air filter element; extreme engine damage could occur.

PROTOTYPE

Maintaining the Cutting Blade

Always mow with a sharp blade. A sharp blade cuts cleanly and without tearing or shredding the grass blades like a dull blade.

1. Drain the gasoline from the fuel tank; refer to steps 1 through 4 of *Emptying the Fuel Tank* on page 21.
2. Remove the wire from the spark plug (Fig. 9).
3. If a grass bag is on the lawn mower, close the door in the lawn mower housing and remove the bag.
4. Tip the lawn mower onto its left side (Fig. 23).

IMPORTANT: Move the blade as little as possible to avoid future starting problems.

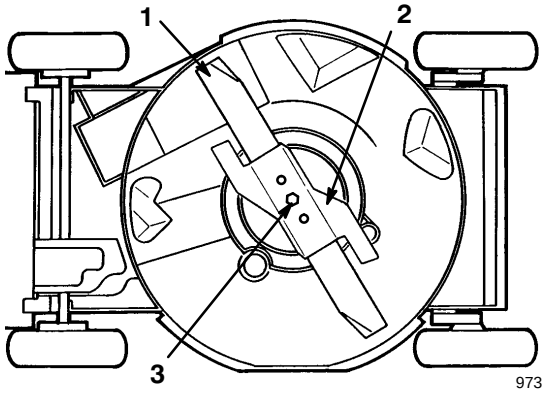

Figure 23

1. Blade
2. Accelerator
3. Blade bolt

Inspecting the Blade

Carefully examine the blade for sharpness and wear, especially where the flat and the curved parts meet (Fig. 24A). Because sand and abrasive material can wear away the metal that connects the flat and curved parts of the blade, check the blade before using the lawn mower. If you notice a slot or wear (Figs. 24B and 24C), replace the blade; refer to *Removing the Blade* on page 19.

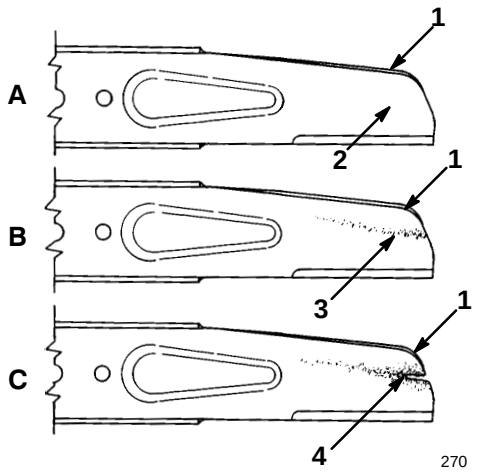

Figure 24

1. Sail
2. Flat part of blade
3. Wear
4. Slot formed

Note: For the best performance, install a new blade before the cutting season begins. During the year, file down any small nicks to maintain the cutting edge.

Removing the Blade

Grasp the end of the blade using a rag or a thickly padded glove. Remove the blade bolt, the lock washer, the accelerator, and the blade (Fig. 23).

⚠ DANGER

POTENTIAL HAZARD

- **A worn or damaged blade could break and a piece of blade could be thrown into operator's or bystander's area.**

WHAT CAN HAPPEN

- **A thrown piece of blade could cause serious personal injury or death to operator or bystanders.**

HOW TO AVOID THE HAZARD

- **Inspect the blade periodically for wear or damage.**
- **Replace a worn or damaged blade.**

PROTOTYPE

Sharpening the Blade

File the top side of the blade to maintain its original cutting angle (Fig. 25). The blade will remain balanced if you remove the same amount of material from both cutting edges.

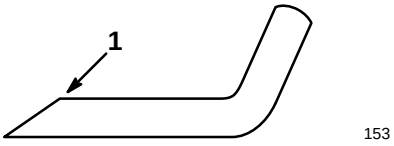

Figure 25

1. Sharpen at this angle only

IMPORTANT: Check the balance of the blade by putting it on a blade balancer. You can buy an inexpensive balancer at a hardware store. A balanced blade is level horizontally, while an unbalanced blade drops toward the heavy side. If the blade is not balanced, file more metal off of the cutting edge on the heavy end of the blade.

Installing the Blade

1. Install a sharp, balanced Toro blade, an accelerator, a lock washer and a blade bolt. The blade's sail must point toward the top of the lawn mower housing for proper installation. Torque the blade bolt to 50 ft-lb (68 N·m).
2. Return the lawn mower to its upright position.
3. Install the wire onto the spark plug.

Adjusting the Self-propelled Drive Cable

If the top speed begins to slow on the lawn mower, adjust the self-propelled drive cable.

1. With the engine turned off, remove the two bolts that secure the belt cover (Fig. 29).
2. Remove the cover.
3. Loosen the cable support nut (Fig. 26).

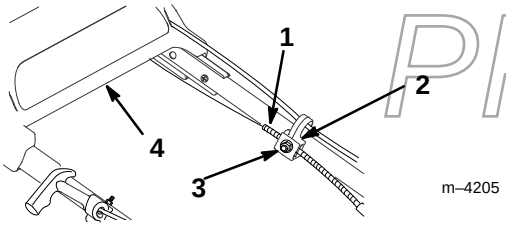

Figure 26

1. Cable jacket
2. Cable support
3. Nut
4. Upper handle

4. Push the drive bracket down until it contacts the lawn mower, then hold it in place (Fig. 27).

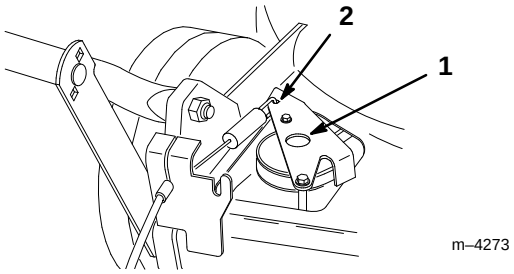

Figure 27

1. Drive bracket
2. Push here

5. With the upper handle pulled and held back as far as possible and while holding the drive bracket down, pull the cable jacket down (toward the lawn mower) to remove all the slack in the cable (Fig. 26).
6. Tighten the nut on the cable support (Fig. 26).
7. Release the drive bracket.
8. Install the belt cover.

Lubricating the Self-propelled Drive

1. Wipe the grease fittings on the rear height-of-cut adjustors (Fig. 28) with a clean rag.

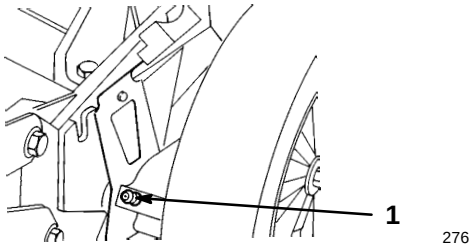

Figure 28

1. Grease fitting

2. Install a hand-type grease gun onto each fitting in turn and gently apply one or two pumps of #2 multi-purpose lithium grease.

IMPORTANT: Excess grease may damage the seals and prevent the wheel clutch from operating properly.

Cleaning Under the Belt Cover

Keep the area under the belt cover free of debris.

1. Stop the engine and wait for all moving parts to stop.
2. Remove the two bolts that secure the belt cover to the lawn mower housing (Fig. 29).

PROTOTYPE

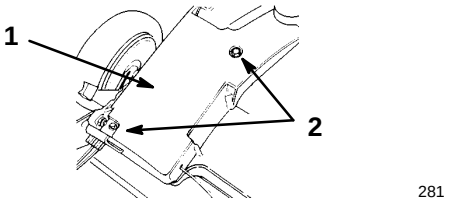

Figure 29

1. Belt cover
2. Bolts

3. Lift off the cover and remove all debris from the belt area.
4. Install the belt cover.

Replacing the Spark Plug

Check the spark plug after every 25 operating hours. Use a *Champion RC12YC* spark plug or equivalent.

1. Stop the engine and wait for all moving parts to stop.
2. Remove the wire from the spark plug (Fig. 9).
3. Clean around the spark plug.
4. Remove the spark plug from the cylinder head.

IMPORTANT: Replace a cracked, fouled, or dirty spark plug. Do not clean the electrodes because grit entering the cylinder can cause engine damage.

5. Set the gap on the new plug to 0.020 in. (0.50 mm) (Fig. 30).

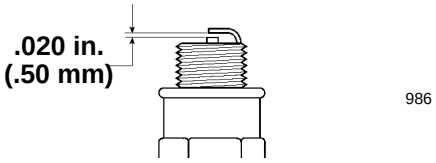

Figure 30

6. Install the spark plug and the gasket seal.
7. Torque the plug to 15 ft-lb (20 N·m).
8. Install the wire to the spark plug.

Cleaning the Cooling System

After every 100 operating hours or every season, clean the dirt and the chaff from the cylinder, the cylinder head fins and around the carburetor and the linkage. Remove debris from the air intake slots on the recoil housing. This will ensure proper cooling and the best engine performance.

Cleaning the Plug and Discharge Tunnel

To ensure the best performance, clean the discharge tunnel plug after each use. When the grass is thick and lush, clippings may collect on and around the plug, making plug removal difficult.

Always be sure that the discharge tunnel door closes when you release the handle. If debris prevents the discharge door from closing, clean the inside of the discharge tunnel and the door thoroughly.

Emptying the Fuel Tank

1. Stop the engine and wait for it to cool.
2. Remove the wire from the spark plug (Fig. 9).

Note: Drain the gasoline from a cold engine only.

3. Remove the cap from the fuel tank (Fig. 8).
4. Use a pump-type syphon to drain the fuel into a clean, approved gasoline container.
5. Install the wire onto the spark plug.
6. Run the engine until it stops.
7. Start the engine again to make sure that all the gasoline is out of the carburetor.

Charging the Battery

Electric Start Models only

Charge a new battery for 72 continuous hours to ensure a full charge. Charge the battery before and after long periods of storage. During normal operation, the engine alternator keeps the battery charged.

1. Stop the engine and wait for all moving parts to stop.
2. Disconnect the wire harness from the battery (Fig. 7).
3. Remove the battery by lifting it up and off of the lower handle.

Note: You do not need to remove the battery if the lawn mower is near an electrical outlet.

4. Connect the Toro electro charger to the battery and plug it into a 120VAC power outlet.

IMPORTANT: Use only the Toro electro charger; other chargers could damage the battery. Always charge the battery indoors and at room temperature (70°F) when possible. Do not charge the battery longer than 72 hours; overcharging can damage the battery.

5. After charging the battery, unplug the charger and disconnect it from the battery.

PROTOTYPE

6. Connect the wire harness to the battery terminal.

Disposing of the Battery

Electric Start Models Only

IMPORTANT: Do not dispose of used batteries in your regular trash.

IMPORTANT: Recycle or dispose of a sealed lead (acid) battery according to local codes.

Incinerating, landfilling, or mixing sealed lead (acid) batteries with the municipal solid waste stream is **prohibited by law** in most areas.

Return this battery to a federal- or state-approved, sealed lead (acid) battery recycler.

Contact your local waste management officials for more information regarding the environmentally sound collection, recycling, and disposal of the battery.

Replacing the Fuse

Electric Start Models only

A fuse protects the electrical system charging circuit. If the battery does not stay charged, the fuse may be blown. Use a 5-amp plug-in type fuse.

1. Remove and discard the blown fuse.

2. Install the new fuse as shown in Figure 31.

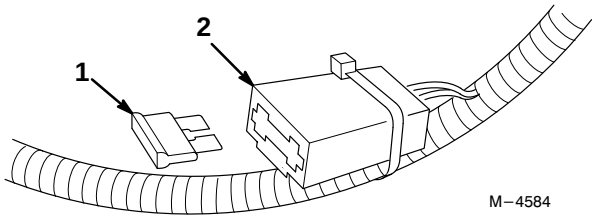

Figure 31

1. Fuse
2. Fuse holder

Troubleshooting

Your lawn mower was designed and built for trouble-free operation. Check the following components and items carefully. If a problem continues, see your Authorized Service Dealer.

Problem	Corrective Action
Engine will not start	1. Fill the fuel tank with fresh gasoline 2. Move the throttle lever to the *Fast* position 3. Press the primer three times 4. Spark plug • Install the spark plug wire • Clean the spark plug, check the spark plug gap, and replace the spark plug if it damaged
Engine starts hard or loses power	1. Drain and fill the fuel tank with fresh gasoline 2. Replace the air filter element 3. Clean the underside of the lawn mower deck 4. Clean the spark plug, check the spark plug gap, and replace the spark plug if it damaged 5. Check the engine oil

PROTOTYPE

Problem	Corrective Action
Engine runs rough	1. Install the spark plug wire 2. Clean the spark plug, check the spark plug gap, and replace the spark plug if it damaged 3. Move the throttle lever from the *Slow* to the *Fast* position 4. Replace the air filter element
Mower or engine vibrates excessively	1. Balance the blade. If the blade is bent, replace it. 2. Tighten the blade mounting bolt 3. Clean the underside of the lawn mower deck 4. Tighten the engine mounting bolts
Uneven cutting pattern	1. Place all four wheels at the same height 2. Sharpen and balance the blade 3. Change the mowing pattern 4. Clean the underside of the lawn mower deck
Discharge chute plugs	1. Move throttle lever from the *Slow* to the *Fast* position 2. Raise the cutting height 3. Slow down 4. Allow the grass to dry before mowing 5. Clean the underside of the lawn mower deck
Mower will not self-propel	1. Adjust the self-propelled drive cable 2. Clean the debris from under the belt cover.

Storage

To prepare the lawn mower for off-season storage, perform the recommended maintenance procedures. Refer to *Maintenance* on page 15.

Store the lawn mower in a cool, clean, dry place. Cover the lawn mower to keep it clean and protected.

PROTOTYPE

Preparing the Fuel System

WARNING

POTENTIAL HAZARD

- **Gasoline can vaporize if stored over long periods of time.**

WHAT CAN HAPPEN

- **Vaporized fuel can explode if it comes into contact with open flame.**

HOW TO AVOID THE HAZARD

- **Do not store gasoline (fuel) over long periods of time.**
- **Do not store lawn mower with fuel in the tank in an enclosure with an open flame. (Example: a furnace or water heater pilot light.)**
- **Allow the engine to cool before storing in any enclosure.**

Empty the fuel tank when mowing the last time before storing the lawn mower.

1. Run the lawn mower until the engine stops from running out of fuel.

2. Prime the engine and start it again.

3. Allow the engine to run until it stops. When you can no longer start the engine, it is sufficiently dry.

Preparing the Engine

1. While the engine is still warm, drain the oil from the crankcase. Refer to *Changing the Engine Oil* on page 16.

2. Remove the spark plug (Fig. 9).

3. Using an oil can, add about one tablespoon of oil to the crankcase through the spark plug hole.

4. Slowly rotate the engine several times, using the starter rope, to distribute the oil.

5. Install the spark plug but **do not** install the spark plug wire.

General

1. Clean the lawn mower housing. Refer to *Cleaning the Underside of the Lawn Mower Housing* on page 17.

2. Clean any dirt and chaff from the cylinder, cylinder head fins, and blower housing.

3. Remove grass clippings, dirt, and grime from the external parts of the engine, the shrouding, and the top of the lawn mower housing.

4. Check the condition of the blade. Refer to *Maintaining the Cutting Blade* on page 19.

5. Charge the battery; refer to *Charging the Battery* on page 21. Store the battery in an unheated area, if possible. For long-term battery storage, charge the battery every six months; in temperatures of 80°F (27°C) or above, charge the battery every 90 days.

6. Tighten all nuts, bolts, and screws.

7. Lubricate the self–propelled drive. Refer to *Lubricating the Self-Propelled Drive* on page 20.

8. Touch up all rusted or chipped paint surfaces with paint available from an Authorized Service Dealer.

Folding the Handle

IMPORTANT: Fold the handle carefully so that you do not pull, crimp, or in any way damage the cables.

IMPORTANT: Do not remove or loosen the knobs that secure the lower handle to the swing bracket. Do not fold the upper handle backward.

1. Loosen the knobs that secure the upper handle.

2. Carefully swing the upper handle forward until it rests on the engine (Fig. 32).

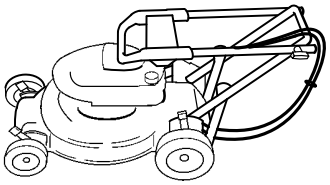

m–4217

Figure 32

Removing From Storage

1. Carefully unfold the upper handle until it nests with the lower handle, then tighten the knobs.

IMPORTANT: Be extremely careful when unfolding the handle so that you do not pull, crimp, or in any way damage the control cables.

2. Check and tighten all fasteners.

3. Remove the spark plug (Fig. 9) and spin the engine rapidly using the starter to remove the excess oil from the cylinder.

4. Clean the spark plug or replace it if it is cracked, broken, or if the electrodes are worn.

5. Install the spark plug and torque it to 15 ft-lb (20 N·m).

6. Perform the recommended maintenance procedures; refer to *Maintenance* on page 15.

7. Charge the battery; refer to *Charging the Battery* on page 21.

8. Fill the fuel tank (Fig. 8) with fresh gasoline.

9. Check the engine oil level. Refer to *Checking the Engine Oil Level* on page 16.

10. Install the wire onto the spark plug.

Accessories

PROTOTYPE

You may purchase the following accessories from your Authorized Service Dealer:

- Side Discharge Kit
- Dethatcher Kit