Form No. 3431-696 Rev A

TORO®

Count on it.

Parts Catalog

Stand-On Spreader/Sprayer

Model No. 34215—Serial No. 400000000 and Up

Register at www.Toro.com.
Original Instructions (EN)

3431-696 A

Ordering Replacement Parts

To order replacement parts, please supply the part number, the quantity, and the description of each part desired.

Understanding Reference Numbers

Each identified part in an illustration has a reference number. The reference number for a part also appears in the parts list, along with other information about the part.

This catalog uses two special reference number formats, one to indicate parts in a service assembly and another to indicate the quantity of a given part in an illustration.

Service Assembly Reference Numbers

Parts in service assemblies have reference numbers in the form a:b. The a represents the reference number of the entire service assembly and the b represents a sequential number unique to each part within the service assembly.

For example, a wheel assembly might be identified by reference number 6, the tire by 6:1, the valve by 6:2, and the wheel by 6:3. When you order the assembly identified by reference number 6, you receive all parts identified by reference numbers 6:1,6:2, and 6:3. However, you may also order any part individually. Reference numbers of this type appear in illustration and in parts lists.

Reference Numbers Indicating Quantity

In an illustration, if a reference number indicates more than one part, the reference number has the form nX y. The n represents the quantity of the part, the X is the multiplication symbol, and the y represents the reference number.

For example, in an illustration, the reference number 2X 37 means that two of the parts identified by reference number 37 are indicated.

Contents

Frame Assembly 4
Knee Pad Assembly 6
Steering Assembly 8
Steering Linkage Assembly No. 126-7185 10
Ground Drive Assembly 12
Transaxle Cover Assembly No. 126-1462 14
Engine Assembly 16
Electrical Assembly 18
Spray System Assembly 20
Sprayer Tank Assembly No. 126-0286 22
Strainer Assembly No. 126-4358 24
Control Valve Manifold Assembly 26
Spray Manifold Assembly No. 126-7635 28
Hose Assembly No. 126-2250 30
Hose Assembly No. 126-7304 32
Left Nozzle Assembly No. 126-3667 34
Right Nozzle Assembly No. 126-3669 36
Center Nozzle Assembly No. 126-3668 38
Spreader Assembly 40
Spreader Hopper Assembly 42
Side Deflector Assembly 44

© 2019—The Toro® Company
8111 Lyndale Avenue South
Bloomington, MN 55420

Contact us at www.Toro.com.
Printed in the USA.
All Rights Reserved

Frame Assembly

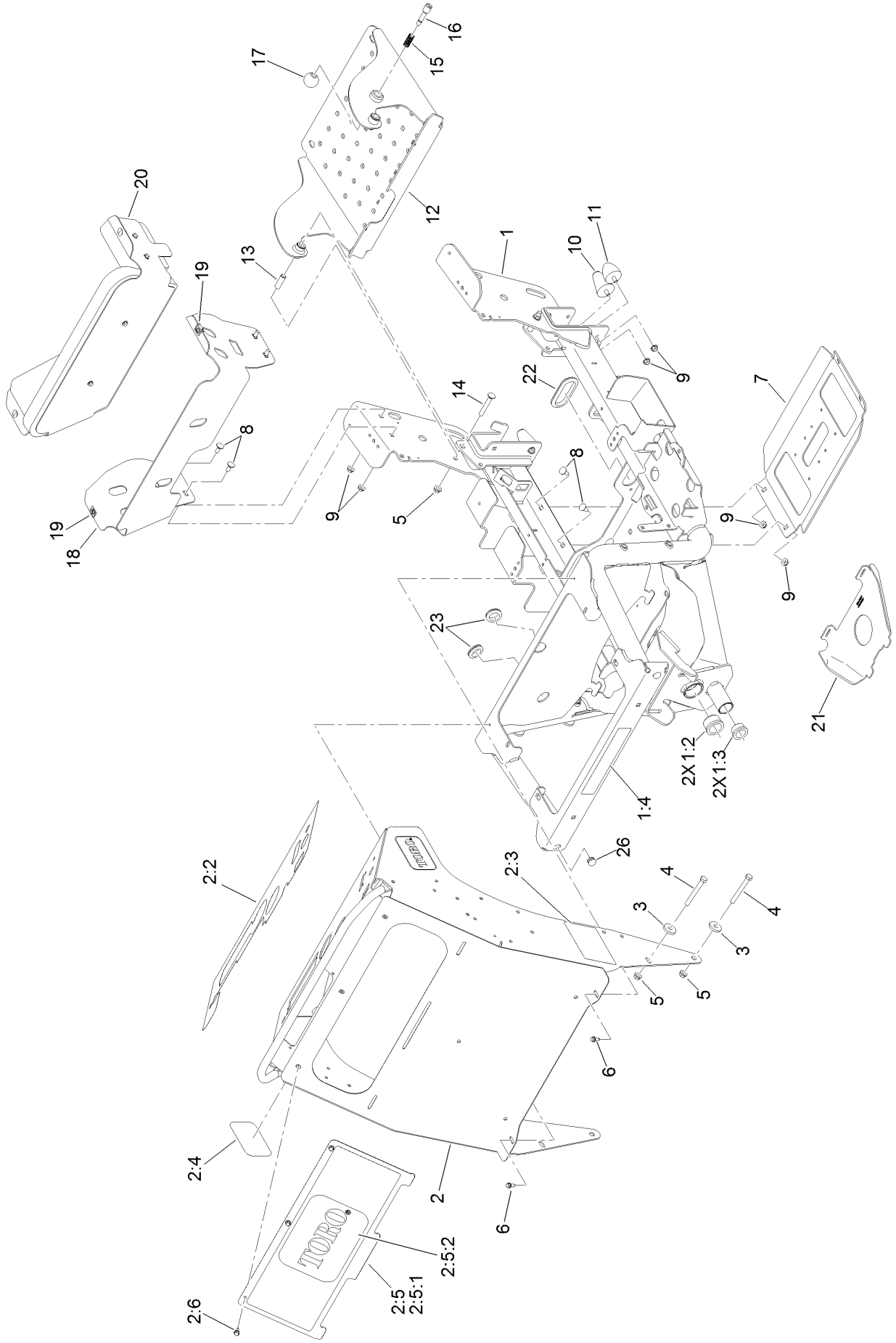

Frame Assembly (continued)

Ref.	Part Number	Qty.	Description
1	126-0198	1	Frame ASM
1:2	126-3008	2	Bearing-Flanged
1:3	126-3002	2	Bearing-Flanged
1:4	126-4994	1	Decal-Down, Tie
2	126-6401	1	Control Tower ASM
2:2	126-9655	1	Decal-Control
2:3	126-5186	1	Decal-Service Aid
2:4	126-5060	2	Decal-Logo, Toro
2:5	126-7216	1	Access Panel W/ Decal
2:5:1	126-6402-01	1	Panel-Access
2:5:2	126-7225	1	Decal-Toro
2:6	32144-10	3	Screw-HWH
3	126-3875	4	Washer
4	126-2661	4	Screw-HH
5	135-2882	6	Nut-HF
6	32144-10	2	Screw-HWH
7	126-1415	1	Guard-Lower

Ref.	Part Number	Qty.	Description
8	126-0695	8	Screw-CARR
9	135-2881	12	Nut-HF
10	114-1925	2	Bumper-Rubber
11	114-1926	2	Bumper-Rubber
12	126-0435	1	Operator Platform ASM
13	126-0434	2	Bushing-Pivot, Platform
14	126-0702	2	Screw-CARR
15	114-5348	1	Spring
16	119-8650	1	Pin-Latch
17	1-603175	1	Knob-Ball
18	126-1234-03	1	Mount-Pad, Knee
19	119-1730	2	Receptacle-Clip, Mini
20		1	Knee Pad ASM ●
21	126-2567	1	Shield-Dust
22	237-164	2	Grommet
23	240-5	2	Grommet
26	126-5147	2	Plug-Tube

● Not serviced separately

Knee Pad Assembly

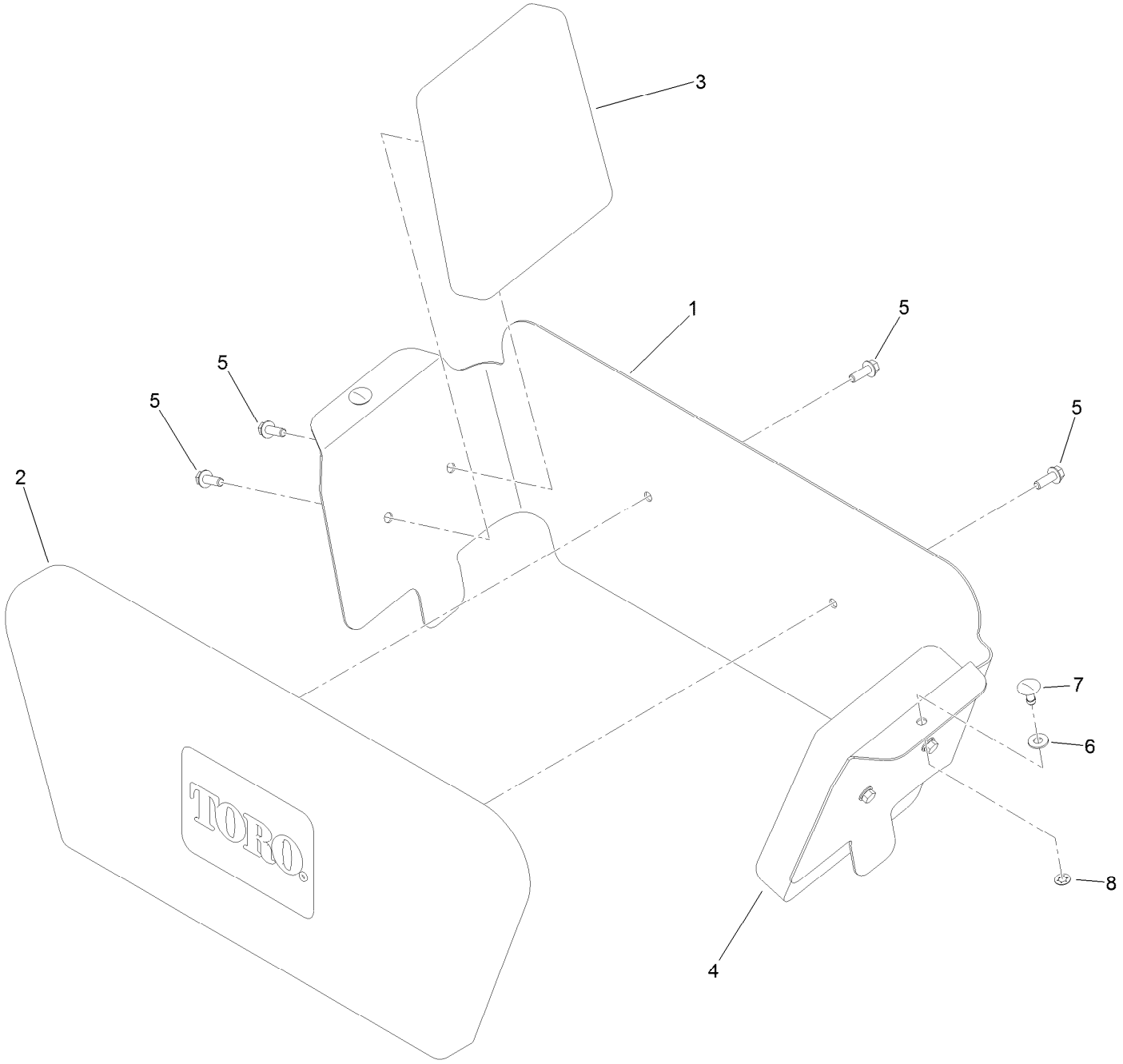

Knee Pad Assembly (continued)

Ref.	Part Number	Qty.	Description
1	126-1244-03	1	Bracket-Pad, Knee
2	126-2776	1	Pad-Knee, Center
3	126-2780	1	Pad-Knee, Side (LH)
4	126-2781	1	Pad-Knee, Side (RH)
5	117-8304	6	Screw-HHF
6	360-0140	2	Washer-Flat
7	119-1728	2	Stud-1/4 Turn
8	119-1729	2	Retainer-Stud

Steering Assembly

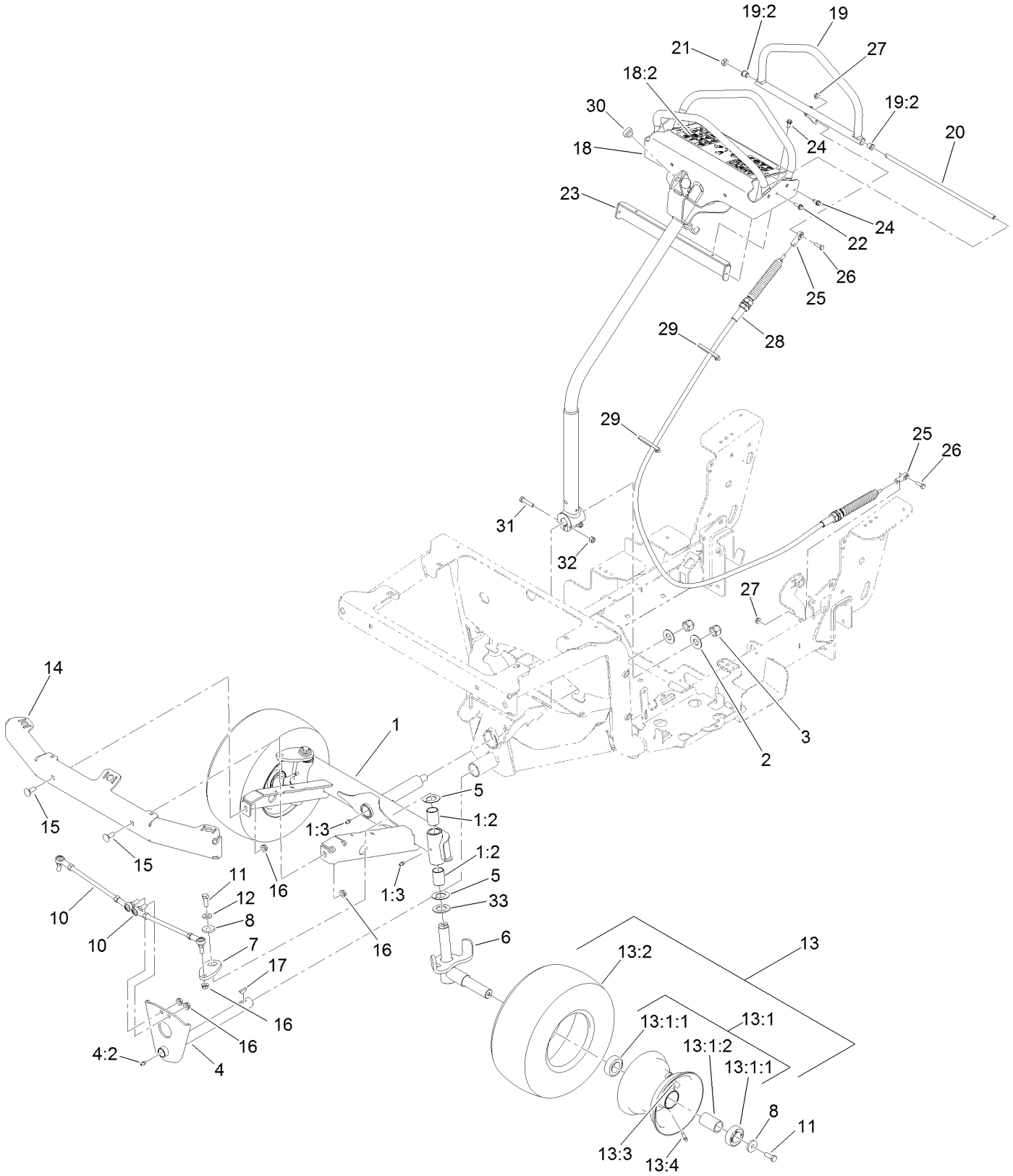

Steering Assembly (continued)

Ref.	Part Number	Qty.	Description
1	126-7045	1	Front Axle ASM
1:2	126-7048	4	Bearing-Sleeve
1:3	126-1375	3	Zerk-Grease
2	126-0656	1	Washer-Flat
3	126-3841	1	Nut-Hex, NI
4	135-3156	1	Steering Shaft ASM
4:2	126-1375	1	Zerk-Grease
5	126-7044	4	Washer-Thrust
6	126-6733	2	Front Axle ASM
7	126-7069	2	Arm-Steering
8	126-3875	4	Washer
10	126-7185	2	Steering Linkage ASM
11	135-1711	4	Screw-HH
12	98-5975	2	Washer-Belleville
13	126-7221	2	Wheel And Tire ASM
13:1	126-7261	1	Wheel ASM
13:1:1	116-0720	2	Bearing-Ball
13:1:2	126-7260	1	Spacer
13:2	126-1509	1	Tire
13:3	232-27	1	Stem-Valve
13:4	302-62	1	Fitting-Grease
14	116-9789	1	Bumper-Front

Ref.	Part Number	Qty.	Description
15	126-0980	2	Screw-CARR
16	135-2882	6	Nut-HF
17	3257-7	1	Key-Woodruff
18	135-3155	1	Motion Handle ASM
18:2	135-2844	1	Decal-Warning
19	126-1598	1	Motion Handle ASM
19:2	103-9928	2	Bearing
20	126-0496	1	Shaft-Pivot, Speed Control
21	116-4198	1	Spacer-Shaft, Drive Lever
22	117-8304	2	Screw-HHF
23	126-1604-03	1	Panel-Rear, Steering
24	32144-10	4	Screw-HWH
25	2411-41	2	Rod End-Ball Joint
26	126-0498	2	Screw-HH
27	135-2880	2	Nut-HF
28	126-2169	1	Cable-Motion
29	1-303335	2	Tie-Plastic
30	104-1412	2	Bumper-Rubber
31	3210-9	2	Screw-HH
32	32152-5	2	Nut-Hex
33	126-7050	2	Spacer-Relief

Steering Linkage Assembly No. 126-7185

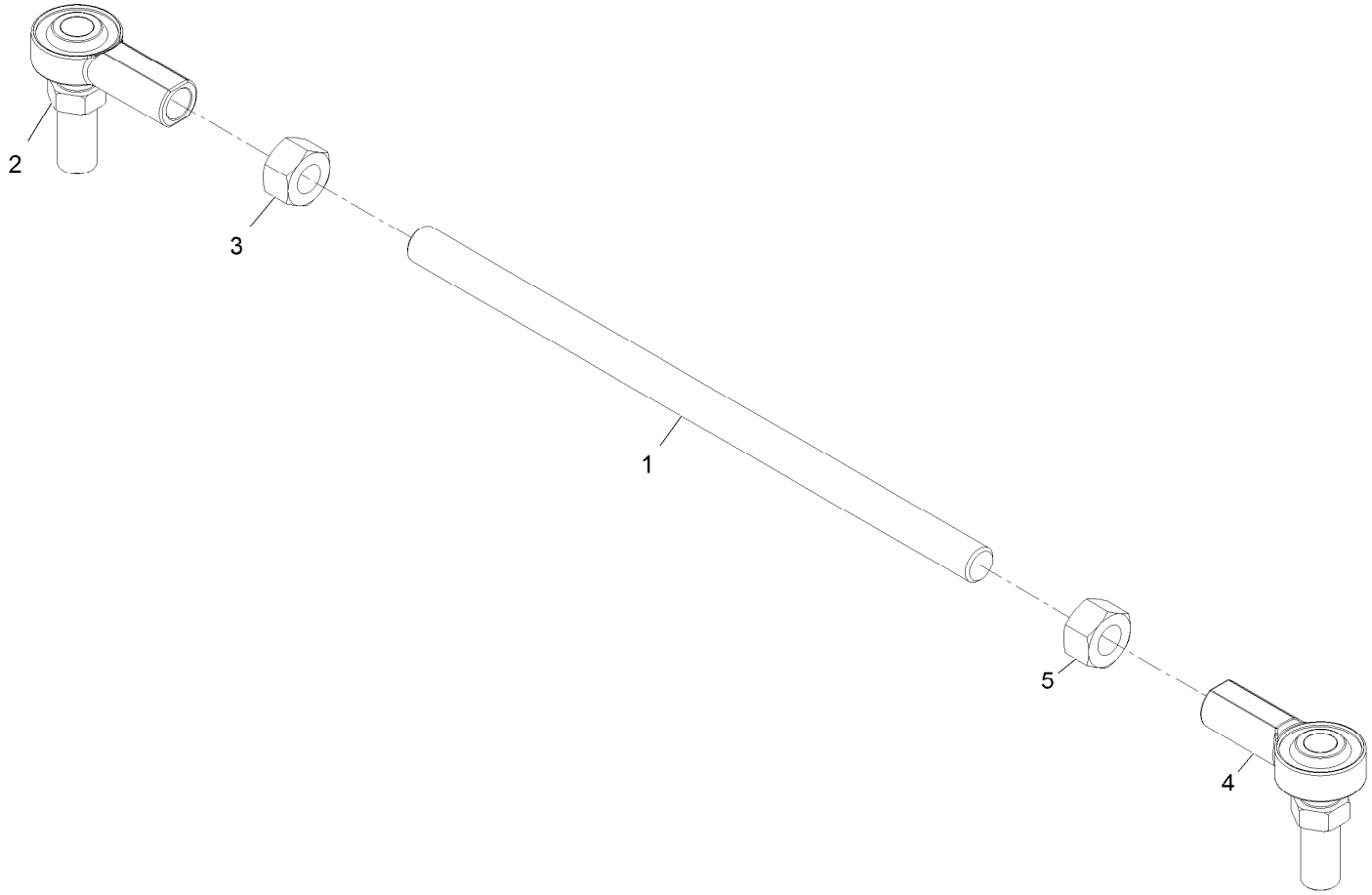

Steering Linkage Assembly No. 126-7185 (continued)

Ref.	Part Number	Qty.	Description
1	126-7183	1	Rod-Linkage, Steering
2	126-7181	1	Rod-End, RH
3	126-0687	1	Nut-Hex
4	126-7182	1	Rod-End, LH
5	126-0688	1	Nut-Hex, LH

Ground Drive Assembly

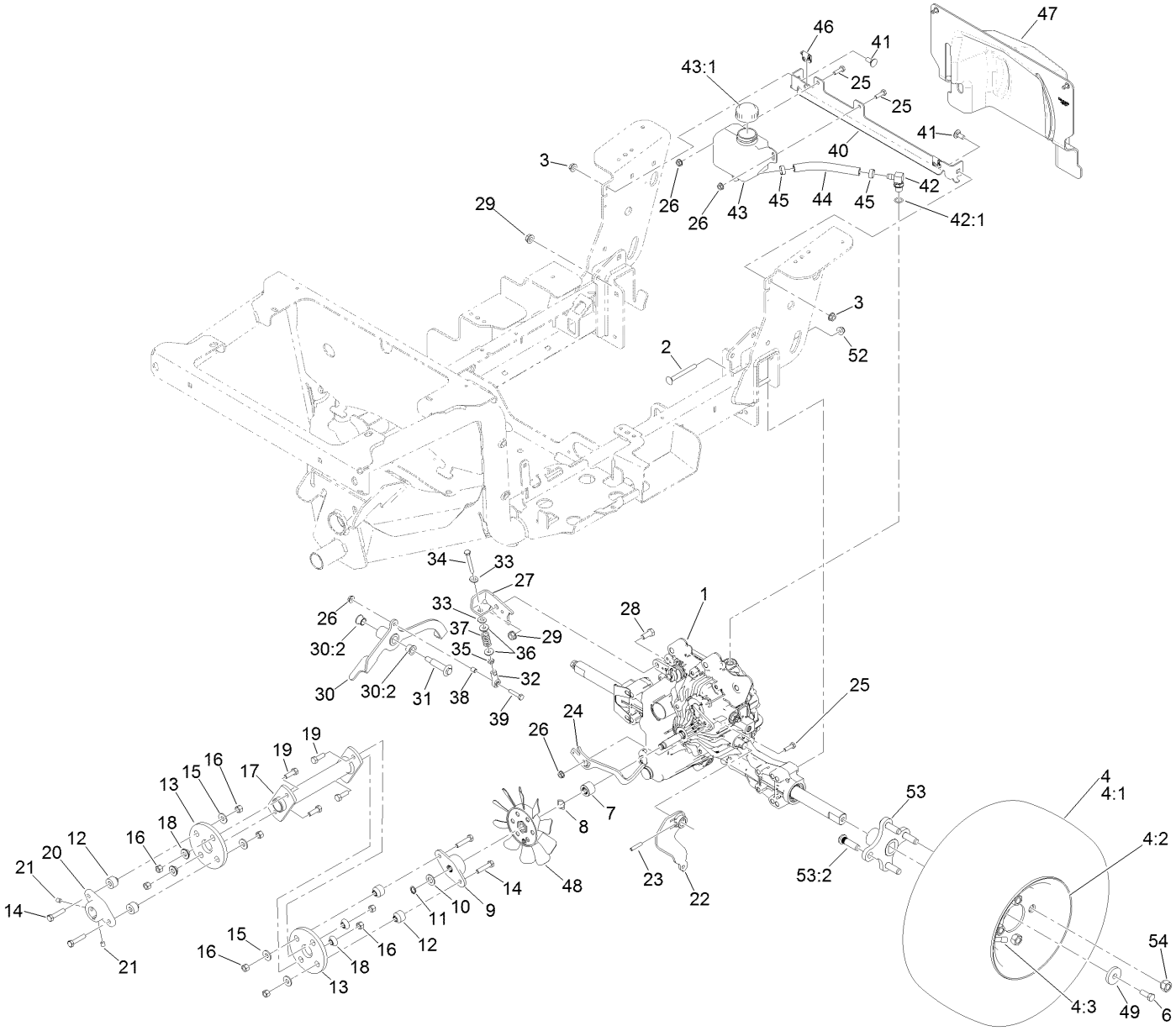

Ground Drive Assembly (continued)

Ref.	Part Number	Qty.	Description
1	126-2814	1	Transaxle
2	3230-26	4	Screw-CARR
3	135-2881	2	Nut-HF
4	135-1898	2	Wheel And Tire ASM (Grey)
4:1	119-8907	1	Tire-4 Ply
4:2	135-1899	1	Wheel (Grey)
4:3	232-27	1	Stem-Valve
4:4	107-2491	1	Tube-Tire ●
6	135-1711	2	Screw-HH
7	126-2983	1	Spacer-Shaft, Input
8	3290-317	1	Washer-Spring
9	116-9787	1	Hub-Shaft, Transaxle
10	605256	1	Spacer
11	32151-61	1	Ring-Retaining
12	27-6590	4	Spacer-Coupling, Rubber
13	115-4523	2	Coupling-Rubber
14	3210-8	4	Screw-HH
15	3256-3	4	Washer-Flat
16	32152-5	8	Nut-Hex
17	126-3838-03	1	Shaft-Drive
18	125-9249	4	Spacer-Coupler, Rubber
19	3210-5	4	Screw-HH
20	116-9788	1	Hub-Shaft, Engine
21	3246-18	2	Setscrew
22	126-6243-03	1	Arm-Motion
23	126-4295	1	Pin-Spiral
24	126-2811-03	1	Arm-Release
25	126-0498	3	Screw-HH
26	135-2880	4	Nut-HF
27	126-3937-03	1	Arm-Brake
28	126-0520	1	Screw-HH
29	135-2882	2	Nut-HF
30	126-0433	1	Brake Lever ASM
30:2	116-4279	2	Bearing-Flange
31	92-1057	1	Bolt-Shoulder
32	2411-41	1	Rod End-Ball Joint
33	1-303334	2	Washer-Spring
34	126-4009	1	Screw-HH
35	3220-1	1	Nut-Jam
36	3256-78	2	Washer-Flat
37	1-323245	1	Spring-Compression
38	612503	1	Spacer
39	321-8	1	Screw-HH
40	126-4423-03	1	Bracket-Mount, Tank
41	126-0695	2	Screw-CARR
42	126-2927	1	Fitting-90 DEG
42:1	237-42	1	O-Ring
43	126-2578	1	Tank ASM
43:1	126-2579	1	Cap-Tank
44	126-2842	1	Hose-Expansion
45	126-3749	2	Clamp
46	119-1730	2	Receptacle-Clip, Mini
47	126-1462	1	Transaxle Cover ASM
48	126-2980	1	Fan-7 Inch
49	1-543610	2	Washer-Clutch
52	104-8300	4	Nut-HF, NI
53	126-9884	2	Wheel Hub ASM
53:2	10-6830	4	Stud-Type, Drive
54	242-50	4	Nut-Lug

● Not illustrated

Transaxle Cover Assembly No. 126-1462

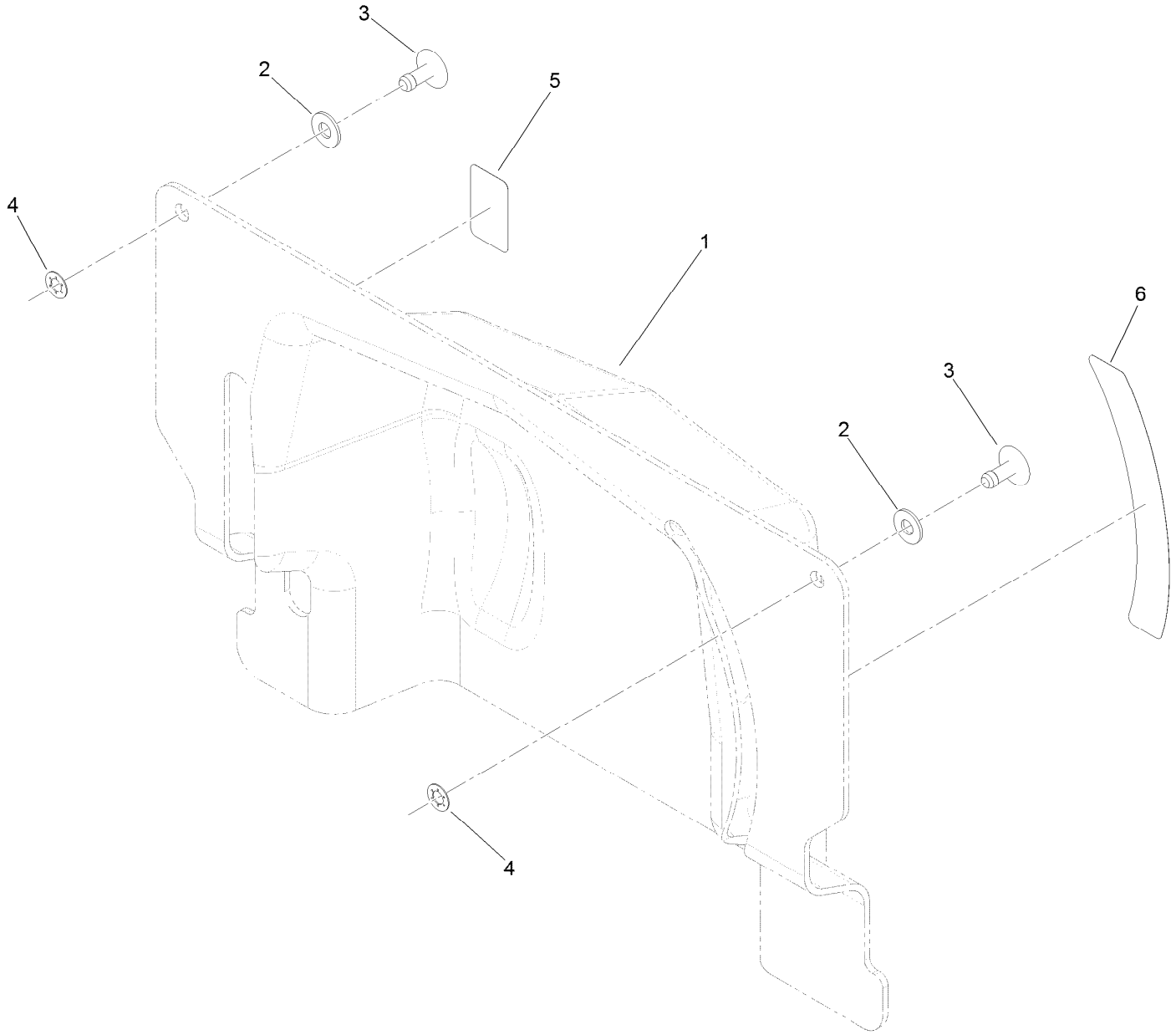

Transaxle Cover Assembly No. 126-1462 (continued)

Ref.	Part Number	Qty.	Description
1		1	Cover-Transaxle ●
2	360-0140	2	Washer-Flat
3	119-1728	2	Stud-1/4 Turn
4	119-1729	2	Retainer-Stud
5	126-2620	1	Decal-Brake, Park
6	126-2621	1	Decal-Release, Drive

● Not serviced separately

Engine Assembly

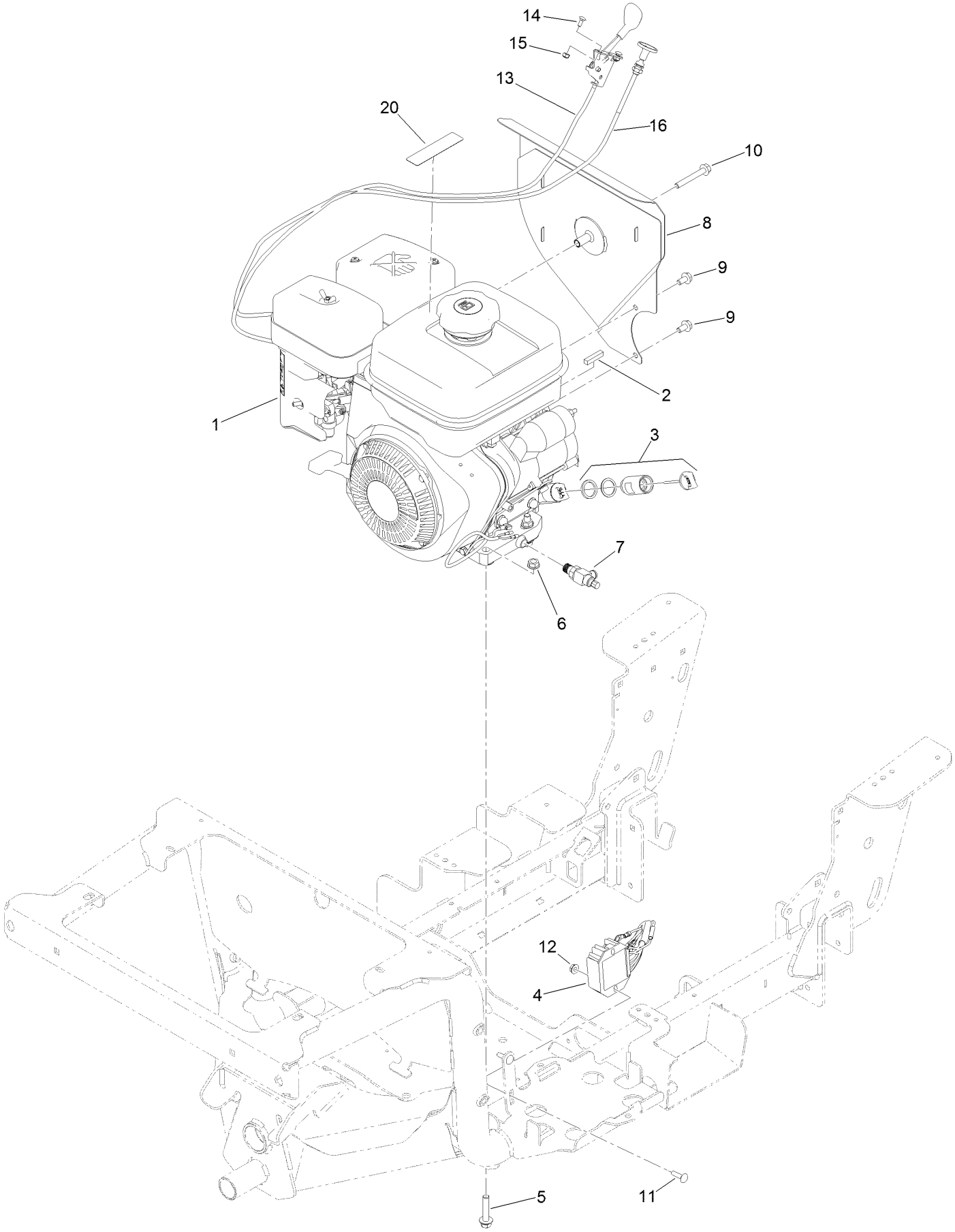

Engine Assembly (continued)

Ref.	Part Number	Qty.	Description
1		1	Engine-Subaru, Ex27 ●
2	126-2532	1	Key-Crankshaft
3	126-1432	1	Extender-Dipstick
4	126-4658	1	Regulator
5	126-2710	4	Screw-HHF
6	135-2882	4	Nut-HF
7	103-6602	1	Valve-Oil Drain
8	126-2426	1	Heat Shield ASM
9	117-1836	2	Screw-HHF, Lock
10	33104-060	1	Screw-HHF
11	126-1455	2	Screw-CARR
12	135-2880	2	Nut-HF
13	126-2240	1	Control-Throttle
14	1-807513	2	Bolt-CARR
15	3296-2	2	Nut-Lock, NI
16	126-2285	1	Cable-Choke, Push/Pull
20	133-8062	1	Decal-Arrestor, Spark

● Not serviced separately

Electrical Assembly

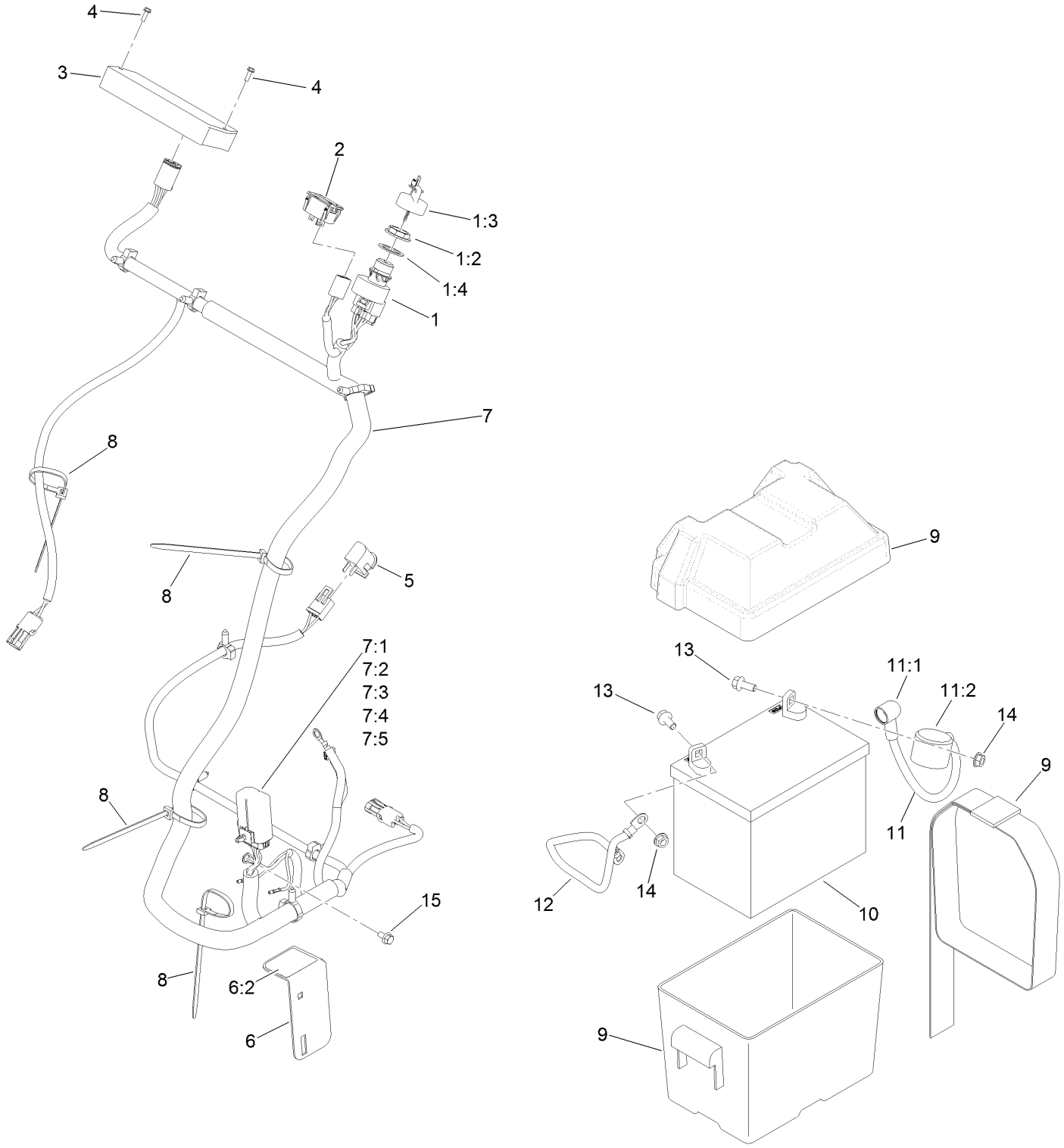

Electrical Assembly (continued)

Ref.	Part Number	Qty.	Description
1	120-3956	1	Ignition Switch ASM
1:2	108-8660	1	Nut-Mounting
1:3	106-5270	1	Ignition Key Set
1:4	108-8659	1	Washer-Backup
2	126-3931	1	Meter-Hour
3	126-6622	1	Controller-DC
4	32144-87	2	Screw-HWHTF
5	82-2190	1	Switch-Bail
6	126-4656	1	Fuse Bracket ASM
6:2	126-4122	1	Decal-Fuse
7	126-3458	1	Harness-Wire ■
7:1	121-8868	2	Fuse-Mini Blade, 20 Amp
7:2	126-3991	1	Relay-Micro
7:3	126-4101	1	Cap-Power Distribution Module
7:4	126-4102	1	Clip-Power Distribution Module
7:5	126-6343	1	Block-Foam
8	1-303335	4	Tie-Plastic
9	126-1424	1	Battery Box
10		1	Battery ●
11	116-4730	1	Cable-Battery, Positive
11:1	1-543393	1	Insulator-Solenoid
11:2	109-2407	1	Insulator-Battery
12	114-9715	1	Cable-Battery, Negative
13	126-2712	2	Screw-HHF
14	135-2881	2	Nut-HF
15	33103-012	1	Screw-HHF

● Not serviced separately
■ Use dielectric grease on all unsealed connectors and terminals only. Do not apply in sealed connectors.

Spray System Assembly

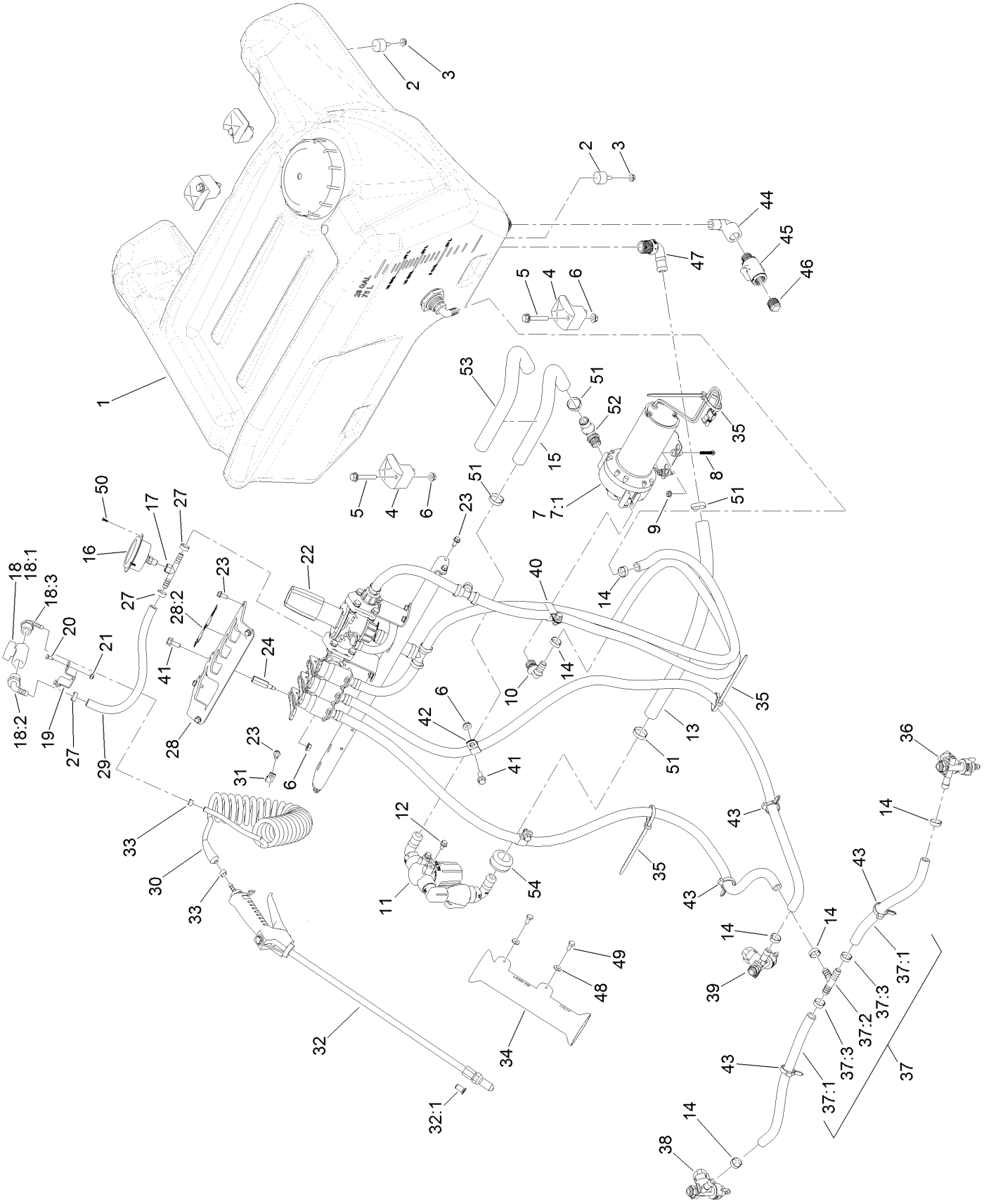

Spray System Assembly (continued)

Ref.	Part Number	Qty.	Description
1	126-0286	1	Tank-Sprayer
2	1-523420	4	Bumper
3	135-2880	5	Nut-HF
4	107-4543	4	Clamp
5	126-2711	4	Screw-HHF
6	135-2881	7	Nut-HF
7	135-2559	1	Pump-Diaphragm, 3.8 GPM
7:1	135-2477	1	Kit-Diaphram Pump
8	692501	4	Screw-SHWH
9	126-2645	4	Nut-HF
10	126-0961	1	Fitting-Elbow, Barbed
11	126-4358	1	Strainer ASM
12	126-2713	2	Screw-HHF
13	126-4422	1	Hose-Water
14	126-4778	6	Clamp
15	126-4637	1	Hose-Water
16	126-4110	1	Gauge-Pressure
17	126-2348	1	Fitting-Tee
18		1	Wand Control ASM ●
18:1	126-0242	1	Valve-Ball
18:2	126-4992	1	Fitting-Elbow-90
18:3	126-4993	1	Fitting-Elbow-90
19	126-0239-03	1	Bracket-Valve
20	1-807513	2	Bolt-CARR
21	3296-2	2	Nut-Lock, NI
22		1	Control Valve Manifold ASM ●
23	32144-10	9	Screw-HWH
24	126-4914	1	Spacer-Mount, Manifold
27	126-3749	3	Clamp
28	126-4180	1	Cover-Controls
28:2	126-4161	1	Decal-Control, Lever

Ref.	Part Number	Qty.	Description
29	126-5847	1	Hose-Water, 3/8 Pvc Red
30	126-1493	1	Hose-Coiled
31	2412-89	1	Clamp-R
32	126-8000	1	Spray Wand ASM
32:1	126-3943	1	Strainer-Nozzle, 50M 5PSI Check
33	126-2707	2	Clamp
34	126-3987	1	Holder-Wand
35	1-303335	5	Tie-Plastic
36	126-3667	1	Left Nozzle Sub ASM
37	126-2252	1	Hose ASM
37:1	126-2264	2	Hose-Water
37:2	126-0968	1	Fitting-Tee
37:3	126-4778	2	Clamp
38	126-3669	1	Right Nozzle Sub ASM
39	126-3668	1	Center Nozzle Sub ASM
40	120-1959	1	Clamp
41	126-2712	4	Screw-HHF
42	1-633396	2	Clip-Loom
43	105-1853	4	Clamp-Hose
44	108-3573	1	Elbow-90 DEG
45	126-1494	1	Microvalve
46	363-3125	1	Plug
47	119-0490	1	Elbow-Hosebarb
48	360-0140	2	Washer-Flat
49	126-1290	2	Screw-HH
50	363-8552	3	Screw-TAP
51	126-4779	6	Clamp
52	126-4420	1	Fitting-Elbow
53	126-5065	1	Sleeve-Corrugated, Split
54	126-7410	1	Grommet

● Not serviced separately

Sprayer Tank Assembly No. 126-0286

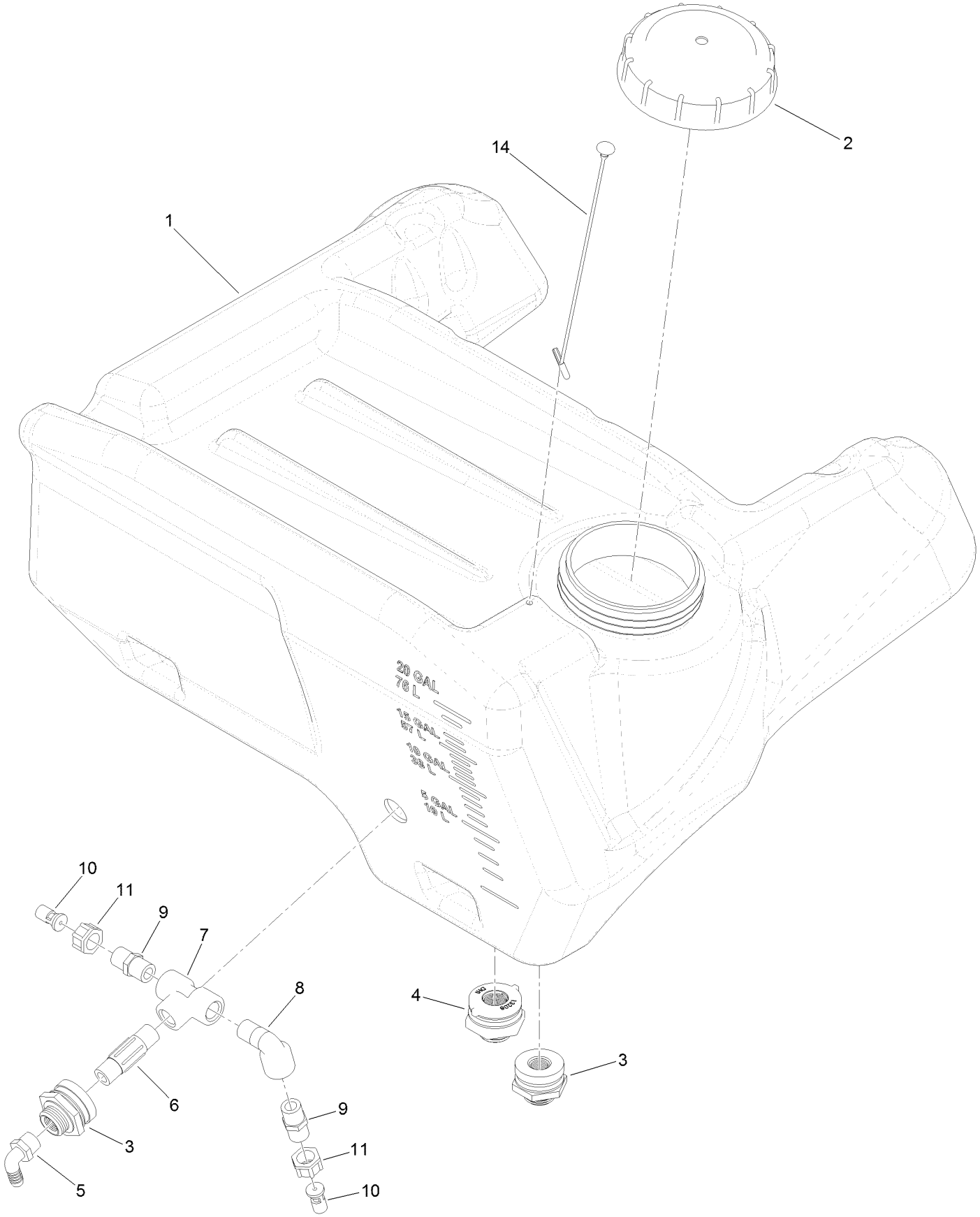

Sprayer Tank Assembly No. 126-0286 (continued)

Ref.	Part Number	Qty.	Description
1		1	Tank-Sprayer ●
2	126-0285	1	Cap-Water, 5 Inch Vent
3	126-0400	2	Fitting-Bulkhead
4	126-4393	1	Fitting-Bulkhead
5	42046	1	Elbow-90 DEG
6	94-7103	1	Nipple
7	94-7100	1	Tee
8	108-3573	1	Elbow-90 DEG
9	108-3574	2	Nipple-Short
10	100-6705	2	Nozzle-Agitation
11	99-0766	2	Nut
14	126-3381	1	Lanyard-Cap, Self Anchoring (12 Inch)

● Not serviced separately

Strainer Assembly No. 126-4358

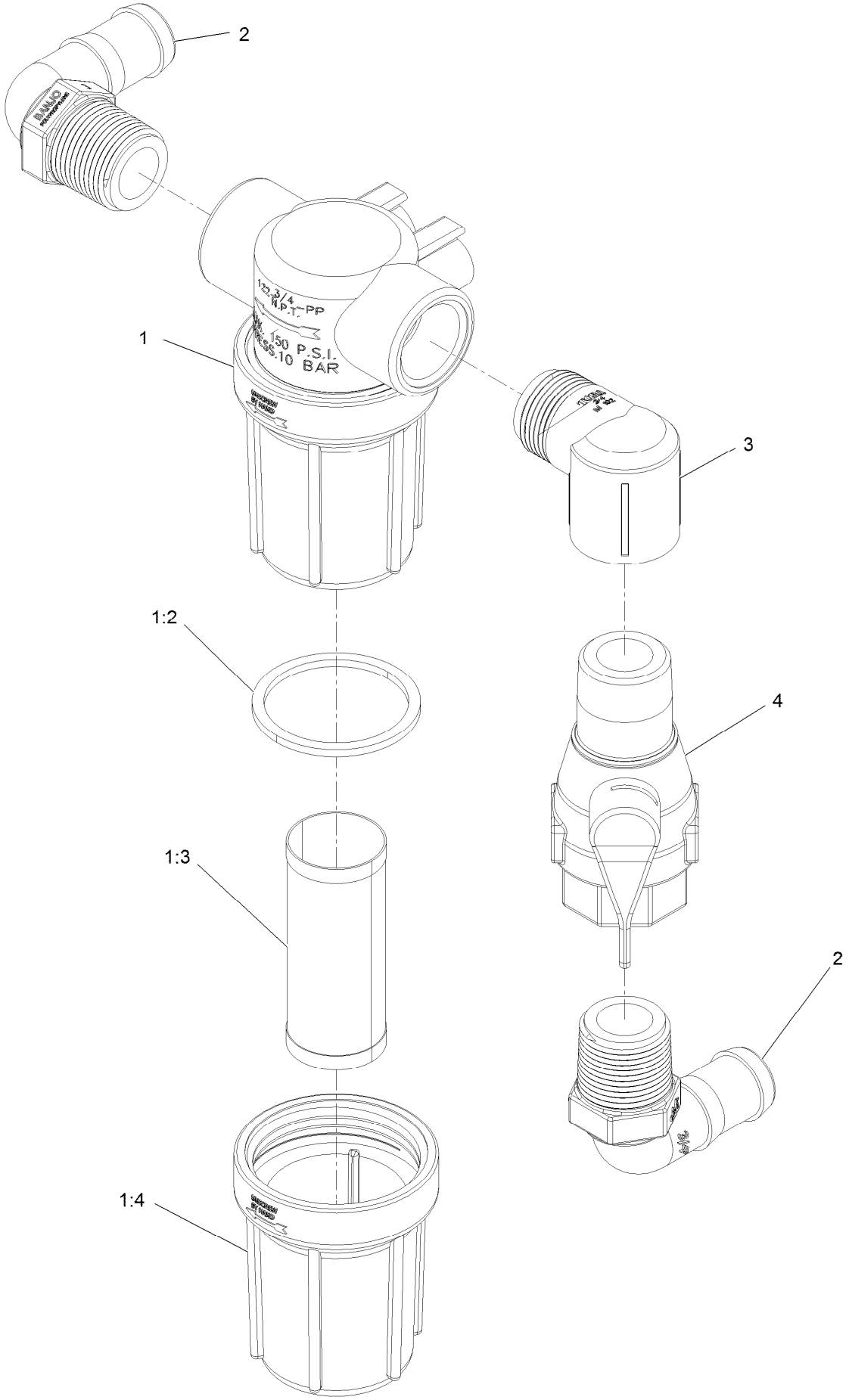

Strainer Assembly No. 126-4358 (continued)

Ref.	Part Number	Qty.	Description
1	126-4374	1	Strainer-Line
1:2	126-2272	1	Gasket-Head, Line Strainer
1:3	126-2273	1	Screen-Strainer, 30 Mesh SS
1:4	126-7195	1	Bowl-Strainer
2	119-0490	2	Elbow-Hosebarb
3	102-4272	1	Elbow
4	126-4451	1	Valve-Ball

Control Valve Manifold Assembly

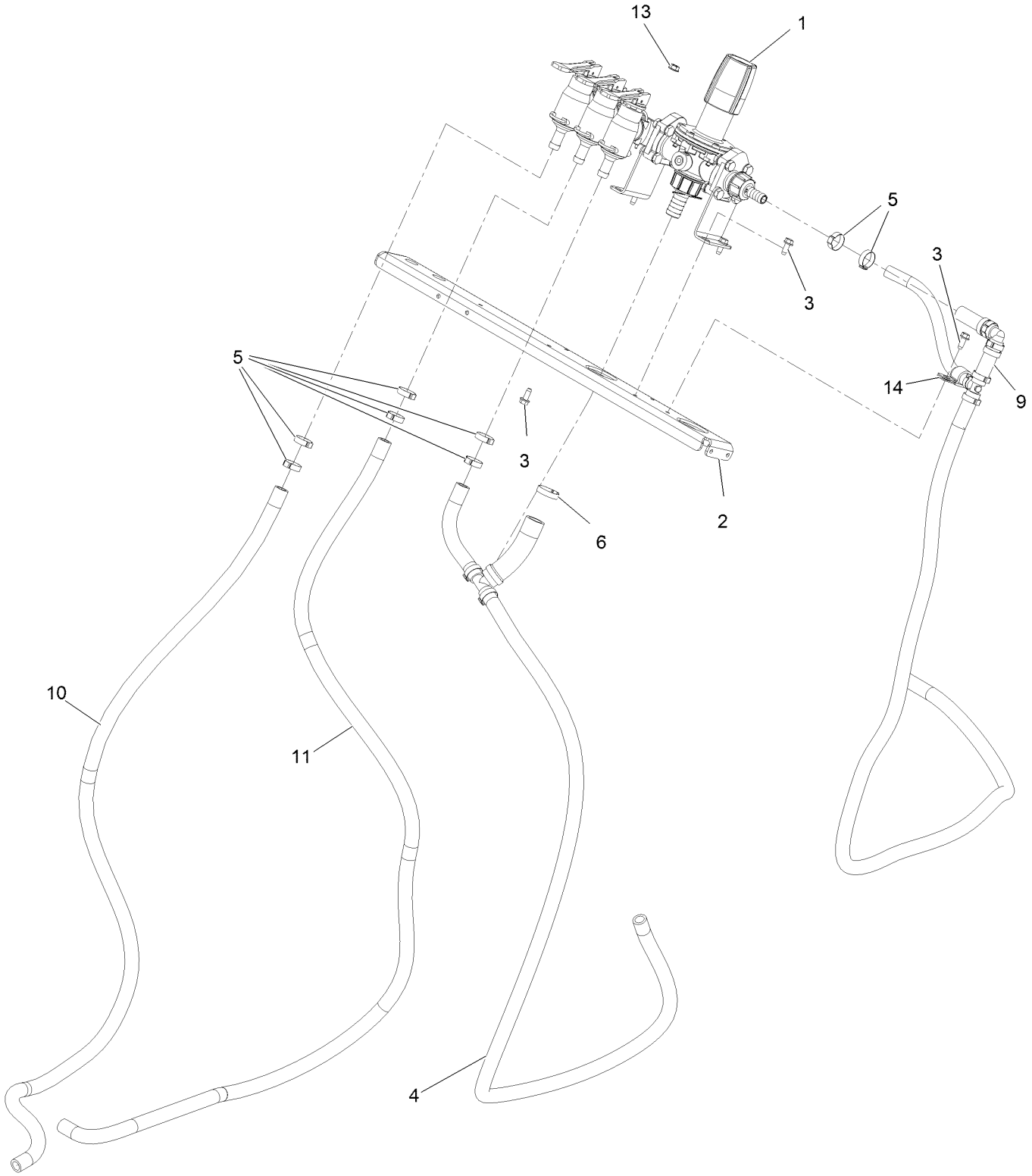

Control Valve Manifold Assembly (continued)

Ref.	Part Number	Qty.	Description
1	126-7635	1	Spray Manifold Assembly
2	126-7302-03	1	Crossmember-Column
3	32144-10	5	Screw-HWH
4	126-2250	1	Hose ASM
5	126-4778	8	Clamp
6	126-4779	1	Clamp
9	126-7304	1	Hose ASM
10	126-2263	1	Hose-Water
11	126-2261	1	Hose-Water
13	135-2880	1	Nut-HF
14	1-633396	1	Clip-Loom

Spray Manifold Assembly No. 126-7635

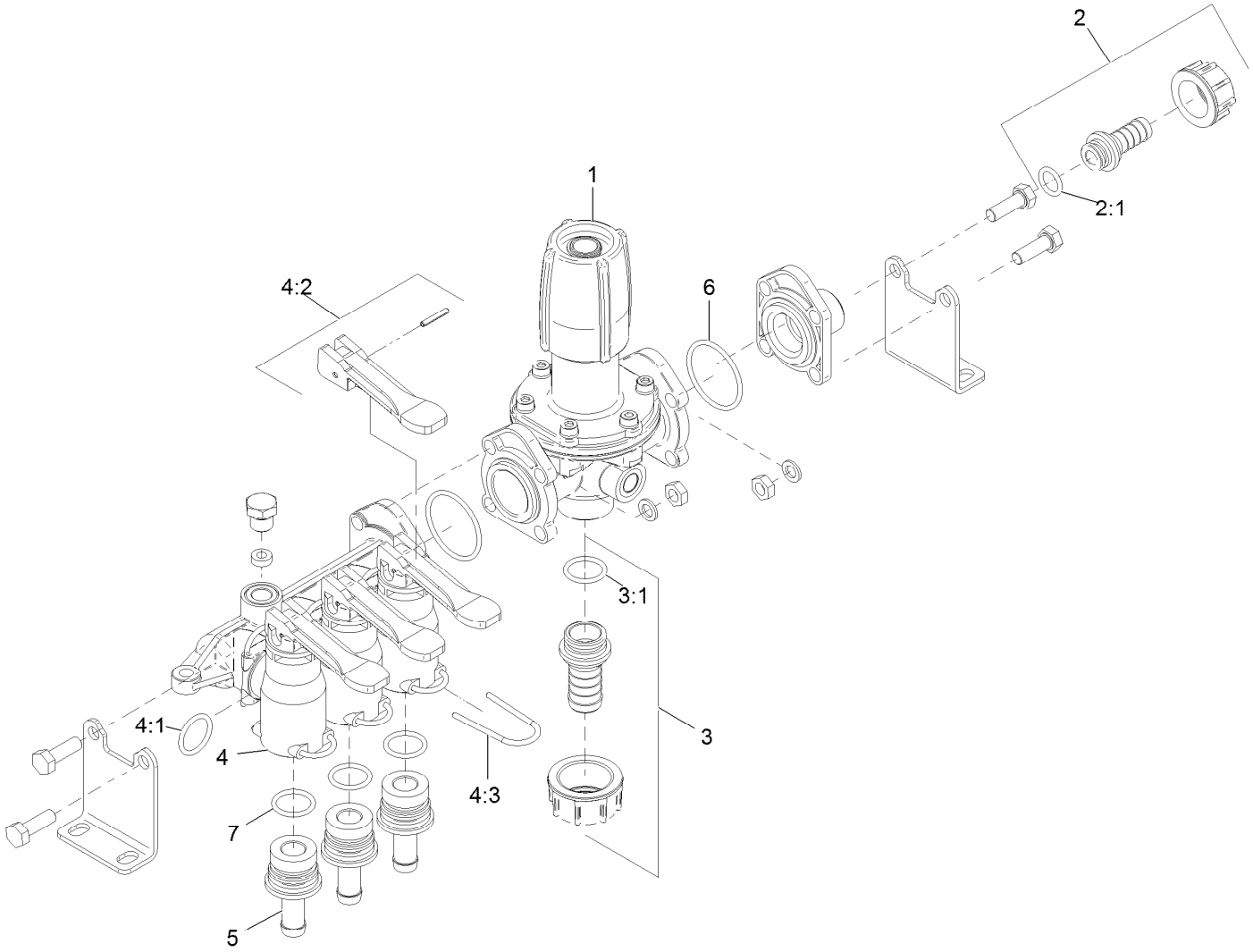

Spray Manifold Assembly No. 126-7635 (continued)

Ref.	Part Number	Qty.	Description
1	126-6303	1	Regulator
2	126-6304	1	Flynut Assembly
2:1	126-6322	1	O-Ring Kit, Regulator Inlet Barb
3	126-6317	1	Flynut Assembly
3:1	126-6323	1	O-Ring Kit, Regulator Outlet Barb
4	126-7641	1	Valve Assembly W/ O-Ring
4:1	126-6328	1	O-Ring Kit, Valve Inlet
4:2	126-6319	1	Lever And Pin Assembly
4:3	126-6332	1	Wireform Retainer Kit
5	126-6321	1	Hose Barb
6	126-6326	1	O-Ring Kit, Regulator Flange
7	126-6327	1	O-Ring Kit, Valve Outlet Barb

Hose Assembly No. 126-2250

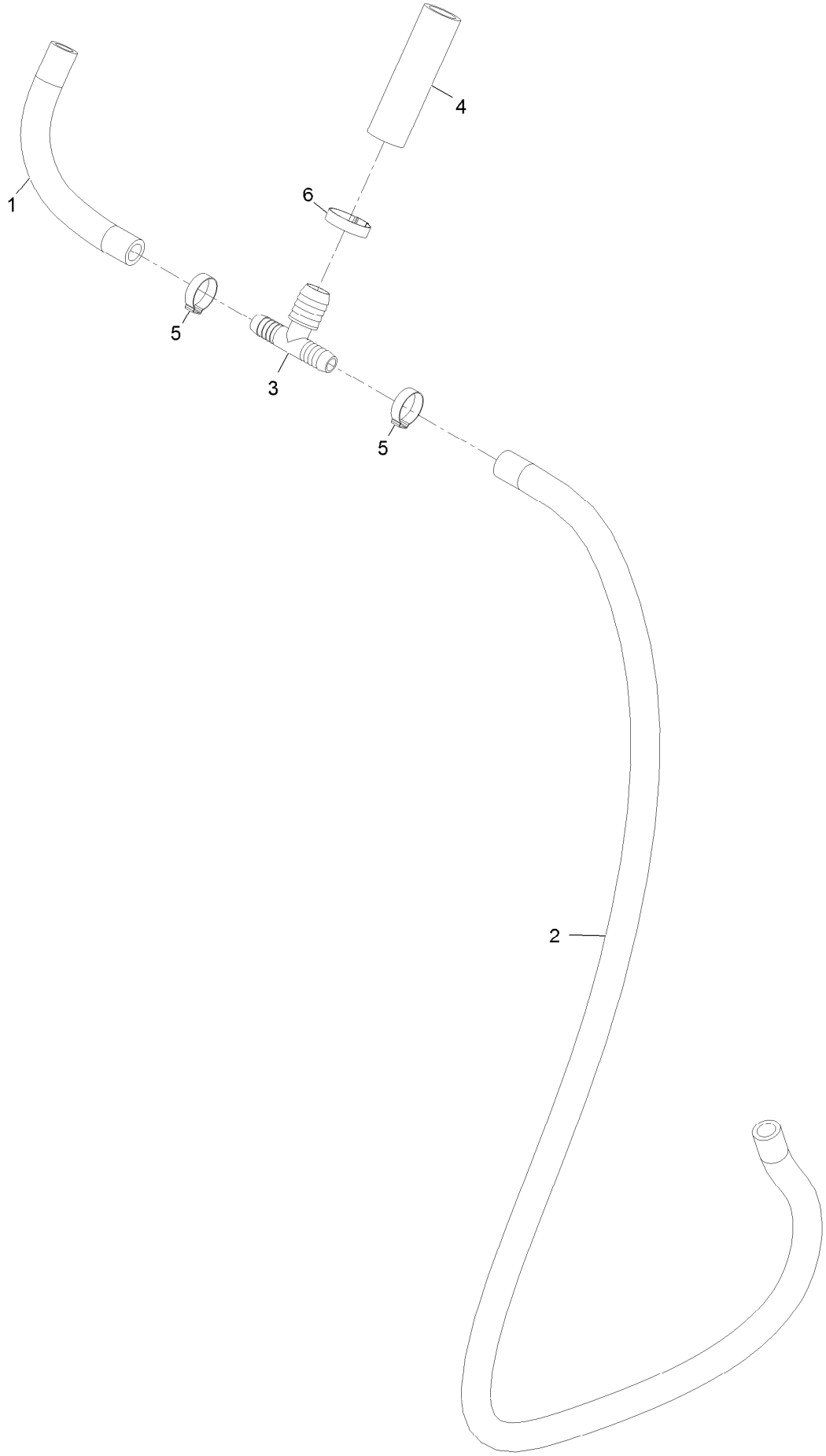

Hose Assembly No. 126-2250 (continued)

Ref.	Part Number	Qty.	Description
1	126-2257	1	Hose-Water
2	126-2259	1	Hose-Water
3	126-0969	1	Fitting-Tee
4	126-0865	1	Hose-Water
5	126-4778	2	Clamp
6	126-4779	1	Clamp

Hose Assembly No. 126-7304

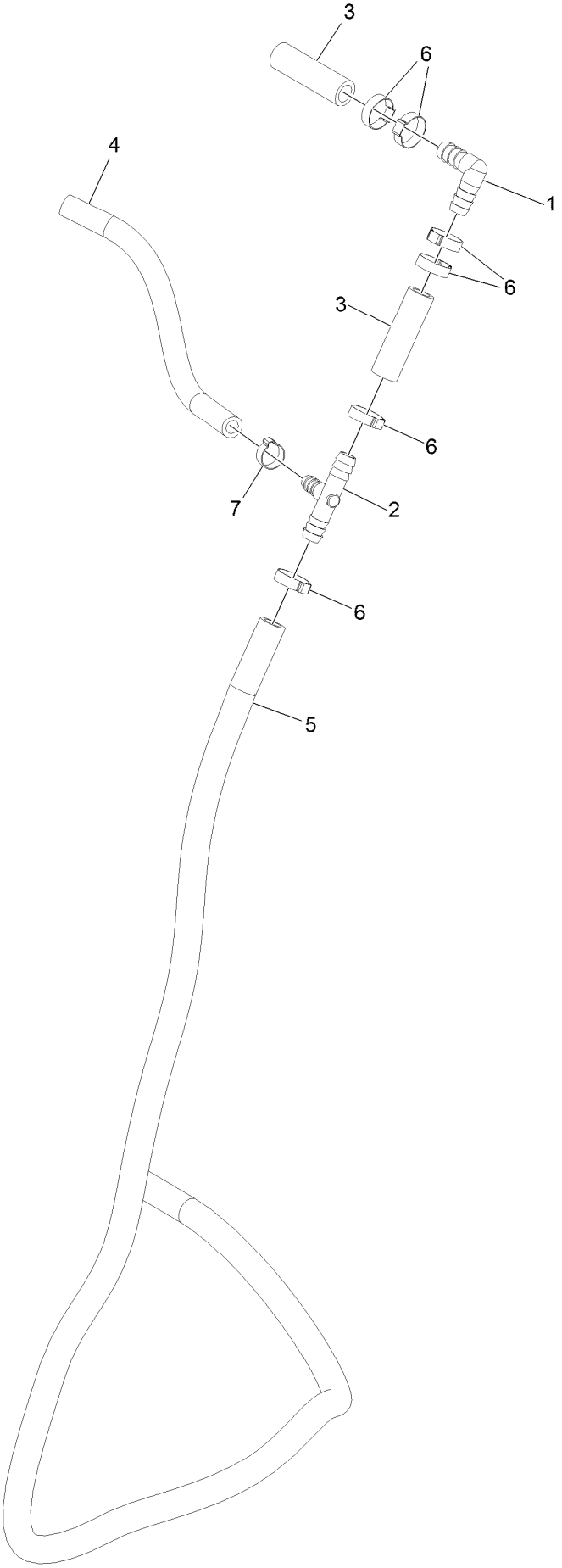

Hose Assembly No. 126-7304 (continued)

Ref.	Part Number	Qty.	Description
1	126-1001	1	Fitting-Elbow-90
2	99-7371	1	Connector-Tee
3	126-7231	2	Hose-Water
4	126-7307	1	Hose-Water
5	126-7306	1	Hose-Water
6	126-4778	6	Clamp
7	126-3749	1	Clamp

Left Nozzle Assembly No. 126-3667

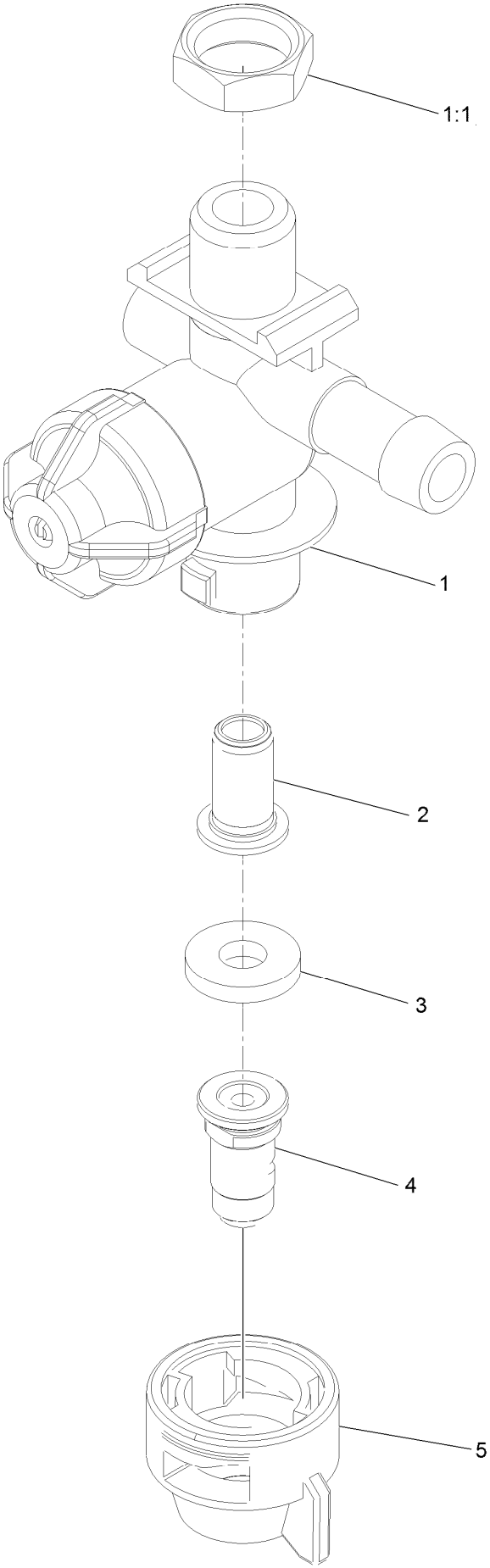

Left Nozzle Assembly No. 126-3667 (continued)

Ref.	Part Number	Qty.	Description
1	116-9790	1	LH Nozzle Body ASM
1:1	126-2801	1	Nut-Nylon
2	126-1212	1	Strainer-Tip
3	116-9797	1	Gasket-Seal
4	116-9798	1	Nozzle-Spray, White
5	116-9796	1	Cap-Nozzle
99	126-7172	1	Nozzle-Spray, Blue ●■
99	126-7171	1	Nozzle-Spray, Brown ●■
99	126-7170	1	Nozzle-Spray, Gray ●■
99	126-2566	1	Nozzle-Spray, Red ●■

● Not illustrated

■ Sold separately

Right Nozzle Assembly No. 126-3669

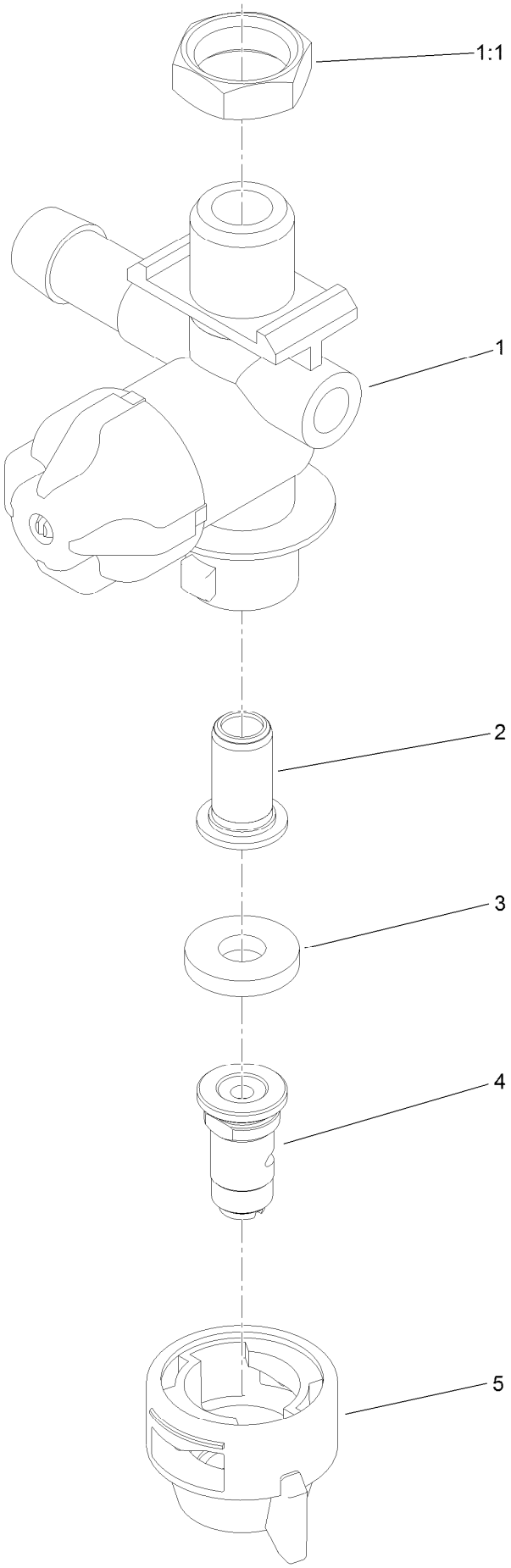

Right Nozzle Assembly No. 126-3669 (continued)

Ref.	Part Number	Qty.	Description
1	116-9791	1	RH Nozzle Body ASM
1:1	126-2801	1	Nut-Nylon
2	126-1212	1	Strainer-Tip
3	116-9797	1	Gasket-Seal
4	116-9798	1	Nozzle-Spray, White
5	116-9796	1	Cap-Nozzle
99	126-7172	1	Nozzle-Spray, Blue ●
99	126-7171	1	Nozzle-Spray, Brown ●
99	126-7170	1	Nozzle-Spray, Gray ●
99	126-2566	1	Nozzle-Spray, Red ●

● Not illustrated

Center Nozzle Assembly No. 126-3668

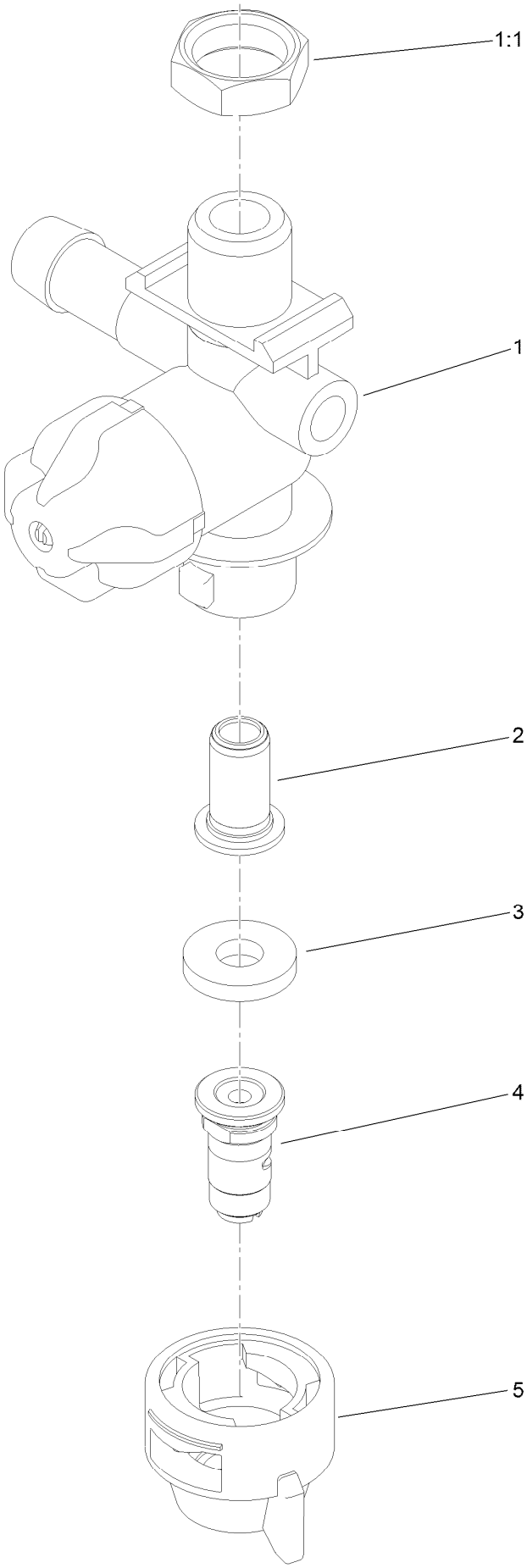

Center Nozzle Assembly No. 126-3668 (continued)

Ref.	Part Number	Qty.	Description
1	116-9791	1	RH Nozzle Body ASM
1:1	126-2801	1	Nut-Nylon
2	126-1212	1	Strainer-Tip
3	116-9797	1	Gasket-Seal
4	126-2566	1	Nozzle-Spray, Red
5	116-9796	1	Cap-Nozzle
99	126-7170	1	Nozzle-Spray, Gray ●■
99	116-9798	1	Nozzle-Spray, White ●■
99	126-7171	1	Nozzle-Spray, Brown ●■
99	126-7172	1	Nozzle-Spray, Blue ●■

● Not illustrated

■ Sold separately

Spreader Assembly

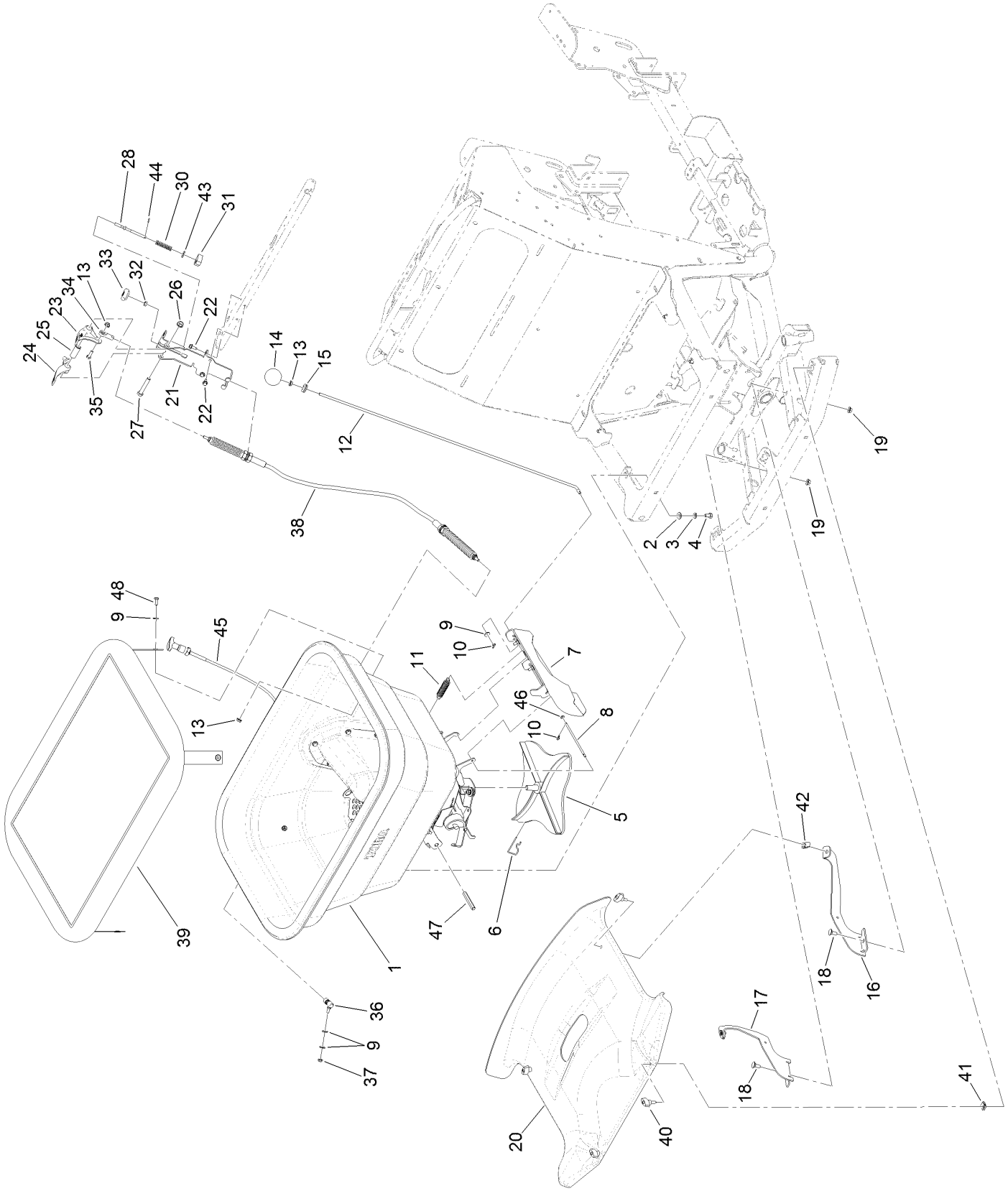

Spreader Assembly (continued)

Ref.	Part Number	Qty.	Description
1		1	Spreader Hopper ASM ●
2	107-0279	4	Washer
3	107-0280	4	Washer-Lock
4	126-2506	4	Screw-HH
5	126-0858	1	Spinner-Spreader
6	126-1246	1	Clip-Spinner
7		1	Side Deflector ASM ●
8	135-2558	1	Pin-Deflector
9	360-0140	9	Washer-Flat
10	126-1631	2	Pin-Cotter, Hair
11	126-2127	1	Spring-Extension
12	126-2190	1	Rod-Control, Deflector
13	135-2880	6	Nut-HF
14	121-1877	1	Knob-Rate, Flow
15	1-633630	1	Grommet
16	126-2145	1	Bracket-Cover, Front (LH)
17	126-2146	1	Bracket-Cover, Front (RH)
18	126-0695	2	Screw-CARR
19	135-2881	2	Nut-HF
20	126-2063	1	Cover-Front, Spreader/Sprayer
21	126-3133	1	Mount-Handle
22	32144-10	3	Screw-HWH
23	126-3947	1	Lever-Spread, Wide
24	126-3948	1	Lever-Spread, Narrow
25	126-3984	1	Spacer
26	135-2882	1	Nut-HF
27	323-11	1	Screw-HH
28	126-3929	1	Link-Adjust, Narrow
30	125-0547	1	Spring-Compression, Bail
31	126-3147	1	Stop-Spread, Narrow
32	126-4891	1	Nut-Coupler
33	126-3905	1	Knob
34	2411-41	1	Rod End-Ball Joint
35	126-0498	1	Screw-HH
36	126-2005	1	Ball-Joint
37	126-2725	1	Nut-Hex, NI
38	126-1783	1	Cable
39	126-2815	1	Cover-Hopper
40	126-5846	4	Knob-T
41	126-3740	2	Nut-Retainer, U Style
42	126-3739	2	Nut-Retainer
43	3256-78	1	Washer-Flat
44	3272-5	1	Pin-Cotter
45	126-4150	1	Cable-Control, Turn Lock
46	126-0759	1	Washer-Flat
47	126-4655	1	Post-Hex, Diffuser Guide
48	126-1290	4	Screw-HH

● Not serviced separately

Spreader Hopper Assembly

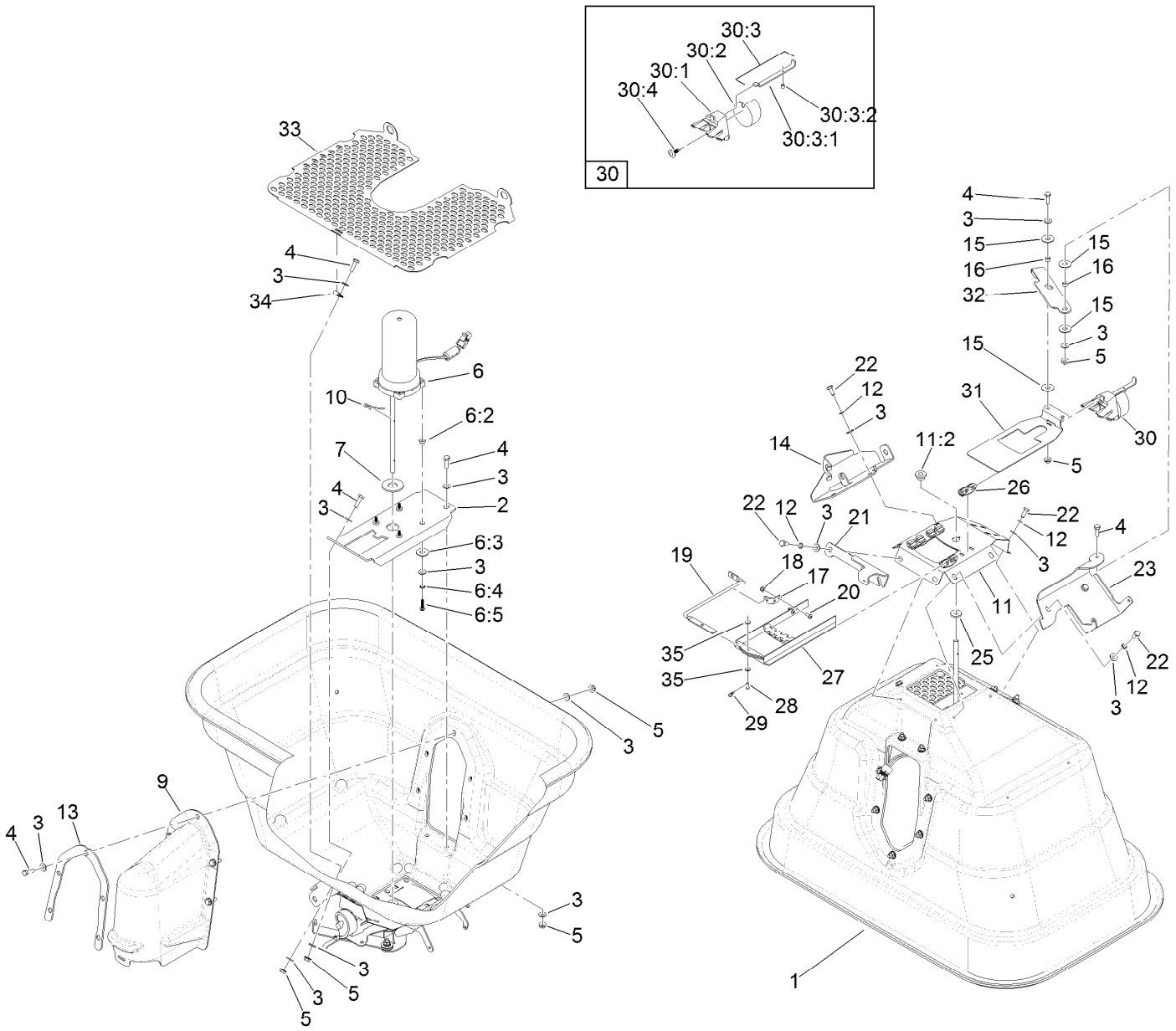

Spreader Hopper Assembly (continued)

Ref.	Part Number	Qty.	Description
1	135-1560	1	Hopper-Spreader
2	126-4245	1	Bracket-Mount, Motor
3	360-0140	34	Washer-Flat
4	126-0498	12	Screw-HH
5	135-2880	12	Nut-HF
6	126-6231	1	Spreader Motor ASM
6:2	135-3989	4	Spacer-Flanged
6:3	360-0140	4	Washer-Flat
6:4	363-8641	4	Washer-Lock, Int
6:5	739001	4	Screw-SHWH
7	83-2400	1	Spacer
9	126-1348	1	Cover-Motor
10	126-1247	1	Agitator
11	126-6284	1	Mulch Plate W/ Bearing ASM
11:2	126-0984	1	Bearing-Bottom, Hopper
12	363-8641	12	Washer-Lock, Int
13	126-6334	1	Flange-Cover, Motor
14	126-4650	1	Bracket-Hopper, Gate Controls
15	93-1633	4	Washer
16	126-3684	2	Spacer
17	126-1237	1	Bracket-Diffuser
18	364-0371	2	Nut-Hex
19	126-1646	1	Rod-Control, Diffuser
20	126-9586	2	Screw-PPH
21	126-2082	1	Bracket-Spring, Hopper Deflector
22	126-1290	8	Screw-HH
23	126-1916	1	Bracket-Lever, Hopper Gate
25	126-1252	1	Washer-Felt
26	126-0990	4	Guide-Rate, Gate
27	126-0991	1	Diffuser
28	126-3729	1	Pin-Clevis
29	126-1631	1	Pin-Cotter, Hair
30	126-0998	1	Rate Dial ASM
30:1	126-0985	1	Mount-Dial
30:2	126-0988	1	Dial
30:3		1	Rate Gate Link ASM ●
30:3:1	126-0987	1	Link-Gate, Rate
30:3:2	126-4196	1	Screw-Shoulder, Slotted
30:4	126-0986	1	Clip
31	126-1903	1	Gate-Rate
32	126-4112	1	Lever-Gate
33	126-3143	1	Screen-Hopper, Large Hole
33	126-3240	1	Screen-Hopper, Medium Hole
33	126-3242	1	Screen-Hopper, Small Hole
34	126-1624	1	Clamp-Loop
35	126-0759	2	Washer-Flat

● Not serviced separately

Side Deflector Assembly

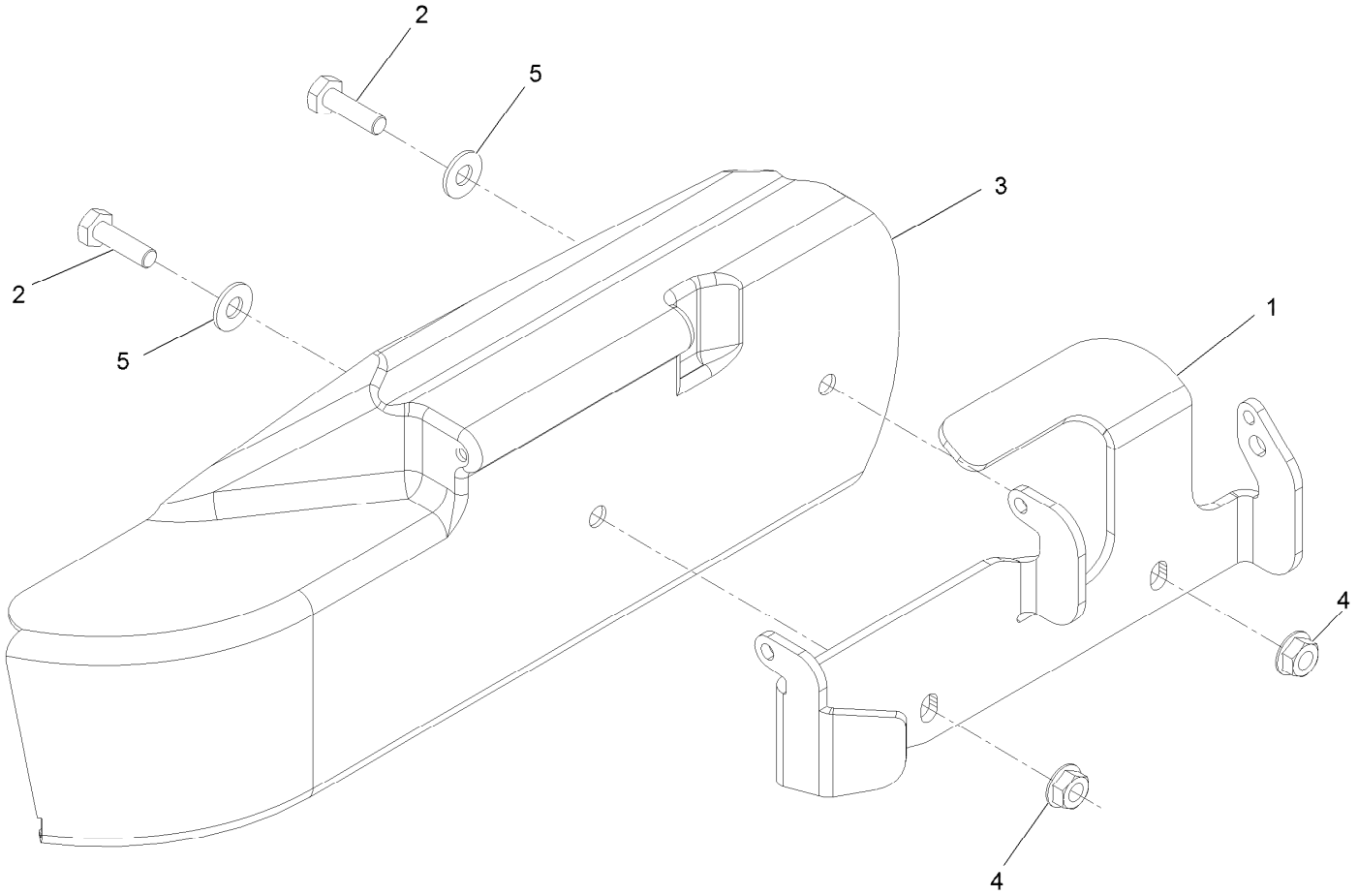

Side Deflector Assembly (continued)

Ref.	Part Number	Qty.	Description
1	135-2501	1	Bracket-Deflector, Side
2	126-0498	2	Screw-HH
3	126-1217	1	Deflector-Side
4	135-2880	2	Nut-HF
5	360-0140	2	Washer-Flat

Notes:

Notes:

TORO®

Count on it.