Form No. 3323–239

TORO®

Wheel Horse®

48” Snow Blade

for Lawn and Garden Tractors

Model 79253–200000001 & Up

PROTOTYPE

Operator’s Manual

Introduction

We want you to be completely satisfied with your new product, so feel free to contact your local Authorized Service Dealer for help with service, genuine replacement parts, or other information you may require.

Whenever you contact your Authorized Service Dealer or the factory, always know the model and serial numbers of your product. These numbers will help the Service Dealer or Service Representative provide exact information about your specific product. You will find the model and serial number plate located in a unique place on the product as shown below.

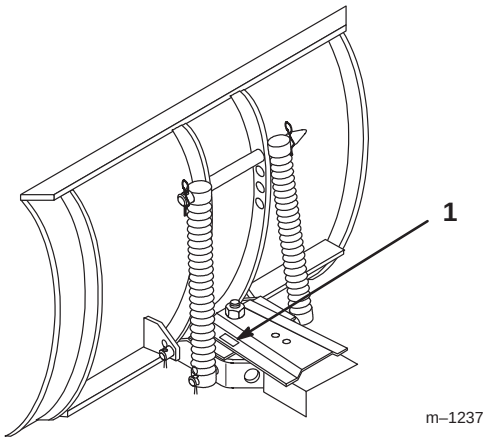

1. Model and Serial Number Plate

For your convenience, write the product model and serial numbers in the space below.

Model No: _____

Serial No. _____

The warning system in this manual identifies potential hazards and has special safety messages that help you and others avoid personal injury, even death. DANGER, WARNING and CAUTION are signal words used to identify the level of hazard. However, regardless of the hazard, be extremely careful.

DANGER signals an extreme hazard that will cause serious injury or death if the recommended precautions are not followed.

WARNING signals a hazard that may cause serious injury or death if the recommended precautions are not followed.

CAUTION signals a hazard that may cause minor or moderate injury if the recommended precautions are not followed.

Two other words are also used to highlight information. “Important” calls attention to special mechanical information and “Note” emphasizes general information worthy of special attention.

The left and right side of the machine is determined by sitting on the seat in the normal operator’s position.

PROTOTYPE

© The Toro Co. – 1999

Printed in USA

Contents

	Page
Installation	2
Loose Parts	2
Assemble Blade	3
Tractor Set-Up	4
Installing Blade to Tractor	5
Removing the Blade	7
Operation	9
Attachment Power Lift	9
Attachment Lift Lever	10
Adjusting Dial-A-Height	10
Adjusting Blade Index	11
Adjusting Blade Trip Springs	11
Tips for Using Snow Blade	12
Maintenance	13
Service Interval Chart	13
Greasing and Lubrication	14
Reversing the Scraper Blade	15
Storage	15

PROTOTYPE

Installation

Loose Parts

Note: Use the chart below to identify parts used for assembly.

DESCRIPTION	QTY.	USE
Blade assembly	1	Assemble blade to frame
Rod	1	
Control rod	1	
Cotter pin 1/8 x 1” (25 mm)	2	
Frame assembly	1	
Bolt 3/4–16 x 3-3/4” (95 mm)	1	
Locknut 3/4”	1	
Front hitch assembly	1	Install front hitch to tractor
Carriage bolt 3/8–16 x 1” (25 mm)	4	
Locknut 3/8”	4	
Rear hitch assembly	1	Install rear hitch to tractor
Bolt 1/2–13 x 1-1/4” (32 mm)	3	
Locknut 1/2”	3	
Lift plate	1	Install lift plate and lift rod
Trunnion	1	
Lift rod	1	
Washer 9/16”	1	
Hairpin cotter–large	1	
Hairpin cotter–medium	1	
Spindle stop	2	Install steering spindle stop
Self tapping bolt 5/16–18 x 3/4” (19 mm)	2	
Index handle assembly	1	Assemble index handle and control rod to frame
Pivot bolt, 1/2-13 x 1” (25 mm)	1	
Jam nut, 1/2”	1	
Hairpin cotter–large	1	
Operator’s Manual	1	Read before operating
Registration Card	1	Fill out and return to Toro

PROTOTYPE

Assemble Blade

1. Lift and rotate channel and trip spring assembly so holes align with lower blade mounts. Slide rod through holes and secure with (2) 1/8 x 1” (25 mm) cotter pins (Fig. 1).

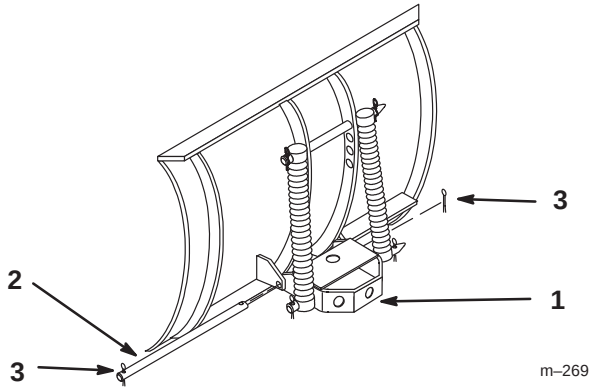

Figure 1

1. Channel
2. Rod
3. Cotter pin 1/8 x 1” (25 mm)

2. Insert the control rod (end without the washer welded on) in 1/2” (13 mm) hole in bottom plate of channel. Secure control rod with a 1/8 x 1” (25 mm) cotter pin between plates (Fig. 2).

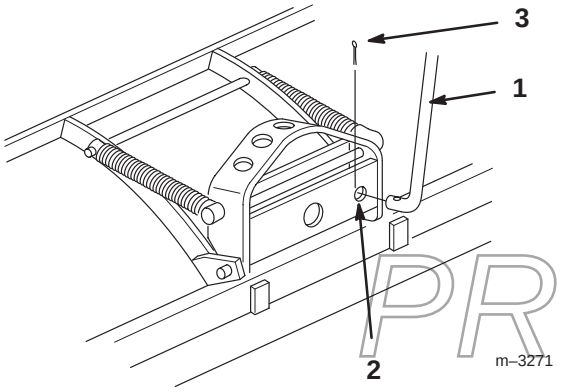

Figure 2

1. Control rod
2. Channel–1/2” (13 mm) hole
3. Cotter pin 1/8 x 1” (25 mm)

3. Apply general purpose grease to the pivot area of frame and channel. Slide channel between frame mount and secure with 3/4–16 x 3-3/4” (95 mm) bolt, up from the bottom, and 3/4” locknut (Fig. 3).

IMPORTANT: Do not tighten nut and bolt excessively to cause binding on channel as it pivots side-to-side.

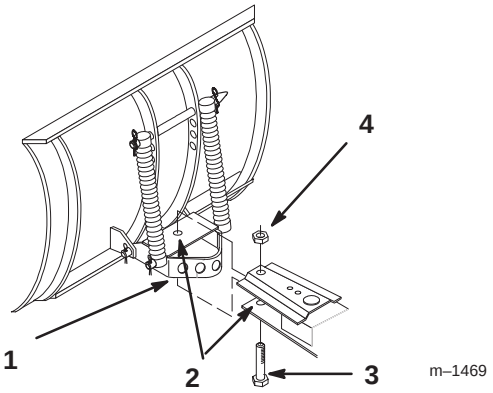

Figure 3

1. Channel
2. Grease here
3. Bolt 3/4–16 x 3-3/4” (95 mm)
4. Locknut 3/4”

PROTOTYPE

Tractor Set-Up

Install Front Hitch

1. Remove E–ring and all washers except one thick washer from tractor front axle pivot pin. Discard unused washers. (Fig. 4). Remove muffler shield.

2. Install (4) 3/8–16 x 1” (25 mm) carriage bolts into keyhole slots in axle bracket. Install muffler shield and place front hitch onto the tractor securing with (4) 3/8” locknuts and previously removed E-ring (Fig. 4).

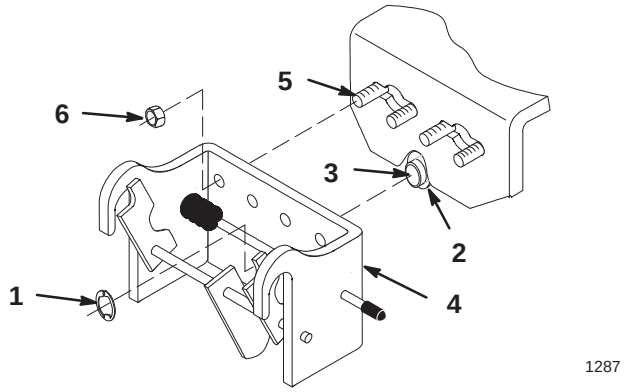

Figure 4

1. E-ring
2. Thick Washer (existing)
3. Axle pivot
4. Front hitch
5. Carriage bolt 3/8–16 x 1” (25 mm)
6. Locknut 3/8”

Install Rear Hitch

1. Install rear mounting plate\blade bracket assembly under and inside rear frame member with short tongue rearward (Fig. 5).

2. Secure with (3) 1/2 x 1-1/4” bolts and 1/2”lock nuts at holes in frame side members and tractor hitch forward hole (Fig. 5).

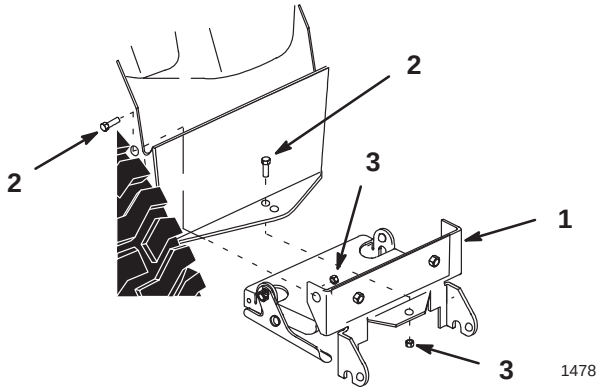

Figure 5

1. Plate\blade bracket assembly
2. Bolt 1/2 x 1-1/4”
3. Lock nut 1/2”

PROTOTYPE

Installing Blade to Tractor

Install Blade Assembly

1. Position blade on a level surface with space behind for tractor.

2. Park the tractor over blade, with frame between wheels. Set the parking brake, and turn the ignition key to “OFF” to stop the engine. Remove the ignition key.

3. Open the latch levers on the rear attachment plate and lift the frame to position the frame mount into the open slots. Close the latch levers and secure with 1/4 x 3/4” (19 mm) clevis pins and small hairpin cotters (Fig. 6).

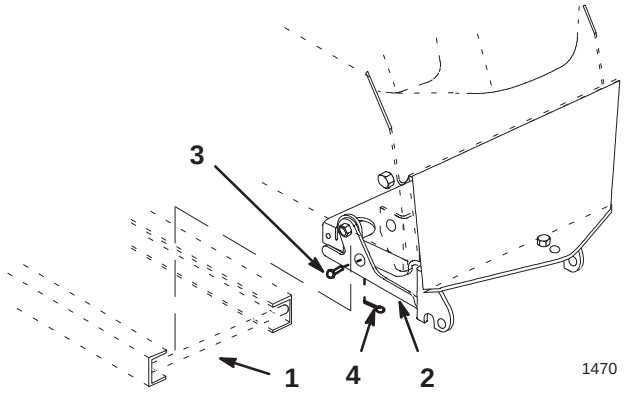

Figure 6

1. Frame mount
2. Latch lever
3. Clevis pin
4. Hairpin cotter–small

4. Push in on the front hitch release button and open the latch by rotating the latch arm. Slide the front attachment arm into the tractor hitch. Close the latch by rotating it back until the release button pops out to lock it in place (Fig. 7).

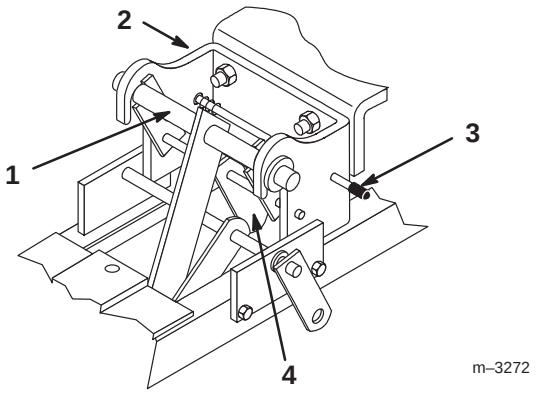

Figure 7

1. Front attachment arm
2. Front hitch
3. Release button
4. Latch arm

5. Place the lift rod into the lift arm and secure with a large hairpin cotter (Fig. 8).

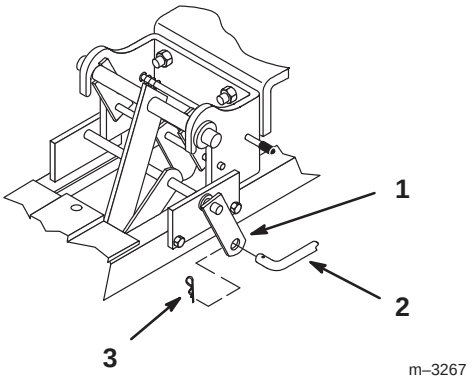

Figure 8

1. Lift arm
2. Lift rod
3. Hairpin cotter–large

6. Set the Dial-A-Height indicator to the ”Mounting Position”, and lower the attachment lift all the way; refer to Lowering Attachments.

7. Position the notch in lift plate around the left side tractor lift arm and slide the lift plate onto the attachment lift arm (Fig. 9). Secure with hairpin cotter from mower, at lift arm.

8. Thread the trunnion onto the lift rod and insert into one of the holes in the attachment lift plate. Secure with a 9/16” washer and medium hairpin cotter (Fig. 9).

PROTOTYPE

Note: Low hole provides maximum blade lift, but requires the greatest lift effort. Top hole requires less lift effort, but has lower lift height.

Note: Blade height can be adjusted intermediate between hole positions by removing the trunnion from the lift plate hole and repositioning it on the lift rod.

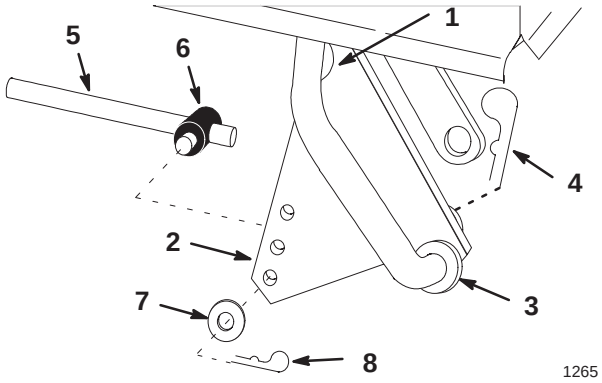

Figure 9

1. Notch
2. Lift plate
3. Lift arm
4. Hairpin cotter–from mower
5. Lift rod
6. Trunnion
7. Washer 1/2”
8. Hairpin cotter–medium

Install Index Handle

1. Hold the index handle near the pivot support and install the cable ”Z” end to the back hole of the triangular index plate (Fig. 10).

2. With the ”Z” end of the cable installed, attach the index handle to the pivot support using the 1/2-13 x 1” (25 mm) pivot bolt. Screw the bolt into the pivot support until the handle is snug and then back it off slightly to let the handle pivot freely (Fig. 10).

3. Install the 1/2” jam nut on the pivot bolt to lock it in place (Fig. 10).

4. Rotate the index handle to align the hole at the bottom of the handle with the control rod. Insert the control rod and secure with a large hairpin cotter (Fig. 10).

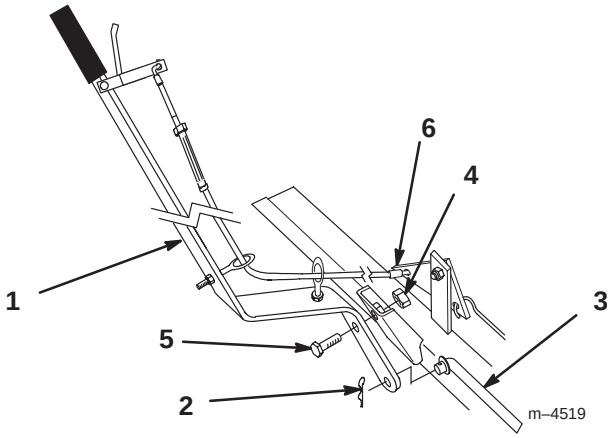

Figure 10

1. Index handle
2. Hairpin cotter
3. Control rod
4. Locking nut
5. Handle pivot bolt
6. ”Z” hook

5. Squeeze the index handle lever and check that it disengages in all positions of the blade. If it does not, loosen the jam nuts on the turnbuckle and adjust it to shorten the cable. After adusting, reset the jam nuts to lock the turnbuckle in place.

Install Steering Stops

1. Install the steering spindle stops in front of the rear tabs on the front wheel spindles (Fig. 11). Align so that the stops contact the axle during tight turns and prevent the wheels from contacting the blade frame. Secure with 5/16 x 3/4” (19 mm) self tapping bolts (Fig. 11).

PROTOTYPE

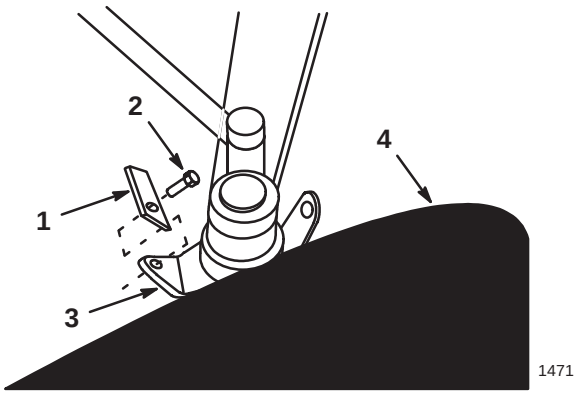

Figure 11

1. Steering wheel stop
2. Self tapping bolt 5/16 x 3/4” (19 mm)
3. Spindle stop
4. Tire

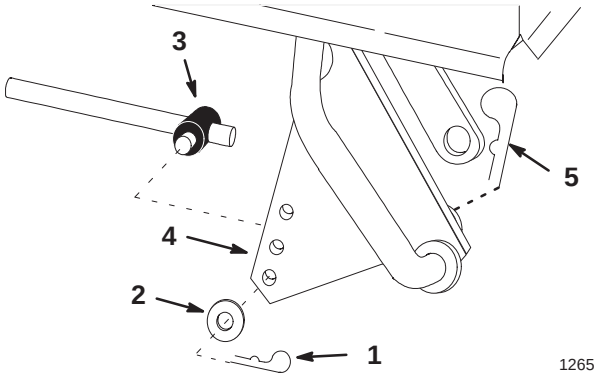

Figure 12

1. Hairpin cotter
2. Washer
3. Trunnion
4. Lift plate
5. Hairpin cotter–from mower

Removing the Blade

Note: Save all hardware, rods, washers and hairpin cotters for reuse when reinstalling the blade.

1. Park the machine on a level surface, set the parking brake, and turn the ignition key to “OFF” to stop the engine. Remove the ignition key.

2. Raise the attachment lift to the transport position. Turn the Dial-A-Height knob counterclockwise, all the way. Then, lower the attachment lift lever to the mounting position; refer to Lowering Attachments.

3. Remove hairpin cotter and washer from trunnion at lift plate (Fig. 12).

4. Remove hairpin cotter and slide lift plate off attachment lift (Fig. 12).

5. Remove the hairpin cotters and clevis pins from the latch levers (Fig. 13). Open the latch levers and lower the frame (Fig. 13).

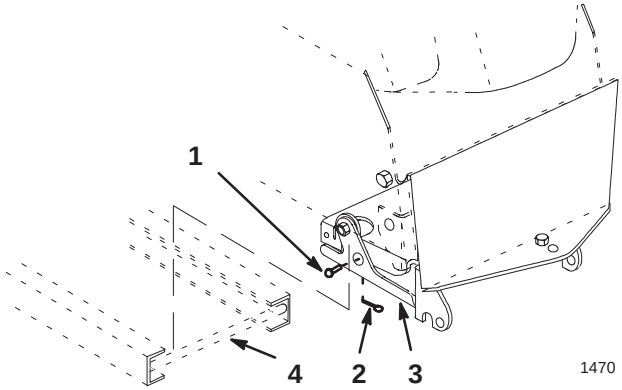

Figure 13

1. Clevis pin
2. Hairpin cotter
3. Latch lever
4. Frame

PROTOTYPE

6. Push in on the front hitch release button to open the hitch and remove the blade lift arm (Fig. 14).

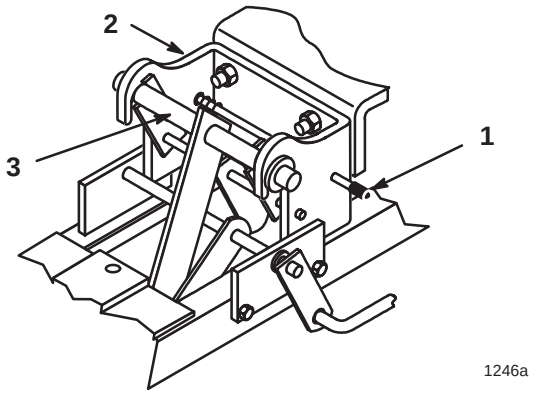

Figure 14

1. Release button
2. Front hitch
3. Lift arm

7. Remove hairpin cotter and control rod from index lever (Fig. 15).

8. Remove the index handle pivot bolt and locking nut. Unhook the ”Z” hook from the triangular plate. Remove the index handle. Save nounting hardware for reinstallation.

9. Slide the blade out between front wheels of the tractor.

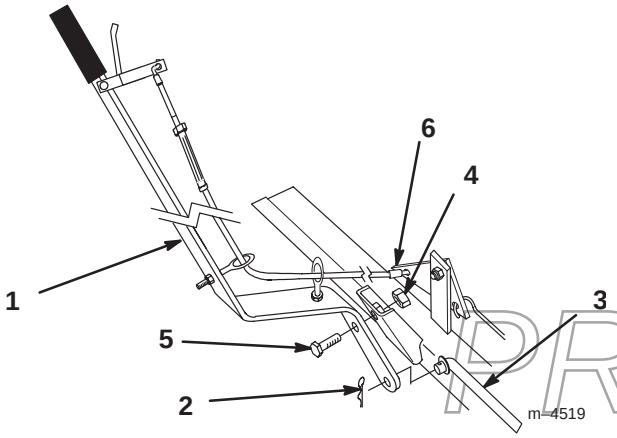

Figure 15

1. Index handle
2. Hairpin cotter
3. Control rod
4. Locking nut
5. Handle pivot bolt
6. ”Z” hook

10. Remove the steering spindle stops, from tabs on front wheel spindles, to allow for tighter turning radius (Fig. 16).

Note: Save all hardware, rods, washers and hairpin cotters for reuse when reinstalling the snow blade.

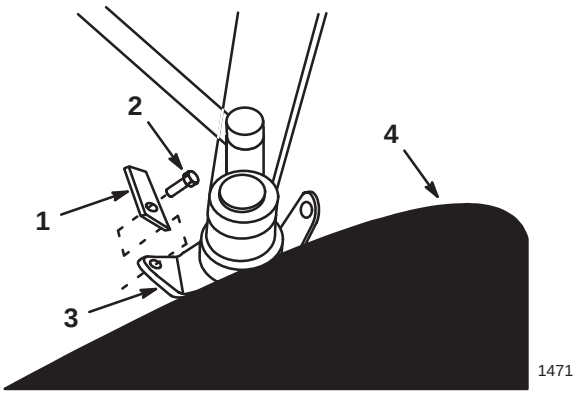

Figure 16

1. Steering wheel stop
2. Self tapping bolt 5/16 x 3/4”
3. Spindle stop
4. Tire

PROTOTYPE

Operation

⚠ DANGER

POTENTIAL HAZARD
- **Hitting fixed objects can cause the tractor to stop abruptly.**

WHAT CAN HAPPEN
- **Stopping abruptly can cause loss of control, equipment damage and personal injury.**

HOW TO AVOID THE HAZARD
- **Travel at a safe, slow speed.**
- **Check area to be plowed and mark all fixed objects so they can be avoided.**

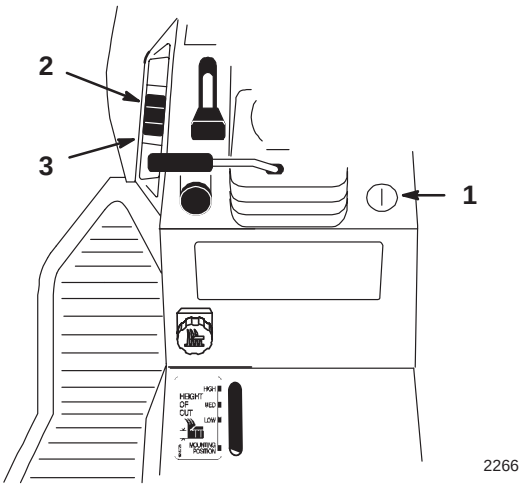

Figure 17

1. Key
2. Lift switch–UP
3. Lift switch–DOWN

Attachment Power Lift

The attachment power lift (optional on some models) (Fig. 17) is used to raise and lower attachments.

Raising Attachments

1. Turn key to the “ON” or “RUN” position (Fig. 17).

2. Push the lift switch in the “UP” direction to raise the attachment lift (Fig. 17). This will lift and hold the attachment in the up, or raised position.

Lowering Attachments

PROTOTYPE

1. Turn key to the “ON” or “RUN” position (Fig. 17).

2. Push the lift switch in the “DOWN” direction to lower the attachment lift (Fig. 17). This will lower the attachment lift.

Attachment Lift Lever

The attachment lift lever (Fig. 18) is used to raise and lower various attachments.

Raising Attachments

1. Depress the clutch and/or brake pedal(s) to stop the machine.
2. Pull the attachment lift lever rearward until latch locks. In this position the lift will hold the attachment in the up, or raised position.

Lowering Attachments

1. Depress the clutch and/or brake pedal(s) to stop the machine.
2. Pull attachment lift lever rearward, to release lift pressure, and push the button on top to release the latch. Move the lift lever forward to lower the attachment.

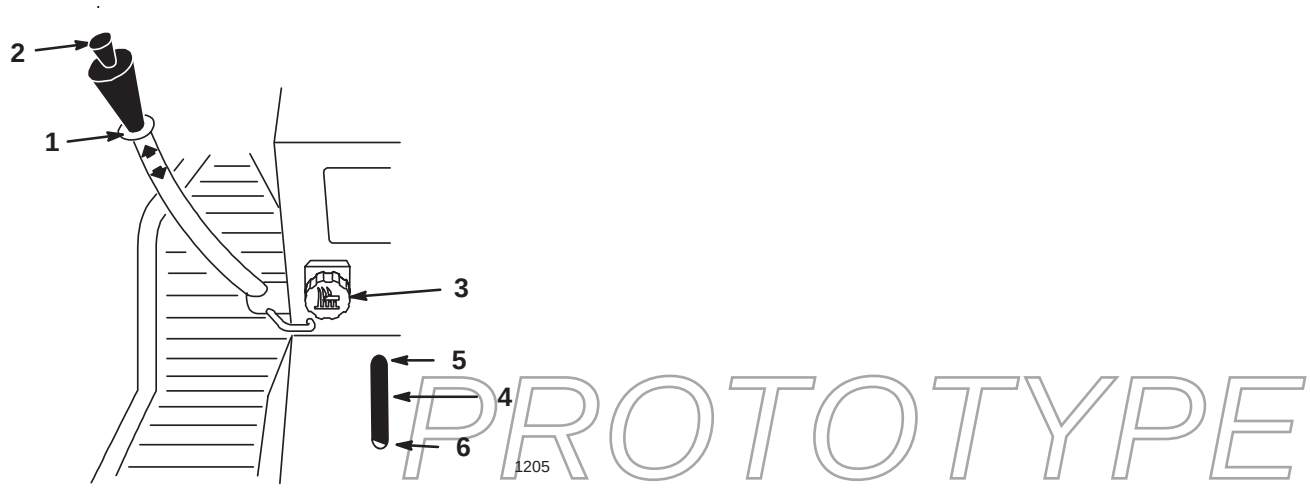

Figure 18

1. Lift lever
2. Button
3. Dial-A-Height control
4. Indicator
5. High
6. Mounting position

Adjusting Dial-A-Height

The Dial-A-Height control (Fig. 18) is used to limit the downward travel of the attachment. The Dial-A-Height knob is rotated to change the location of this stop, up or down.

1. Raise the attachment lift lever: Refer to Raising Attachments. In the raised position the Dial-A-Height knob (Fig. 18) can be rotated to change the stop location. Turn clockwise to raise and counterclockwise to lower the height of the attachment.
2. The Dial-A-Height indicator (Fig. 18) will show the change, high to low, in attachment lift height as adjustment is made.

Adjusting Blade Index

The blade can be indexed side to side, in 5 positions. The direction is controlled by the handle on the right hand side of the frame (Fig. 19).

1. Squeeze the release lever toward the handle (Fig. 19).

2. Push or pull the lever to change the index position and release lever. Index pin must snap into hole in channel to retain position.

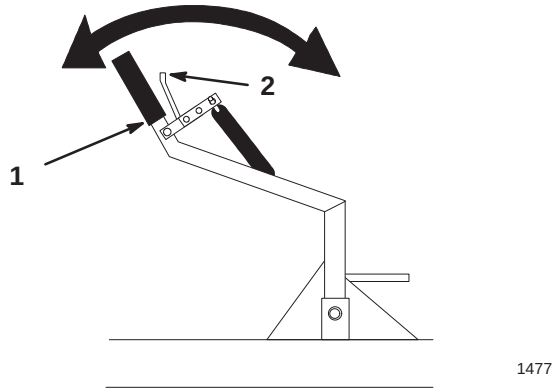

Figure 19

1. Handle
2. Release lever

Adjusting Blade Trip Springs

The blade trip springs can be mounted in 4 positions. The top hole provides the greatest scraping pressure and the lower hole the least scraping pressure (Fig. 20).

1. Remove the hairpin cotter and slide the rod out from the blade and springs (Fig. 20).

2. Slide the rod through the springs and new hole position in the blade (Fig. 20).

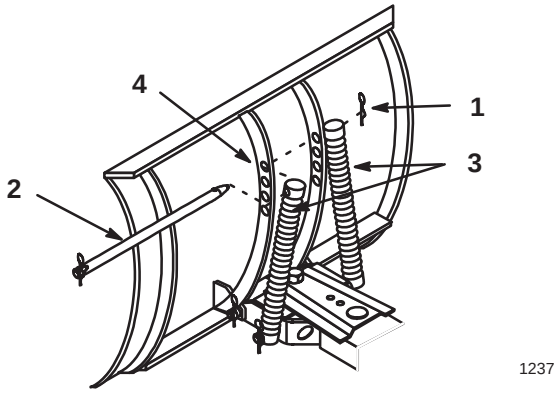

Figure 20

1. Hairpin cotter
2. Rod
3. Spring
4. Top hole

PROTOTYPE

Tips for Using Snow Blade

Remove snow as soon as possible after it falls. This produces best snow removal results.

Snow is generally removed from driveway by making one pass down the center and then plowing snow to either side on successive passes.

If the tractor looses traction when using the snow blade, wheel weights and tire chains may be necessary. These are available from your dealer.

Blade trip springs can be adjusted for scraping aggressiveness and surface conditions. Second hole from the top is recommended for snow. Refer to adjusting blade trip springs.

Optional skid shoe kit is available to control the height of blade from the ground for even scraping.

PROTOTYPE

Maintenance

Service Interval Chart

Service Operation	Each Use	5 Hours	25 Hours	Storage Service	Fall Service	Notes
Grease–Channel pivot			X	X	X	
Oil–Linkages			X	X	X	
Chipped Surfaces–paint				X		
Scraper–check for wear				X	X	

⚠ CAUTION

POTENTIAL HAZARD

- **If you leave the key in the ignition switch, someone could start the engine.**

WHAT CAN HAPPEN

- **Accidental starting of the engine could seriously injure you or other bystanders.**

HOW TO AVOID THE HAZARD

- **Remove the key from the ignition switch and pull the wire off the spark plug before you do any maintenance. Also push the wire aside so it does not accidentally contact the spark plug.**

PROTOTYPE

Greasing and Lubrication

Service Interval/Specification

Grease and oil the blade after every 25 operating hours or once a year, whichever occurs first.

Grease Type: General-purpose grease.

Oil Type: SAE 10W or 10W30.

Grease Channel Pivot

1. Set the parking brake and turn the ignition key to “OFF” to stop the engine. Remove the ignition key.
2. Clean the area around channel pivot with a rag. Apply grease to pivot bolt, frame and sector (Fig. 21).
3. Wipe off excess grease.

Oil Linkages

1. Set the parking brake and turn the ignition key to “OFF” to stop the engine. Remove the ignition key.
2. Place a few drops of oil on all movable linkages (Fig. 21).
3. Wipe off excess oil.

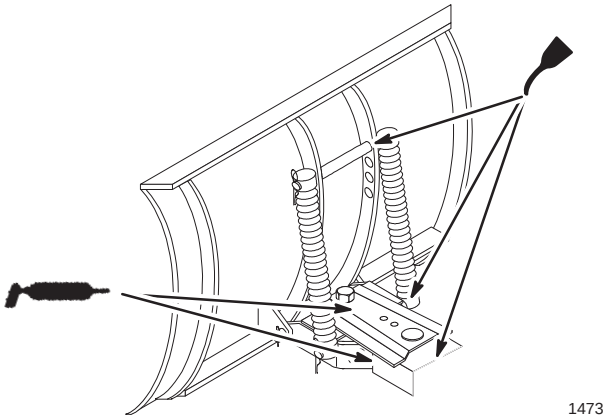

Figure 21

PROTOTYPE

Reversing the Scraper Blade

The scraper blade contacts the ground preventing damage to the snow blade. Periodically inspect the scraper blade for wear. When scraper becomes worn, before working surface contacts the housing, reverse the scraper blade.

1. Set the parking brake, and turn the ignition key to “OFF” to stop the engine. Remove the ignition key.
2. Raise the attachment lift lever: Refer to Raising Attachments, and support the housing off the ground.
3. Remove lock nuts and carriage bolts to remove scraper blade (Fig. 22).
4. Reverse scraper blade to replace a worn edge and install with previously removed hardware (Fig. 22).

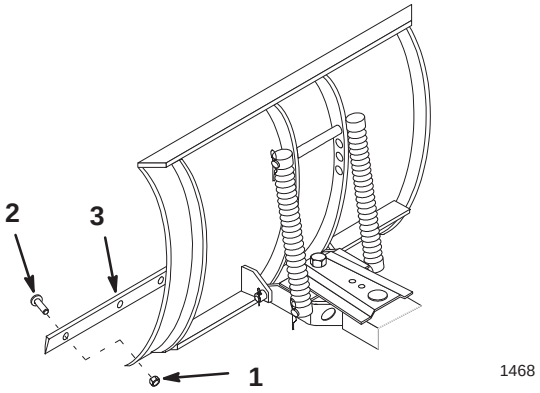

Figure 22

1. Lock nut
2. Carriage bolt
3. Scraper blade

Storage

1. Before long term storage wash the blade with mild detergent and water to remove dirt and grime from the entire attachment.
2. Check the condition of the scraper blade; refer to Reversing Scraper Blade, page 15.
3. Grease and oil the blade; refer to Greasing and Lubrication, page 14.
4. Check and tighten all bolts, nuts, and screws. Repair or replace any part that is damaged.
5. Paint all scratched or bare metal surfaces. Paint is available from your Authorized Service Dealer.
6. Store the blade in a clean, dry garage or storage area. Cover the machine to protect it and keep it clean.

PROTOTYPE

PROTOTYPE

PROTOTYPE

TORO®

PROTOTYPE