FORM NO. 3323-241

TORO®

Z – Master

48” Recycler®

for

OUT FRONT Z –TRACTION UNIT

Model No. 78477– 995001 & Up

PROTOTYPE

Operator’s Manual

IMPORTANT: Read this manual carefully. It contains information about your safety and the safety of others. Also become familiar with the controls and their proper use before you operate the product.

Introduction

We want you to be completely satisfied with your new product, so feel free to contact your local Authorized Service Dealer for help with service, genuine replacement parts, or other information you may require.

Whenever you contact your Authorized Service Dealer or the factory, always know the model and serial numbers of your product. These numbers will help the Service Dealer or Service Representative provide exact information about your specific product. You will find the model and serial number plate located in a unique place on the product as shown below.

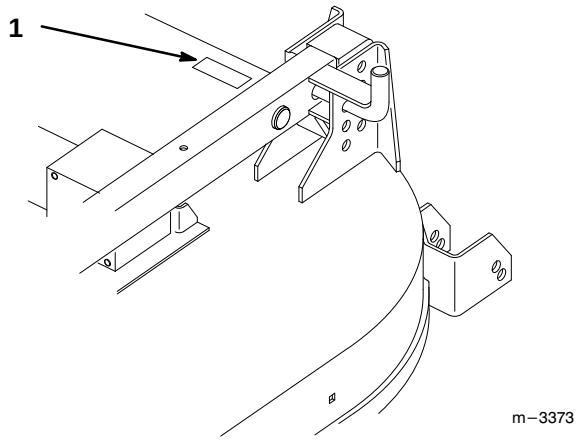

1. Model and Serial Number Plate

For your convenience, write the product model and serial numbers in the space below.

Model No: _____

Serial No. _____

The warning system in this manual identifies potential hazards and has special safety messages that help you and others avoid personal injury, even death. DANGER, WARNING and CAUTION are signal words used to identify the level of hazard. However, regardless of the hazard, be extremely careful.

DANGER signals an extreme hazard that will cause serious injury or death if the recommended precautions are not followed.

WARNING signals a hazard that may cause serious injury or death if the recommended precautions are not followed.

CAUTION signals a hazard that may cause minor or moderate injury if the recommended precautions are not followed.

Two other words are also used to highlight information. “Important” calls attention to special mechanical information and “Note” emphasizes general information worthy of special attention.

The left and right side of the machine is determined by sitting on the seat in the normal operator’s position.

PROTOTYPE

©The Toro Company – 1998

Printed in USA

Contents

	Page
Safety and Instruction Decals	2
Installation	3
Loose Parts	3
Install Castor Wheels	4
Installing Mower	4
Removing the Mower	6
Operation	9
Operating the Power Take Off (PTO)	9
Adjusting Height-of-Cut	10
Adjusting Rollers	10
Tilting the Mower	11
Maintenance	12
Service Interval Chart	12
Cutting Blades	12
Correcting Cutting Unit Mismatch	15
Setting the Front-to-Rear Pitch	16
Setting the Side-to-Side Leveling	16
Greasing and Lubrication	17
Gearbox Fluid	17
Changing Gearbox Fluid	17
Checking Gearbox Fluid	18
Replacing the Castor Wheel Fork Bushings	19
Servicing the Castor Wheels and Bearings	20
Replacing Push Arm Bushings	21
Storage	22
Troubleshooting	23

PROTOTYPE

Safety and Instruction Decals

Safety decals and instructions are easily visible to the operator and are located near any area of potential danger. Replace any decal that is damaged or lost.

ON RIGHT SIDE
(Part No. 98−1304)



ON EACH CORNER
(Part No. 43−8480)



FRONT OF CENTER GEARBOX
(Part No. 68−8340)

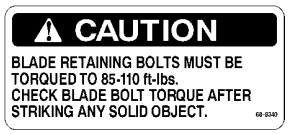

ON RIGHT SIDE OF CARRIER FRAME
(Part No. 98−0816)

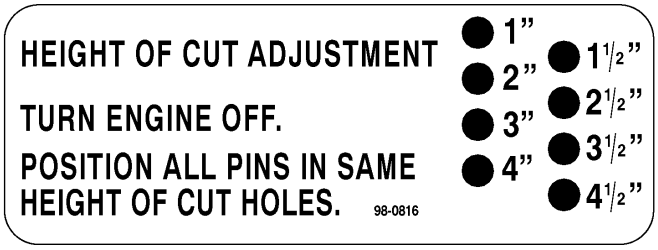

IN FRONT OF GEARBOX
(Part No. 100−5809)

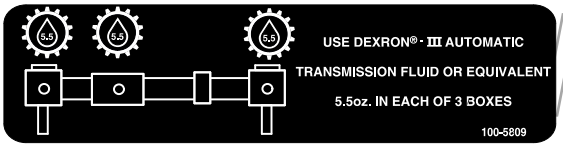

NEXT TO PTO COVER
(Part No. 98−7324)



PROTOTYPE

Installation

Loose Parts

Note: Use the chart below to identify parts used for assembly.

DESCRIPTION	QTY.	USE
Deck	1	Install Mower
Castor Wheels	2	Install Castor Wheels
Operator's Manual	1	Read before operating
Parts Catalog	1	Ordering parts

PROTOTYPE

Install Castor Wheels

IMPORTANT: Make sure your castor wheels are installed correctly as shown in figure 1.

1. Place spacer and (2) thrust washers on shaft and slide the castor wheel into the mounting tube (Fig. 1).

2. Place (2) thrust washers on top of the fork and secure with retaining ring (Fig. 1).

   Note: The location of the thrust washers on each fork may need adjustment to maintain a level deck.

3. Grease the fitting on the carrier frame mounting tube using No. 2 general purpose lithium base or molybdenum base grease, refer to: Greasing and Lubrication.

4. Set the castor wheel tire pressure to 50 psi (345 kPa).

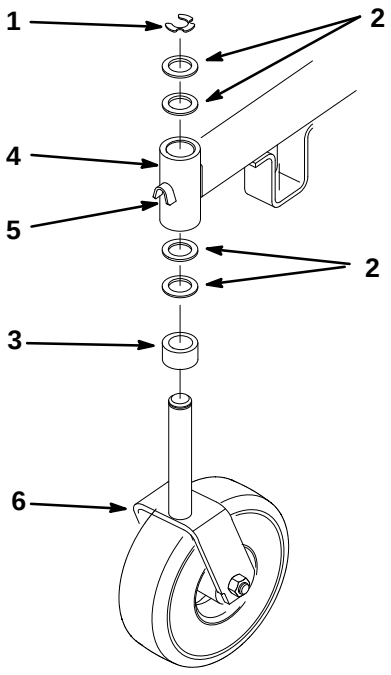

Figure 1

1. Retaining ring
2. Thrust Washer (4)
3. Spacer
4. Carrier Frame Mounting Tube
5. Grease fitting
6. Castor Wheel Fork

Installing Mower

1. Position carrier frame in front of traction unit and place push arms into clevises (Fig. 2).

2. Retain push arms with pivot pin assemblies, aligned with flat against frame, and secure with hairpin cotters (Fig. 2).

   Note: Pivot pin assemblies and hairpin cotters are part of traction unit.

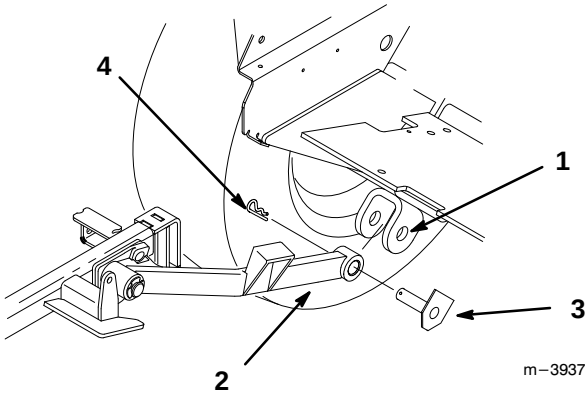

Figure 2

1. Clevis
2. Push Arm
3. Pivot Pin Assembly–flat
4. Hairpin Cotter

PROTOTYPE

3. Lift carrier frame into vertical position, refer to: Tilting the Mower.

4. Place a block, approximately 4 inches high, under the carrier frame. This will raise the frame vertically.

5. Secure spring end plate assembly to carrier frame with 3/8” x 7/8” (23 mm) shoulder bolt and 3/8” locknut (Fig. 3).

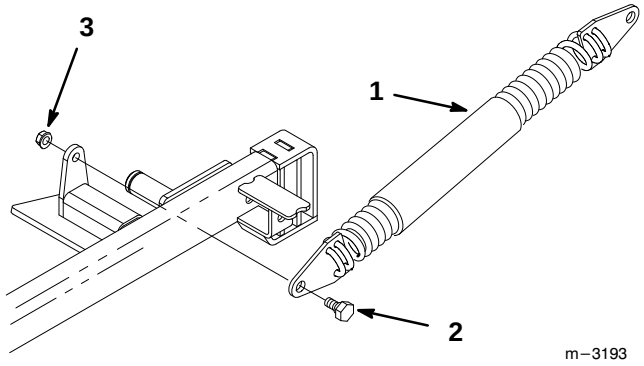

Figure 3

1. Spring Assembly
2. Shoulder Bolt 3/8” x 7/8” (22 mm)
3. Locknut 3/8”

Note: You may have to install spring to traction unit if it is not installed.

6. Install 3/8” x 7/8” (23 mm) shoulder bolts and 3/8” locknuts securing spring end plate assemblies to traction unit (Fig. 4).

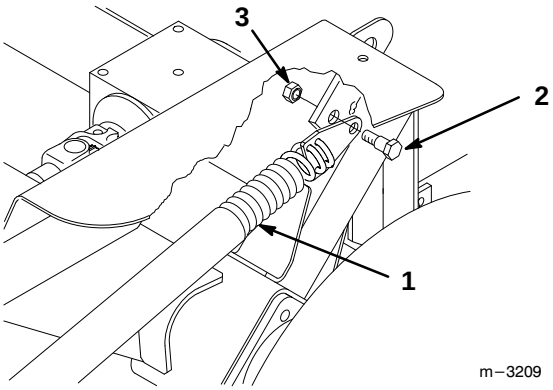

Figure 4

1. Spring Assembly
2. Shoulder Bolt 3/8” x 7/8” (22 mm)
3. Locknut 3/8”

7. Position mower in front of traction unit.

8. Rotate PTO drive shaft so holes align with hole in gearbox shaft and slide together (Fig. 5).

9. Drive roll pin through hole to secure PTO drive shaft to gearbox shaft (Fig. 5).

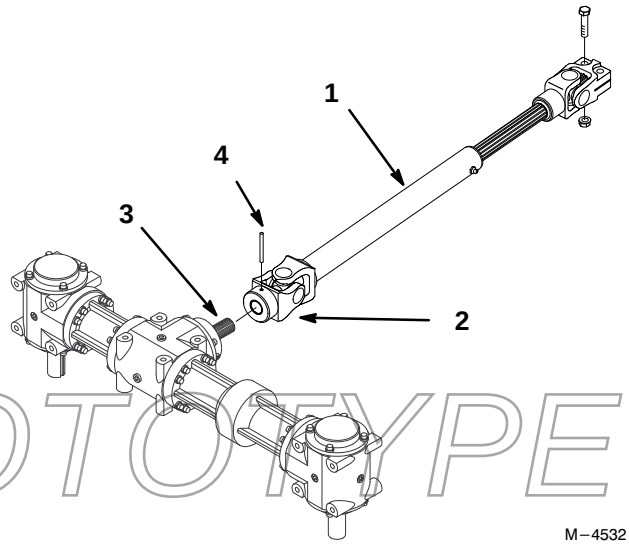

PROTOTYPE

Figure 5

1. PTO Driveshaft
2. Universal Joint
3. Gearbox shaft
4. Roll Pin

10. Remove wood block. Release the latch levers and push carrier frame down. Latch pins should lock.

11. Select hole in mower hanger bracket corresponding to the height-of-cut desired. Lift on side and front to align holes and insert clevis pin (Fig. 6).

12. Secure clevis pin with hairpin cotter (Fig. 6).

Note: All four clevis pins should be in the same hole location for a level cut.

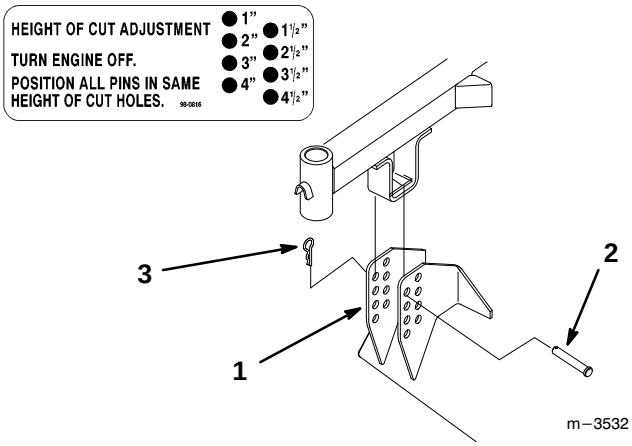

Figure 6

1. Mower Hanger Bracket
2. Clevis Pin
3. Hairpin Cotter

Removing the Mower

1. Disengage the power take off (PTO), set the parking brake, and turn the ignition key to "OFF" to stop the engine. Remove the key.

2. Remove hairpin cotters and clevis pins from mower hanger brackets and separate mower from carrier frame (Fig. 7).

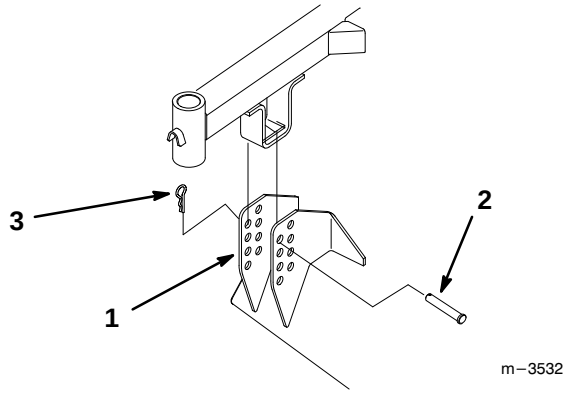

Figure 7

1. Mower Hanger Bracket
2. Clevis Pin
3. Hairpin Cotter

3. Tilt carrier frame into its upright position. Refer to Tilting the Mower on page 11.

4. Place a block, approximately 4 inches high, under the carrier frame. This will raise the frame vertically.

5. Check to see if tension has been removed from the spring assemblies. If tension remains add blocks to raise carrier frame higher. If there is too much tension use a smaller block.

PROTOTYPE

6. Remove 3/8” x 7/8” (23 mm) shoulder bolts and 3/8” locknuts securing spring end plate assemblies to carrier frame (Fig. 8).

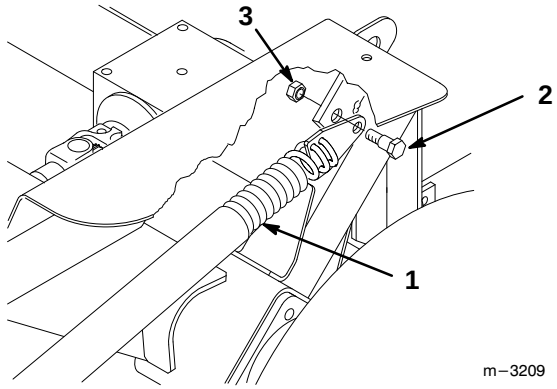

Figure 8

1. Spring Assembly
2. Shoulder Bolt 3/8” x 7/8” (22 mm)
3. Locknut 3/8”

7. Remove the block under the carrier frame.

8. Unfold carrier frame.

9. Remove hairpin cotters and pivot pin assemblies securing push arms to traction unit pivot brackets (Fig. 9).

Note: Save all hardware for use when installing mower. Items 3 and 4 are part of traction unit.

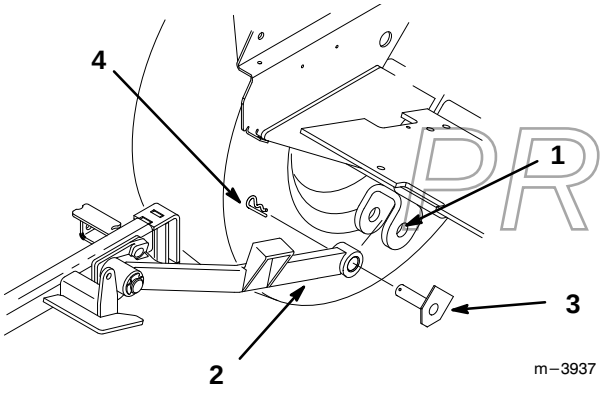

Figure 9

1. Pivot Bracket
2. Push Arm
3. Pivot Pin Assembly–flat
4. Hairpin Cotter

10. Remove 5/16–18 x 7/8” (11 mm) shoulder bolt and 5/16” flange nut holding PTO cover down (Fig. 10).

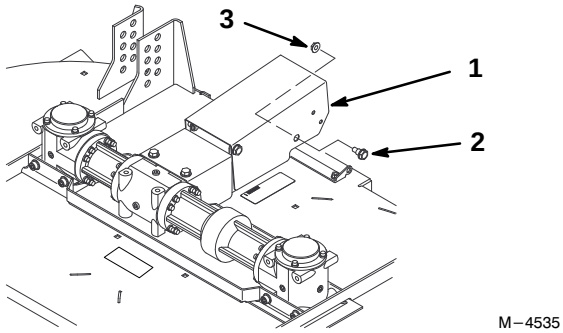

Figure 10

1. PTO cover
2. Shoulder bolt 5/16–18 x 7/8” (11 mm)
3. Flange nut 5/16”

Note: Drive shaft remains with traction unit.

11. Drive roll pin through hole in PTO drive shaft to separate from gearbox shaft (Fig. 11).

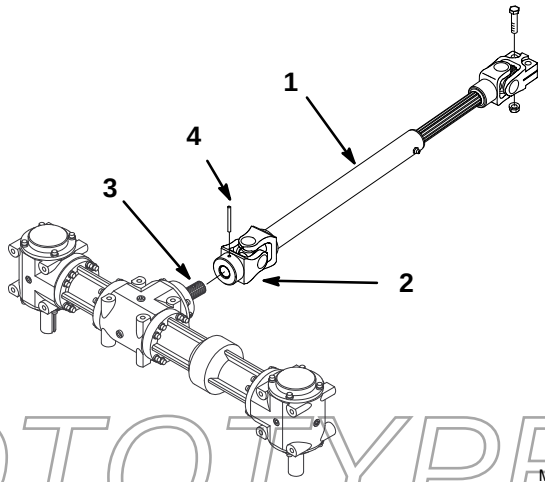

Figure 11

1. PTO Driveshaft
2. Universal Joint
3. Gearbox shaft
4. Roll Pin

PROTOTYPE

12. Move deck and carrier frame away from traction unit.

Note: Remove drive shaft from gearbox shaft if you do not hook up a deck immediately or when putting on optional attachments.

13. Remove (2) 3/8"–16 x 1-5/8" (41.5 mm) bolts and 3/8"–16 locknuts from universal joint and slide the driveshaft off gearbox shaft (Fig. 12).

Note: Save all hardware for use when installing mower.

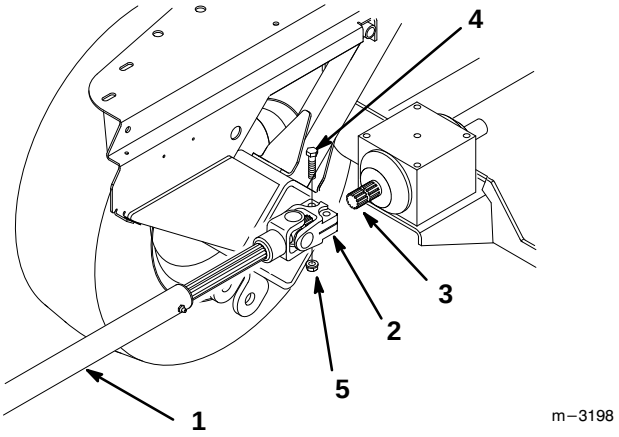

Figure 12

1. PTO Driveshaft
2. Universal Joint
3. Gearbox shaft
4. Bolt 3/8"–16 x 1-5/8" (41.5 MM)
5. Locknut 3/8"–16

PROTOTYPE

Operation

Operating the Power Take Off (PTO)

The power take off (PTO) switch engages and disengages power to the electric clutch.

Engaging the PTO

1. With engine running, release pressure on the traction control levers and place in neutral (Fig. 13).

2. Release the parking brake (Fig. 13).

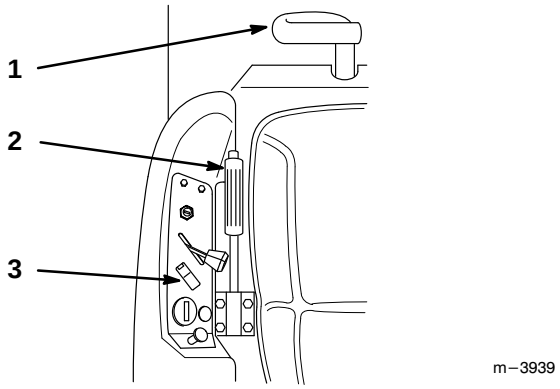

Figure 13

1. Traction control lever
2. Parking brake
3. PTO-Switch

3. Move throttle to fast position.

4. To engage lift cover and move the PTO switch to the “ON” position (Fig. 14).

Note: It is best to engage mower over hard surface or area that has been mowed.

Disengaging the PTO

1. Closing the cover moves the PTO switch to the “OFF”position (Fig. 14).

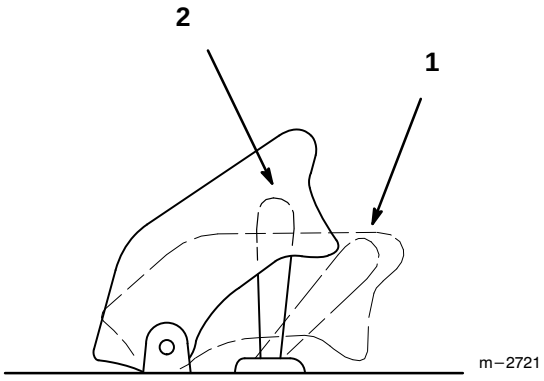

Figure 14

1. PTO-Off
2. PTO-On

PROTOTYPE

Adjusting Height-of-Cut

The height-of-cut is adjusted from 1” to 4-1/2” (25 to 115 mm) in 1/2” (13 mm) increments by relocating four clevis pins in different hole locations.

1. To adjust, remove hairpin cotter and clevis pin from mower hanger bracket (Fig. 15).
2. Select hole in mower hanger bracket corresponding to the height-of-cut desired. Lift on side and front to align holes and insert clevis pin (Fig. 15).
3. Secure clevis pin with hairpin cotter (Fig. 15).

Note: All four clevis pins should be in the same hole location for a level cut.

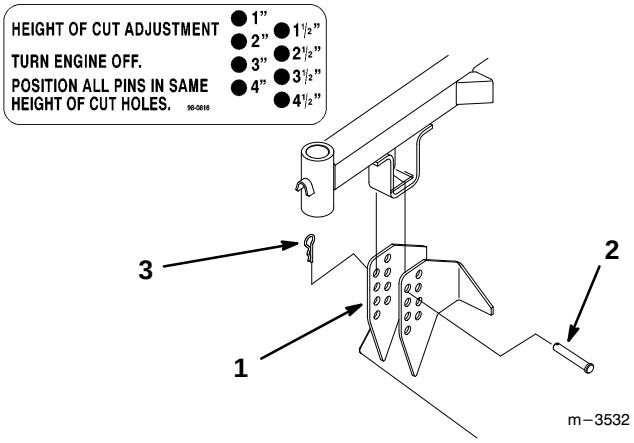

Figure 15

1. Mower Hanger Bracket
2. Clevis Pin
3. Hairpin Cotter

Adjusting Rollers

The rollers are preset for heights-of-cut above 2” (51 mm) If the height-of-cut is set to the 1” or 1–1/2” (25 or 39 mm) the rollers must be adjusted to the upper hole location.

1. After adjusting height-of-cut, tilt mower to adjust rollers, refer to; Tilting Mower.
2. Remove the locknut and bolt to change hole location (Fig. 16).
3. Select the proper hole position for the height-of-cut to be used (Fig. 16).
4. Insert bolt through roller and secure with locknut.
5. Repeat adjustment on remaining rollers.

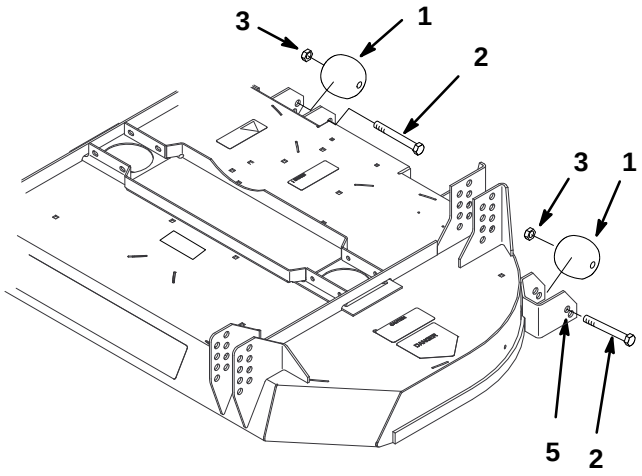

PROTOTYPE

Figure 16

1. Roller
2. Bolt
3. Locknut
4. Spacer
5. Holes

Tilting the Mower

The mower can be tilted up for ease of service or to shorten unit length for transport and storage.

To Raise Mower

1. Lift or push down on side of carrier frame to release weight on latch pin.

2. Pull out on latch pin to release and rotate into notch to hold in the open position (Fig. 17). Repeat on the other side. Lower rear of mower onto rollers.

3. Rotate latch pins into released position after deck has been lowered onto rear rollers.

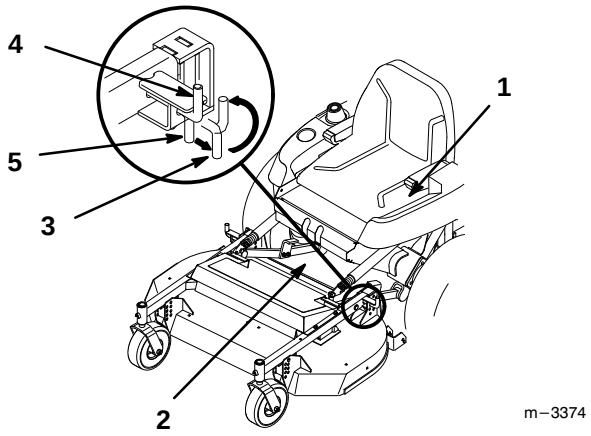

Figure 17

1. Parking brake
2. PTO cover
3. Latch pin
4. Notch–open
5. Locked Position

4. Standing in front of the mower, lift up and push rearward on front to raise mower (Fig. 18).

5. Raise mower until it contacts stops and latch pins snap into locked position.

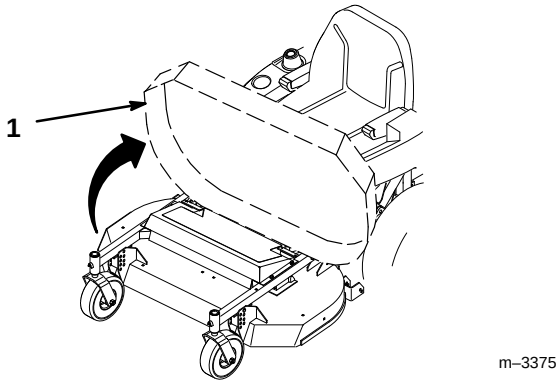

Figure 18

1. Mower up

To Lower Mower

1. Pull out latch pins and rotate into notch to hold in the open position (Fig. 17).

2. Standing in front of the mower, pull forward on front and lower mower (Fig. 18).

3. Rotate latch pins into released position and lift on side of carrier frame until latch pin engages (Fig. 17). Repeat on the other side.

PROTOTYPE

Maintenance

Service Interval Chart

Service Operation	Each Use	8 Hours	25 Hours	100 Hours	Storage Service	Notes
Cutting Blades – check		X			X	
Push arm bushings – grease		X				
Castor Wheels – grease			X			
Gear box – oil change				Initial		
Gear box – check				X		
Mower Housing – clean	X	X			X	
Chipped Surfaces – paint					X	

For ease of maintenance and service the mower can be tilted up, refer to: Tilting the Mower, in the Operation section for instructions.

Cutting Blades

To ensure a superior quality of cut, keep the blades sharp. For convenient sharpening and replacement, you may want to keep extra blades on hand.

⚠ WARNING

POTENTIAL HAZARD

- **A blade that is worn or damaged could break apart and pieces could be thrown at bystanders or at you as you use the mower.**

WHAT CAN HAPPEN

- **Pieces of blade that may be thrown could seriously injure or kill you or bystanders.**

HOW TO AVOID THE HAZARD

- **Periodically inspect the blade for wear and damage. Immediately install a new blade if it is worn or damaged.**

Before Inspecting or Servicing the Blades

Park the machine on a level surface, disengage the blade control (PTO) and set the parking brake. Turn the ignition key to “OFF” to stop the engine. Remove the key and disconnect the spark plug wire(s) from the spark plug(s).

PROTOTYPE

Inspecting the Blades

1. Inspect the cutting edges (Fig 19). If the edges are not sharp or have nicks, remove and sharpen the blades. Refer to Sharpening the Blades on page 15.

2. Inspect the blades, especially the curved area (Fig. 19). If you notice any damage, wear, or a slot forming in this area (item 3 in Fig. 19), immediately install a new blade.

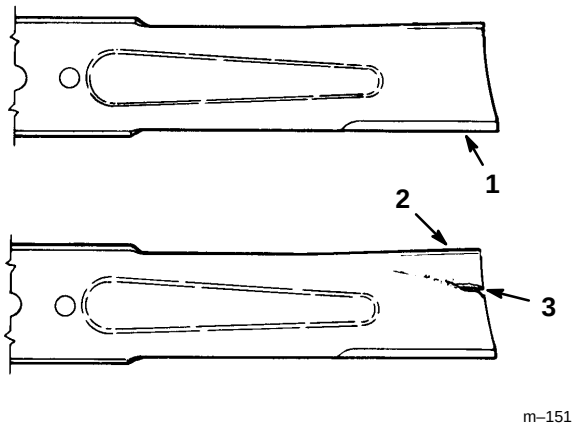

Figure 19

1. Cutting Edge
2. Curved Area
3. Wear/slot Forming

Checking for Bent Blades

1. Rotate the blades until the ends face forward and backward (Fig. 20). Measure from a level surface to the cutting edge of the blades (Fig. 21). Note this dimension.

2. Rotate the opposite ends of the blades forward. Measure from a level surface to the cutting edge of the blades at the same position as in step 1 above. The difference between the dimensions obtained in steps 1 and 2 must not exceed 1/8" (3 mm). If this dimension exceeds 1/8" (3 mm), the blade is bent and must be replaced. Refer to Removing the Blades, and Installing the Blades on page 14.

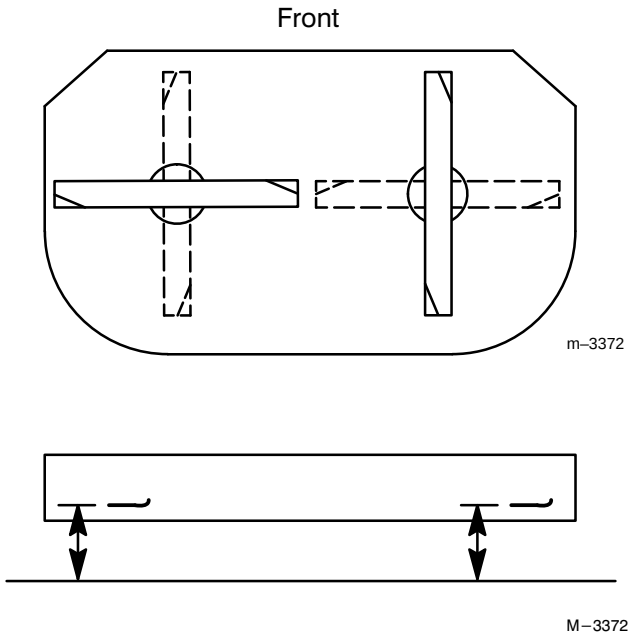

Figure 20

PROTOTYPE

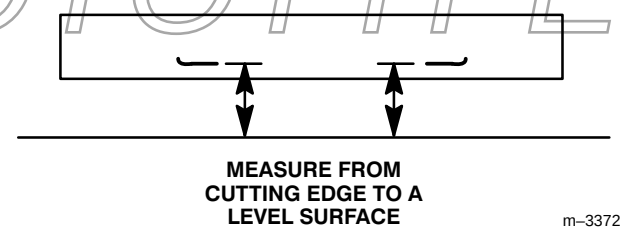

Figure 21

⚠ WARNING

POTENTIAL HAZARD

- **A blade that is bent or damaged could break apart and pieces could be thrown at bystanders or at you as you use the mower.**

WHAT CAN HAPPEN

- **Pieces of blade that may be thrown could seriously injure or kill you or bystanders.**

HOW TO AVOID THE HAZARD

- **Always replace bent or damaged blade with a new blade.**
- **Never file or create sharp notches in the edges or surfaces of blade.**

Removing the Blades

Blades must be replaced if a solid object is hit, if the blade is out of balance or is bent. To ensure optimum performance and continued safety conformance of the machine, use genuine TORO replacement blades. Replacement blades made by other manufacturers may result in non-conformance with safety standards.

Hold the blade end using a rag or thickly-padded glove. Remove the retainer bolt with its washer and spacer, and the blade bolts and locknuts from the blade retainer (Fig. 23).

Installing the Blades

IMPORTANT: The blades are different for each side and rotate in opposite directions forcing clippings to the center rear of the mower. Align cutting edges properly when installing (Fig. 22).

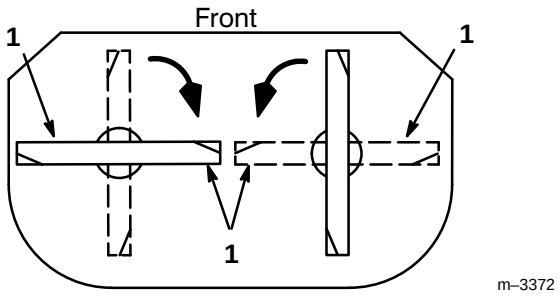

Figure 22

1. Cutting edge

1. Install the blade onto the blade retainer and secure with retainer bolt, spacer and washer (Fig. 23).

IMPORTANT: The curved part of the blade, the sail, must be pointing upward toward the top of the mower to ensure proper cutting.

2. Install the blade shear bolts and locknuts (Fig. 23).

3. Torque blade shear bolts to 80–90 in-lb (9–10.2 N•m).

4. Torque the retainer bolt to 85–110 ft-lb (115–140 N•m).

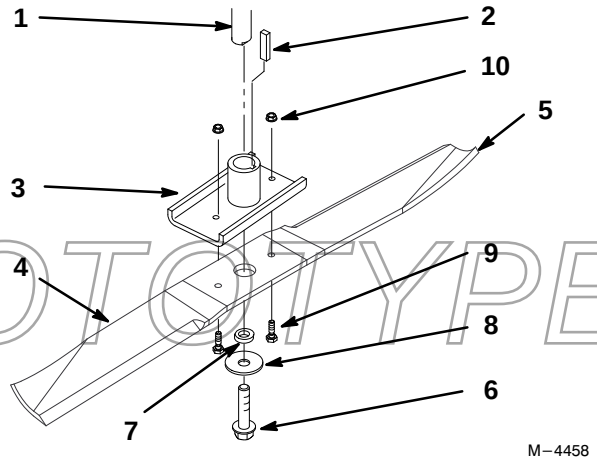

Figure 23

1. Spindle
2. Key
3. Blade retainer
4. Blade
5. Sail Area of Blade
6. Retainer bolt
7. Spacer
8. Washer
9. Shear Bolt
10. Locknut

PROTOTYPE

Sharpening the Blades

1. Use a file to sharpen the cutting edge at both ends of the blade (Fig. 24). Maintain the original angle. The blade retains its balance if the same amount of material is removed from both cutting edges.

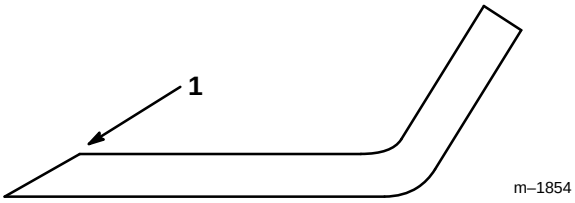

Figure 24

1. Sharpen at original angle

2. Check the balance of the blade by putting it on a blade balancer (Fig. 25). If the blade stays in a horizontal position, the blade is balanced and can be used. If the blade is not balanced, file some metal off the end of the sail area only (Fig. 23). Repeat this procedure until the blade is balanced.

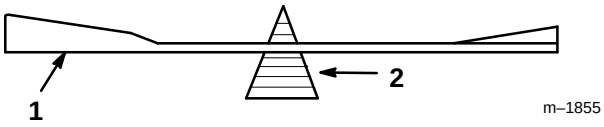

Figure 25

1. Blade
2. Balancer

Correcting Cutting Unit Mismatch

If one cutter blade cuts lower than the other, correct as follows:

1. Stop the engine, remove the key and disconnect the spark plug wire(s) from the spark plug(s).

2. Adjust the tire pressure in all tires to specifications and check that the blades are not bent. Refer to Checking for Bent Blades on page 13.

3. Set the height-of-cut to the 2-1/2” position. Refer to Adjusting the Height-Of-Cut in the Operation section. Make sure the clevis pins are resting on the frame cushions and there is no excessive wear push arm pivot points.

PROTOTYPE

Setting the Front-to-Rear Pitch

1. Check the tire pressure on both deck and traction unit.
2. Position one blade front-to-rear (Fig. 26). Measure at “C” and “D” locations (Fig. 26) from a level surface to the cutting edge of the blade tips (Fig. 27).
3. The mower should be 1/4”–1/2” (6–13 mm) lower in front “C” than in the rear “D”. Repeat for opposite blade.

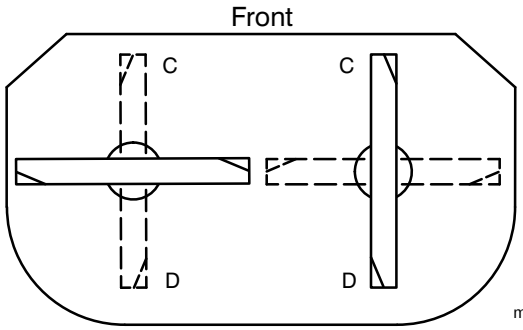

Figure 26

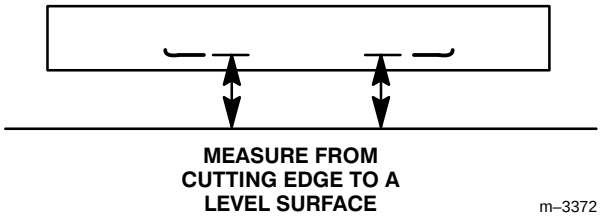

Figure 27

4. To change the front-to-rear pitch, remove the retaining ring and move an equal number of thrust washers on both castor wheel forks. Move the thrust washers from the top of the carrier frame mounting tube to the bottom to raise the front of the mower. Move the thrust washers from the bottom of the mounting tube to the top to lower the front of the mower (Fig. 34).
5. Check the side-to-side leveling of the cutting unit.

Setting the Side-to-Side Leveling

1. Check the tire pressure on both deck and traction unit.
2. Position the blades side-to-side (Fig.28). Measure at “A” and “B” locations (Fig. 28) from a level surface to the cutting edge of blade tips (Fig.29).
3. The difference between measurements “A” and “B” should be no more than 1/4” (6 mm).

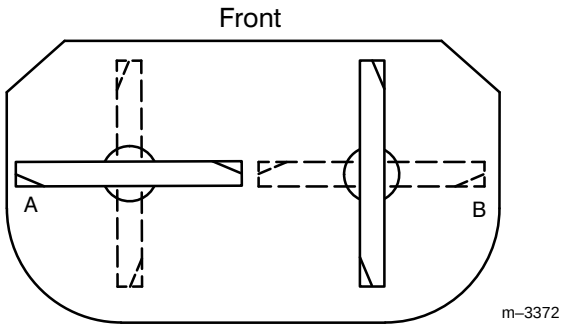

Figure 28

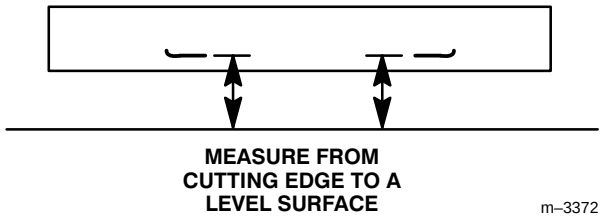

Figure 29

4. To change the side-to-side leveling, remove the retaining ring and move the thrust washers on one castor wheel fork only. Move the thrust washers from the top of the carrier frame mounting tube to the bottom to raise the corresponding side of the mower. Move the thrust washers from the bottom of the mounting tube to the top to lower the corresponding side of the mower. (Fig. 34).
5. Recheck the front-to-rear pitch of the cutting unit.

PROTOTYPE

Greasing and Lubrication

The cutting unit must be lubricated regularly. Refer to the Service Interval Chart on page 12. Grease with No. 2 general purpose lithium base or molybdenum base grease.

1. Stop the engine, remove the key and disconnect the spark plug wire(s) from the spark plug(s).

2. Grease the fittings on push arms (Fig. 30).

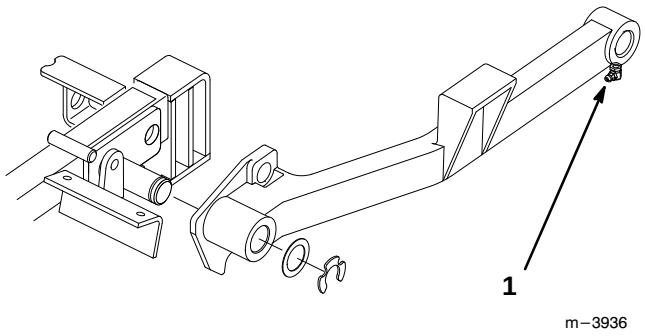

Figure 30

1. Push arm bearing

3. Grease the fittings on the carrier frame mounting tubes and castor wheels (Fig. 31).

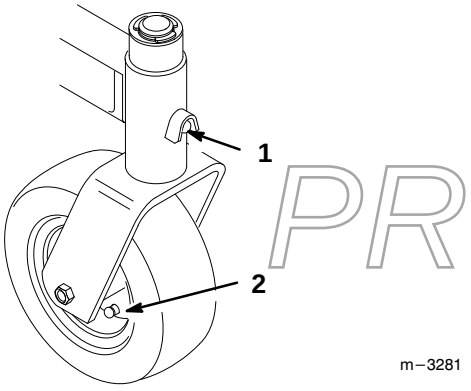

Figure 31

1. Carrier Frame Mounting Tube Grease Fitting
2. Castor Wheel Grease Fitting

Gearbox Fluid

Change fluid:

- After initial 100 operating hours.

  Note: Fluid will not have to be changed again after initial 100 hour fluid change.

Fluid Type: Automatic Transmission Fluid (Dexron® III or equivalent)

IMPORTANT: Do not mix fluids. Use only Automatic Transmission Fluid.

Gearbox Capacity: 5–1/2 oz. (129.6 ml) each box.

Check fluid: After every 100 operating hours.

Changing Gearbox Fluid

The gearbox fluid must be changed after first 100 operating hours. Change all three gearboxes.

IMPORTANT: Do not mix fluids. Use only Automatic Transmission Fluid.

1. Warm the fluid in gearbox by running the mower deck for a few minutes.

2. Remove two shields that cover gearbox and PTO shaft (Fig. 32).

PROTOTYPE

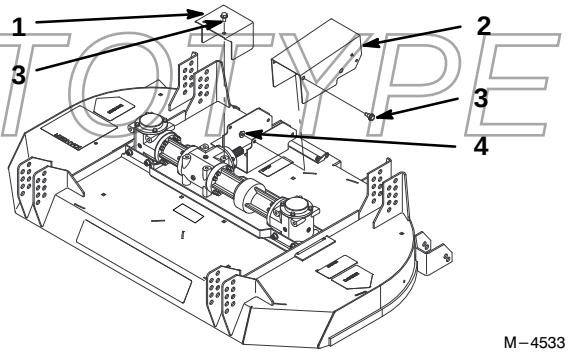

Figure 32

1. Gearbox Sheild
2. PTO Shield
3. Screw
4. Nut

3. Raise deck to upright position.

4. With deck raised, remove plug on the bottom side of the gearbox. Let fluid fully drain into a pan. (Fig. 33).

5. Reinstall the bottom plug into the gearbox (Fig. 33).

6. Remove the top plug to fill gearbox (Fig. 33).

7. Fill gearbox with 5–1/2 (129.6 ml) ounces of automatic transmission fluid (Dexron® III).

8. Reinstall the top plug into the gearbox (Fig. 33).

9. Repeat for remaining gearboxes.

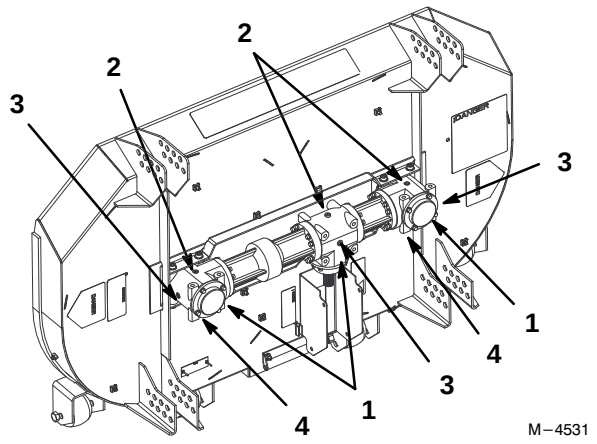

Figure 33

1. Gearbox
2. Top plug
3. Side plug
4. Bottom plug

Checking Gearbox Fluid

The gearbox fluid must be checked after every 100 operating hours. Check all three gearboxes.

1. Warm the fluid in gearbox. Run the mower deck for a few minutes.

2. Raise deck to upright position.

3. Remove plug on the side of the gearbox. The fluid level must be up to side hole in gearbox (Fig. 33).

4. If needed, fill automatic transmission fluid (Dexron® III) into top hole until it runs out the side hole in gearbox. It is full when it runs out the side hole (Fig. 33).

   IMPORTANT: Do not mix fluids. Use only Automatic Transmission Fluid.

5. Reinstall the top and side plugs into gearbox with pipe sealant (Fig. 33).

6. Fill gearbox with automatic transmission fluid (Dexron® III).

7. Repeat for remaining gearboxes.

PROTOTYPE

Replacing the Castor Wheel Fork Bushings

The castor wheel forks are mounted in bushings pressed into the top and bottom of the carrier frame mounting tubes. To check the bushings, move the castor forks back and forth and side-to-side. If a castor fork is loose, the bushings are worn and must be replaced.

1. Raise the cutting unit to the vertical position.
2. Remove the retaining ring and thrust washer(s) from the top of the castor wheel fork (Fig. 34).
3. Pull the castor wheel fork out of the mounting tube, leaving the spacer and thrust washers on the bottom of the fork. Remember the location of thrust washers on each fork to ensure correct installation, and to maintain a level deck.

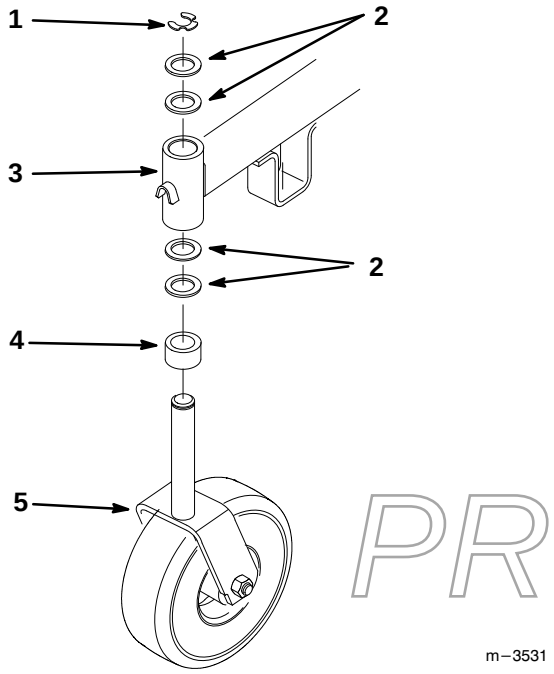

Figure 34

1. Retaining ring
2. Thrust Washer (4)
3. Carrier Frame Mounting Tube
4. Spacer
5. Castor Wheel Fork

4. Insert a pin punch into the mounting tube and carefully drive out the bushings (Fig. 35). Clean the inside of the mounting tube.
5. Grease the inside and outside of the new bushings. Use a hammer and flat plate to carefully drive the bushings into the mounting tube (Fig. 35).
6. Inspect the castor wheel fork for wear and replace if necessary (Fig. 34).
7. Slide the castor wheel fork through the bushings in the mounting tube. Replace the thrust washer(s) onto the fork and secure with the lynch pin (Fig 34).

   IMPORTANT: The inside diameter of the bushings may collapse slightly when installed. If the castor wheel fork does not slide into the new bushings, ream both bushings to an inside diameter of 1.126 in. (28.6mm).
8. Grease the fitting on the carrier frame mounting tube using No. 2 general purpose lithium base or molybdenum base grease.

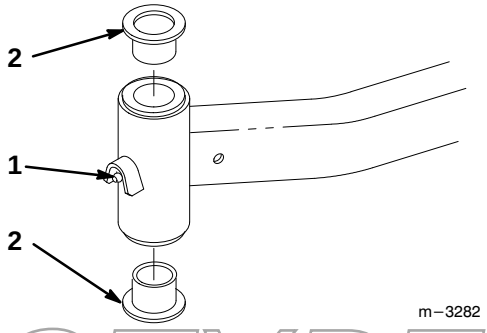

Figure 35

1. Carrier Frame Mounting Tube
2. Bushing

PROTOTYPE

Servicing the Castor Wheels and Bearings

The castor wheels rotate on a roller bearing supported by a spanner bushing. If the bearing is kept well lubricated, wear will be minimal. Failure to keep the bearing well lubricated will cause rapid wear. A wobbly castor wheel usually indicates a worn bearing.

1. Remove the locknut and wheel bolt holding the castor wheel to the castor fork (Fig. 36).

2. Remove the washer and bushing, then pull the spanner bushing and roller bearing out of the wheel hub (Fig. 36).

3. Remove the other bushing from the wheel hub and clean any grease and dirt from the wheel hub (Fig. 36).

4. Inspect the roller bearing, bushings, spanner bushing and inside of the wheel hub for wear. Replace any defective or worn parts (Fig. 36).

5. To assemble, place one (1) bushing into the wheel hub. Grease the roller bearing and spanner bushing and slide them into the wheel hub. Place the second bushing into the wheel hub (Fig. 36).

6. Install the castor wheel into the castor fork and secure with the wheel bolt and locknut. Tighten the locknut until the spanner bushing bottoms against the inside of the castor forks (Fig. 36).

7. Grease the fitting on the castor wheel.

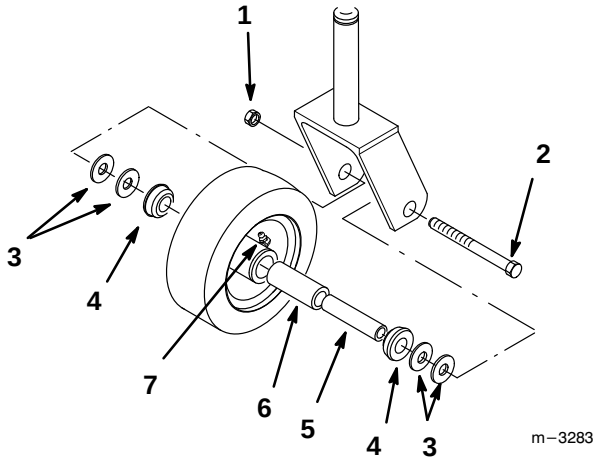

Figure 36

1. Locknut
2. Wheel Bolt
3. Washer
4. Bushing
5. Spanner Bushing
6. Roller Bearing
7. Grease fitting

PROTOTYPE

Replacing Push Arm Bushings

The push arms have pressed in bushings on the end mounted to the traction unit. To check the bushings, move the push arms side-to-side and examine for wear. If a push arm is loose, the bushings are worn and must be replaced.

1. Remove the mower: refer to Removing the Mower in the Installation section.

2. Inspect the pivot pin assembly for wear and replace if necessary.

3. Remove the retaining ring and flat washer securing the push arm to the mower (Fig. 37).

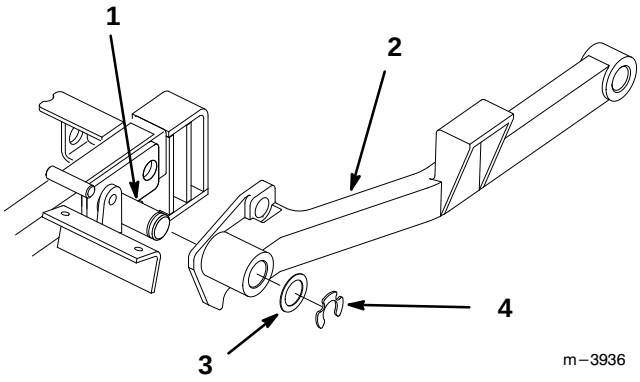

Figure 37

1. Pin
2. Push arm
3. Flat washer 1-1/2” (38 mm)
4. Retaining ring

4. Insert a pin punch into the push arm and carefully drive out the bushings (Fig. 38). Clean the inside of the push arm.

5. Use a hammer and flat plate to carefully drive new bushings into the end of push arm (Fig. 38).

6. Place push arm onto carrier frame pin and secure with 1-1/2” (38 mm) flat washer and retaining ring (Fig 37).

7. Grease the fitting on the push arm using No. 2 general purpose lithium base or molybdenum base grease.

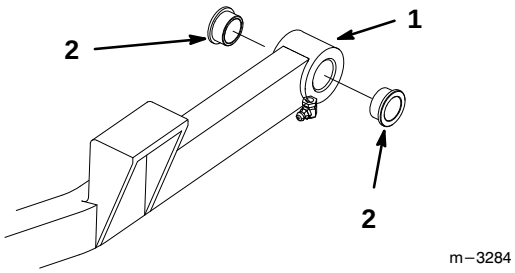

Figure 38

1. Push arm
2. Bushing

PROTOTYPE

Storage

1. Clean any dirt and chaff from the top of the mower.
2. Scrape any heavy buildup of grass and dirt from the underside of the mower, then wash the mower with a garden hose.
3. Check the condition of the blades. Refer to Cutting Blades on page 12.
4. Check and tighten all bolts, nuts and screws. Repair or replace any damaged or defective parts.
5. Paint all scratched or bare metal surfaces. Paint is available from your Authorized Service Dealer.
6. Store the machine in a clean, dry garage or storage area. Cover the machine to protect it and keep it clean.

PROTOTYPE

Troubleshooting

PROBLEM	POSSIBLE CAUSES	CORRECTIVE ACTION
Abnormal vibration.	1. Cutting blade(s) is/are bent or unbalanced.	1. Install new cutting blade(s).
	2. Blade mounting bolt is loose.	2. Tighten blade mounting bolt.
	3. Drive shaft bolts are loose.	3. Tighten drive shaft bolts.
	4. Loose gearbox assembly.	4. Tighten the appropriate hardware.
	5. Worn gearbox bearings.	5. Replace bearings.
	6. Gearbox gears are damaged.	6. Replace gears.
	7. Blade spindle bent.	7. Replace spindle.
	8. Universal joint worn.	8. Replace universal joint.
Uneven cutting height.	1. Blade(s) not sharp.	1. Sharpen blade(s).
	2. Cutting blade(s) is/are bent.	2. Install new cutting blade(s).
	3. Mower is not level.	3. Level mower from side-to-side and front-to-rear.
	4. Underside of mower is dirty.	4. Clean the underside of the mower.
	5. Tire pressure is incorrect.	5. Adjust tire pressure.
	6. Gearbox spindle bent.	6. Replace spindle.
Blades do not rotate.	1. PTO drive shaft is not attached.	1. Install drive shaft.
	2. PTO drive belt is broken.	2. Replace belt.
	3. Gearbox gears are damaged.	3. Replace gears.

PROTOTYPE

PROTOTYPE

PROTOTYPE



PROTOTYPE