TORO®

1968

OWNER'S OPERATING AND PARTS MANUAL



5 HP LAWN TRACTORS

MODEL 57001 AND MODEL 57050

(SERIAL NO. 800001 AND UP)

PRICE 25¢

OPERATING AND MAINTENANCE INSTRUCTIONS
WITH
PARTS LIST

5 HP Lawn Tractor

Models 57001 and 57050

The Lawn Tractor is a precision machine which will require a minimum of care. Keep it clean and well lubricated. Keep the blade sharp and balanced. Use it within its capabilities. If kept in good repair and adjustment, it is capable of providing years of dependable service.

The two models covered by this manual are similar in over-all design, with minor differences in trim and seating. A three-speed transmission is used on the Premium Model, with one lever for selecting among three forward speeds or reverse. The Standard Model uses a two-speed transmission, with one lever for selection of speed and another for forward-reverse.

GET YOUR TRACTOR READY TO WORK

PREPARE IT FOR OPERATION

1. To install the steering wheel, slide it down over the top of the steering column and align the holes.

2. Secure the steering wheel with the provided roll pin and replace the plug button.

3. Check the chassis to be sure that it has been lubricated.

4. Fill the engine crankcase with oil according to the engine manufacturer's instructions.

5. Fill the gasoline tank with any regular gasoline. Do not mix oil with the gasoline. Be sure the gasoline container is clean.

6. Squirt a drop or two of oil into the hole where each of the levers enters the transmission housing. Two levers enter the Standard Model transmission; one enters the Premium Model transmission.

BREAK IT IN PROPERLY

To break-in the engine and transmission, set the rear of the tractor on a block to raise the rear wheels a little above the floor, and operate the engine until it has used up one-half tank or more of gasoline. Shift the transmission into the various speeds during the break-in run, to assure breaking it in properly.

It is necessary to depress the clutch pedal in order to keep the transmission operating.

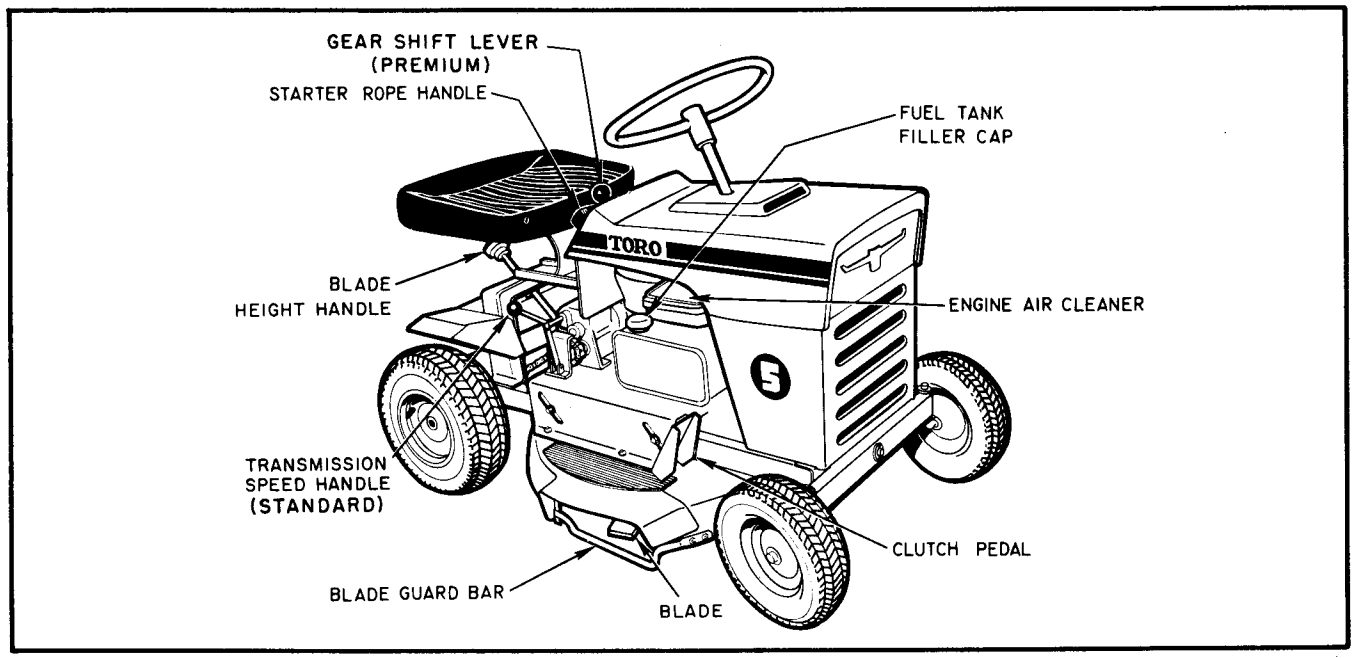

Figure 1. Controls and Inspection Points-Right Side

GET ACQUAINTED WITH YOUR NEW TRACTOR

GENERAL

Become familiar with your tractor before you put it to work. Read these instructions and the engine manufacturer's booklet. Be sure you know what the controls are for, and how they operate. Operate the tractor for a while on a driveway or sidewalk, to get the feel of the controls.

The amount of care the tractor requires is small but important. Keep it clean and well lubricated. Keep the blade sharp and balanced. Learn the tractor's capabilities and limitations. It is capable of giving you the years of dependable service you expect from any fine piece of machinery.

The life of your Lawn Tractor can be materially lengthened by complying with the simple rules set forth in this manual. Take time to consider your safety and the safety of those around you.

LEARN WHAT THE CONTROLS ARE FOR

These simple controls make your lawn tractor handy to operate.

1. The engine speed control lever has a CHOKE position (used for choking the engine), a RUN position which gives you control over the engine's speed, and a STOP position which stops the engine.

2. An automatic-recoil starter rope is included as a part of the engine.

3. The blade clutch starts and stops the operation of the blade. It also contains a brake to stop the blade when the clutch is disengaged.

4. The tractor clutch pedal engages the engine with the transmission, and makes the tractor move. It is spring-loaded to disengage the clutch when foot pressure is removed from the pedal.

5. The brake pedal stops the tractor by applying pressure to the left rear wheel of the Standard Model; and by squeezing a brake band around a brake drum on the transmission of the Premium Model.

6. The gear shift levers provide speed and directional control. Decals applied to the tractor indicate the positions of these levers.

7. You can change the cutting height by means of a simple bolt and jackscrew adjustment.

HOW TO START THE ENGINE

1. Be sure the reverse gear shift lever is in neutral, and the blade clutch is disengaged.

2. Move the engine speed lever to the CHOKE position.

3. Pull the starter rope handle swiftly. Do not let go of the handle as the rope rewinds. This helps prevent backlash in the rewind mechanism.

4. If the engine is warm, or if a cold engine does not start on the first pull, move the engine speed lever to the FAST position, and try again.

5. When restarting a hot engine, set the speed lever about in the middle.

6. As soon as the engine settles down to a steady, even speed, adjust the speed control lever to the speed you desire.

HOW TO STOP THE ENGINE

Stopping the engine is simple. Just move the engine speed control lever to the STOP position. Always disengage the blade clutch and put the transmission shift lever in neutral before you stop the engine.

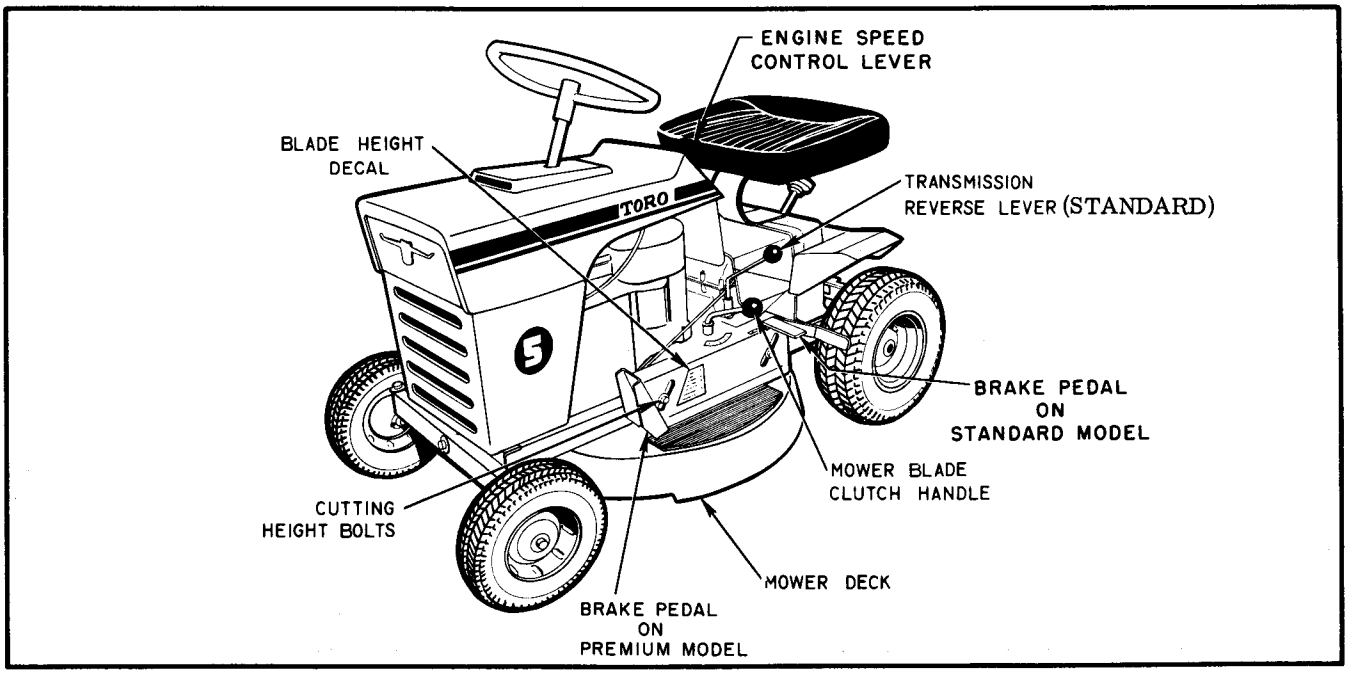

Figure 2. Controls and Inspection Points-Left Side

THINK OF SAFETY BEFORE YOU MOW

The mower blade is a powerful cutting tool. Treat it with the respect you would treat a buzz-saw. Before you use the mower, be sure you know these safety rules.

1. Never allow children or young teen-agers to operate the mower, unless properly supervised. Keep children and pets away from the area of the mower at all times while it is working.

2. Always keep hands and feet out from under the mower deck while the engine is running, and until you are SURE that the blade has stopped turning after the engine is shut off or the blade clutch disengaged. The blade will coast for several seconds.

3. Before you start mowing, walk over the area you're going to cut and pick up all debris which could be picked up and thrown by the blade. Sticks, stones and pieces of metal are a hazard to the mower, and when chopped to bits by the heavy blade, can be dangerous to pets and people.

4. Know how to stop the mower and the engine instantly.

5. When moving the tractor along paths and walks, and at all times when not actually cutting grass, keep the blade clutch disengaged.

6. Don't attempt any service operations while the engine is running. Disconnect the spark plug wire to prevent accidental starting.

7. When mowing high grass, start with the blade at its highest position. This lessens the danger of striking hidden objects. Then take a second cut after first checking to be sure there are no obstructions.

8. Fill the gasoline tank outdoors. Avoid spilling the gasoline. DON'T SMOKE WHILE FILLING THE TANK.

9. Stop the engine and disengage the blade clutch whenever you leave the tractor.

PUT YOUR MOWER TO WORK

CHOOSE THE RIGHT CUTTING HEIGHT

1. In general, use the same cutting height you have used before. You know what height is best for your own lawn.

2. When first using your mower, cut the grass a little longer than you did before, until you're sure that the greater cutting width will not cause scalping due to irregularities in the lawn.

3. If the grass is high, or if it contains lots of moisture, take a first cut with the blade set high. Then finish cutting with a lower blade setting. This gives a better distribution of the clippings and provides a cleaner second cut.

4. It is possible, by using care, to cut grass that is extremely high or wet. Set the blade at its highest position, and use low drive speed. Move into the area cautiously. Take a cut only half the width of the mower at each pass. Wet clippings may clog the mower housing, causing the blade to stall.

HOW TO SET THE CUTTING HEIGHT

A label on the left side of the mower indicates the cutting height of the blade. Adjust the cutting height as follows:

1. Loosen (but do not remove) the four locking bolts which fasten the engine mounting plate to the sides of the rider chassis.

2. Turn the knob, located under the tractor seat, clockwise to lower the height of the blade.

3. Turn the knob counterclockwise to raise the height of the blade.

4. BE SURE to tighten the four cutting height locking bolts at the sides of the chassis when the desired cutting height has been set.

NOTE

The arrows on the cutting height label indicate the height of the blade when they point to the center of the nearest cutting height locking bolt.

USE THE RIGHT SPEED

Use a low speed for pulling light loads and for mowing. This allows the blade to maintain a high RPM, and delivers most of the engine horsepower to the blade. It also gives you the best control of the tractor while trimming close to objects.

Use high speed for moving the tractor from place to place, when the blade is not turning.

For fine adjustment of traveling speed, use the engine speed control lever. Do not run the engine at slow speed while mowing. The blades uses most of the engine's horsepower to cut grass, and this requires a high engine speed.

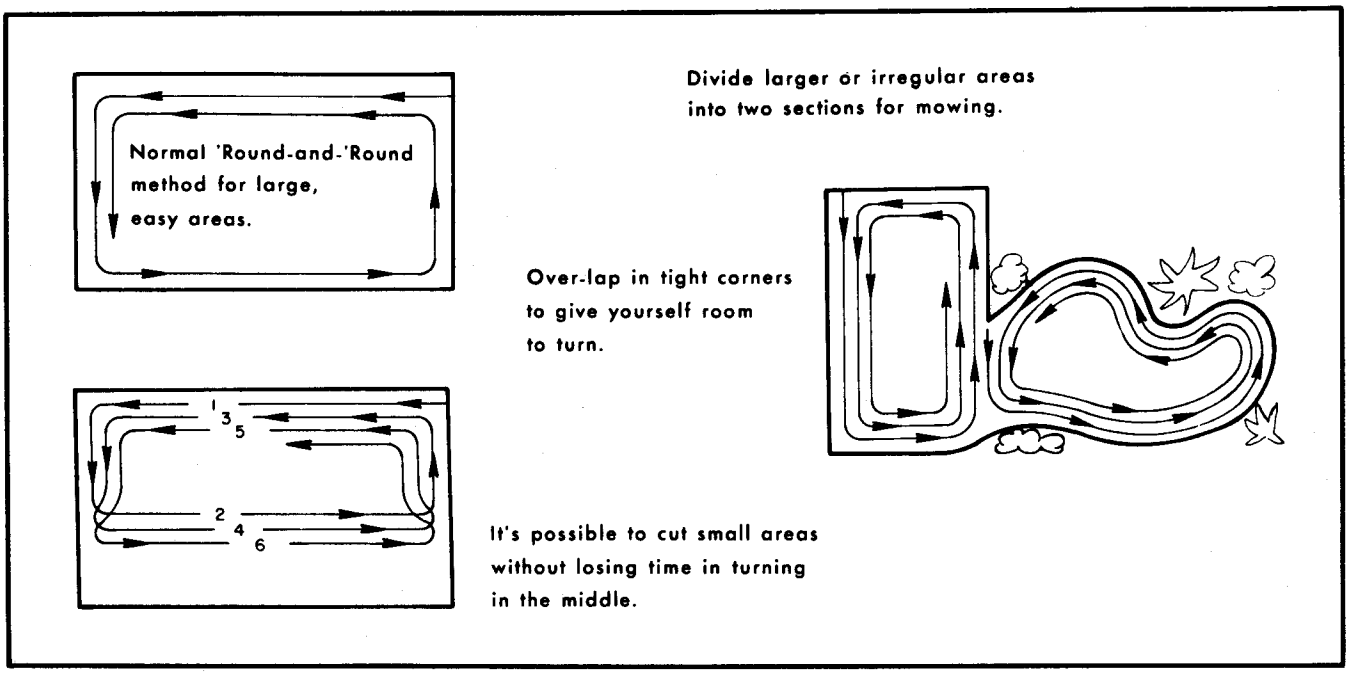

Figure 3. Efficient Planning of Your Mowing Saves Cutting Time

Slow down a little, by slipping the clutch slightly, while making tight turns. This avoids sliding sideways.

Forward and reverse on the Standard Model are the same speed; first and reverse on the Premium Model are the same speed. The mower will cut equally well in either direction.

IMPORTANT

Always make sure that the tractor has come to a complete stop before you attempt to change speed or shift direction.

SAVE MOWING TIME WITH PLANNING

1. Changing direction wastes time. Plan to keep the tractor moving forward as much as possible.

2. Plan for the longest straight runs possible.

3. Save close trimmings for the cleanup.

4. Try to work with the clippings discharging onto the already-cut areas, to prevent buildup of clippings in the uncut area. If the grass is unusually long or full of moisture, the clippings could impose an extra load on the blade, or cause uneven mowing because they prevent the grass from rising into the cutting path of the blade.

5. Sometimes it's easier to divide a large or irregular-shaped area into smaller sections to keep the mower working more steadily, or to keep from backing, turning or repeating too often.

6. In a small area, where tight turns would cause lost time in the center if the normal 'round-and-'round methods were used, try the cutting method shown in the illustration: make the second pass down the center of the area, rather than down the opposite side from the first pass. This allows you to swing wide at the end of each pass, and still cut all of the grass without too much reversing.

7. Avoid mowing on steep hills. The tractor will normally carry a full-grown operator up an average grade while cutting grass. Angle your cut across a hill, to reduce the effect of grade.

THE TRACTOR HAS LIMITS

Observing the limits of the tractor will help it serve you longer. Overloading and mistreatment can shorten its life or impair its usefulness, just as they can with any other fine tool or machine.

1. The engine is not guaranteed on a slope of more than 45 degrees in any direction, as it will not receive proper lubrication beyond this angle.

2. Keep the mower clean, especially around the blade. A buildup of grass clippings in the blade housing can impair the efficiency of the mower and cause uneven cutting.

3. If the tractor stalls due to an overload, but the engine continues to run, let out the clutch immediately. Start out again slowly. Failure to do this will cause excessive belt wear or breakage. If the tractor still fails to start, back up and find out why.

4. Do not operate the mower with the blade out of balance.

5. Avoid pulling loads that are so heavy they cause the drive belt to slip.

6. If the engine stalls due to overload, disengage the blade clutch and shift to neutral before restarting. Then, find out what caused the overload, and avoid it to make it easier when starting out again.

HOW TO USE THE CONTROLS

1. (a - Standard Model) To move the tractor, with the engine running, shift the direction control lever to forward or reverse as desired. (A label on the engine deck shows the position of this lever.) Push the speed control knob in for high speed to move the tractor, or pull it out for low speed for mowing or pulling loads.

1. (b. - Premium Model) Shift into the desired speed range or direction before pressing down on the clutch pedal. To change speed range or direction, bring the tractor to a complete stop before moving the shift lever. A label near the lever shows its operating positions.

2. Run the engine a little faster than its medium speed, by adjusting the engine speed control lever.

3. To make the tractor move, press down on the clutch pedal. When the clutch pedal is released, the tractor will stop.

4. After the tractor is moving, you can vary its speed a little by moving the engine speed control lever.

5. If you have trouble getting into any gear, jog the clutch pedal a little to get the gears into position where they will mesh. Never force any transmission selector lever.

CAUTION

Always bring the lawn tractor to a complete stop before changing direction or shifting speeds.

6. To stop the tractor, first release the clutch pedal and then press down on the brake pedal.

7. To make the blade turn, move the blade clutch lever slowly to the engaged position. This is an over-the-center position, and the blade clutch will stay engaged until the handle is moved back to the disengaged position.

8. To stop the blade, move the blade clutch lever to the rear, into the disengaged position. This applies a brake to the blade, to stop it more quickly than if it were allowed to coast to a stop.

CAUTION

Always stop the blade when you leave the mower, or when you are moving it from place to place without cutting grass.

ATTACHMENTS INCREASE YOUR LAWN TRACTOR'S USEFULNESS

MULCHER SCREEN

The mulcher screen which you received with your mower can be attached over the discharge opening of the mower deck. With this screen installed, you can ride over your lawn and dispose of dried fallen leaves without effort. The mower blade lifts them up, grinds them into pieces small enough to pass through the holes in the screen, and returns them to your lawn as a fine organic mulch.

To install the mulcher screen, remove the shrub bar from the discharge opening of the mower. Shape the screen to the inside of the blade housing. Attach to the same holes, using the bolts furnished with the shrub bar.

Better mulching action will result if you set your blade at a low cutting height. Be sure the leaves are dry before attempting to use the mulching attachment. Wet leaves will not be ground up finely enough to pass through the screen, and will soon clog it.

CAUTION

Be sure the engine is shut off and the blade clutch is disengaged before you attempt to clean a clogged mulcher screen.

OTHER ATTACHMENTS

In addition to providing power for your rotary mower, your lawn tractor can be used to pull a lawn roller, aerator, seeder or dump cart, all of which are available from the dealer. They attach to the drawbar at the rear of the chassis.

A snow plow may be attached to the front of the chassis.

Be sure the mower blade clutch is disengaged when using the attachments.

HOW TO KEEP
YOUR TRACTOR WORKING FOR YOU

The simple service required for your lawn tractor will result in longer life and dependable operation.

KEEP IT PROPERLY LUBRICATED

1. When lubricating the chassis, stand the tractor on its back end, and apply a drop or two of oil to all pivot points in the steering, brake, and clutch linkages. Lubricate the front and rear wheel bearings with a few drops of oil. (Do not stand the tractor on its front end. This will cause oil to enter the cylinder, resulting in extremely hard starting or in damage to the engine.)

2. Observe the engine manufacturer's oil requirements carefully. Failure to do so will not only void the warranty, but it could also result in engine failure. Keep the oil level high enough to meet the manufacturer's requirements.

3. After each 25 hours of operation, squirt a couple of drops of oil on the transmission shift lever opening (s). See page 20 for Lubrication Chart

4. The transmission and differential are sealed. They should not require the addition of lubricant for life, providing they are not overloaded or overheated.

KEEP THE BLADE SHARP AND BALANCED

Be sure that the mower blade is kept sharp and properly balanced. A dull blade wastes horsepower and does a poor cutting job. A blade out of balance is dangerous due to the high speed of rotation, and is likely to impose too high a sideways load on the mower blade spindle.

LET AUTHORIZED "TORO" SERVICE STATIONS PERFORM MAJOR SERVICE

Only if your lawn tractor is repaired correctly and if replacement parts really fit can maximum mowing results and safety be expected.

A thorough inspection of your tractor should be made at least once a year.

MAINTENANCE

TIRE PRESSURE

The lawn tractors use pneumatic tires and tubes on the rear wheels. The tires should be inflated from 16 to 18 pounds pressure. (Semi-pneumatic tires are used on the front wheels. These tires will not require inflation.)

LUBRICATION

Note that the engine used has no dip stick for checking oil. Instead, to check the oil, remove the plug from the filler opening located on the right hand side of the engine. The oil in the engine crankcase should be up to the top of the filler opening at all times.

In addition to the lubrication procedures described, it is a good idea to clean all lubrication points of the tractor and mower occasionally, to prevent buildup of dust and foreign matter on the parts.

ADJUSTMENTS

Adjustments required for the lawn tractor are simple and infrequent. A spring-loaded idler on the drive belt maintains proper tension, so that adjustment is not required.

Carburetor adjustments are covered in the engine manufacturer's instruction manual, which is furnished.

No other adjustments are required.

WINTERIZATION

Winterization for Storage

When it is time to store the lawn tractor for the winter, clean it thoroughly of all grass clippings, mud and dust. Wipe all lubrication points clean and lubricate. The fuel tank and carburetor have no provision for draining. To remove the gasoline and thus prevent gummy deposits, run the engine out of gas.

Drain the oil from the engine crankcase and refill with the grade of oil which is recommended for warm-weather operation.

CAUTION

Do not over-fill the engine.

Stand the tractor on its rear end, and remove the spark plug from the engine. Put about one or two tablespoons of engine oil into the spark plug hole, slowly, while turning the engine slowly by hand to allow the piston to distribute the oil evenly in the cylinder. Replace the spark plug with an old plug which will not be used again, or plug the hole with a cork. (This prevents fouling a good plug with the oil used to preserve the cylinder and piston.

In the spring, remove the old spark plug or the cork, flush the cylinder with about 1/4 to 1/2 cup of fresh gasoline, and blow dry with compressed air.

Replace the good spark plug, after being sure it is clean and properly gapped according to the engine manufacturer's instructions. Check the oil in the engine. Fill the fuel tank. The tractor is now ready for operation.

Winterization for Operation

If the tractor is to be used during the winter months, clean and lubricate in the same manner as for storage. Drain the engine crankcase and refill with oil as recommended by the manufacturer for the temperature range expected. Be sure the spark plug is clean and properly gapped according to the engine manufacturer's instructions.

In the spring, drain and refill the engine crankcase with the normally-recommended weight of oil, and service the entire tractor carefully, according to the instructions in this manual.

BLADE MAINTENANCE

It is important that the blade be kept sharp and in balance. A dull blade wastes power, and does a poor grass-cutting job. A blade which is out of balance imposes too-high a sideways load on the bearings, and causes dangerous vibrations.

When sharpening blade, always take equal amounts of metal off both cutting edges. Replace a blade which shows any signs of cracks or crystallization, to prevent its disintegration at high rotating speeds.

Inexpensive blade balancers are available, to assure that the blade is in balance after sharpening. In case sharpening results in an out-of-balance blade, grind some more metal off the heavy end.

Use only genuine Toro replacement blades. Substitutes may endanger performance and personal safety.

REMOVAL AND REPLACEMENT OF PARTS

CAUTION

Before performing any service operations on the mower, be sure to disconnect the spark plug wire to prevent accidental starting of the engine.

BLADE

Stand the tractor on the rear end. Free the spindle nut with the appropriate wrench while holding the blade. When the spindle nut has broken loose, hold the shaft with a large screwdriver in the slot provided. Completely remove the nut and washer.

Note the position of the two large washers and one small flat washer, so that you can replace them in the same position (see fig. 4). Also notice the way the blade is installed; it can be installed upside down in which case the mower will not cut. Tighten the spindle nut securely. If the spindle nut loosens the blade will slip and will not cut properly.

TRACTOR DRIVE BELT

The drive belt of the tractor can be replaced by taking the engine off the chassis. To do this, remove the three bolts that hold the engine to the engine base. Also remove the bolt that holds the front belt guide to the engine base. This bolt is located just in front of the left front corner of the engine. Lift the engine from the tractor, being careful not to lose the shim washer which is under the left front corner of the engine.

The belt can now be removed.

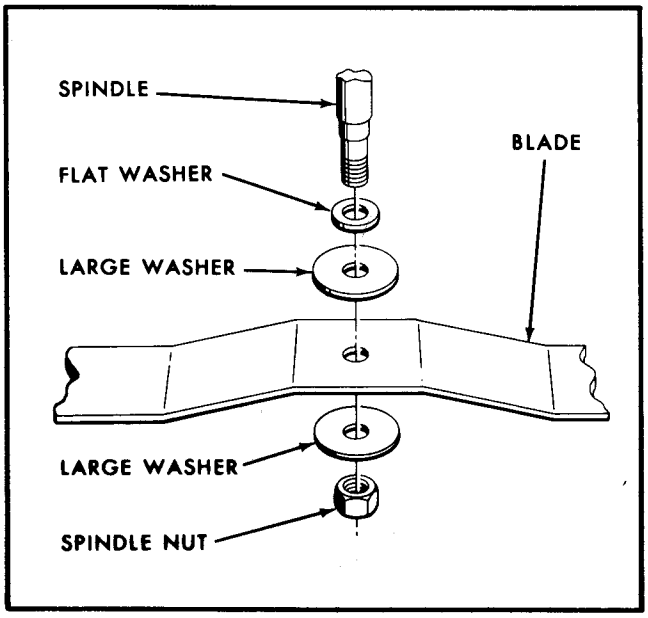

Figure 4. Installation of Blades

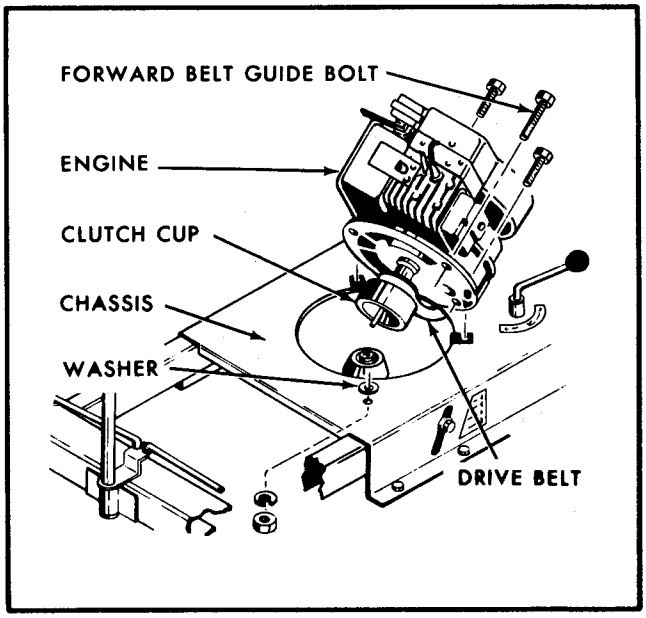

Figure 5. Installation of Drive Belt

To replace the belt, engage it in the transmission pulley first, then in the engine pulley. After re-engaging the belt, assemble the engine to the engine base, using locating pin to insure proper alignment.

IMPORTANT

Leave the engine mounting bolts loose until the blade clutch has been engaged with the clutch cup on the engine crankshaft, to be sure of proper alignment.

Before tightening the engine mounting bolts, move the blade clutch lever to the ENGAGED position. This aligns the engine with the clutch cone. Tighten the three engine mounting bolts securely and disengage the blade clutch. Check to make sure that the belt is in the proper position, then reinstall the belt guide.

CLUTCH CONE

If the blade clutch cone should need replacement, remove the engine as described above. With the engine off, move the belt clutch lever slowly to the ENGAGED position, and slide the clutch cone up off the blade shaft.

Be careful not to lose the two brake shoes that operate the blade clutch. If they come off the pins, replace them so that the thicker part of the shoe is downward, or toward the blade. (See fig. 6).

Reinstall the engine in the same manner as for the tractor drive belt.

ENGINE AND TRANSMISSION

To remove and replace the engine, follow the instructions given for replacing the tractor drive belt.

Any necessary repair of the engine should be done by one of the engine manufacturer's authorized service stations.

If the transmission should require repair, contact the most convenient TORO service station. To remove the transmission from the mower chassis, take off the transmission belt as described before. Remove the drive chain by separating the master link. Take out the bolts and nuts which attach the transmission to the chassis.

Replace the transmission in the reverse order.

BEARINGS

The rear axle bearings are self lubricating. However, Zerk fittings are provided and periodic lubrication is recommended. To replace these bearings, disassemble the rear end of the tractor far enough to make the axle bearings accessible. Press out the old bearings and press in the new ones. Reassemble the tractor.

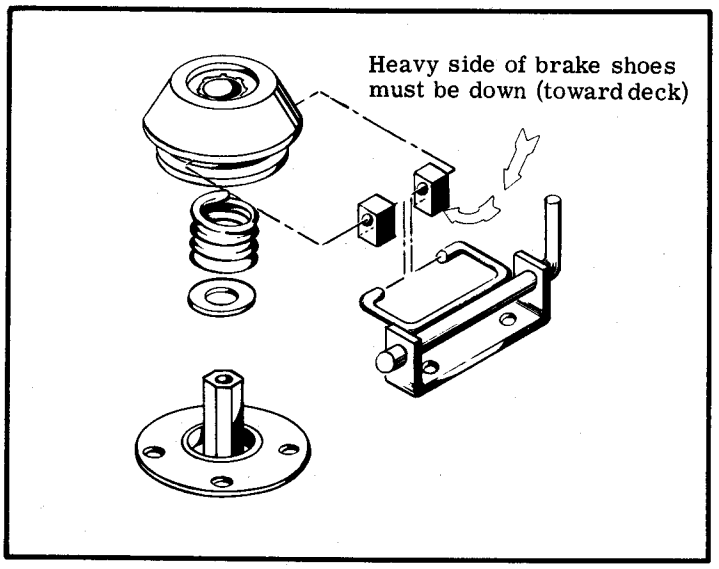

Figure 6. Installation of Clutch and Brake Shoe

CONTACT YOUR LOCAL
TORO DEALER
FOR REPAIR PARTS,
MOWER SERVICE AND
LAWN CARE INFORMATION



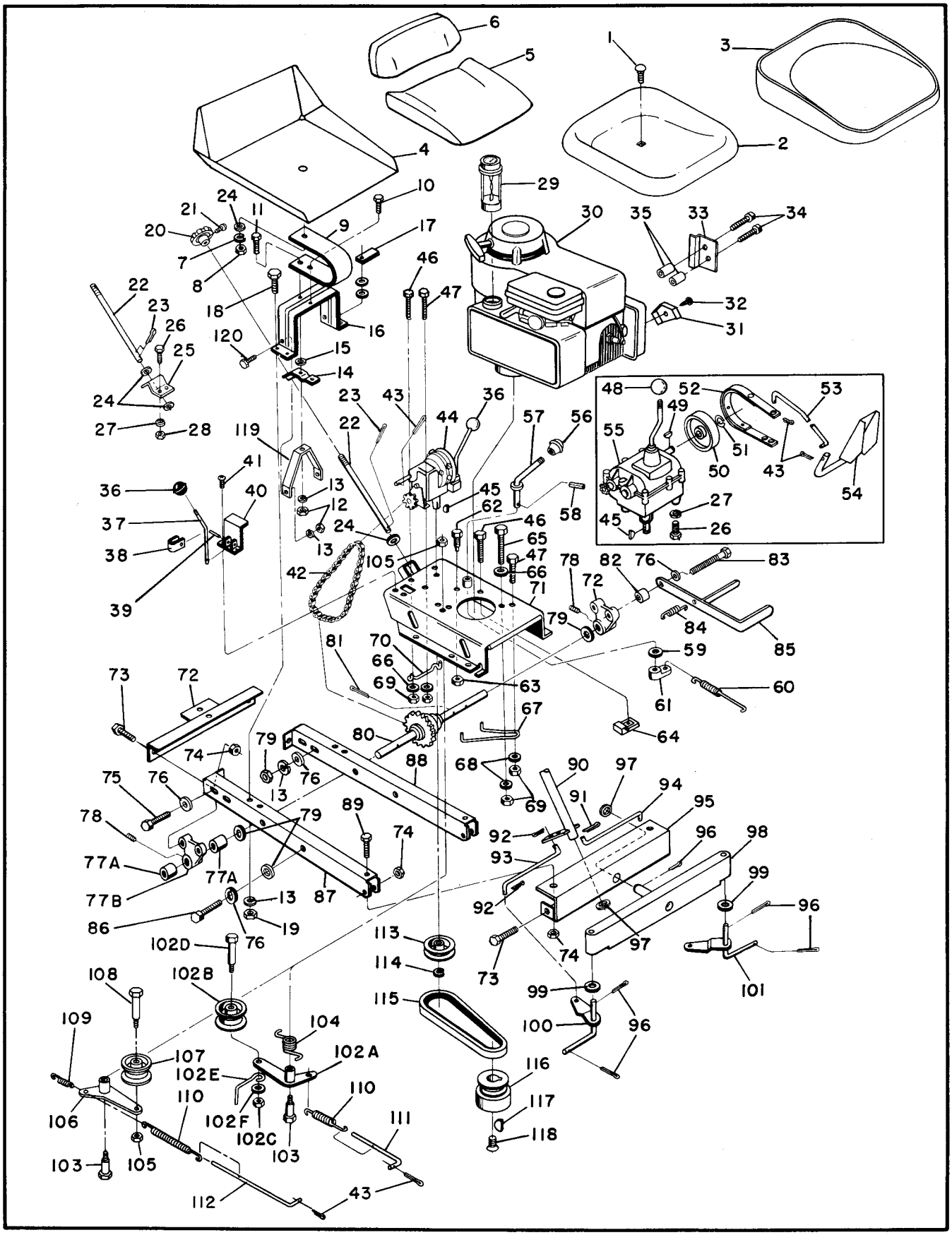

Figure 7. Chassis and Engine Assembly

Figure 7. Chassis and Engine Assembly

Ref. No.	Part No.	Description	Model 57001	Model 57050
1	3233-1	Carriage Bolt	1	-
2	3-6605	Frame, Seat	1	-
3	7-3626	Cushion, Seat	1	-
4	7-3595	Frame, Seat	-	1
5	7-3352	Cushion, Seat	-	1
6	7-3351	Cushion, Back	-	1
7	3253-7	Lockwasher	1	1
8	3218-5	Nut, Jam	1	1
9	7-3555	Spring, Seat	1	1
10	323-7	Cap Screw	1	1
11	323-8	Cap Screw	1	1
12	3217-7	Hex Nut	4	4
13	3253-21	Lockwasher	10	10
14	7-3207	Adjustment Strap	1	1
15	3256-24	Flat Washer	1	1
16	7-3203	Support, Seat	1	1
17	7-3448	Stop, Brake	1	-
18	323-4	Cap Screw	6	6
19	3217-7	Hex Nut	12	12
20	7-0741	Handle, Height Adjustment	1	1
21	32140-57 S	Screw	1	1
22	7-3205	Screw, Height Adjustment	-	1
22	7-0740	Screw, Height Adjustment	1	-
23	32121-4	Roll Pin	1	2
24	3256-26	Flat Washer	2	3
25	7-3202	Bracket, Adjustment	-	1
26	322-2	Cap Screw	-	6
27	3253-4	Lockwasher	-	6
28	3218-2	Nut, Jam	-	2
29	7-0214	Gas Gage	-	1
30	221-296	Engine, 5 HP	1	1
31	7-3503	Deflector, Exhaust	1	1
32		Screw (Supplied with Engine)	1	1
33	7-0745	Baffle	1	1
34	321-14	Cap Screw	2	2
35	7-0746	Spacer	2	2
36	2119-368 S	Knob	2	-
37	7-0744	Shift Lever	1	-
38	7-0743	Clip, Shift Lever	1	-
39	32121-77 S	Rollpin	1	-
40	7-0742	Shield, Chain	1	-
41	32140-50 S	Screw	2	-
42	7-3570	Chain, Drive	1	-
42	7-3500	Chain, Drive	-	1
43	3272-7	Cotter Pin	4	4
44	7-0754	Transmission Assy	1	-
45	3257-5	Key, Woodruff	1	1
46	322-6	Cap Screw	4	2
47	322-5	Cap Screw	1	1
48	233-22	Knob	-	2
49	3257-32	Key, Woodruff	-	1
50	7-3163	Drum, Brake	-	1

Ref. No.	Part No.	Description	Model 57001	Model 57050
51	32120-19	Ring, Retaining, External "E"	-	1
52	7-3648	Brake Band Assy	-	1
53	7-3160	Rod, Brake	-	1
54	7-3194	Brake Pedal	-	1
-	7-3241	Pad, Foot	-	1
55	7-3201	Transmission Assy	-	1
56	233-18 S	Knob	1	-
57	7-0138	Blade Rod Assy	1	-
57	7-3196	Blade Rod Assy	-	1
58	32121-50	Roll Pin	1	1
59	3290-212	Washer, Wave	1	1
60	7-0734	Spring, Blade Control	1	1
61	7-0733	Blade Lever	1	1
62	323-6	Cap Screw	1	1
63	3218-3	Nut, Jam	1	1
64	3290-292 S	Nut, Retainer	2	2
65	322-9	Cap Screw	1	1
66	3256-3	Flat Washer	3	-
67	7-0725	Belt Guide	1	-
67	7-3208	Belt Guard	-	1
68	7-0726	Flat Washer	1	1
69	32152-1 S	Nut, Conelock	6	2
70	7-0736	Belt Guide	1	-
71	7-3562	Engine Mounting Plate Assy	1	-
71	7-3211	Engine Mounting Plate Assy	-1	1
72	7-3155	Frame, Rear	1	1
73	321-2	Cap Screw	7	9
74	32152-4 S	Nut, Conelock	12	14
75	323-10	Cap Screw	3	4
76	3256-4	Flat Washer	12	12
77	7-0688	Support Assy, Rear Axle	2	2
77A	256-76	. Bushing, Bronze	2	2
77B	7-0713	. Support, Rear Axle	1	1
78	302-43 S	Zerk Fitting	2	2
79	7-0126	Flat Washer	3	3
80	7-3405	Differential (with Rear Axle)	1	1
81	3272-23	Cotter Pin	1	1
82	7-3450	Pivot, Brake	1	-
83	323-11	Cap Screw	1	-
84	7-0694	Centering Spring	1	-
85	7-0692	Foot Brake	1	-
86	32140-33	Hex Head Sems Screw	4	4
87	7-3154	Frame Assy, R. H.	1	1
88	7-3153	Frame Assy, L. H.	1	1
89	321-15	Cap Screw	2	2
90	7-3171	Steering Shaft Assy	1	1
91	3272-12	Cotter Pin	1	1
92	3272-10	Cotter Pin	4	4
93	7-3197	Tie Rod, R. H.	1	1
94	7-3198	Tie Rod, L. H.	1	1
95	7-3178	Frame, Front	1	1

Figure 7. Chassis and Engine Assembly (Continued)

Ref. No.	Part No.	Description	Model 57001	Model 57050
96	3272-11	Cotter Pin	5	5
97	3256-27	Flat Washer	2	2
98	7-3181	Front Axle	1	1
99	7-0131	Flat Washer	2	2
100	7-3176	Spindle, R.H.	1	1
101	7-3175	Spindle, L.H.	1	1
102	7-0728	Idler Arm Assy	1	-
102A	7-0750	. Idler Arm	1	-
102B	7-0136	. Pulley, Idler	1	-
102C	32152-2 S	. Nut, Conelock	1	-
102D	323-8	. Cap Screw	1	-
102E	7-0751	. Belt Retainer	1	-
102F	3256-3	. Flat Washer	1	-
103	7-0731	Shoulder Bolt	1	1
104	7-0730	Spring, Torsion	1	-
105	32152-2 S	Nut, Conelock	1	1

Ref. No.	Part No.	Description	Model 57001	Model 57050
106	7-3185	Idler Arm Assy	-	1
107	7-0136	Pulley, Idler	-	1
108	323-8	Cap Screw	-	1
109	7-3606	Spring, Clutch Return	-	1
110	7-0393	Spring	1	1
111	7-0732	Rod, Clutch	1	-
112	7-3192	Rod, Clutch	-	1
113	7-0755	Pulley, Transmission	1	1
114	32120-64	Ring, Retaining	1	1
115	7-0737	V-Belt	1	-
115	7-0824	V-Belt	-	1
116	7-0723	Cup, Clutch	1	1
117	3257-3	Key, Woodruff	1	1
118	7-0724	Screw, Clutch	1	1
119	7-3592	Brace, Seat Support	1	1
120	323-5	Cap Screw	2	2

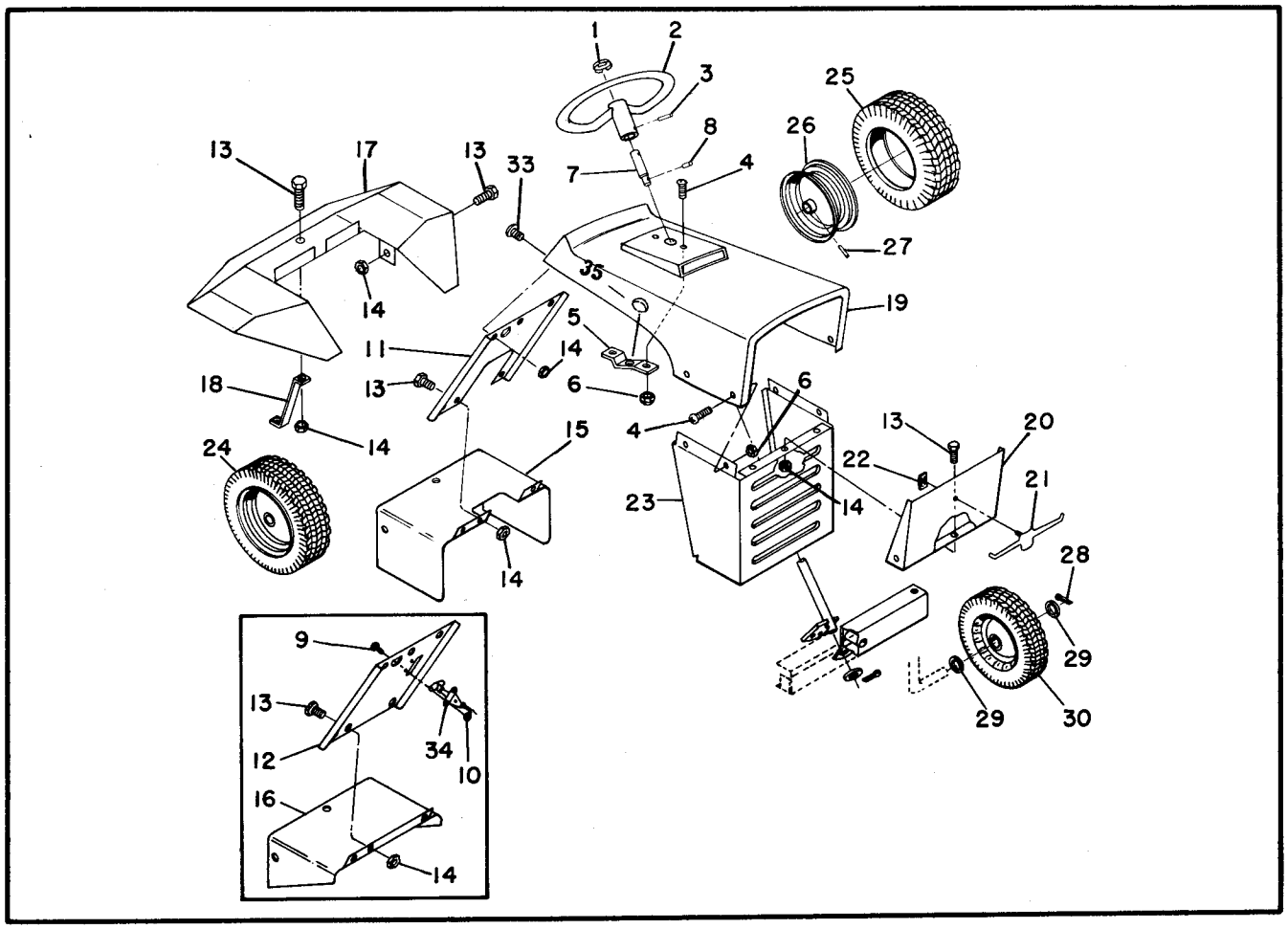

Figure 8. Hood, Fender and Wheel Group

Ref. No.	Part No.	Description	Model 57001	Model 57050
1	7-0921	Steering Wheel Cap	-	1
1	2410-24 (S)	Plug Button	1	-
2	7-0470	Steering Wheel	-	1
2	7-3232	Steering Wheel	1	-
3	32121-24	Rollpin	1	1
4	3258-158 (S)	Screw	6	6
5	7-3215	Bracket, Steering	1	1
6	32152-1 (S)	Nut, Conelock	2	2
7	7-3504	Extension, Shaft	-	1
8	32121-11	Rollpin	-	1
9	32122-43 (S)	Screw	2	2
10	32149-6	Kepsnut	2	2
11	7-3560	Hood Support Assy	-	1
12	7-3375	Hood Support Assy	1	-
13	321-3	Cap Screw	9	9
14	32152-4 (S)	Nut, Conelock	12	12
15	7-3225	Chain Guard	-	1
16	7-3236	Support, Hood	1	-
17	7-3216	Fender, Rear	1	1
18	7-3235	Support, Fender	1	1

Ref. No.	Part No.	Description	Model 57001	Model 57050
19	7-3217	Hood	1	1
20	7-3451	Panel, Grille	1	1
21	7-3441	Bulls Head, Grille	1	1
22	3290-275	Nut, Tinnerman	3	3
23	7-3605	Grille Assembly	1	1
24	7-3183	Rear Tire and Wheel Assembly	2	2
25	231-49 (S)	. Tire	2	2
-	232-27 (S)	. Valve	2	2
26	217-84(S)	. Rim	2	2
27	32121-9	Rollpin	2	2
27	32121-51	Rollpin	2	2
28	3272-11	Cotter Pin	2	2
29	7-0131	Flat Washer	4	4
* 30	7-3220	Front Tire and Wheel Assembly	2	2
33	3258-157 (S)	Screw	3	3
34	7-3233	Throttle Control	1	1
35	256-137	Nyliner	1	1

* Ref. #30 Includes (2) 256-170 (s) Bearings and (1) 302-5 Zerk.

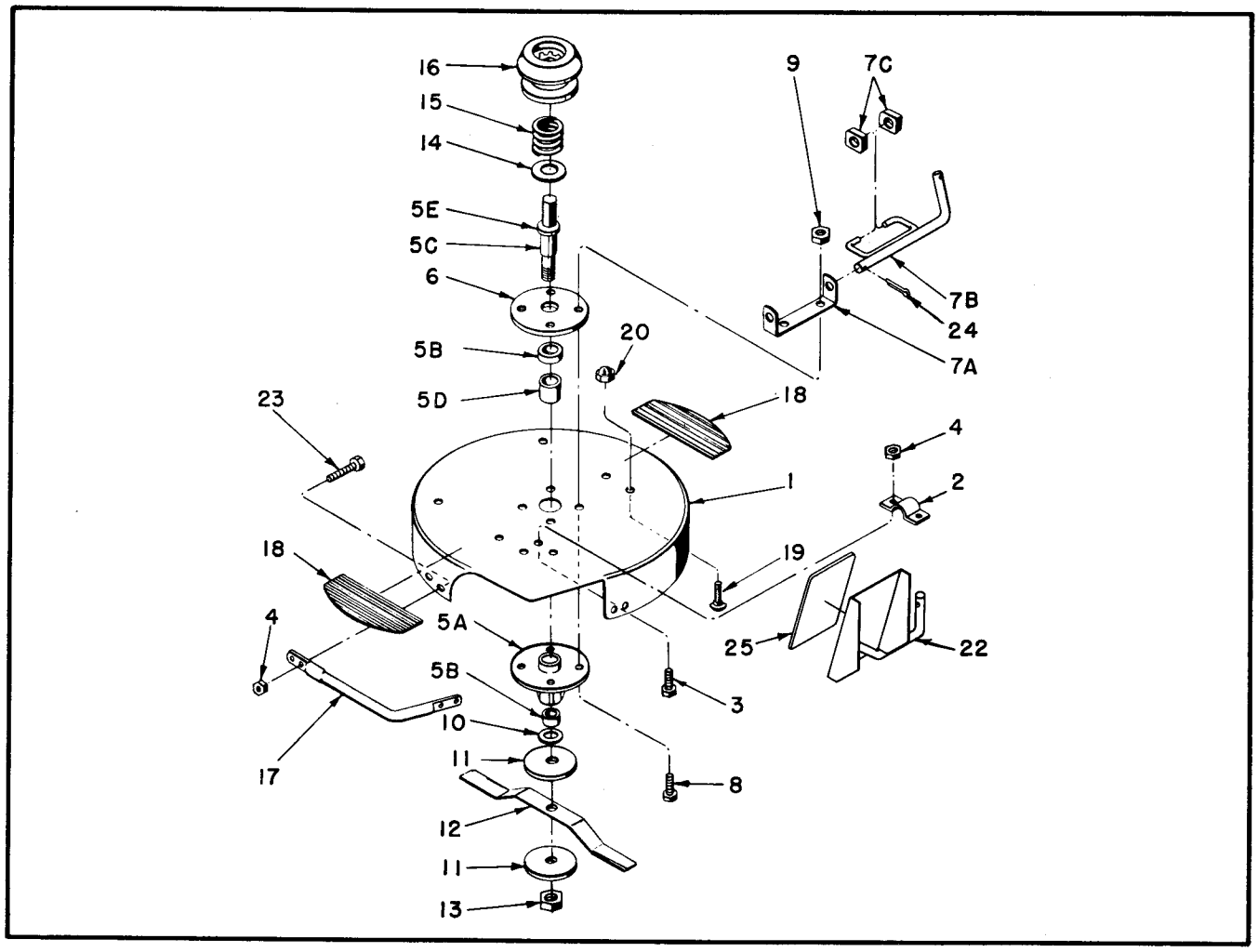

Figure 9. Mower Housing Assembly

Ref. No.	Part No.	Description	Model 57001	Model 57050
1	7-3200	Mower Housing	1	1
2	7-0763	Bracket, Clutch	1	2
3	321-2	Cap Screw	2	4
4	32152-4 S	Nut, Conelock	6	8
5	7-3323	Blade Spindle and Housing Assy	1	1
	7-0774	a. Spindle Housing	1	1
	251-5	b. Bearing	2	2
	7-3182	c. Spindle	1	1
	7-0776	d. Spacer, Spindle	1	1
	7-0777	e. Washer, Bearing	1	1
6	7-0252	Flat Washer	1	1
7		Blade Control Bracket Assy	1	1
	7-3190	a. Bracket, Blade Control	1	1
	7-0780	b. Blade Throwout Assy	1	1
	7-0781	c. Brake Shoe	2	2

Ref. No.	Part No.	Description	Model 57001	Model 57050
8	322-4	Cap Screw	4	4
9	32152-1 S	Nut, Conelock	4	4
10	7-3590	Flat Washer	1	1
11	7-0253	Washer, Blade	2	2
12	7-3594	Blade	1	1
13	32152-6 S	Nut, Conelock	1	1
14	7-0767	Washer, Thrust	1	1
15	7-3222	Spring, Blade Clutch	1	1
16	7-0770	Clutch Disc. Assy	1	1
17	7-0256	Blade Guard	1	1
18	7-0771	Foot Pad	2	2
19	7-0250	Carriage Bolt	6	6
20	32151-1	Nut, Conelock	6	6
21	3253-4	Lockwasher	6	6
22	7-3195	Clutch Pedal Assy	1	1
23	3229-11	Carriage Bolt	4	4
24	3272-6	Cotter Pin	2	2
25	7-3241	Foot Pad	1	-

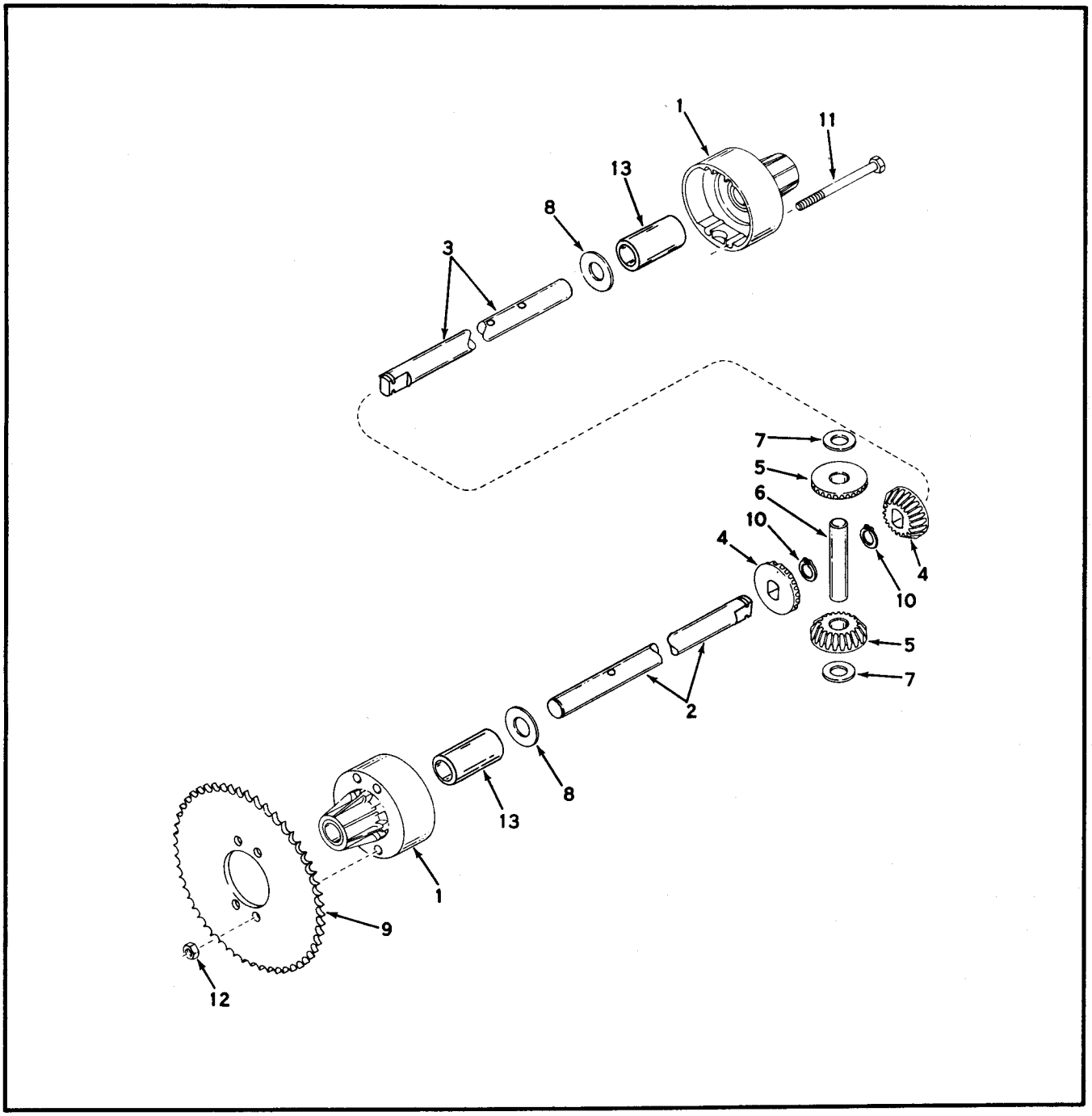

Figure 10. Differential Assembly, Part No. 7-3405

Ref. No.	Part No.	Description	Qty
1	774073	Housing, Differential Carrier	2
2	774118	Axle (8-59/64" long)	1
3	774119	Axle (12-37/64" long)	1
4	778067	Gear, Bevel	2
5	778068	Gear, Pinion	2
6	786040	Pin, Drive	1
7	780073	Washer, Thrust	2

Ref. No.	Part No.	Description	Qty
8	780001	Washer	2
9	786042	Sprocket (40 teeth)	1
10	788038	Ring, Snap	2
11	792041	Screw, Hex Head 5/16-18 x 3-3/4	4
12	792042	Nut, Lock 5/16-18	4
13	780077	Bushing	2

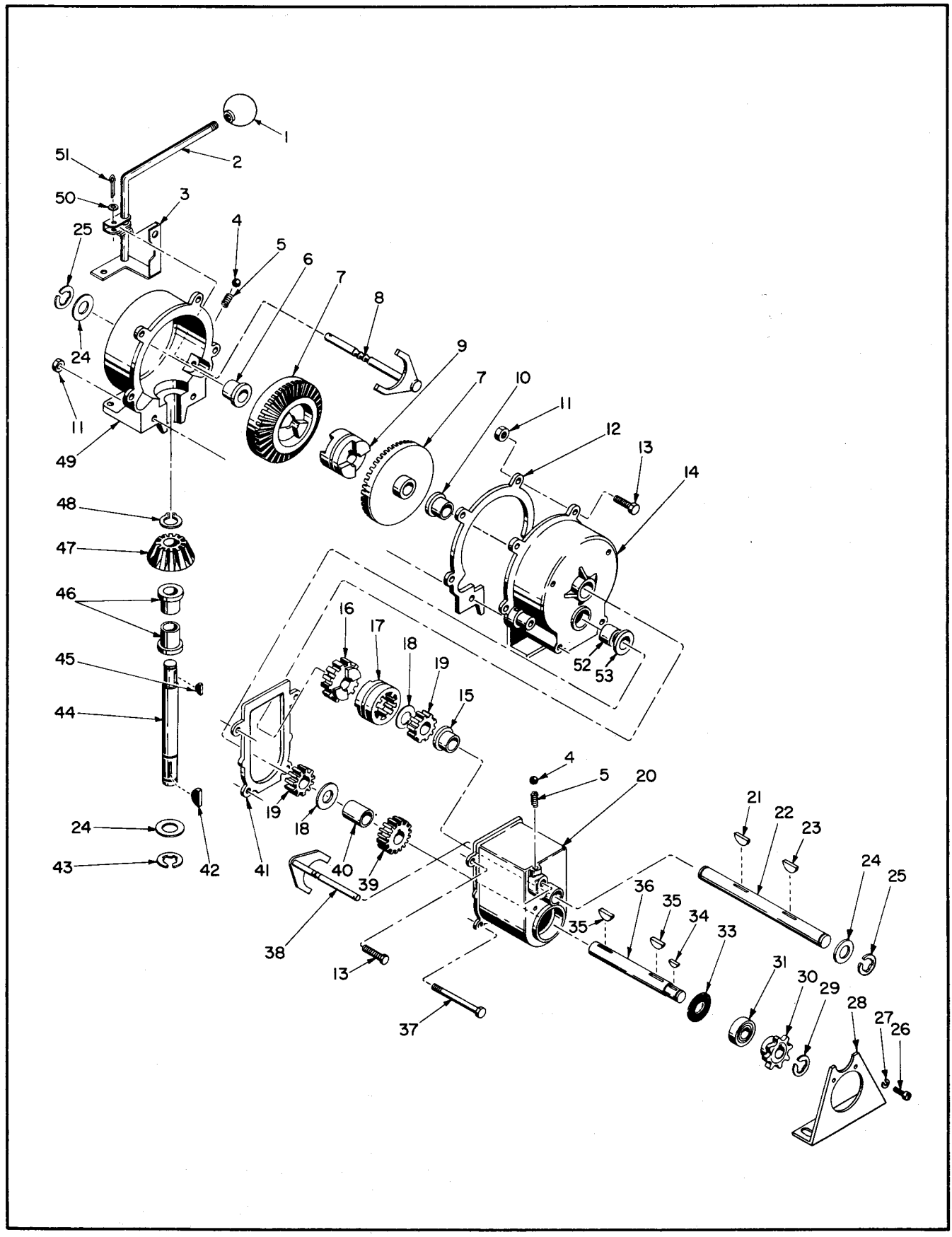

Figure 11. Transmission (Two-Speed)

Figure 11. Transmission (Two-Speed)

Ref. No.	Part No.	Description	Qty
1	2119-368(S)	Knob, Shifter	1
2	2119-369(S)	Shifter Lever Assy	1
3	2119-370(S)	Bracket, Shift Lever	1
4	255-1	Ball, Detent	2
5	2119-130	Spring, Detent	2
6	2119-127	Bearing, Flange	1
7	2119-122	Bevel Gear (Hardened)	2
8	2119-371(S)	Detent Shaft Assy	1
9	2119-123	Clutch Collar	1
10	2119-144	Bearing, Flange, 1-1/4 in. flange	1
11	3296-8	Nut	6
12	2119-132	Gasket (0.006)	1
13	321-3	Screw	6
14	2119-151	Housing Half	1
15	2119-143	Bearing, Flange, 1 in. flange	1
16	2119-137	Gear (17T-Int. shaft)	1
17	2119-139	Clutch Collar	1
18	2119-129	Washer, Flat, 1/32 in. thick	2
19	2119-136	Gear (13T)	2
20	2119-134	Housing, 2 speed	1
21	3257-23	Key, Hi-Pro No. 606	1
22	2119-372(S)	Shaft, Internal	1
23	2119-373(S)	Key, HI-Pro No. 606 (0.875)	1
24	2119-129	Washer, 1/16 inch thick	3
25	32120-81	Snap Ring (1000-62)	2
26	3252-2	Screw	2

Ref. No.	Part No.	Description	Qty
27	3253-17	Lockwasher	2
28	2119-145	Bracket, Outboard	1
29	32120-82	Snap Ring (1000-50)	1
30	2119-125	Sprocket (8T-No. 41)	1
31	251-156	Bearing, Ball	1
33	2119-131	Shim, 0.010 in. thick	1
34	3257-27	Key, Woodruff, No. 4	1
35	3257-24	Key, Woodruff, No. 5	2
36	2119-149	Shaft, Output	1
37	321-14	Screw	2
38	2119-142	Detent Shaft Assy	1
39	2119-138	Gear (17T-Output Shaft)	1
40	2119-146	Spacer	1
41	2119-147	Gasket (0.020)	1
42	3257-5	Key, Woodruff, No. 9	1
43	32120-79	Snap Ring (3100-62)	1
44	2119-374(S)	Shaft, Input	1
45	3257-21	Key, Woodruff, No. 2	1
46	2119-375(S)	Bearing, Flanged, Keyed	2
47	2119-121	Pinion, Bevel	1
48	32120-80	Snap Ring	1
49	2119-153	Housing Half, with detent hole	1
50	3253-1	Washer, Flat, 9/32 o.d. x 1/8 i.d. x 22 ga.	1
51	3272-7	Pin, Cotter	1
52	252-50	Needle Bearing	1
53	2119-154	Thrust Washer	1

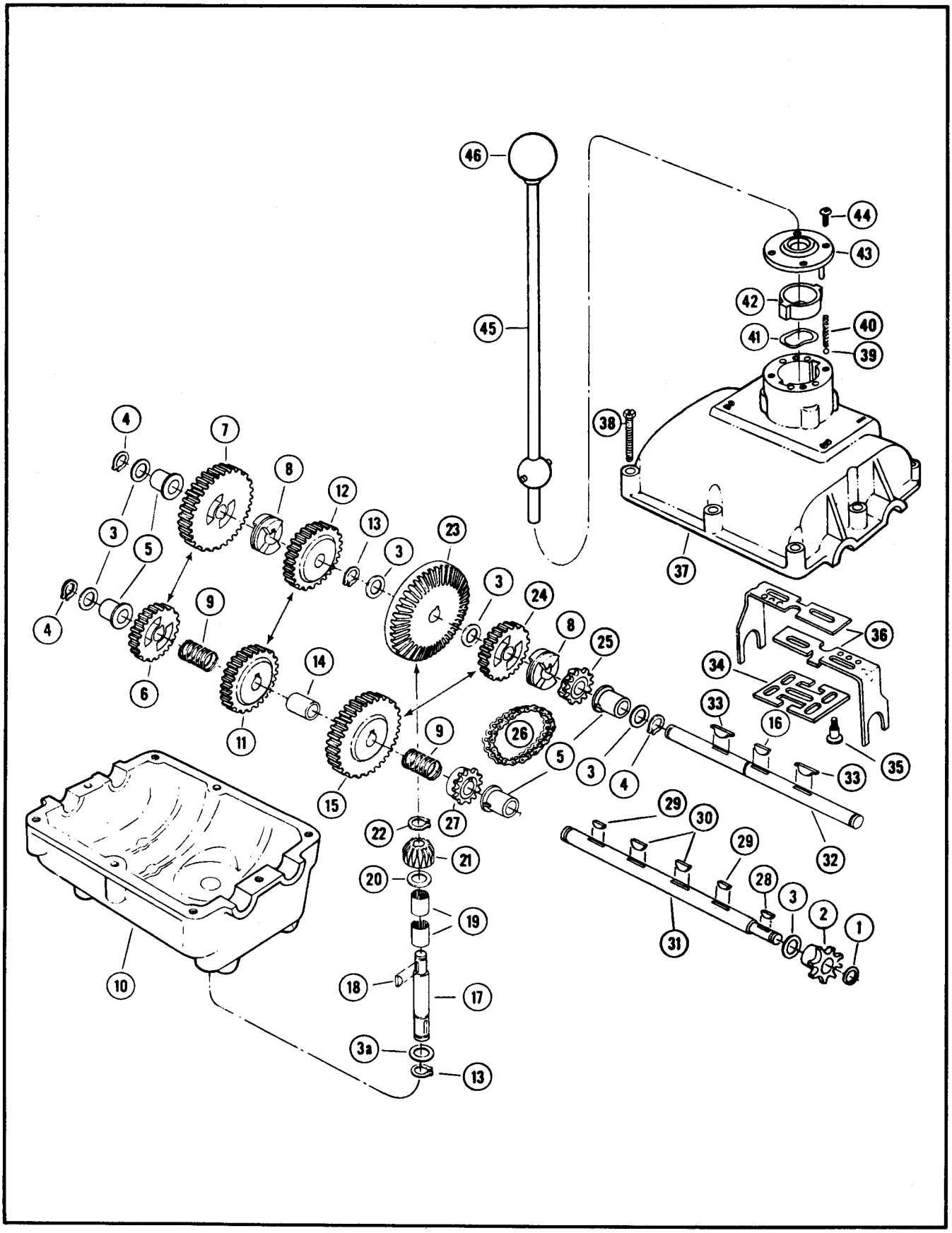

Figure 12. Transmission (Three-Speed)

Figure 12. Transmission (Three-Speed)

Ref. No.	Part No.	Description	Qty
1	32151-23 S	Retaining Ring (#5108-50)	1
2	2119-453 S	Sprocket	1
3 *	2119-454 S	Washer (.030")	*
3 *	2119-455 S	Washer (.040")	*
3 *	2119-456 S	Washer (.050")	*
3a	2119-457 S	Washer (.060")	1
4	32120-19	Retaining Ring	3
5	2119-458 S	Flange Bearing	4
6	2119-459 S	20-T Gear (with keyway)	1
7	2119-460 S	30-T Gear (without keyway)	1
8	2119-461 S	Clutch Collar	2
9	2119-462 S	Compression Spring	2
10	2119-463 S	Lower Housing	1
11	2119-464 S	Gear (with keyway)	1
12	2119-465 S	Gear (without keyway)	1
13	32120-64	Retaining Ring	2
14	2119-466 S	Spacer	1
15	2119-467 S	Gear (with keyway)	1
16	2119-468 S	Key	1
17	2119-469 S	Input Shaft	1
18	2119-470 S	Key	1
19	2119-471 S	Needle Bearing	2
20	2119-472 S	Thrust Washer	1
21	2119-473 S	Bevel Pinion	1
22	32120-3	Retaining Ring	1

*Use thickness required.

Ref. No.	Part No.	Description	Qty
23	2119-474 S	Bevel Gear	1
24	2119-475 S	Gear (without keyway)	1
25	2119-476 S	Sprocket (without keyway)	1
26	2119-477 S	Chain	1
27	2119-478 S	Sprocket (with keyway)	1
28	2119-479 S	Key	1
29	2119-480 S	Key	2
30	2119-481 S	Key	2
31	2119-482 S	Output Shaft	1
32	2119-483 S	Drive Shaft	1
33	2119-484 S	Key (special)	2
34	2119-485 S	Shifter Lock-Out Plate	1
35	2119-486 S	Shoulder Screw	4
36	2119-487 S	Shifter Fork	2
37	2119-488 S	Upper Housing	1
38	2119-489 S	Screw	8
39	2119-490 S	Detent Ball	2
40	2119-491 S	Detent Spring	2
41	2119-492 S	Wave Washer	1
42	2119-493 S	Nylon Insert	1
43	2119-494 S	Nylon Cover	1
44	32122-20	Screw	4
45	2119-495 S	Shifter Handle Assembly	1
46	2119-496 S	Shifter Knob	1

LUBRICATION CHART

LUBRICATION POINT	LUBRICANT TO USE	HOW OFTEN
1. Front Axle Spindles	Automotive Chassis Grease	20 hours
2. Rear Axle Bearing Support	Automotive Chassis Grease	20 hours
3. Brake Assembly	Automotive Engine Oil	20 hours
4. Front Wheels	Automotive Chassis Grease	20 hours
5. Gearshift Ball	Automotive Engine Oil	20 hours
6. Screw Height Adjustment at Threads & Washers	Automotive Engine Oil	20 hours
7. Idler Arm Assembly	Automotive Engine Oil	20 hours
8. Blade Height Adjustment both Sides at Slots	Automotive Engine Oil	20 hours
9. Steering Column Bearing	Automotive Engine Oil	20 hours
10. Drive Chain	Automotive Engine Oil	20 hours
11. Front Axle Bearing Support	Automotive Engine Oil	20 hours
12. Clutch Arm Swivel Points	Automotive Engine Oil	20 hours
13. Transmission Drive Belt Idler Pivots	Automotive Engine Oil	20 hours
14. Top Spindle Blade Shaft	Automotive Engine Oil	20 hours
15. Bottom End Steering Shaft	Automotive Engine Oil	20 hours

MEMO

MEMO

PRODUCT CHANGES

In an effort to make improvements available to Toro owners as quickly as possible, minor changes are incorporated into Toro's products from time to time that do not become immediately shown in the Reference Drawing and Parts List. If such a change apparently has been made in your unit, which is not reflected in your manual, see your Toro distributor or his authorized Toro service dealer for information and parts numbers.

IMPORTANT ORDERING INSTRUCTIONS

Repair parts are available from your TORO distributor. To insure getting correct parts without delay, please furnish the following information:

1. Serial number of your product as shown on the name plate.
2. Part number, description and quantity of each part required.
3. Name and address where parts are to be shipped.
4. Do NOT order by reference number, use part number only.

Warranty

The Manufacturer warrants each new piece of equipment sold to be free of defects in material and workmanship. For one year from the purchase date of consumer line equipment or 45 days if sold for commercial use, Toro Manufacturing Corporation will repair or replace for the original purchaser, free of charge, through any Authorized Service Dealer, any part or parts found at our factory in Minneapolis, Minnesota, to be defective under normal use and service. All institutional equipment is warranted for ninety (90) days from the purchase date.

This Warranty does not obligate the Manufacturer to bear the cost of transportation charges in connection with the replacement or repair of defective parts -- nor shall it apply to a machine upon which repairs or alterations have been made, unless authorized by the manufacturer.

This Warranty does not include nor cover standard accessories produced by other manufacturers. Such accessories have separate warranties by their respective manufacturers . . . and repair or exchange will be made on the basis of such warranties, and the policies authorized by them shall be adhered to.

This Warranty is in lieu of all other warranties expressed or implied.

SAFETY TIPS FOR RIDING LAWN MOWERS, GARDEN TRACTORS AND ATTACHMENTS

Improper use of riding lawn mowers, garden tractors and attachments on the part of the operator can result in injury. To reduce this possibility, give complete and undivided attention to the job at hand.

1. Know the controls and how to stop quickly — READ THE OWNER'S MANUAL.

2. Do not allow children to operate machine; nor adults to operate it without proper instruction.

3. Clear work area of objects which might be picked up and thrown.

4. Disengage all clutches and shift into neutral before starting motor. Keep hands, feet and clothing away from power driven parts.

5. Do not carry passengers. Keep children and pets a safe distance away.

6. Never direct discharge of any material toward bystanders nor allow anyone near machine while in operation.

7. Disengage power to any attachment and stop motor before leaving operator position.

8. Take precautions when leaving machine unattended (to avoid accidental starting, rolling away, accidental dropping of any attachment, etc.)

9. Disengage power to any attachment whenever it is not in use or when traveling from one work area to another.

10. Stay alert for holes and other hidden hazards.

11. Know what is behind you before backing up.

12. Beware of steep slopes, reduce speed on all side slopes and sharp turns to prevent tipping or losing control.

13. Don't stop or start suddenly when going uphill or downhill.

14. Do not drive close to a ditch or creek.

15. Do not attempt to operate the machine when you are not in the driver's seat.

16. Do not attempt to get off of the machine while it is moving.

17. Use extra care when pulling loads or using heavy equipment. (Refer to your owner's manual.)

18. Watch out for traffic when near roadways.

19. Handle gasoline with care — it is highly flammable.

   A. Use approved gasoline container.

   B. Never add gasoline to a running motor — fill tank out of doors and wipe up spilled gasoline.

   C. Replace gasoline cap securely.

   D. Open doors if motor is run in garage — exhaust gases are dangerous.

20. Keep machine in good operating condition and keep safety devices in place. Use guards as instructed in owner's manual.

21. Disengage power to any attachment and stop motor before making repairs or adjustments.

These safety suggestions are recommended by Outdoor Power Equipment Institute and Toro Mfg. Corp.

Outdoor Power Equipment Institute, Inc. SPONSORED

CONFORMS TO ASAE STANDARD