FORM NO. 3323-246

TORO®

48" Recycler® Kit

for Mid-Size Mowers

MODEL NO. 30143

INSTALLATION INSTRUCTIONS

Loose Parts

Note: Use the chart below to identify parts for assembly.

DESCRIPTION	QTY.	USE
Baffle left side	1	Install Recycler® baffles
Baffle right side	1	
Bolt 5/16-18 x 5/8" (16 mm)	3	
Carriage Bolt 5/16-18 x 3/4" (19 mm)	3	
Flange nut 5/16-18	6	
Baffle Stabilizer	1	
Cover plate	1	Cover discharge opening
Carriage bolt 5/16-18 x 3/4" (19mm)	2	
Flange nut 5/16-18	2	
Bolt 3/8-16 x 3/4" (19 mm)	3	
Flange nut 3/8-16	3	
Kicker	3	Install kickers
Bolt 5/16-18 x 5/8" (16 mm)	6	
Lock nut 5/16-18	6	
Recycler® blade	3	Replace standard blades on mower

PROTOTYPE

Preparing the Mower

1. Remove belt cover from top of mower.
2. Thoroughly clean underside of the mower. All debris must be removed to ensure that baffles and kickers will fit properly against the cutting chamber.
3. Tilt the mower up and support with jack stands to ease installation of kit.
4. Flip up discharge chute and remove the discharge baffle near discharge opening (Fig. 1).

   Note: Replace hardware in top of mower when baffle is removed for safety and to save for use when using mower to side discharge.

©The Toro Company - 1999
All Rights Reserved

Printed in USA

⚠ DANGER

POTENTIAL HAZARD

- **Open holes in the mower expose you and others to thrown debris.**

WHAT CAN HAPPEN

- **Debris thrown out of holes in the mower can cause injury.**

HOW TO AVOID THE HAZARD

- **Never operate the mower without hardware mounted in all holes in the mower.**
- **Install hardware in all open holes when the Recycler® kit is removed.**

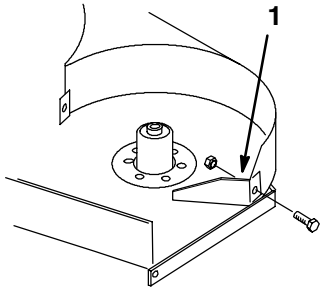

Figure 1

1. Discharge baffle

Installing the Baffles

Note: Figures 2 and 3 show deck turned over.

1. Remove the (4) 3/8"-16 x 3/4" (19 mm) carriage bolts and 3/8" locknuts from the holes where the baffles will be installed (Fig. 2).

Note: Save hardware for use when using mower to side discharge.

2. Place the left side baffle inside cutting chamber. Secure to the mower rear baffle with a 5/16-18 x 5/8" (16 mm) bolt and to the front baffle with (2) 5/16-18 x 3/4" (16 mm) bolts and (3) 5/16-18 flange nuts (Fig. 2).

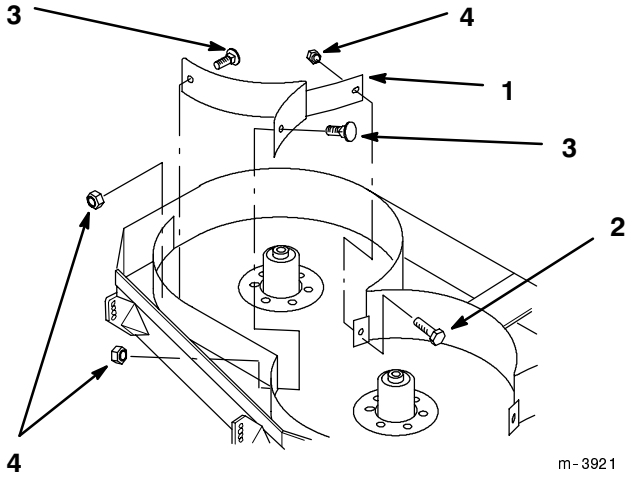

Figure 2

1. Baffle left side
2. Bolt 5/16-18 x 5/8" (16 mm)
3. Bolt 5/16-18 x 3/4" (19 mm)
4. flange nut 5/16-18

3. Place the right side baffle inside cutting chamber. Secure right side baffle to the mower rear baffle and top of mower. Use (2) 5/16-18 x 5/8" (16 mm) bolts (Fig. 3).

4. Place baffle stabilizer between front of deck and front baffle. Install a 5/16-18 x 3/4" (16 mm) carriage bolt and (3) 5/16-18 flange nuts (Fig. 3).

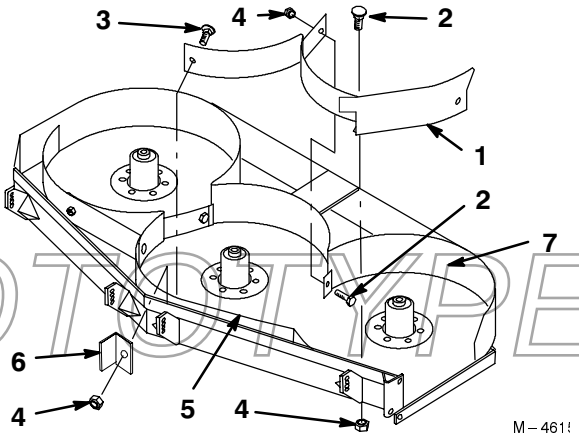

Figure 3

1. Baffle right side
2. Bolt 5/16-18 x 5/8" (16 mm)
3. Carriage bolt 5/16-18 x 5/8" (16 mm)
4. flange nut 5/16-18
5. Front Baffle
6. Baffle Stabilizer

PROTOTYPE

5. Place (3) 3/8-16 x 3/4” (19 mm) bolts, through from outside of discharge cover plate, at top and front edges. Secure bolts with (3) 3/8-16 flange nuts (Fig. 4).

6. Place (2) 5/16-18 x 3/4” (19 mm) carriage bolts through from outside of discharge cover plate at rear edge. One through rear of mower the other through right baffle. Secure carriage bolts with (2) 5/16-18 flange nuts (Fig. 4).

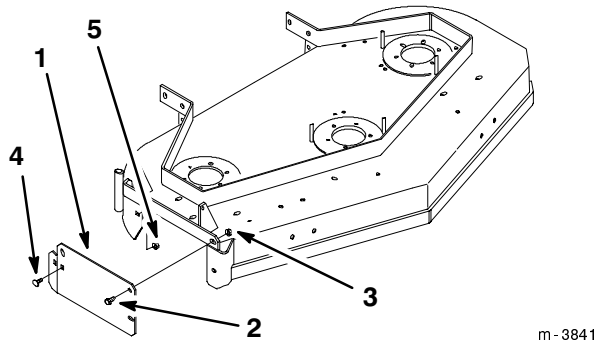

Figure 4

1. Discharge cover plate
2. Bolt 3/8-16 x 3/4” (19 mm)
3. Flange nut 3/8-16
4. Carriage bolt 5/16-18 x 3/4” (19 mm)
5. Flange nut 5/16-18

7. Tighten all mounting hardware securely.

Installing the Kickers

1. Measure from the spindle center lines, and locate kickers as shown (Fig. 5). Center and right spindles 2-3/4” (70 mm) off to the left and right spindle 1-3/16” (30.5 mm) off to the right (Fig. 5).

2. Holding kickers tight against baffle, mark, center punch and drill (2) 11/32” (9 mm) holes for each kicker (Fig. 5).

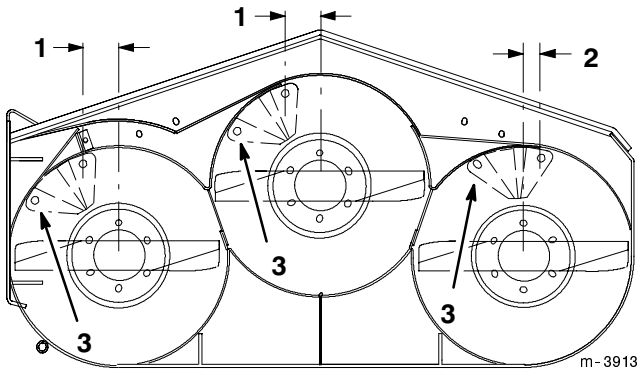

Figure 5

1. 2-3/4” (70 mm)
2. 1-3/16” (30.5 mm)
3. Mark, center punch and drill 11/32” (9 mm) holes

Place (3) kickers inside the mower over drilled holes. Secure each kicker with (2) 5/16-18 x 5/8” (16 mm) bolts, through from the bottom of the mower, and (2) 5/16-18 flange nuts (Fig. 6).

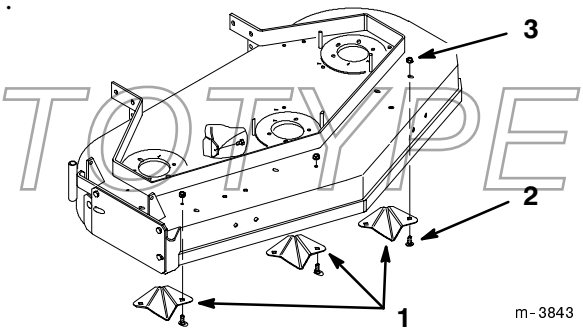

Figure 6

1. Kicker
2. Bolt 5/16-18 x 5/8” (16mm)
3. Flange nut 5/16-16

3. Tighten all mounting hardware securely.

PROTOTYPE

Installing the Recycler® Blades

1. Remove the standard blades (Fig. 7). Refer to Operator's Manual.
2. Place the blade onto the bolt, over cone washer. Select proper number of spacer(s) for height-of-cut and slide bolt into spindle (Fig. 7).

   IMPORTANT: The sail (curved part of the blade) must be pointing toward the inside of the mower to ensure proper cutting.
3. Install remaining spacer(s) for proper height-of-cut and secure with thin washer and nut (Fig. 7).
4. Torque the blade bolt to 75–80 ft. lb. (101–108 N•m).
5. Rotate the blades to ensure that there is at least 1/8" clearance between the blades and baffles.
6. Remove jack stands and lower mower.

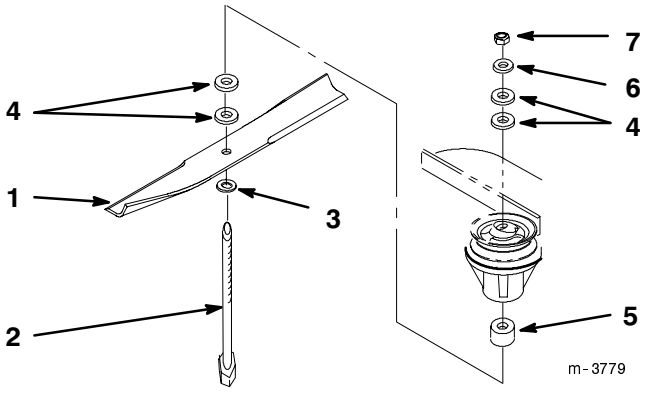

Figure 7

1. High-lift lade
2. Blade bolt
3. Cone washer
4. Spacer
5. Tube
6. Thin washer
7. Nut

Removing Baffles for Side Discharge Cutting

1. Thoroughly clean the mower.
2. Tilt the mower up and support with jack stands to ease removal of kit.
3. Remove the mounting hardware from the baffles, kickers and discharge cover plate.

   Note: Save the hardware for use when installing the Recycler® kit.

⚠ DANGER

POTENTIAL HAZARD
- **Open holes in the mower expose you and others to thrown debris.**

WHAT CAN HAPPEN
- **Debris thrown out of holes in the mower can cause injury.**

HOW TO AVOID THE HAZARD
- **Never operate the mower without hardware mounted in all holes in the mower.**
- **Install hardware in all open holes when the Recycler® kit is removed.**

4. Install previously removed discharge baffle
5. Install previously removed standard blades.
6. Remove jack stands and lower mower.

PROTOTYPE