Form No. 3397-151 Rev D

1500 Power Curve® Snowthrower

Model No. 38371—Serial No. 316000001 and Up

Operator's Manual

If, after carefully reading this manual, you still have questions or problems, call toll free 1-800-808-2963 (US) or 1-800-808-3072 (Canada) before returning this product.

IMPORTANT SAFETY INSTRUCTIONS

When using an electrical appliance, basic precautions should always be followed, including the following:

READ ALL INSTRUCTIONS BEFORE USING THIS APPLIANCE

WARNING—To reduce the risk of fire, electric shock, or injury, follow these safety instructions.

It is essential that you or any other operator of the appliance read and understand the contents of this manual before operating the appliance. Pay particular attention to the safety alert symbol ⚠ which means CAUTION, WARNING, or DANGER—personal safety instruction. Read and understand the instruction because it has to do with safety. **Failure to comply with these instructions may result in personal injury, risk of fire, or electrical shock.**

Double insulation—If the appliance cord is damaged in any manner while it is plugged in, disconnect the extension cord from the wall receptacle first. The power cord and switch used on this appliance cannot be replaced, and the equipment shall be disposed of.

Do not use the appliance on a graveled surface.

Keep children and bystanders away—All visitors should be kept at a distance from the work area.

Dress properly—Do not wear loose clothing or jewelry. They can be caught in moving parts.

Wear rubber boots when operating the appliance.

Operating the appliance in the hand-held position is unsafe.

Warning—To prevent electric shock, use the appliance only with an extension cord suitable for outdoor use.

Extension cords—To prevent the appliance cord and the extension cord from disconnecting during operation, connect the extension cord to the appliance as shown in Figure 4.

Avoid accidental starting—Do not carry the appliance with your finger on the switch. Ensure that the switch is off when plugging in the appliance.

Do not abuse the cord—Never carry the appliance by its cord or yank on the extension cord to disconnect the appliance from the receptacle. Keep the cord from heat, oil, and sharp edges.

Keep hands away from moving parts.

Keep guards in place and in working order.

Do not force the appliance—It will perform better and safer at the rate for which it was designed.

Do not overreach—Watch your footing and keep your balance at all times.

If the appliance strikes a foreign object, follow these steps:

- Immediately release the control bar to stop the appliance.
- Unplug the power cord.
- Inspect for damage.
- Repair any damage before starting and operating the appliance.

Disconnect the appliance—Disconnect the appliance from the power supply when not in use, before servicing, when changing accessories, etc.

Store an idle appliance indoors. When the appliance is not in use, it should be stored indoors in a dry, secured place out of the reach of children.

Maintain the appliance with care—Follow instructions for changing accessories.

This appliance meets or exceeds the B71.3 specifications of the American National Standards Institute in effect at the time of production.

Read and understand the contents of this manual before you start the motor.

⚠This is the safety alert symbol. It is used to alert you to potential personal injury hazards. Obey all safety messages that follow this symbol to avoid possible injury or death.

Improperly using or maintaining this appliance could result in injury or death. To reduce this potential, comply with the following safety instructions.

This appliance is capable of amputating hands and feet and of throwing objects. Failure to observe the following safety instructions could result in serious injury.

Training

- Read, understand, and follow all instructions on the appliance and in the manual(s) before operating this appliance. Be thoroughly familiar with all the controls and the proper use of the appliance. Know how to stop the appliance and disengage the controls quickly.

© 2019—The Toro® Company
8111 Lyndale Avenue South
Bloomington, MN 55420

Register at www.Toro.com.

Original Instructions (EN)
Printed in the Mexico
All Rights Reserved

3397-151 b

- Never allow children to operate the appliance. Never allow adults to operate the appliance without proper instruction.
- Keep the area of operation clear of all persons, particularly small children.
- Exercise caution to avoid slipping or falling.

Preparation

- Thoroughly inspect the area where the appliance is to be used and remove all doormats, sleds, boards, wires, and other foreign objects.
- Do not operate the appliance without wearing adequate winter garments. Avoid loose fitting clothing that can get caught in moving parts. Wear footwear that will improve footing on slippery surfaces.
- Do not attempt to clear snow from a gravel or crushed rock surface. This appliance is intended for use only on paved surfaces.
- Never attempt to make any adjustments while the motor is running (except when specifically recommended by manufacturer).
- Always wear safety glasses or eye shields during operation or while performing an adjustment or repair to protect eyes from foreign objects that may be thrown from the appliance.

Operation

- Do not put hands or feet near or under rotating parts. Keep clear of the discharge opening at all times.
- Exercise extreme caution when operating on or crossing gravel drives, walks, or roads. Stay alert for hidden hazards or traffic.
- After striking a foreign object, stop the motor, unplug the extension cord, remove the interlock button (key), and thoroughly inspect the appliance for any damage. Repair any damage before starting and operating the appliance.
- If the appliance should start to vibrate abnormally, stop the motor and check immediately for the cause. Vibration is generally a warning of trouble.
- Stop the motor, remove the interlock button (key), and unplug the appliance whenever you leave the operating position, before unclogging the rotor blade housing or discharge chute, and when making any repairs, adjustments, or inspections.
- When cleaning, repairing, or inspecting the appliance, stop the motor, remove the interlock button (key), unplug the appliance, and ensure that the rotor blades and all moving parts have stopped.
- Exercise extreme caution when operating on slopes.
- Never operate the appliance without proper guards and other safety protective devices in place and working.
- Never direct the discharge toward people or areas where property damage can occur. Keep children and others away.
- Do not overload the capacity of the appliance by attempting to clear snow at too fast a rate.
- Look behind and use care when backing up with the appliance.
- Never operate the appliance without good visibility or light. Always be sure of your footing, and keep a firm hold on the handle. Walk; never run.

Clearing a Clogged Discharge Chute

Hand contact with the rotating rotor blades inside the discharge chute is the most common cause of injury associated with snowthrowers. Never use your hand to clean out the discharge chute.

To clear the chute:

- **Shut the motor off, remove the interlock button (key), and unplug the extension cord from the machine!**
- Wait 10 seconds to be sure the rotor blades have stopped rotating.
- Always use a clean-out tool, not your hands.

Maintenance and Storage

- Check all fasteners at frequent intervals for proper tightness to ensure that the appliance is in safe working condition.
- Always refer to this *Operator's Manual* for important details if the appliance is to be stored for an extended period.
- Maintain or replace safety and instruction labels as needed.
- Run the appliance for a few minutes after throwing snow to prevent freeze-up of the rotor blades.

SAVE THESE INSTRUCTIONS

Safety and Instructional Decals



Safety decals and instructions are easily visible to the operator and are located near any area of potential danger. Replace any decal that is damaged or missing.



decal114-9034

114-9034

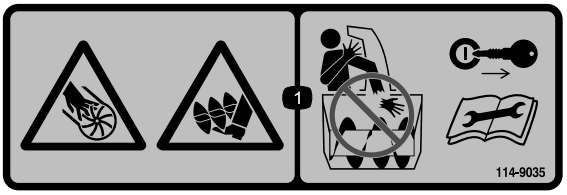

decal114-9035

114-9035

1. Cutting/dismemberment hazards of hand or foot, rotor—do not place your hand in the chute; remove the interlock button (key) and read the instructions before servicing or performing maintenance.

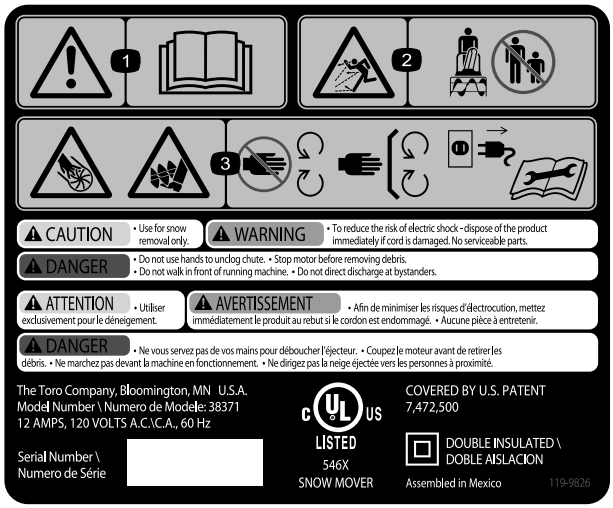

decal119-9825

119-9825

1. Warning—read the *Operator's Manual*.
2. Thrown object hazard—keep bystanders away.
3. Cutting/dismemberment hazard of hand, impeller; cutting/entanglement hazard of foot, auger—stay away from moving parts; keep all guards and shields in place; disconnect the machine from the power source and read the *Operator's Manual* before performing maintenance.

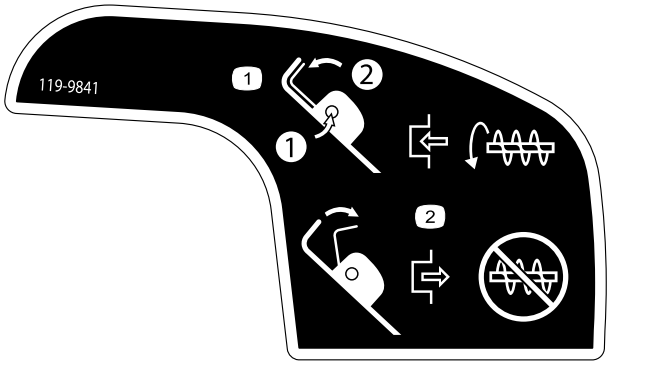

decal119-9841

119-9841

1. 1) Push the interlock button (key); 2) Hold the handle to engage the rotation of the rotor blade.
2. Release the handle to disengage the rotation of the rotor blades.

Setup

Note: Determine the left and right sides of the appliance from the normal operating position.

Installing the Upper Handle

1. Remove the handle knobs, oval bolts, and curved washers from the lower handle (Figure 1).

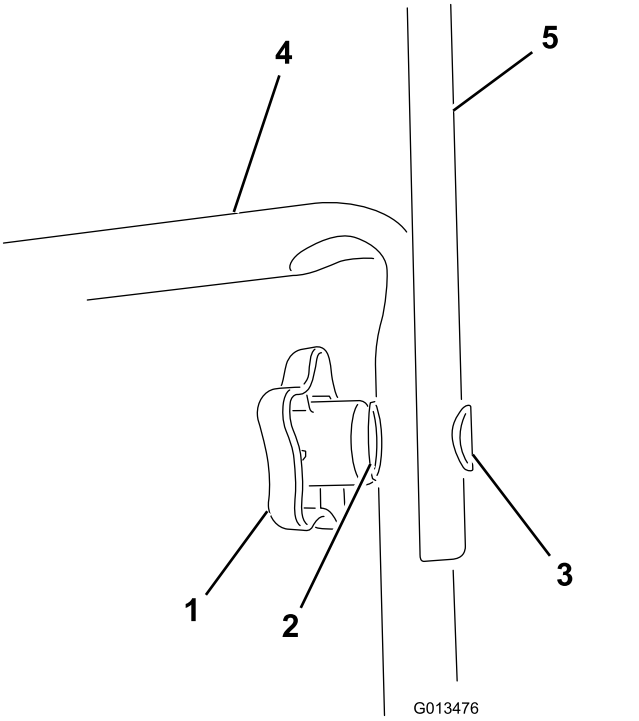

Figure 1

1. Handle knob (2)
2. Curved washer (2)
3. Oval bolt (2)
4. Lower handle
5. Upper handle

2. Install the upper handle to the lower handle of the appliance with the handle knobs, curved washers, and oval bolts as shown in Figure 1.

   Note: Ensure that the power cord attached to the appliance is routed over the lower handle and to the **inside** of the handle assembly.

3. Tighten the handle knobs firmly by hand.
4. Attach the cord guide to the handle (Figure 2).

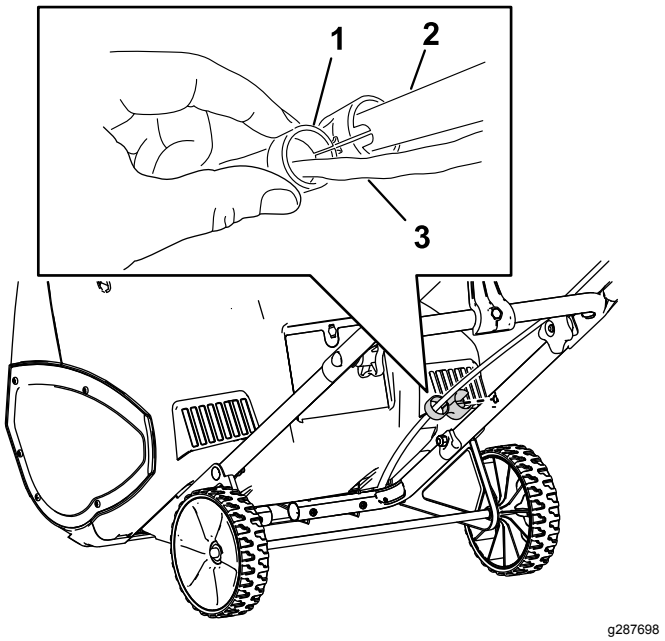

Figure 2

1. Cord guide
2. Handle
3. Cord

Operation

Product Overview

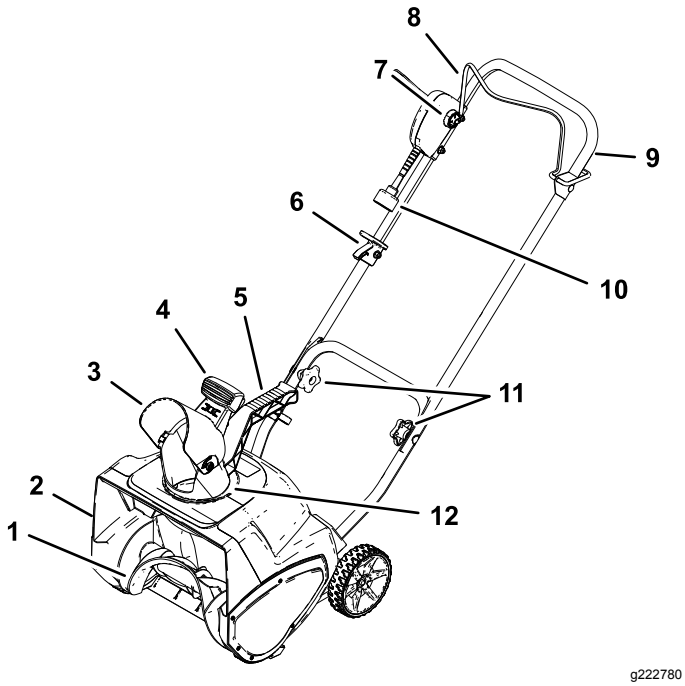

g222780

Figure 3

1. Rotor blades
2. Belt cover (not shown)
3. Chute deflector
4. Chute-deflector trigger
5. Discharge-chute handle
6. Cord lock
7. Interlock button (key)
8. Power-control bar
9. Upper handle
10. Cord
11. Handle knobs
12. Discharge chute

Important: **This appliance is intended for outdoor, residential use only. Do not use it indoors or for commercial or industrial purposes.**

Connecting to a Power Source

To reduce the risk of electric shock, this appliance has a polarized plug (i.e., one blade is wider than the other). Use only a polarized plug, UL-listed (CSA certified in Canada) extension cord recommended for outdoor use. A polarized plug will fit in a polarized cord only one way. If the plug does not fit fully in the cord, reverse the cord. If it still does not fit, purchase a polarized extension cord. If you have a polarized extension cord and the extension cord plug does not fit fully into the wall receptacle, reverse the plug. If it still does not fit, contact a qualified electrician to install the proper outlet. Do not change the appliance or extension cord plug in any way.

⚠ DANGER

Contact with water while operating the machine could cause electric shock, causing injury or death.

- **Do not handle the plug or the machine with wet hands or while standing in water.**
- **Use only an extension cord recommended for outdoor cold-weather use.**

Extension Cord Length	Minimum Wire Gauge (A.W.G.)
7.6 m (25 ft)	16
15.2 (50 ft)	16
30.5 (100 ft)	14
45.7 (150 ft)	10

Note: Do not use an extension cord over 46 meters (150 feet).

Important: **Check the extension cord frequently during use for holes or cracks in the insulation. Do not use a damaged cord. Do not run the cord through standing water.**

Note: To prevent the extension cord from disconnecting during operation, use the cord lock on the upper handle before you connect it to the machine (Figure 4).

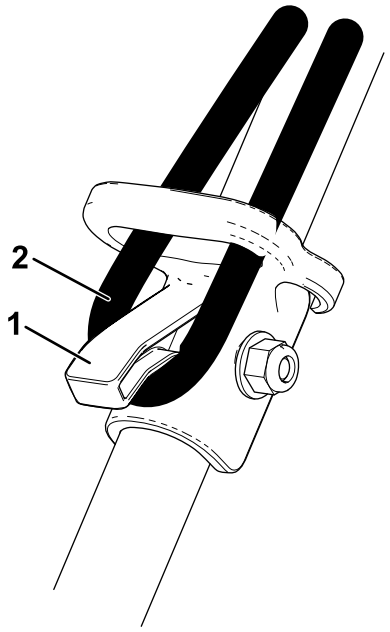

g220754

Figure 4

1. Cord lock
2. Extension cord

⚠ WARNING

The electrical cord can get damaged, causing a shock or fire.

Thoroughly inspect the electrical cord before using the snowthrower. If the cord is damaged, do not operate the snowthrower. Repair or replace the damaged cord immediately. Contact an Authorized Service Dealer for assistance.

Starting and Stopping the Motor

1. To start the motor, insert the interlock button (key), press and hold the interlock button (key), and squeeze the power control bar to the handle (Figure 5).

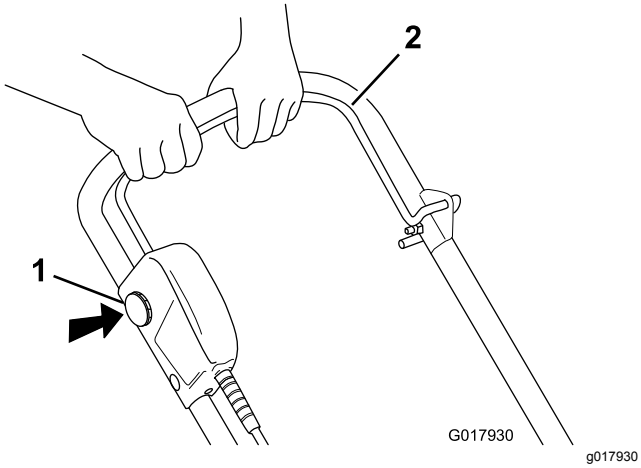

Figure 5

1. Interlock button (key)
2. Power control bar

Note: You may release the interlock button (key) after you squeeze and hold the power control bar to the handle.

2. To stop the motor, release the power control bar.

Note: When you stop the machine after you have finished removing the snow, also remove the interlock button (key) and disconnect the extension cord.

Adjusting the Discharge Chute and Chute Deflector

To adjust the direction of the snow stream from the discharge chute, move the handle on the discharge chute (Figure 6).

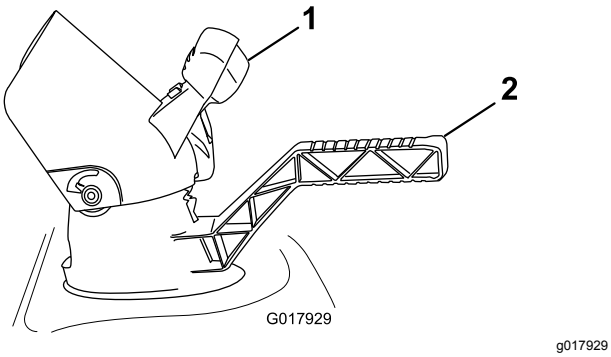

Figure 6

1. Discharge chute deflector trigger
2. Discharge chute handle

To adjust the height of the snow stream from the discharge chute, squeeze the trigger and raise or lower the discharge chute deflector (Figure 6).

⚠ WARNING

A gap between the discharge chute and the chute deflector may allow the machine to throw snow and objects toward you or bystanders. Thrown objects could cause serious personal injury.

- **Do not force the chute deflector too far forward so that a gap appears between the discharge chute and chute deflector.**
- **Do not adjust the chute deflector with the power control bar engaged. Release the power control bar before adjusting the chute deflector.**

Operating Tips

⚠ WARNING

If the appliance hits an object while in operation, the object could be thrown at you or bystanders. Thrown objects could cause serious personal injury.

Keep the area to be cleared free of all objects which may be picked up and thrown by the rotor blades.

- Check the condition of the appliance before operating it to ensure that the rotor turns freely.
- Always keep children and pets away from the area of operation.
- Keep the area to be cleared free of stones, toys, or other objects which the rotor blades can throw. Such items could be covered by snowfall and go unnoticed. If the appliance strikes an object during operation, stop the appliance, unplug the extension cord, remove the obstruction, and check the appliance for damage.
- Begin removing snow near the electrical outlet and work outward. Blow back and forth, not away from and toward the outlet.
- When turning at the end of a swath, step over the cord and turn the appliance.
- Always overlap each swath and discharge the snow downwind when possible.

⚠ WARNING

When using the discharge chute handle, never direct the snow discharge chute at the operator or bystanders. The appliance can throw objects and cause serious personal injury.

When using the discharge chute handle, always turn the discharge chute in the opposite direction from where you or bystanders are standing.

- Keep the extension cord clear of obstructions, sharp objects, and all moving parts. Do not pull sharply on cord or abuse it in any manner. Inspect the extension cord frequently for damage that may result in an electric shock. If the extension cord is damaged, replace it.
- In cold and snowy weather conditions, some controls and moving parts may freeze. Therefore, if any control becomes

difficult to operate, stop the motor, disconnect the extension cord, and check for frozen parts. Do not use excessive force when trying to operate frozen controls. Bring the appliance indoors to thaw frozen controls before operating it.

- When operating the appliance, keep the wheels 2.5 cm (1 inch) off the pavement by tipping the appliance forward. This helps prevent the snow from building up on the wheels.
- After clearing the snow, let the motor run for a few minutes so that moving parts do not freeze. Then shut off the motor, wait for all moving parts to stop, and wipe the ice and snow off the appliance. Rotate the chute crank several times to remove any snow.

Maintenance

Note: Determine the left and right sides of the appliance from the normal operating position.

⚠ WARNING

If the extension cord is plugged into the appliance, someone could accidentally operate the appliance while you are performing maintenance on it, causing serious personal injury.

Remove the interlock button (key) and disconnect the extension cord before you perform any maintenance on the appliance.

Lubricating the Appliance

You do not need to lubricate the appliance; all the bearings have been lubricated at the factory for the life of the appliance.

Replacing the Scraper

The scraper is located at the bottom of the rotor housing as shown in Figure 7.

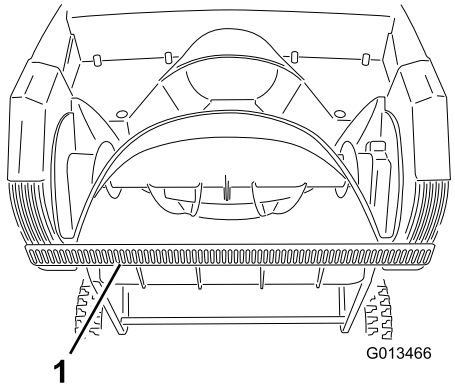

g013466

Figure 7

1. Scraper

1. Remove the screw from each side plate that holds the scraper (Figure 8) and 2 screws from under the appliance (Figure 9) that secure the scraper to the appliance.

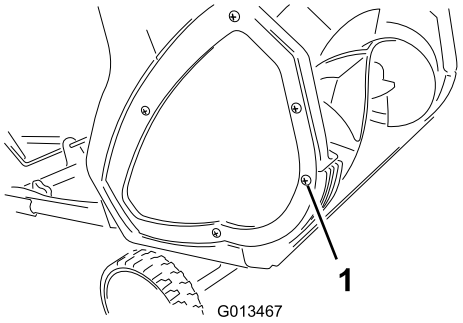

g013467

Figure 8

1. Screw (2)

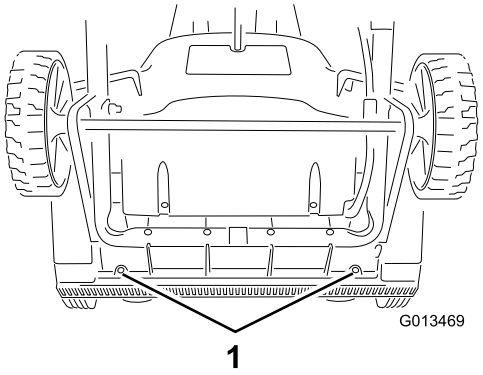

g013469

Figure 9

1. Screws

2. Remove and discard the old scraper.
3. Install the new scraper, and fasten it securely with the 4 screws that you previously removed.

Replacing the Rotor

1. Remove the screws that secure the right side plate to the appliance frame (Figure 10).

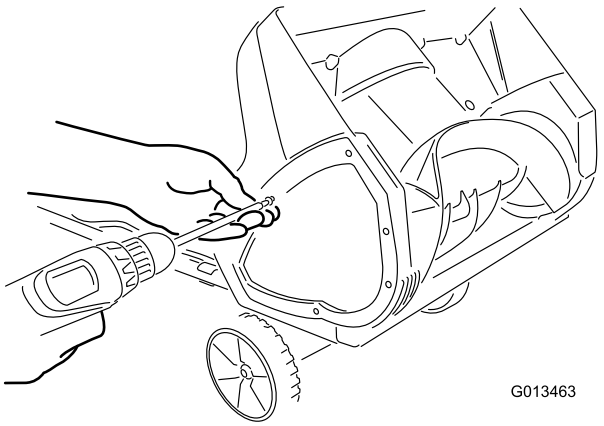

g013463

Figure 10

2. Remove the rotor pin (Figure 11).

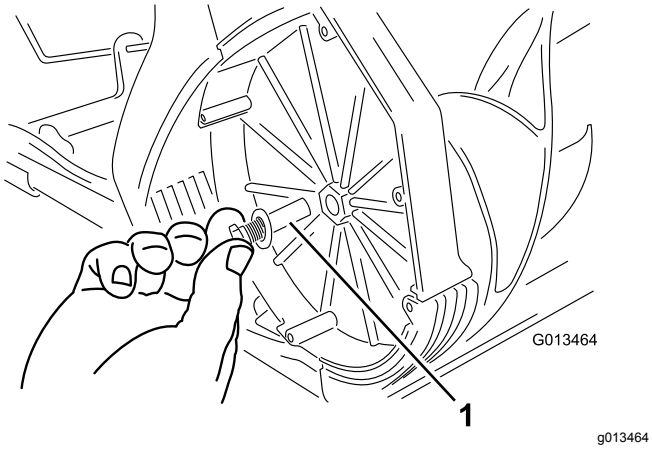

Figure 11

1. Rotor pin

3. Remove the old rotor.
4. Install the new rotor by inserting the end of the rotor onto the fitted end in the housing and rotating the rotor until it snaps into place (Figure 12).

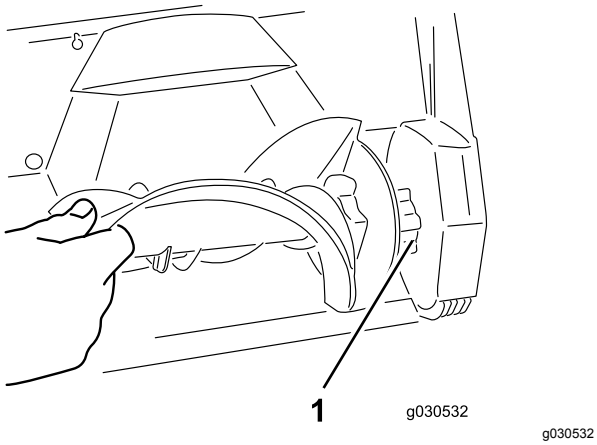

Figure 12

1. Fitted end of the rotor

Note: Ensure that the nut that secures the rotor pin remains inside the recessed hole in the right inside wall of the housing.

Note: The housing will flex when you install the rotor.

5. Tighten the bolt on the side of the housing.
6. Install the right side plate with the screws that you removed in step 1.

Service

Toro has designed this appliance to give you years of trouble-free use. Should it need service, bring the appliance to an Authorized Toro Service Dealer, who is specially trained to repair Toro products and will ensure that your Toro stays “all” Toro.

Double-insulated Appliances

In a double-insulated appliance, two systems of insulation are provided instead of grounding. No grounding means is provided on a double-insulated appliance, nor should a means for grounding be added to the appliance. Servicing a double-insulated appliance requires extreme care and knowledge of the system, and should be done only by the qualified service personnel at an Authorized Toro Service Dealer. Replacement parts for a double-insulated appliance must be identical to the parts they replace. A double-insulated appliance is marked with the words “Double Insulation” or “Double Insulated.” The symbol (square within a square) ⧈ may also be marked on the appliance.

Product Information

A model and serial number decal is located on the housing. Always refer to specific numbers on the decal in correspondence or when you need replacement parts.

Storage

1. Run the appliance for a few minutes and wipe away any melted snow on the appliance.
2. Remove the interlock button (key) and disconnect the extension cord from the appliance.
3. Examine the extension cord thoroughly for signs of wear or damage. Replace it if it is worn or damaged.
4. Examine the appliance thoroughly for worn, loose, or damaged parts. To repair or replace parts, contact an Authorized Service Dealer for assistance.
5. Store the extension cord with the appliance.
6. Store the appliance in a clean, dry place.