Form No. 3378-486 Rev C

1800 Power Curve® Snowthrower

Model No. 38302—Serial No. 314000001 and Up

Operator's Manual

If, after carefully reading this manual, you still have questions or problems, call toll free 1-800-808-2963 (US) or 1-800-808-3072 (Canada) before returning this product.

IMPORTANT SAFETY INSTRUCTIONS

When using an electrical appliance, basic precautions should always be followed, including the following:

READ ALL INSTRUCTIONS BEFORE USING THIS APPLIANCE

WARNING—To reduce the risk of fire, electric shock, or injury, follow these safety instructions.

It is essential that you or any other operator of the appliance read and understand the contents of this manual before operating the appliance. Pay particular attention to the safety alert symbol ⚠ which means CAUTION, WARNING, or DANGER—personal safety instruction. Read and understand the instruction because it has to do with safety. **Failure to comply with these instructions may result in personal injury, risk of fire, or electrical shock.**

Do not use the appliance on graveled surface.

Keep children, pets, and bystanders away—All visitors should be kept at a distance from the work area.

Dress properly—Do not wear loose clothing or jewelry. They can be caught in moving parts.

Wear rubber boots when operating the appliance.

Operating the appliance in the hand-held position is unsafe.

Warning—To prevent electric shock, use the appliance only with an extension cord suitable for outdoor use.

Extension cords—To prevent the appliance cord and the extension cord from disconnecting during operation, connect the extension cord to the appliance as shown in Figure 9.

Avoid accidental starting—Do not carry the appliance with your finger on the switch. Ensure that the switch is off when plugging in the appliance.

Do not abuse the cord—Never carry the appliance by its cord or yank on the extension cord to disconnect the appliance from the receptacle. Keep the cord from heat, oil, and sharp edges.

Keep hands away from moving parts.

Keep guards in place and in working order.

Do not force the appliance—It will perform better and safer at the rate for which it was designed.

Do not overreach—Watch your footing and keep your balance at all times.

If the appliance strikes a foreign object, follow these steps:

- Immediately release the control bar to stop the appliance.
- Unplug the power cord.
- Inspect for damage.
- Repair any damage before starting and operating the appliance.

Disconnect the appliance—Disconnect the appliance from the power supply when not in use, before servicing, when changing accessories, etc.

Store an idle appliance indoors. When the appliance is not in use, it should be stored indoors in a dry, secured place out of the reach of children.

Maintain the appliance with care—Follow instructions for changing accessories.

This appliance meets or exceeds the B71.3 specifications of the American National Standards Institute in effect at the time of production.

Read and understand the contents of this manual before you start the motor.

⚠This is the safety alert symbol. It is used to alert you to potential personal injury hazards. Obey all safety messages that follow this symbol to avoid possible injury or death.

Improperly using or maintaining this appliance could result in injury or death. To reduce this potential, comply with the following safety instructions.

This appliance is capable of amputating hands and feet and of throwing objects. Failure to observe the following safety instructions could result in serious injury.

Training

- Read, understand, and follow all instructions on the appliance and in the manual(s) before operating this appliance. Be thoroughly familiar with all the controls and the proper use of the appliance. Know how to stop the appliance and disengage the controls quickly.
- Never allow children to operate the appliance. Never allow adults to operate the appliance without proper instruction.
- Keep the area of operation clear of all persons, particularly small children and pets.
- Exercise caution to avoid slipping or falling when operating on slippery surfaces and at high speeds.

© 2019—The Toro® Company
8111 Lyndale Avenue South
Bloomington, MN 55420

Register at www.Toro.com.

CE

Original Instructions (EN)
Printed in the USA
All Rights Reserved

3378-486 C

Preparation

- Thoroughly inspect the area where the appliance is to be used and remove all doormats, sleds, boards, wires, and other foreign objects.
- Do not operate the appliance without wearing adequate winter garments. Avoid loose fitting clothing that can get caught in moving parts. Wear footwear that will improve footing on slippery surfaces.
- Do not attempt to clear snow from a gravel or crushed rock surface. This appliance is intended for use only on paved surfaces.
- Never attempt to make any adjustments while the motor is running (except when specifically recommended by manufacturer).
- Always wear safety glasses or eye shields during operation or while performing an adjustment or repair to protect eyes from foreign objects that may be thrown from the appliance.

Operation

- Do not put hands or feet near or under rotating parts. Keep clear of the discharge opening at all times.
- Exercise extreme caution when operating on or crossing gravel drives, walks, or roads. Stay alert for hidden hazards or traffic.
- After striking a foreign object, stop the motor, unplug the extension cord, remove the key, and thoroughly inspect the appliance for any damage. Repair any damage before starting and operating the appliance.
- If the appliance should start to vibrate abnormally, stop the motor and check immediately for the cause. Vibration is generally a warning of trouble.
- Stop the motor, remove the key, and unplug the appliance whenever you leave the operating position, before unclogging the rotor blade housing or discharge chute, and when making any repairs, adjustments, inspections, and while transporting the machine.
- Do not direct the snow discharge at any bystanders.
- Do not operate with anyone standing in front of the machine.
- When cleaning, repairing, or inspecting the appliance, stop the motor, remove the key, unplug the appliance, and ensure that the rotor blades and all moving parts have stopped.
- Exercise extreme caution when operating on slopes.
- Do not operate the machine at high transport speed on slippery surfaces.
- Use care when reversing the machine.
- Never operate the appliance without proper guards and other safety protective devices in place and working.
- Never direct the discharge toward people or areas where property damage can occur. Keep children and others away.
- Do not overload the capacity of the appliance by attempting to clear snow at too fast a rate.
- Look behind and use care when backing up with the appliance.
- Never operate the appliance without good visibility or light. Always be sure of your footing, and keep a firm hold on the handle. Walk; never run.
- Disengage power to the impeller when the machine is being transported or not in use.
- Use only Toro-approved attachments and accessories.

Clearing a Clogged Discharge Chute

Hand contact with the rotating rotor blades inside the discharge chute is the most common cause of injury associated with snowthrowers. Never use your hand to clean out the discharge chute.

To clear the chute:

- **Shut the motor off, remove the key, and unplug the extension cord from the machine!**
- Wait 10 seconds to be sure the rotor blades have stopped rotating.
- Always use a clean-out tool, not your hands.

Maintenance and Storage

- Before each use check all fasteners for proper tightness to ensure that the appliance is in safe working condition.
- Always refer to the *Operator's Manual* for important details if the appliance is to be stored for an extended period.
- Maintain or replace safety and instruction labels as needed.
- Run the appliance for a few minutes after throwing snow to prevent freeze-up of the rotor blades.

SAVE THESE INSTRUCTIONS

Sound Pressure

This unit has a maximum sound pressure level at the operator's ear of 83 dBA, based on measurements of identical machines per EN 11201.

Sound Power

This unit has a guaranteed sound power level of 98 dBA, based on measurements of identical machines per EN 3744.

Vibration

This unit does not exceed a hand/arm vibration level of 1.2 m/s^2, based on measurements of identical machines per EN 1033.

Safety and Instructional Decals

Safety decals and instructions are easily visible to the operator and are located near any area of potential danger. Replace any decal that is damaged or missing.

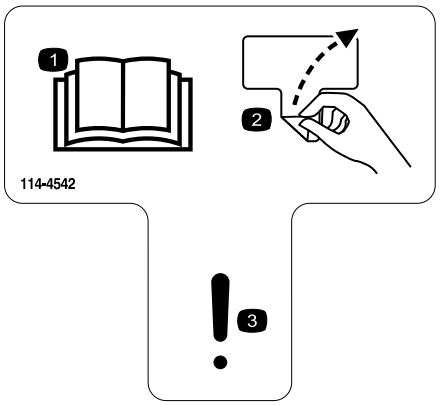

decal114-4542

114-4542

1. Read the *Operator's Manual*.
2. Remove decal
3. Warning



decal114-9034

114-9034

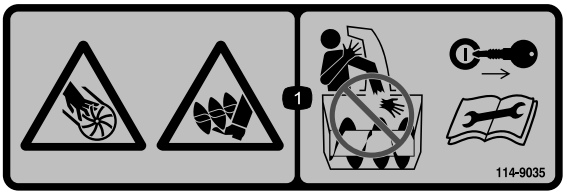

decal114-9035

114-9035

1. Cutting/dismemberment hazard of hand or foot, auger—do not place your hand in the chute; remove the ignition key and read the instructions before servicing or performing maintenance.

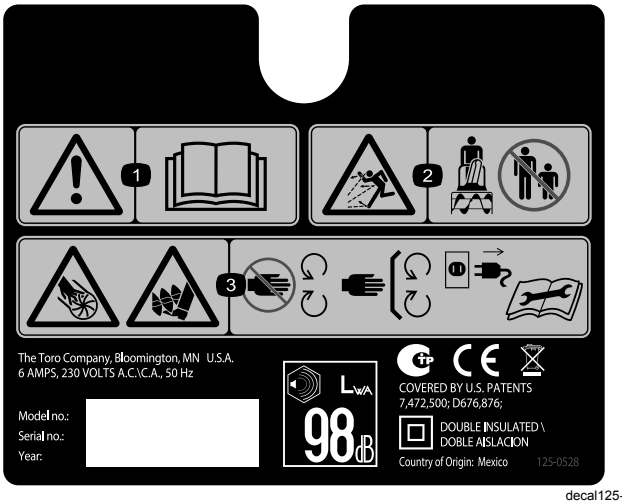

decal125-0528

125-0528

1. Warning—read the *Operator's Manual*.
2. Thrown object hazard—keep bystanders away.
3. Cutting/dismemberment hazard of hand; cutting/dismemberment hazard of foot, auger—stay away from moving parts; keep all guards and shields in place; disconnect the power cord from the power source and read the *Operator's Manual* before performing maintenance.

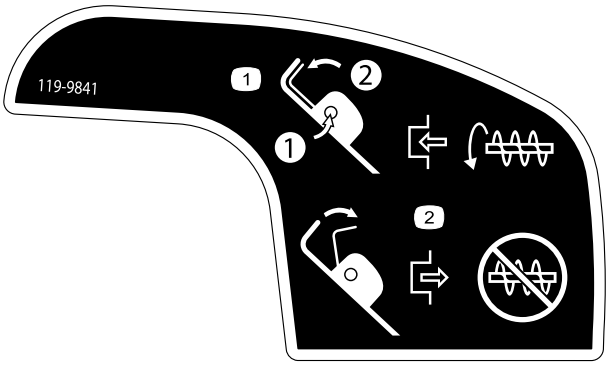

decal119-9841

119-9841

1. 1) Push the interlock switch; 2) Hold the handle to engage the rotation of the auger blade.
2. Release the handle to disengage the rotation of the auger blade.

Setup

Note: Determine the left and right sides of the machine from the normal operating position.

Installing the Upper Handle

1. Remove the handle knobs, oval bolts, and curved washers from the lower handle.
2. Install the upper handle to the lower handle of the machine with the handle knobs, curved washers, and oval bolts as shown in Figure 1.

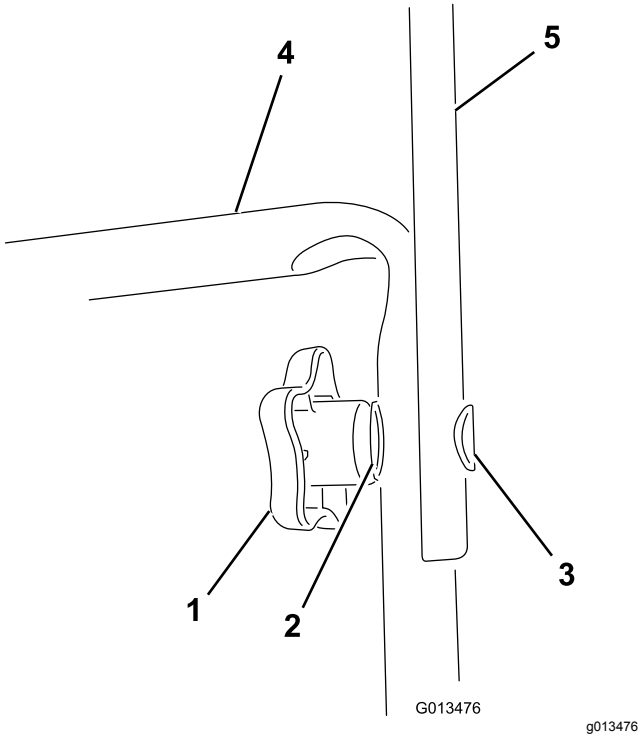

Figure 1

1. Handle knob (2)
2. Curved washer (2)
3. Oval bolt (2)
4. Lower handle
5. Upper handle

Note: Ensure that the power cord attached to the machine is routed over the lower handle and to the **inside** of the handle assembly.

3. Tighten the handle knobs firmly by hand.
4. Attach the cord guide to the handle (Figure 2).

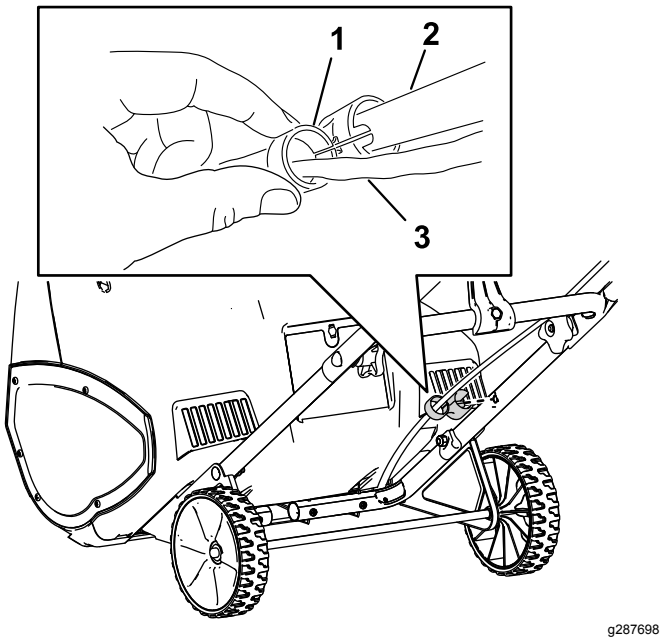

Figure 2

1. Cord guide
2. Handle
3. Cord

Installing the Chute Control Rod

1. Position the discharge chute so that it faces forward.

   Important: **Align the arrow on the discharge chute with the arrow on the housing (Figure 3).**

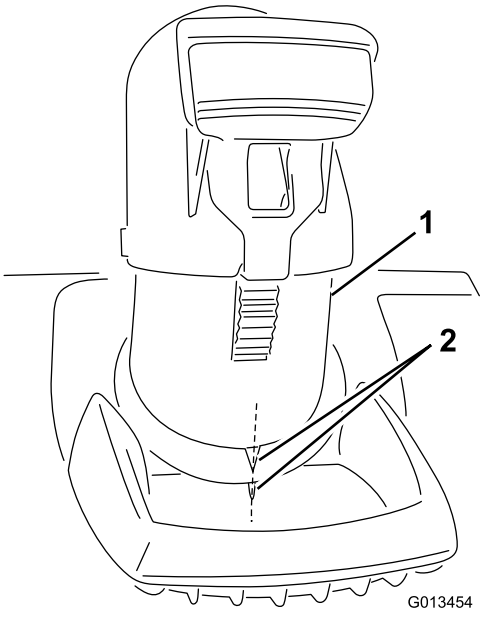

Figure 3

1. Discharge chute
2. Align the arrows

2. Insert the end of the chute control rod through the keyed hole in the bracket that is attached to the top of the lower handle (Figure 4).

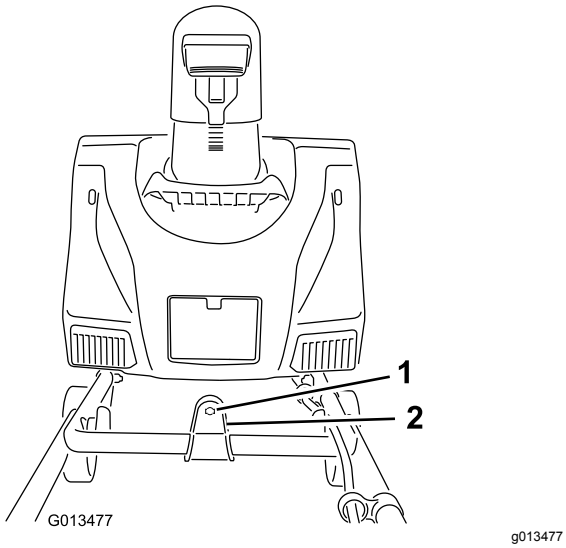

g013477

Figure 4

1. Keyed hole
2. Bracket

3. Remove the decal that covers the keyed hole in the back of the housing (Figure 5).

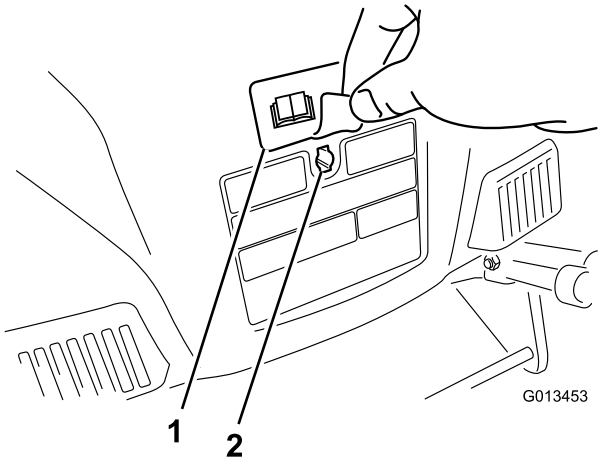

g013453

Figure 5

1. Decal
2. Keyed hole

4. Ensure that the handle of the chute control rod points upward (Figure 6), and insert the rod into the keyed hole in the back of the housing.

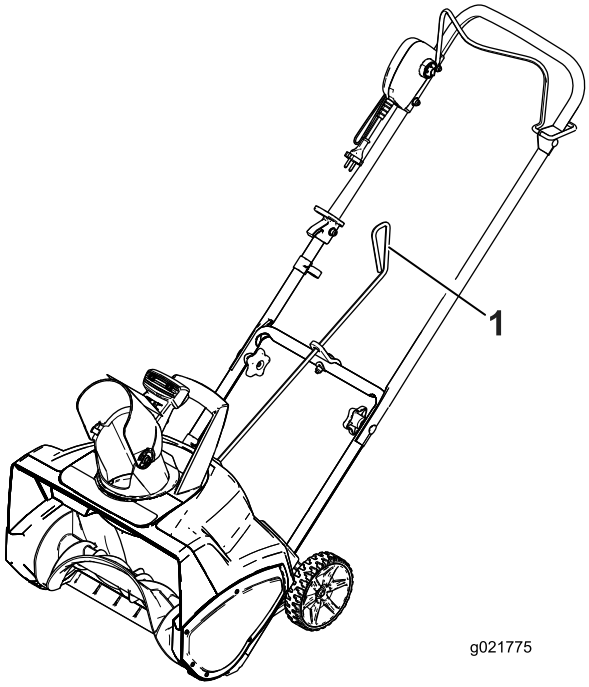

g021775

Figure 6

1. Handle on the chute control rod

5. Firmly push the rod into the keyed hole in the back of the housing until it snaps into place.
6. Move the handle on the chute control rod to ensure that it moves in the same direction as the chute (Figure 7).

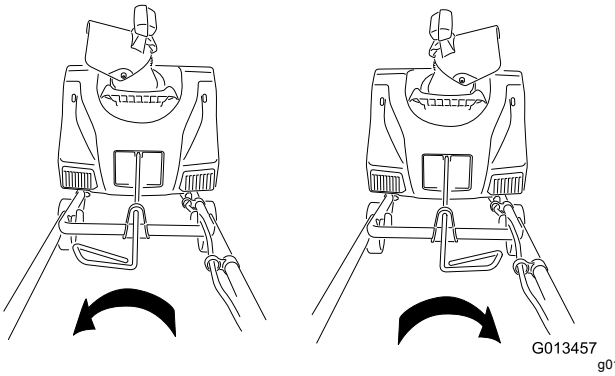

g013457

Figure 7

Operation

Product Overview

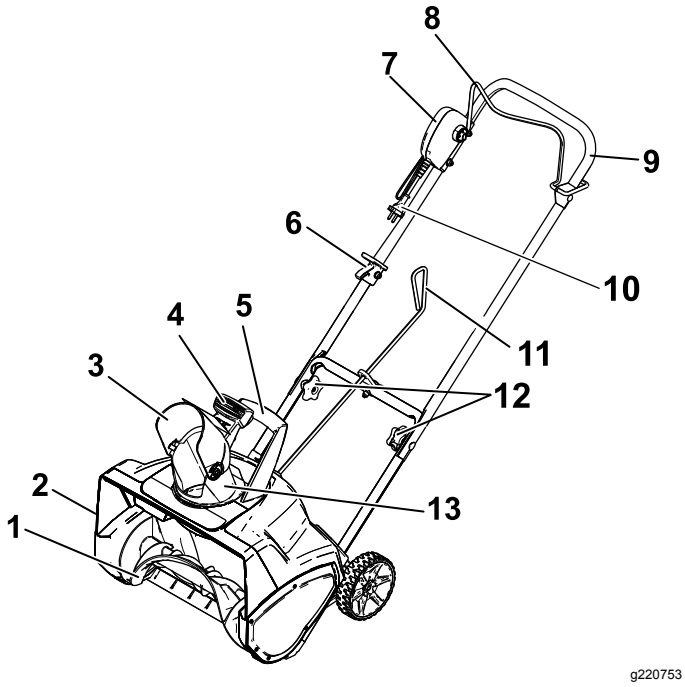

Figure 8

1. Rotor blades
2. Belt cover (not shown)
3. Chute deflector
4. Chute deflector trigger
5. Discharge chute handle
6. Cord guide
7. Interlock button
8. Power control bar
9. Upper handle
10. Cord
11. Chute control rod
12. Handle knobs
13. Discharge chute

Important: **This machine is intended for outdoor, residential use only. Do not use it indoors or for commercial or industrial purposes.**

Connecting to a Power Source

To reduce the risk of electric shock, this machine has a polarized plug (i.e., 1 blade is wider than the other). Use only a polarized plug, UL-listed (CSA certified in Canada) extension cord recommended for outdoor use. A polarized plug will fit in a polarized cord only one way. If the plug does not fit fully in the cord, reverse the cord. If it still does not fit, purchase a polarized extension cord. If you have a polarized extension cord and the extension cord plug does not fit fully into the wall receptacle, reverse the plug. If it still does not fit, contact a qualified electrician to install the proper outlet. Do not change the machine or extension cord plug in any way.

⚠ DANGER

Contact with water while operating the machine could cause electric shock, causing injury or death.

- **Don't handle the plug or the machine with wet hands or while standing in water.**
- **Use only an extension cord recommended for outdoor cold-weather use.**

Extension Cord Length	Minimum Wire Gauge (A.W.G.)
25 ft	16
50 ft	16
100 ft	16
150 ft	14

Note: Do not use an extension cord over 150 ft.

Important: **Check the extension cord frequently during use for holes or cracks in the insulation. Do not use a damaged cord. Do not run the cord through standing water or wet grass.**

Note: To prevent the extension cord from disconnecting during operation, use the cord lock on the upper handle before you connect it to the machine (Figure 9).

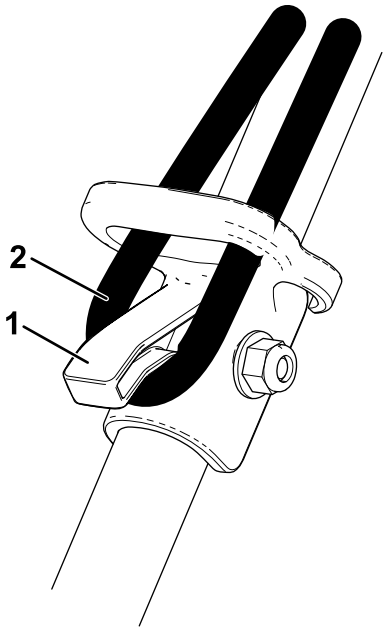

Figure 9

1. Cord lock
2. Extension cord

⚠ WARNING

A damaged appliance cord can cause a shock or fire.

Thoroughly inspect the appliance cord before using the machine. If the cord is damaged, do not operate the machine. The supply cord or switch of this equipment cannot be replaced, and the equipment shall be scrapped.

Starting and Stopping the Motor

1. To start the motor, insert the interlock key, press and hold the interlock button, and squeeze the power control bar to the handle (Figure 10).

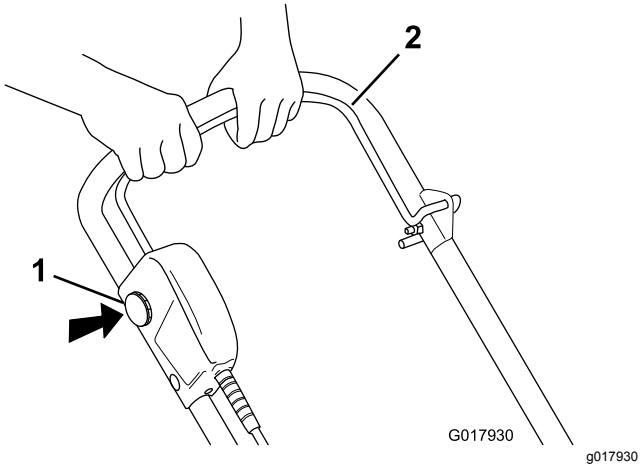

Figure 10

1. Interlock button
2. Power control bar

Note: You may release the interlock button after you squeeze and hold the power control bar to the handle.

2. To stop the motor, release the power control bar.

Note: When you stop the machine after you have finished removing the snow, also remove the key and disconnect the extension cord.

Adjusting the Discharge Chute and Chute Deflector

To adjust the discharge chute, move the handle on the chute control rod in the direction that you wish to direct the snow stream (Figure 6 and Figure 7).

To adjust the chute deflector (and therefore the height of the snow stream), squeeze the trigger and raise or lower the chute deflector (Figure 11).

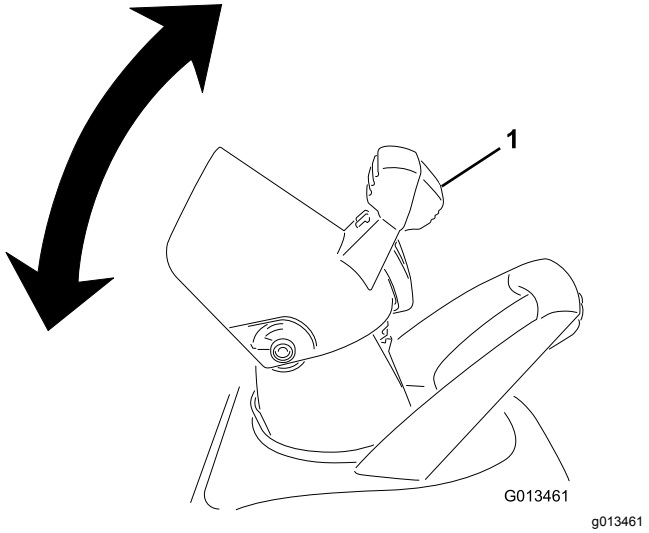

Figure 11

1. Chute deflector trigger

⚠ WARNING

A gap between the discharge chute and the chute deflector may allow the machine to throw snow and objects in the direction of the operator. Thrown objects could cause serious personal injury.

- **Do not force the chute deflector too far forward so that a gap appears between the discharge chute and chute deflector.**
- **Do not adjust the chute deflector with the power control bar engaged. Release the power control bar before adjusting the chute deflector.**

Operating Tips

⚠ WARNING

If the machine hits an object while in operation, the object could be thrown toward you or bystanders. Thrown objects could cause serious personal injury.

Keep the area to be cleared free of all objects which may be picked up and thrown by the rotor blades.

- Check the condition of the machine before operating it to ensure that the rotor turns freely.
- Always keep children and pets away from the area of operation.
- Keep the area to be cleared free of stones, toys, or other objects which the rotor blades can throw. Such items could be covered by snowfall and go unnoticed. If the machine strikes an object during operation, stop the machine, unplug the extension cord, remove the obstruction, and check the machine for damage.
- Begin removing snow near the electrical outlet and work outward. Blow back and forth, not away from and toward the outlet.
- When turning at the end of a swath, step over the cord and turn the machine.
- Always overlap each swath and discharge the snow downwind when possible.

⚠ WARNING

When using the discharge chute handle, never direct the snow discharge chute toward you or bystanders. The machine can throw objects and cause serious personal injury.

When using the discharge chute handle, always turn the discharge chute in the opposite direction from where you or bystanders are standing.

- Keep the extension cord clear of obstructions, sharp objects, and all moving parts. Do not pull sharply on cord or abuse it in any manner. Inspect the extension cord frequently for damage that may result in an electric shock. If the extension cord is damaged, replace it.
- In cold and snowy weather conditions, some controls and moving parts may freeze. Therefore, if any control becomes difficult to operate, stop the motor, disconnect the extension cord, and check for frozen parts. Do not use excessive force when trying to operate frozen controls. Bring the machine indoors to thaw frozen controls before operating it.
- When operating the machine, keep the wheels 1 inch (2.5 cm) off the pavement by tipping the machine forward. This helps prevent the snow from building up on the wheels.
- After clearing the snow, let the motor run for a few minutes so that moving parts do not freeze. Then shut off the motor, wait for all moving parts to stop, and wipe the ice and snow off the machine. Rotate the chute crank several times to remove any snow.

Maintenance

Important: **All electrical repairs should be performed by an Authorized Service Dealer only.**

Note: Determine the left and right sides of the machine from the normal operating position.

⚠ WARNING

If the extension cord is plugged into the machine, someone could accidentally operate the machine while you are performing maintenance on it, causing serious personal injury.

Remove the key and disconnect the extension cord before you perform any maintenance on the machine.

Lubricating the Machine

You do not need to lubricate the machine; all the bearings have been lubricated at the factory for the life of the machine.

Replacing the Scraper

The scraper is located at the bottom of the rotor housing as shown in Figure 12.

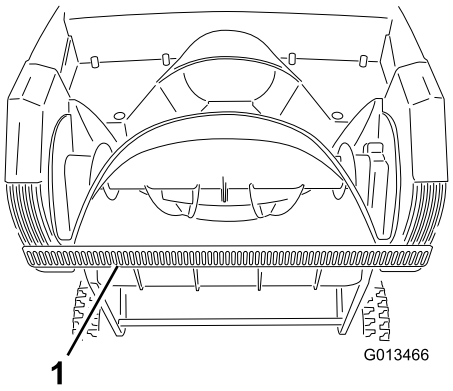

g013466

Figure 12

1. Scraper

1. Remove the screw from each side plate that holds the scraper (Figure 13) and 2 screws from under the machine (Figure 14) that secure the scraper to the machine.

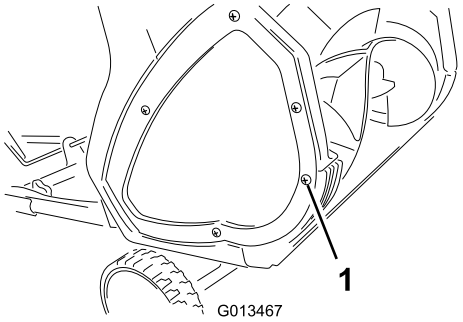

g013467

Figure 13

1. Screw (2)

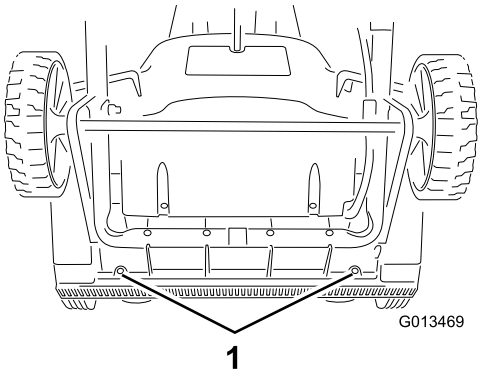

Figure 14

1. Screws

2. Remove and discard the old scraper.
3. Install the new scraper, and fasten it securely with the 4 screws that you previously removed.

Replacing the Rotor

1. Remove the screws that secure the right side plate to the machine frame (Figure 15).

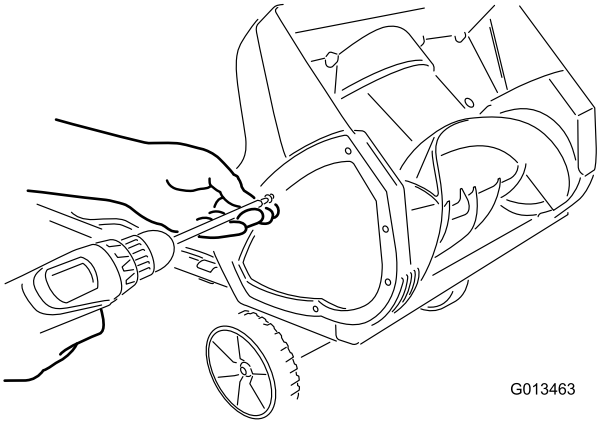

Figure 15

2. Remove the rotor pin (Figure 16).

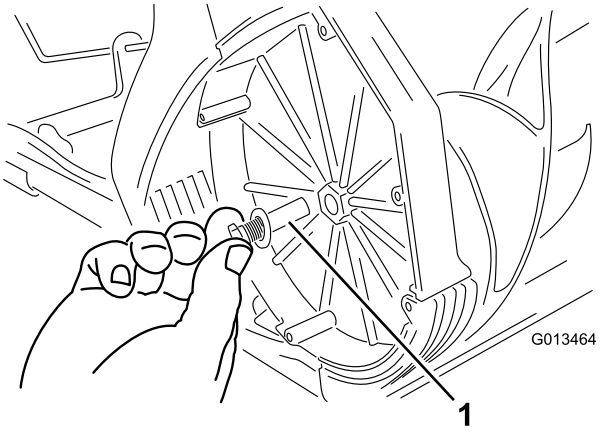

Figure 16

1. Rotor pin

3. Remove the old rotor.
4. Install the new rotor by inserting the end of the rotor onto the fitted end in the housing and rotating the rotor until it snaps into place (Figure 17).

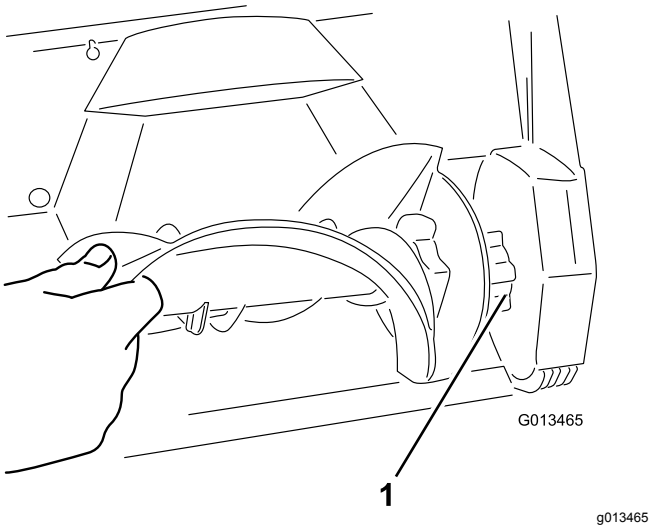

Figure 17

1. Fitted end of the rotor

Note: Ensure that the nut that secures the rotor pin remains inside the recessed hole in the right inside wall of the housing.

Note: The housing will flex when you install the rotor.

5. Tighten the bolt on the side of the housing.
6. Install the right side plate with the screws that you removed in step 1.

Service

Toro has designed this machine to give you years of trouble-free use. Should it need service, bring the machine to an Authorized Toro Service Dealer.

Double-insulated Appliances

In a double-insulated appliance, two systems of insulation are provided instead of grounding. No grounding means is provided on a double-insulated appliance, nor should a means for grounding be added to the appliance. Servicing a double-insulated appliance requires extreme care and knowledge of the system, and should be done only by the qualified service personnel at an Authorized Toro Service Dealer. Replacement parts for a double-insulated appliance must be identical to the parts they replace. A double-insulated appliance is marked with the words “Double Insulation” or “Double Insulated.” The symbol (square within a square) ⧈ may also be marked on the appliance.

Product Information

A model and serial number decal is located on the housing. Always refer to specific numbers on the decal in correspondence or when you need replacement parts.

Storage

1. Run the machine for a few minutes and wipe away any melted snow on the machine.
2. Remove the key and disconnect the extension cord from the machine.
3. Examine the extension cord thoroughly for signs of wear or damage. Replace it if it is worn or damaged.
4. Examine the machine thoroughly for worn, loose, or damaged parts. To repair or replace parts, contact an Authorized Service Dealer for assistance.
5. Store the extension cord with the machine.
6. Store the machine in a clean, dry place.

European Privacy Notice

The Information Toro Collects
Toro Warranty Company (Toro) respects your privacy. In order to process your warranty claim and contact you in the event of a product recall, we ask you to share certain personal information with us, either directly or through your local Toro company or dealer.

The Toro warranty system is hosted on servers located within the United States where privacy law may not provide the same protection as applies in your country.

BY SHARING YOUR PERSONAL INFORMATION WITH US, YOU ARE CONSENTING TO THE PROCESSING OF YOUR PERSONAL INFORMATION AS DESCRIBED IN THIS PRIVACY NOTICE.

The Way Toro Uses Information
Toro may use your personal information to process warranty claims, to contact you in the event of a product recall and for any other purpose which we tell you about. Toro may share your information with Toro's affiliates, dealers or other business partners in connection with any of these activities. We will not sell your personal information to any other company. We reserve the right to disclose personal information in order to comply with applicable laws and with requests by the appropriate authorities, to operate our systems properly or for our own protection or that of other users.

Retention of your Personal Information
We will keep your personal information as long as we need it for the purposes for which it was originally collected or for other legitimate purposes (such as regulatory compliance), or as required by applicable law.

Toro's Commitment to Security of Your Personal Information
We take reasonable precautions in order to protect the security of your personal information. We also take steps to maintain the accuracy and current status of personal information.

Access and Correction of your Personal Information
If you would like to review or correct your personal information, please contact us by email at legal@toro.com.

Australian Consumer Law

Australian customers will find details relating to the Australian Consumer Law either inside the box or at your local Toro Dealer.



Count on it.