1968

TORO®

REFERENCE DRAWINGS WITH PARTS LIST

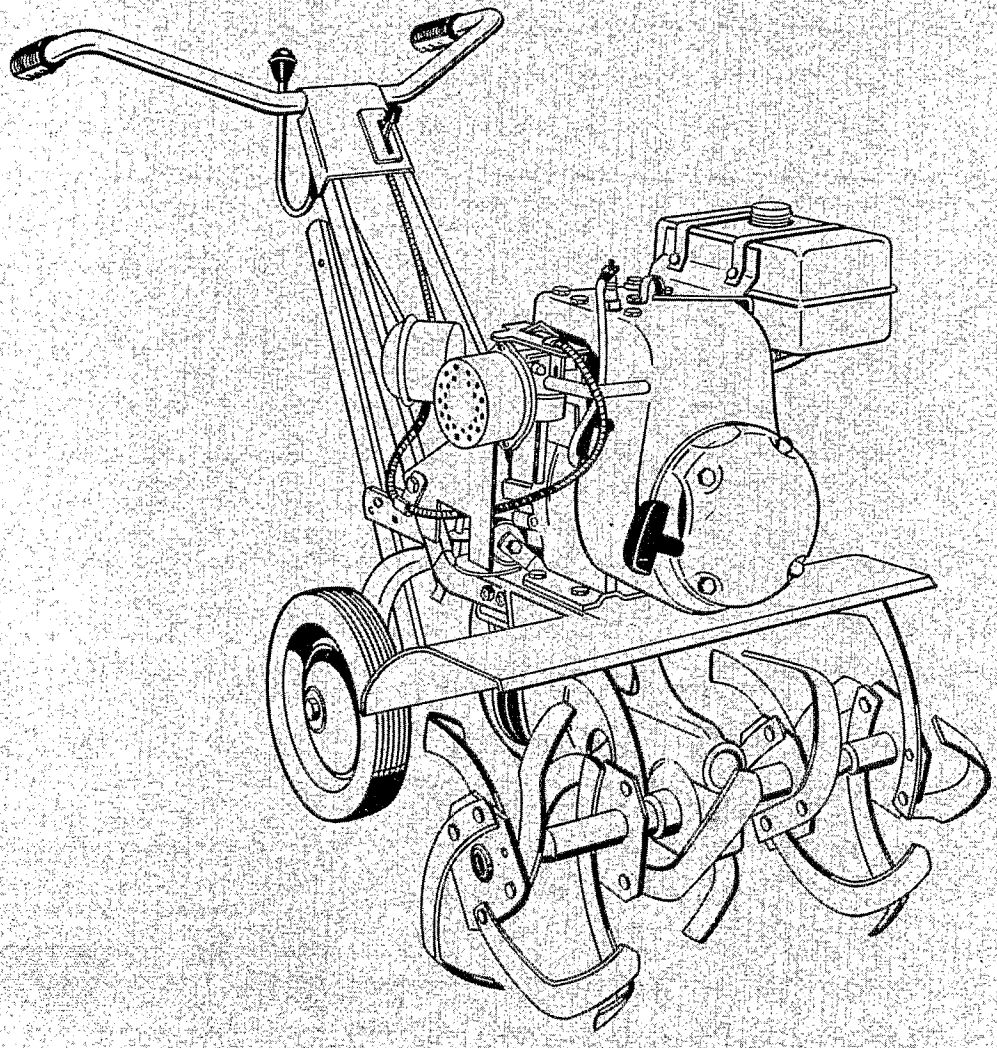

POWER GARDEN TILLER

Models 58000-3HP, 58100-4HP, 58200-5HP.

(Includes serial numbers 800001 & up)

PRICE 25c

TILLER PARTS LIST

Ref. No.	Part No.	Description	3 HP	4 HP	5 HP
1	7-0043	a. Chassis	1	1	1
	256-167(s)	b. Oilite Bearing	1	1	1
	7-0044	c. Oil Seal	1	1	1
	254-89(s)	d. Bearing Cup	1	1	1
	252-52	e. Needle Bearing	1	1	1
	7-0045	f. Oil Seal	1	1	1
2	7-0011	Worm Wheel Assembly (Consists of)	1	1	1
	7-0046	a. Shaft, Worm Wheel	1	1	1
	7-0047	b. Worm Wheel	1	1	1
	3257-33(s)	c. Woodruff Key	2	2	2
3	7-0012	Shaft, Worm	1	1	1
4	7-0013	Snap Ring	1	1	1
5	254-88(s)	Bearing Cone	1	1	1
6	7-0014	Spacer, Rear	1	1	1
7	3257-23	Woodruff Key	1	1	1
8	7-0016	Worm	1	1	1
9	7-0015	Spacer	1	1	1
10	251-207(s)	Bearing	1	1	1
11	237-71(s)	O Ring	1	1	1
12	7-0017	Plug	1	1	1
13	7-0018	Snap Ring	1	1	1
14	7-0020	Gasket	1	1	1
15	7-0021	Cap Assy (Consists of)	1	1	1
	7-0048	a. Cover	1	1	1
	252-52	b. Needle Brg.	1	1	1
	7-0045	c. Oil Seal	1	1	1
16	3274-31(s)	Screw	4	4	4
17	3274-8	Washer	4	4	4
18	7-0022	Idler Pulley & Arm (Consists of)		1	1
	7-0050	a. Idler Arm		1	1
	7-0051	b. Pulley		1	1
	323-9	c. Bolt		1	1
	32152-2 (s)	d. Nut		1	1
	7-0052	e. Washer		1	1
19	7-0352	Idler Pulley & Arm (Consists of)	1		
	7-0050	a. Idler arm	1		
	7-0136	b. Pulley	1		
	323-8	c. Bolt	1		
	32152-2 (s)	d. Nut	1		
20	7-0023	Idler Bearing	2	2	2
21	7-0024	Washer, Flat	2	2	2
22	32120-35	Snap Ring	2	2	2
23	281-1	Pipe Plug	1	1	1
24	7-0025	Spring	1	1	1
25	7-0073	Belt		1	1
26	7-0354	Belt	1		
27	32152-2 (s)	Conelok Nut	2	2	2
28	7-0033	Handle Bracket	2	2	2
29	32141-81(s)	Leveler Head Bolt	4	4	4
30	3253-21	Washer	4	4	4
31	3217-7	Nut	4	4	4
32	221275(s)	Engine Tecumseh H50-9378 5HP			1
33	221-272(s)	Engine Briggs & Stratton 100292 4HP		1	
34	221-294	Engine Tecumseh H30-35168F 3HP	1		
35	7-0068	Belt Guide		1	
35	7-3364	Belt Guide	1		
36	7-0335	Belt Guide			1
37	7-0336	Belt Guide			1
38	2-0780	Spacer		2	
39	321-11	Bolt		2	
39a	3210-2	Bolt	2		4
40	7-0024	Washer		2	
40a	3256-3	Washer	2		4
41	3253-3	Lockwasher	2	2	
42	7-0072	Plant Shield	1	1	1
43	233-17(s)	Knob		1	1
44	322-7	Bolt			4
45	322-11	Bolt	4	4	
46	3256-3	Washer	12	12	12
47	3253-4	Lockwasher	4	4	4
48	3217-6	Nut	4	4	4
49	7-0081	Washer	4	4	4
50	3210-2	Bolt	4	4	4
51	7-0035	Pulley		2	2
52	3242-13(s)	Set Screw	2	2	2
53	3257-24	Woodruff Key	1	1	1
54	7-0034	Pulley		1	1
54a	7-0350	Pulley	1		
55	7-0070	Pulley (Eng.)		1	1
55	7-0346	Engine Pulley	1		
56	7-0071	Reverse Sheave	1	1	1
57	7-0036	Square Key	2	2	2
58	3245-7	Set Screw	1	1	1
59	322-7	Bolt		2	2
60	7-0032	Washer	1	1	1

INSIST ON GENUINE TORO PARTS

COPYRIGHT 1967 BY
TORO MANUFACTURING CORPORATION
MINNEAPOLIS, MINNESOTA — U.S.A.

EXPLODED VIEW OF TILLER

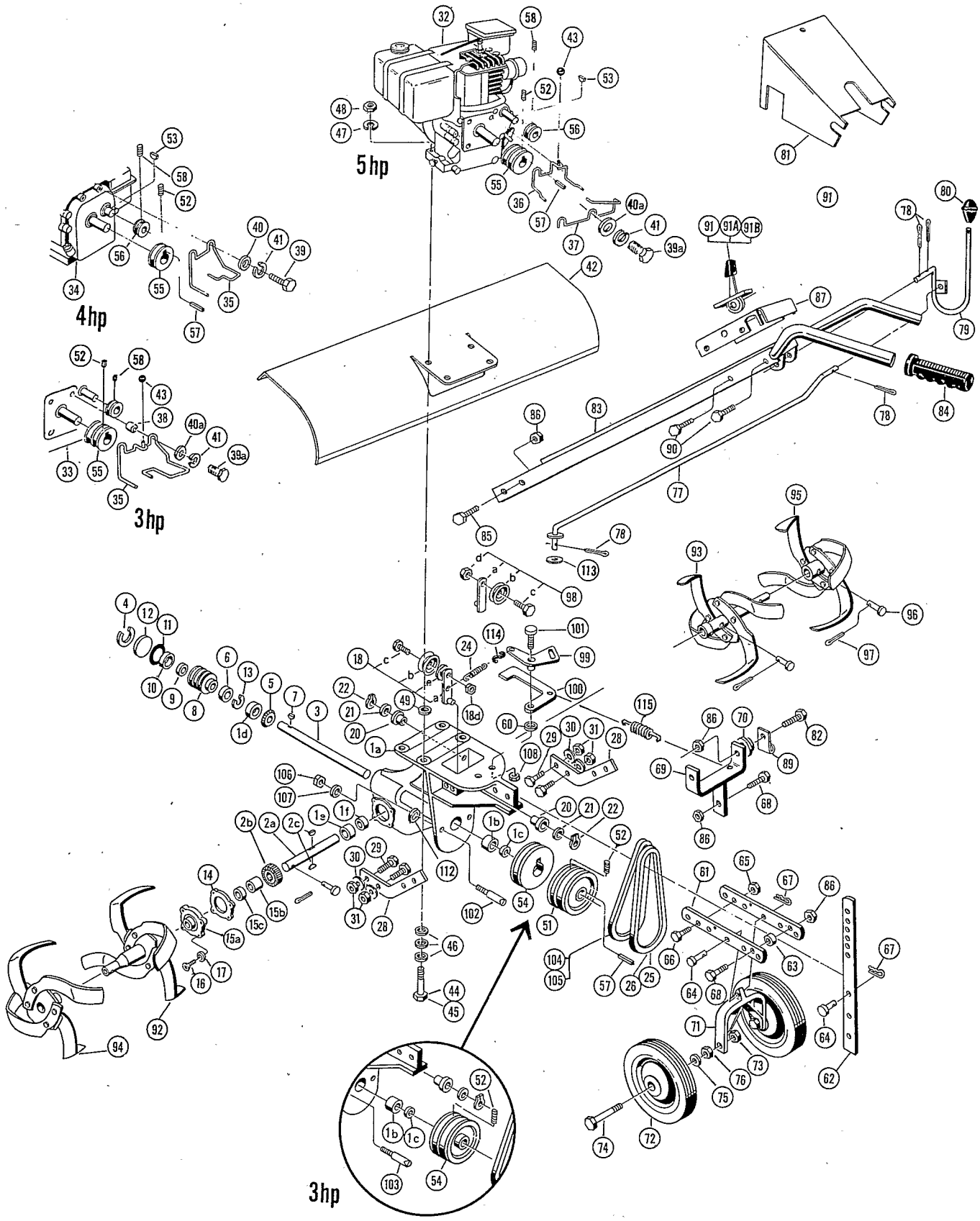

TILLER PARTS LIST

Ref. No.	Part No.	Description	3 HP	4 HP	5 HP
61	7-0037	Drawbar	2	2	2
62	7-0076	Depth Gage	1	1	1
63	7-0042	Spacer	1	1	1
64	7-0040	Clevis Pin	2	2	2
65	32152-2(s)	Lock Nut	2	2	2
66	323-29(s)	Bolt	2	2	2
67	3290-255	Hair Pin	2	2	2
68	322-6	Screw	4	4	4
69	7-0041	Support	1	1	1
70	7-2041	Spacer, Cover		2	2
71	7-0038	Wheel Bracket and Yoke	1	1	1
72	7-0075	Wheel Assy.	2	2	2
73	32152-3(s)	Nut	2	2	2
74	7-3552	Wheel Axle	2	2	2
75	3256-6	Washer Flat	2	2	2
76	3218-5	Nut	2	2	2
77	7-0078	Rod, Clutch	1	1	1
78	3272-7	Cotter Pin	4	4	4
79	7-0088	Shift Lever Assy.	1	1	1
80	233-18(s)	Knob	1	1	1
81	7-0080	Cover, Pulley		1	1
83	7-0087	Handle Bar Assy.	1	1	1
84	235-17 (s)	Grip, Handle	2	2	2
85	322-5(s)	Bolt	2	2	2
86	32152-1(s)	Nut	4	4	4
87	7-3365	Cover, Handle Bar	1	1	1
88	32104-77	Sems Screw	4	4	4
89	7-0077	Clip	1	1	1
90	32104-77	Screw	4	4	4
91	7-3361	Throttle Assy.		1	
91a	7-3362	Throttle Assy.	1		
91b	7-3363	Throttle Assy			1
92	7-0096	Tines L. H. Inner (Consists of)	1	1	1
	7-0104	a. Axle & Hub Inner	1	1	1
	7-0103	b. Tine R. H.	2	2	2
	7-0102	c. Tine L. H.	2	2	2
	323-7	d. Screw	4	4	4
	3253-21	e. Washer	4	4	4
	3217-7	f. Nut	4	4	4
93	7-0097	Tines R. H. Inner (Consists of)	1	1	1
	7-0104	a. Axle & Hub	1	1	1
	7-0097	b. Tine R. H.	2	2	2
	7-0102	c. Tine L. H.	2	2	2
	323-7	d. Screw	4	4	4
	3253-21	e. Washer	4	4	4
	3217-7	f. Nut	4	4	4
94	7-0098	Tines L. H. Outer (Consists of)	1	1	1
	7-0105	a. Axle & Hub Outer	1	1	1
	7-0103	b. Tine R. H.	4	4	4
	323-7	c. Cap Screw	4	4	4
	3253-21	d. Washer	4	4	4
	3217-7	e. Nut	4	4	4
95	7-0101	Tines R. H. Outer (Consists of)	1	1	1
	7-0105	a. Axle & Hub Outer	1	1	1
	7-0102	b. Tine L. H.	4	4	4
	323-7	c. Screw	4	4	4
	3253-21	d. Washer	4	4	4
	3217-7	e. Nut	4	4	4
96	7-0106	Pin	4	4	4
97	3272-7	Cotter Pin	4	4	4
98	7-0026	Idler Pulley Arm Assy. (Consists of)	1	1	1
	7-0055	a. Idler Arm Assy.	1	1	1
	7-0056	b. Idler Pulley	1	1	1
	323-8	c. Bolt	1	1	1
	32152-2(s)	d. Nut	1	1	1
99	7-0027	Bell Crank	1	1	1
100	7-0028	Rev. Link	1	1	1
101	7-0030	Shld. Bolt	1	1	1
102	7-0031	Belt Guide	2	2	2
103	7-0347	Belt Guide	2		
104	7-0074	Belt	1	1	
105	7-2166	Belt			1
106	3217-5	Nut	2	2	2
107	3253-3	Lockwasher	2	2	2
108	32152-1(s)	Nut	1	1	1
110	3210-2	Screw	2		
111	3253-4	Lockwasher	2		
112	3256-16 (s)	Flatwasher	2	2	2
113	7-0052	Flatwasher	1	1	1
114	7-3618	"S" Hook	1	1	1
115	7-1322	Spring	1	1	1

INSIST ON GENUINE TORO PARTS

TEARDOWN, REPAIR AND REASSEMBLY OF CHASSIS

TEARDOWN PROCEDURE

1. Remove the belt or belts from the tiller.

2. Remove the engine and tines from the tiller chassis.

3. Place the chassis in a vise, holding it around the casting directly under the engine base mounting pads.

4. Remove the gear case cover and drain the lubricant from the gear case.

5. Remove the worm shaft pulley by loosening the set screw and prying the pulley off over the key. Be careful not to break the pulley when prying it. USE a puller to reduce the possibility of breaking the pulley.

6. Remove the key from the worm shaft and check for any burrs around the keyway. If there is any roughness of the key or shaft, smooth with emery cloth.

7. Remove the snap ring from the front cover, using two screwdrivers to make the job easier.

8. Using a soft-headed mallet, or a block of wood to protect the end of the worm shaft, tap the worm shaft on the pulley end, forward about 3/16 to 1/4 inch. This will allow the worm wheel and axle shaft assembly to be removed.

9. With the worm wheel and axle shaft out of the chassis casting, remove the worm shaft through the front of the casting. If the plug was not freed by tapping on the pulley end of the worm shaft, continue to tap the end of the shaft until the plug is driven out of the casting.

10. Disassemble the worm shaft as follows:

The ball bearing on the front of the worm shaft will drop out of the casting and off of the shaft when the shaft is driven out of the casting. Remove the front spacer from the shaft.

Take the worm, which is keyed to the shaft, off the shaft. Knock the rear spacer off the shaft. It is not necessary to remove the snap ring from the worm shaft unless the complete shaft is being replaced.

Remove the roller bearing from the rear of the shaft by tapping it carefully until it loosens and slides off the shaft.

11. Clean the chassis inside and out, using solvent. Blow dry with compressed air.

REPLACEMENT OF OILITE AND NEEDLE BEARINGS

1. To replace the worm shaft Oilite bearing, use a long rod inserted through the front of the casting. Knock the bearing out through the rear of the casting. This will also remove the seal.

2. Remove the needle bearings from the casting and gear cover in the same manner. The best method of driving the needle bearings out of the castings is to use a tool with a piloted dimension slightly smaller than the inside diameter of the needle bearings.

3. To replace the Oilite bearing, coat the outside of the bearing with grease, and drive it in from the rear of the casting until it seats itself against the shoulder in the casting. The finished inside diameter of the Oilite bearing is 0.751 inch, and the bearing should be burnished to this size. The outside diameter of the worm shaft is 0.749-0.750 inch. Measure the parts, and compare against these dimensions to determine whether the bearing or shaft needs to be replaced.

4. Replace the needle bearings from the inside out. Drive them into the cover or casting with a tool having a piloted dimension slightly smaller than the I.D. of the needle bearing.

REASSEMBLY PROCEDURE

1. Reassemble the worm shaft in the reverse order of disassembly.

2. Space the rear tapered roller bearing about one inch from the snap ring. Insert the worm shaft into the case. Lightly tap the front end of the worm shaft until the worm gear starts to show through the axle shaft opening in the casting.

3. Replace the axle and worm wheel assembly, just barely starting the worm into the worm wheel.

4. Insert a rod or a punch through the hole in the axle, and turn the axle clockwise. This will mate the worm wheel with the worm and will reassemble the worm shaft.

5. Replace the front spacer on the worm shaft. Insert the front bearing into the casting and tap it in place with the wooden end of a hammer.

6. Replace the O-Ring into its recess in the front of the casting. Replace the cover and the snap ring.

7. Replace the gear case cover. Use a new gasket to prevent any possible loss of lubrication. Be sure that there is sufficient end play (0.006-0.013 inch) in the axle shaft. If necessary, install an additional gasket to increase the end play to the required amount.

8. Replace the lubricant in the case. Use No. 90 Hypoid gear lubricant and put enough in so that it will be level with the inspection plug opening.

9. Replace the oil seal on the rear end of the worm shaft and on both sides of the axle shaft. Apply a little grease to the inside of the seal to make assembly easier.

REPLACEMENT OF THE WORM WHEEL

1. If it is necessary to replace the worm wheel, press it off the shaft with an arbor press.

2. Check the inside diameter of the replacement worm wheel. This diameter should be 0.9945-0.9955 inch. If the inside diameter is less, press a steel ball of this size through the wheel with an arbor press to burnish the diameter to the correct finished size.

3. The correct outside diameter of the axle shaft is 0.9955-1.0005 inch. If the shaft is worn smaller than this dimension, replace the shaft.

REPLACEMENT OF MISCELLANEOUS PARTS

Replacement of the rest of the parts of the tiller is simple and not critical. Refer to the exploded view illustration and the parts list for identification of parts. If a part needs to be replaced, find that part on the exploded view and notice its reference number. Then turn to the parts list and find that reference number. Read across the line to determine the correct part number and description of the part.

PRODUCT CHANGES

In an effort to make improvements available to Toro owners as quickly as possible, minor changes are incorporated into Toro's products from time to time that do not become immediately shown in the Reference Drawing and Parts List. If such a change apparently has been made in your unit, which is not reflected in your manual, see your Toro distributor or his authorized Toro service dealer for information and parts numbers.

IMPORTANT ORDERING INSTRUCTIONS

Repair parts are available from your TORO distributor. To insure getting correct parts without delay, please furnish the following information:

1. Serial number of your product as shown on the name plate.
2. Part number, description and quantity of each part required.
3. Name and address where parts are to be shipped.
4. Do NOT order by reference number, use part number only.