Form No. 3431-241 Rev B

Front Brush Kit for Narrow and Wide Wiehle Rollers and Full Rollers

DPA Greensmaster® Cutting Units

Model No. 115-7377
Model No. 115-7378
Model No. 115-7379
Model No. 120-9621
Model No. 120-9622
Model No. 120-9623
Model No. 139-4383
Model No. 139-5117
Model No. 139-5125
Model No. 139-7410
Model No. 139-7412

Installation Instructions

Installation

1

Preparing the Machine

No Parts Required

Procedure

Refer to your cutting unit *Operator's Manual* for instructions to prepare the machine and cutting unit for installation.

2

Installing the Brush

Parts needed for this procedure:

1	Brush
2	Screw
2	Capscrew
2	Clamp

Procedure

1. Remove the plow bolt, washer and nut securing one of the height of cut (HOC) arms to the cutting unit side plate (Figure 1).
2. Loosen the roller mounting screws in the HOC arms (Figure 1).
3. Slide the HOC arm off the roller shaft (Figure 1).
4. Slide the roller shaft out of the HOC arm on the opposite end of the cutting unit.

© 2019—The Toro® Company
8111 Lyndale Avenue South
Bloomington, MN 55420

Register at www.Toro.com.

CE

Original Instructions (EN)
Printed in the USA
All Rights Reserved

3431-241 B

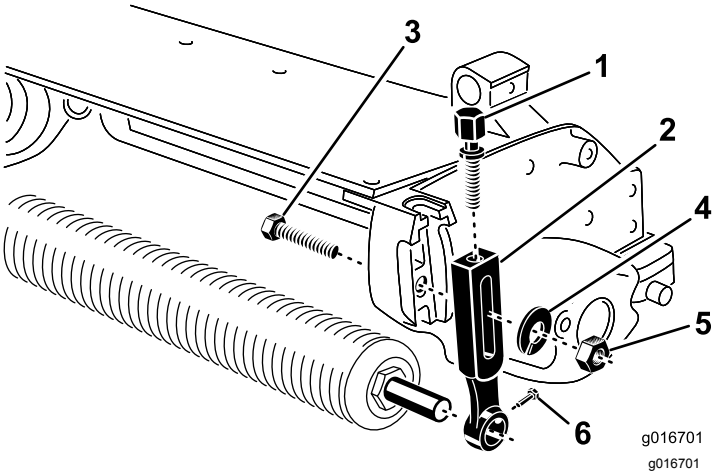

Figure 1

1. Adjusting screw
2. HOC arm
3. Plow bolt
4. Washer
5. Nut
6. Roller mounting screw

5. Loosely install a capscrew and nut onto each clamp (Figure 2). Do not tighten.
6. Insert a shaft clamp onto each end of the roller shaft (Figure 2).
7. Loosely install the roller to the cutting unit with the HOC arm and fasteners previously removed.
8. Adjust to the desired height of cut and tighten HOC arm mounting fasteners.
9. Position the brush between the front roller and the cutting unit as shown in Figure 2.

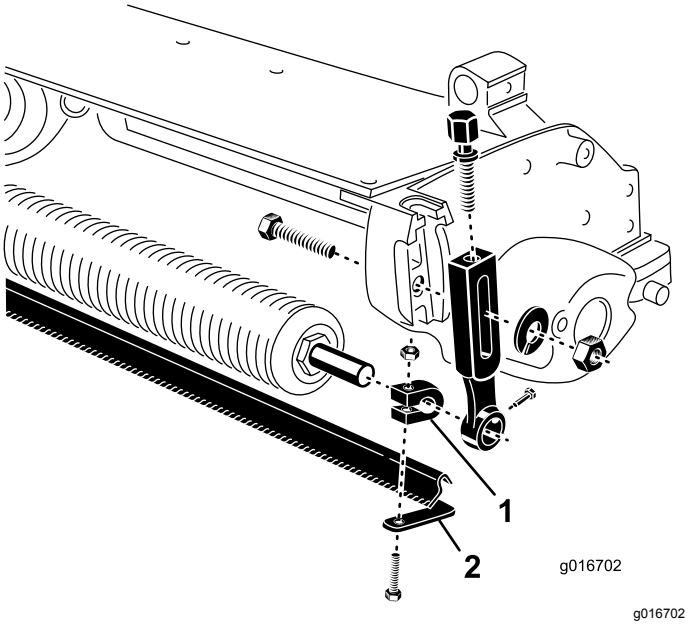

Figure 2

1. Clamp
2. Scraper

10. Center the brush on the roller.
11. Move the scraper in or out until the desired roller clearance is attained. The scraper must not contact the roller. Ensure that the scraper is parallel to the roller.
12. Tighten the capscrews and nuts securing the clamps to the roller shaft. Torque to 11 N·m (96 in-lbs).
13. Center the roller and brush between the HOC arms.
14. Rotate the brush down until the desired turf contact is attained.
15. Tighten the roller mounting screws.