TORO®

1967

OWNER'S OPERATING AND PARTS MANUAL

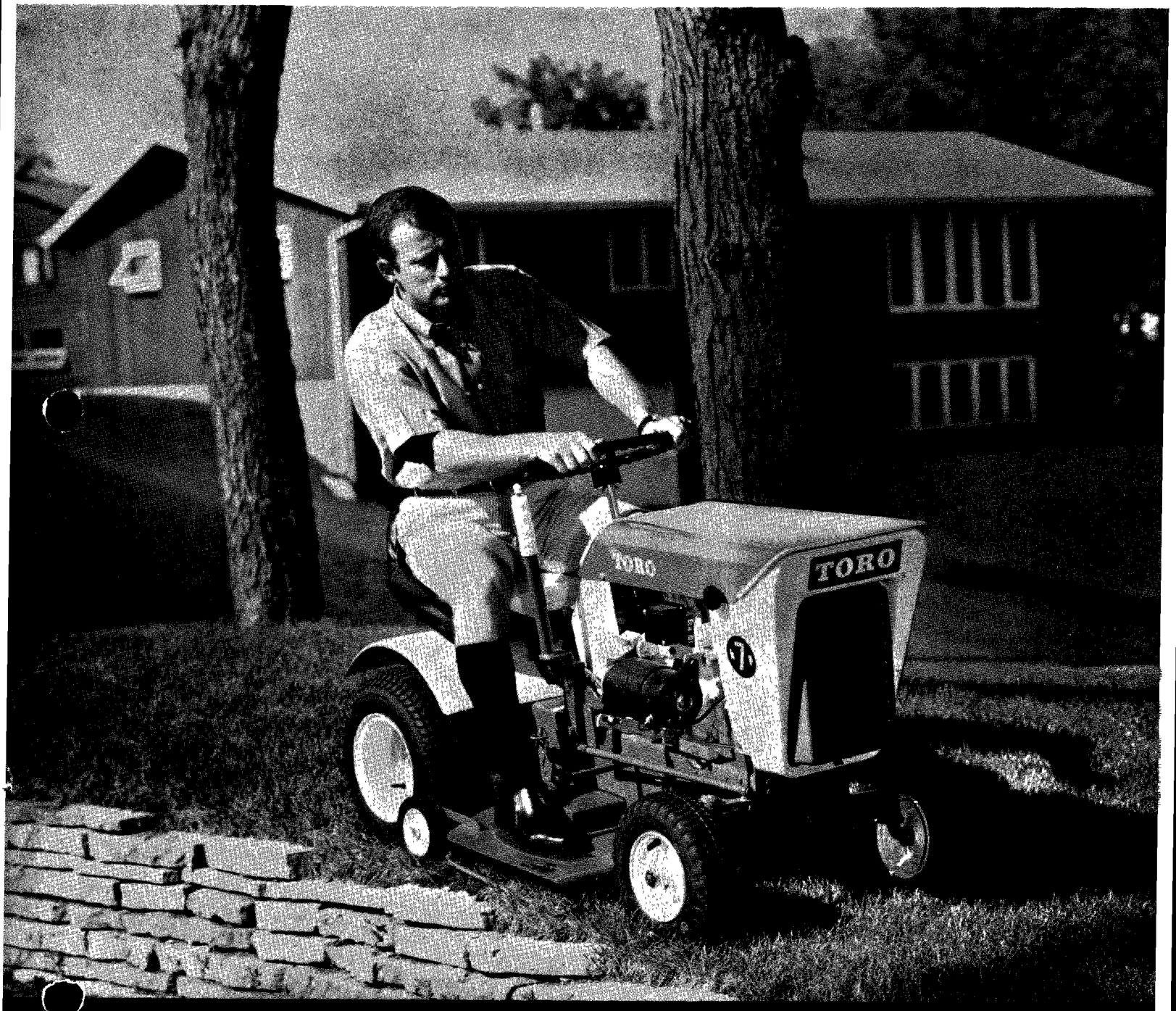

7 HP LAWN TRACTOR

MODEL NOS. 55000 (MANUAL START) AND 55100 (ELECTRIC START)
(INCLUDES SERIAL NOS. 700001 AND UP)

PRICE 25¢

TABLE OF CONTENTS

Section	Page
GETTING YOUR TRACTOR READY FOR WORK	3
General	3
How to Start the Engine	4
How to Stop the Engine	4
How to Move the Tractor	5
The Tractor has limits	5
Keep Your Tractor Working for You	5
Keep It Properly Lubricated	5
Let Authorized Service Stations Perform Major Service	7
MAINTENANCE OF TRACTOR	7
Tire Pressure	7
Adjustments	7
Engine	7
Belt Replacement	7
Winterization for Storage	7
USING YOUR MOWER	8
Learn the Mower Controls	8
Think of Safety Before You Mow	8
PUT YOUR MOWER TO WORK	8
Choose the Best Cutting Height	8
How to Set the Cutting Height	8
Use the Right Speed for Mowing	9
Save Mowing Time With Planning	9
Mowing Tips and Precautions	10
Mowing Installation	10
Mower Removal	10
Mulcher Screen	10
MOWER MAINTENANCE	11
Blades	11
Removal and Replacement of Parts	11
Blades	11
Blade Belts	11
Mower Drive Belt	12
ATTACHMENTS INCREASE YOUR TRACTORS' USEFULLNESS	12
Snow Removal Attachments	12
Other Attachments	12
Mower Winter Storage	12
ADDITIONAL INSTRUCTIONS FOR TRACTORS WITH ELECTRICAL SYSTEMS	12A
Getting Your Tractor Ready for Work	12A
Learning the Controls	12A
How to Start the Engine	12A
How to Stop the Engine	12A
Electrical System Maintenance	12A
Battery	12A
Winter Storage	12B

Copyright 1966 by
Toro Manufacturing Corporation
Minneapolis, Minnesota 55420
U.S.A.

Outdoor Power Equipment Institute, Inc. SPONSORED
CONFORMS TO SAFETY ASA STANDARD

NOTE

You have just become the proud owner of a very rugged, dependable and useful piece of equipment. Used properly, it will give you many years of economical and dependable service. Get your tractor off to a good start by reading these instructions before you commence operations. These instructions are designed to help make the operation of your equipment as enjoyable and trouble free as is mechanically possible.

GETTING YOUR TRACTOR READY FOR WORK

GENERAL

If your dealer hasn't already assembled your tractor, it will be necessary to attach the parts outlined below.

1. Install the steering wheel by placing it over the steering post so that the small hole in the wheel aligns with the hole in the steering post. Drive the roll pin provided through the wheel and shaft by tapping with a hammer. Snap the steering wheel cap into place.

2. Prior to commencing operations check the engine to be sure that the crankcase has the required quantity and grade of engine oil specified in the manufacturer's manual supplied with the tractor. Check the transmission for grease and be certain that all points outlined in the lubrication chart, figure 4, have been lubricated.

3. Fill the gas tank with a good grade of regular automotive gasoline.

CAUTION

Always fill the gasoline tank out of doors. Avoid spilling gasoline. Do NOT smoke while pouring gasoline.

For models equipped with electrical system see page 12A.

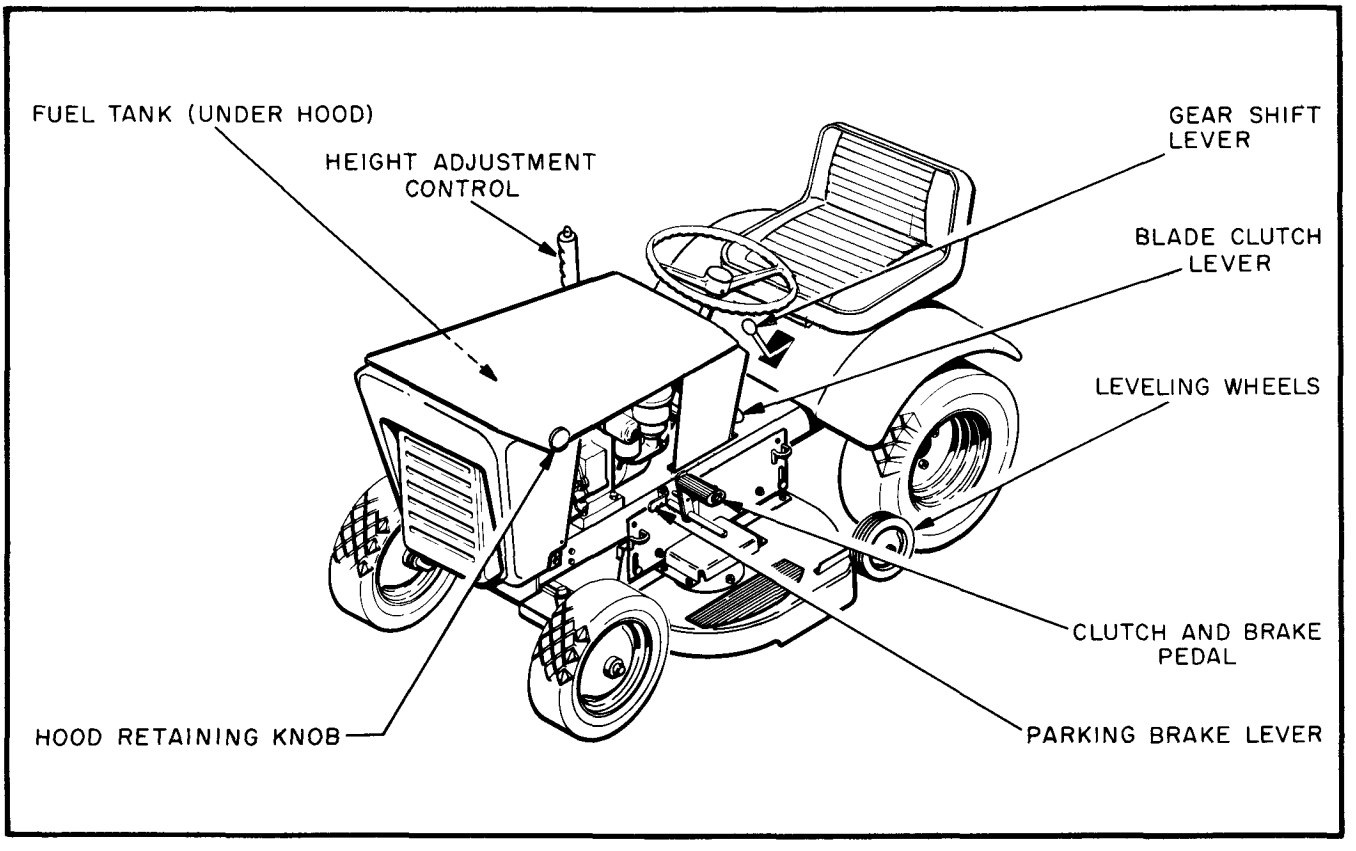

Figure 1. Assembly of Tractor Viewed from Left Side

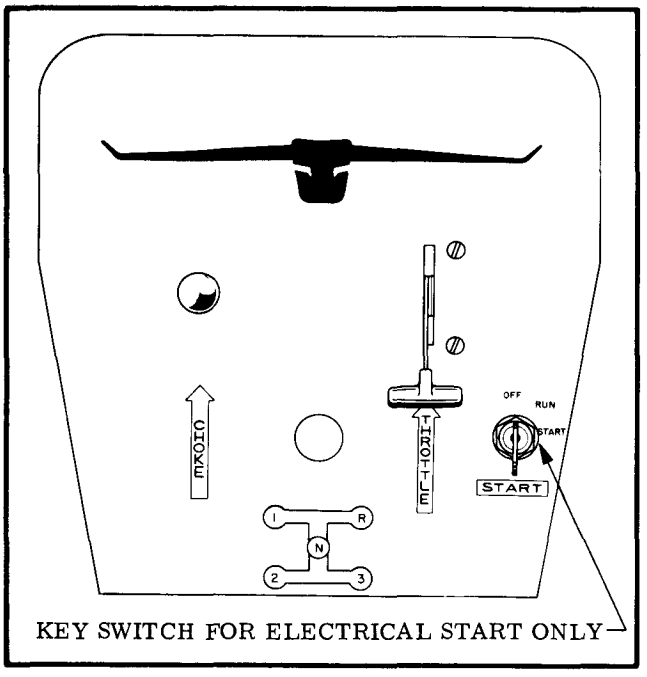

Figure 2. Location of Controls

The engine operating controls are grouped on the control panel on the rear of the hood just under the steering wheel (figure 2). The control functions are marked on the panel. Gear shift, clutch and brake, are located convenient to the operator.

1. Choke control. The choke is in the full choke position when the control rod is pulled all the way out.

2. Throttle control. The throttle control serves two purposes. In the full rearward position, it grounds the ignition system and prevents the engine from running. When the throttle is pushed forward about a half an inch, the ignition ground is removed and the throttle is in the idle speed position. In the furthest forward position, the engine is in the "wide open" or high speed position.

3. Starter. The Briggs and Stratton engine is equipped with a rope starter with an automatic rewind system. The starter handle will be found under the hood on the left side of the tractor. It is accessible without removing the hood.

4. Clutch control. The clutch is controlled by the foot pedal on the left side of the tractor. This pedal serves a dual function, initial travel of the clutch control disengages the transmission to permit shifting gears. As the clutch control is pushed further it applies the wheel brake.

5. Parking brake. The parking brake control is a small lever with two tangs on its lower surface just behind the clutch control. To engage, press the clutch control down and swing the parking brake lever over so that it rests on the roll pin in the clutch control lever. Release the pressure on the clutch so that one of the tangs in the parking brake lever engages the roll pin. To release, press the clutch down and swing the parking brake lever to the rear.

6. Gear shift lever. The gear shift lever is located just forward of the seat, between the operator's legs. Gear selection is made according to the gear position diagram on the control console.

HOW TO START THE ENGINE

1. Turn on the valve under the fuel tank.

2. Be sure the gear shift lever is in the neutral position.

3. Firmly depress the clutch pedal and engage the parking brake.

4. Pull the choke lever all the way out and advance the throttle about one-half inch from the fully closed position.

5. Pull the starter handle swiftly but do not let go of the handle as the rope rewinds. This will prevent backlash in the rewind mechanism. When starting a cold engine that has not been run for a few days, and especially when starting a new engine, it may be necessary to pull the starter a number of times.

6. When restarting a hot engine, set the throttle control approximately in the middle of its travel area. Do not choke the engine when starting hot. If the engine does not start on the first one or two tries, move the throttle a little further toward the open position and try again. As you become accustomed to your tractor, you will develope a "feel" for the proper settings for this operation.

HOW TO STOP THE ENGINE

1. Pull the throttle all the way back to the STOP position and the engine will stop. Do NOT stop the engine by pulling the choke control out and choking the engine until it stops. This sometimes facilitates re-starting but it also gives the cylinder wall and piston rings a bath in raw gasoline and removes the lubricating oil from the cylinder. This practice will materially shorten the life of the engine.

2. If the engine has been run for a fairly long period or has been operated under a heavy load just prior to shutting down, it is a very good practice to allow the engine to run at a smooth idling speed for a period of two or three minutes before shutting down. This permits the temperatures to equalize in an air-cooled engine and allows the engine to cool slowly from the critical high temperatures developed during operation. This slow cooling process prevents the development of metal stresses during the cooling period. This practice will materially lengthen the life of your engine.

Refer to the engine manual before operating your tractor. A choice of break-in methods is available.

1. Operate the tractor without load at about one-half throttle for the first half hour and with a light load for the first hour. Operate it in each of the three forward speeds and in reverse during this break-in period.

2. As an alternative, set the rear of the tractor on a block to raise the rear wheels a little above the floor and operate the engine at about one-half throttle until it has used up one-half tank or more of gasoline. Shift the transmission into all three forward speeds and into reverse during the break-in run.

Change the engine oil after the first five hours and every 25 hours thereafter.

HOW TO MOVE THE TRACTOR

1. With the engine running, press the clutch pedal down with your foot and disengage parking brake.

2. Move the gear shift lever into the speed you want. A shifting diagram is applied to the tractor where you can see it as you sit in the seat (figure 2) or refer to figure 3 below. You can start from a complete stop in any gear. Do not attempt to shift from one gear to another while running. If a change of gear is desired, stop the tractor, shift to the new gear desired and start again.

3. Always depress the clutch pedal when shifting gears.

4. If you are starting in high gear, slow the engine down a little before letting up on the clutch pedal, then increase the engine speed after the clutch takes hold.

5. If you seem to have any difficulty getting into any gear, jog the clutch pedal a little to get the gear into position where they will mesh. Never force the lever.

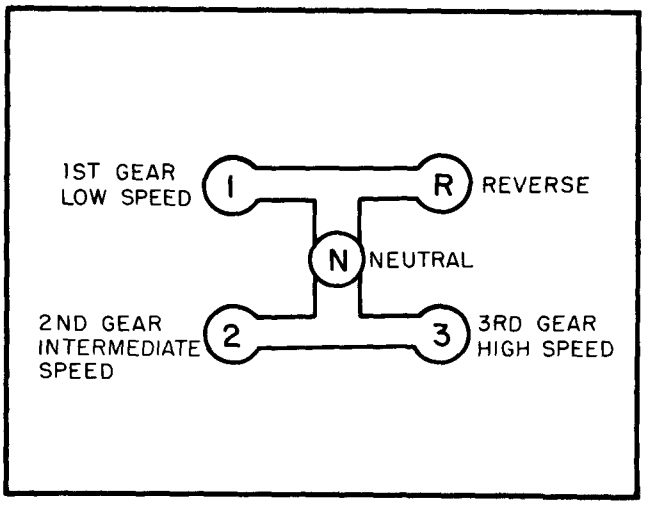

Figure 3. Gear Shift Pattern

THE TRACTOR HAS LIMITS

Observing the limits of the tractor will help it serve you longer. Overload and mistreatment can shorten its life or impair its usefullness, just as they can with any tool or machine.

1. The engine is not guaranteed on a slope of more than 45 degrees in any direction, as it cannot receive proper lubrication.

2. Avoid pulling loads that are so heavy they cause the drive belt to slip or wheels to spin.

3. If the tractor stalls due to an overload, but the engine continues to run, shift immediately to neutral and start out again slowly. Failure to do this will cause excessive belt wear or breakage.

4. If the engine stalls due to overload, disengage the blade clutch and shift into neutral before restarting. Then, find out what caused the overload and avoid it to make it easier when starting out again.

KEEP YOUR TRACTOR WORKING FOR YOU

The simple service required for your tractor will result in longer life and dependable operation.

KEEP IT PROPERLY LUBRICATED

1. Use an automotive type grease gun to lubricate the front axle king pins, steering column and front wheels.

2. Observe the engine manufacturer's oil requirements carefully. Failure to do so will not only void the warranty but it could also result in engine failure, creating expensive repair service.

3. If it is necessary to add oil to the transmission (check after every 25 hours of operation with the tractor setting level on its front wheels), use a #90 transmission gear lubricant. Hypoid is best. Do not fill above the level of the inspection plug as this will cause blown oil seals, continual leakage, and possible consequent damage to the transmission. The transmission has a lubricant capacity of approximately 2 pints.

4. When lubricating the chassis, apply a drop or two of oil to all pivot points in the steering, brake and clutch linkages. (When lubricating the underside of the tractor chassis it may be necessary to tip the tractor over on its side. Always remove the oil bath air cleaner and tip to the left side of the tractor away from the carburetor.) Lubricate the front wheels, king pins and steering column through the Zerk fittings provided. (Oilite bearings are used in rear wheels and axle and need no lubrication.) See Lubrication Chart, Figure 4.

5. In order to lubricate the underside of the tractor chassis, it will be necessary to remove the mower attachment. By reversing the instructions as shown on page 10 for assembling the mower attachment to the tractor you will be able to remove the cutting unit easily and quickly.

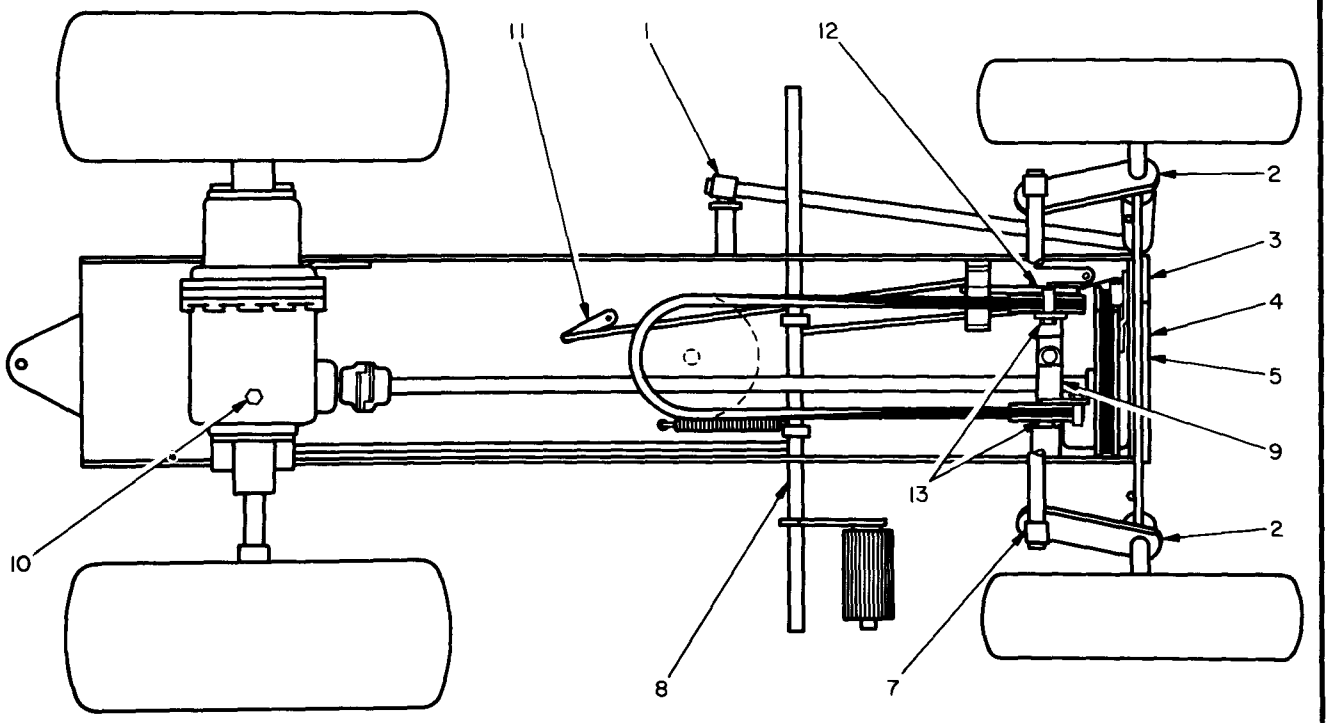

LUBRICATION POINT	LUBRICANT TO USE	HOW OFTEN
1. Steering Rod Pivot	Automotive Engine Oil	25 hours
2. King pin Bearings	Automotive Chassis Grease	Twice a season
3. Tractor Drive Belt Idler Arm Pivot	Automotive Engine Oil	25 hours
4. Tractor Drive Belt Idler Pulley Bearings	Automotive Engine Oil	25 hours
5. Front Frame Pivot Point	Automotive Engine Oil	25 hours
6. Front Wheel Bearings	Automotive Chassis Grease	25 hours
7. Tie Rod Ends	Automotive Chassis Grease	25 hours
8. Clutch and Brake Pedal Pivots	Automotive Engine Oil	25 hours
9. Jackshaft Bearing	Do Not Lubricate. Sealed Lubricants Last Life Of Bearing.	---------
10. Transmission (Drain P lug)	#90 Gear Lubricant	Once a season
Engine Crankcase (Not Illustrated)	See Engine Manufacturer's Illustrations	25 hours
Steering Column Bearings (Not Illustrated)	Automotive Chassis Grease	25 hours
11. Blade Clutch Lever Pivot	Automotive Engine Oil	25 hours
12. Blade Clutch Idler Pivot	Automotive Engine Oil	25 hours
13. Blade Belt Pulley Bearings Pivots	Automotive Engine Oil	25 hours
Blade Spindle Bearings (Not Illustrated)	Do Not Lubricate. Sealed Lubricants Last Life of Bearing.	

Figure 4. Lubrication Chart

LET AUTHORIZED SERVICE STATIONS PERFORM MAJOR SERVICE

If your tractor should require service other than the lubrication described in these instructions, take it to an authorized dealer or to a service station.

Only if your tractor is repaired correctly and its replacement parts really fit can maximum results and safety be expected.

A thorough inspection of your tractor and mower should be made at least once a year.

MAINTENANCE OF TRACTOR

TIRE PRESSURE

The tractor uses pneumatic tires on all four wheels. The 4.10 x 6-12 inch diameter front tire should be inflated from 12 to 16 lbs pressure. The 6.50x 8-16 inch diameter rear tire should be inflated from 7 to 10 lbs pressure.

ADJUSTMENTS

1. Adjustments required for the tractor are simple and infrequent. Spring loaded idlers on the tractor drive belt maintain proper tension for the belt so that adjustment is not normally required.

2. Adjust the brake band by tightening or loosening the lock nut on the rear of the brake rod.

3. Carburetor adjustments are covered in the engine manufacturer's instruction manual, which is furnished.

ENGINE

1. The maintenance instructions for your engine are furnished by the engine manufacturer. Read these instructions carefully.

2. Repair of the engine should be accomplished by one of the engine manufacturer's authorized service stations.

BELT REPLACEMENT

Prior to replacing any belts, de-energize the engine by removing the ignition wire from the spark plug.

1. To change the transmission drive belt, depress the clutch pedal and set the parking brake. Reach in under the hood from the right side (the side away from the exhaust pipe) and slip the belt off the engine drive pulley. (If more slack is required pull the idler arm away from the belt.) Reach under the tractor and pull the old belt away from the drive shaft pulley. Reverse the removal procedure for installing the new belts.

2. Always use replacement belts recommended by the manufacturer. These are specially constructed, heat and oil resistant belts, designed to give many hours of trouble free use. Belts marked "special" can NOT be satisfactorily substituted by standard fractional horsepower belts. Genuine factory belts will be stamped with the part number.

WINTERIZATION FOR STORAGE

1. When it is time to store the tractor and the attachments for the winter, clean them thoroughly of grass clippings, mud and dust. Wipe all lubrication points, clean and lubricate. Drain the gasoline from the fuel tank and the carburetor, to prevent formation of gummy deposits. Drain the oil from the engine crankcase and refill with clean oil. Drain and refill the transmission, using #90 gear lubricant. (Capacity approximately 2 pints.) (If you are going to use the tractor during the winter, it will be necessary each time to run the tractor and transmission for a few minutes without load, until the oil in the engine and the lubricant in the transmission have thinned out sufficiently so that there will be no damage done to the working parts of either assembly. Also check the engine manufacturer's recommendations for a winter weight oil.

2. When preparing the engine for winter storage put about one to two tablespoons of engine oil into the spark plug hole, after the spark plug has been removed, while turning the engine slowly by hand to allow the piston to distribute the oil evenly over the cylinder walls. Replace the spark plug with an old plug which will not be used again, or plug the hole with a cork. (This prevents fouling the good plug with the oil used to preserve the cylinder and piston.)

3. In the Spring remove the old spark plug or cork, flush the cylinder with about one quarter to one half cup of fresh gasoline and blow dry with compressed air. Reinsert the good spark plug, after being sure it is clean and properly gapped according to the engine manufacturer's instructions. Check the oil in the engine and transmission. Fill the fuel tank. The tractor is now ready again for operation.

USING YOUR MOWER

LEARN THE MOWER CONTROLS

1. Blade clutch control. The blade clutch control rod is located just behind the steering column and just forward of the tractor gear shift lever. With the knob of the blade clutch control in the rearmost position, the blade is engaged. With the knob in the forward position the blades are disengaged and the blade brake is applied.

2. Cutting Height Control. Cutting height is controlled by the control lever (figure 5) at the right of the steering column and provides for cutting heights of 1-1/2, 2, 2-1/2, 3, and 3-1/2 inches. Detent latches maintain the height selected and can be disengaged to change heights by pressing the thumb control button on the grip of the control lever.

THINK OF SAFETY BEFORE YOU MOW

The mower blades use considerable horsepower, therefore, the mowing attachment is a powerful cutting tool. Treat it with the respect you would treat a buzz saw. Before you use the mower, be sure you know the safety rules.

1. Never allow children or young teenagers to operate the mower without proper instructions. Keep children and pets away from area of the mower at all times while it is working.

2. Always keep hands and feet out from under the mower deck while the engine is running and until you are SURE that the blades have stopped turning after the engine is shut off or the blade clutch disengaged. They will coast for several seconds.

3. Before you start mowing, walk over the area you are going to cut and pick up all debris which could be picked up and thrown by the blades. Sticks, stones and pieces of metal are a hazard to the mower, and when chopped to bits by the heavy blades, can be dangerous to pets and people.

4. Know how to stop the mower and the engine instantly.

5. When moving the tractor along paths and walks, and at all times when not actually cutting, keep the blade clutch disengaged.

6. Don't attempt any service operations while the engine is running. Disconnect the spark plug wire to prevent accidental starting.

7. When mowing high grass or weeds, start with the mowing attachment at its highest position. This lessens the danger of striking hidden objects. Then take a second cut after first checking to be sure there are no obstructions.

8. Stop the engine and disengage the blade clutch whenever you leave the tractor.

PUT YOUR MOWER TO WORK

CHOOSE THE BEST CUTTING HEIGHT

1. In general, use the same cutting height you have used before. You know what height is best for your own lawn.

2. When first using your mower, cut the grass a little longer than you did before until you are sure that the greater cutting width will not cause scalping due to irregularities in the lawn.

3. If the grass is high, or if it contains lots of moisture, take a first cut with the blades set high. Then finish cutting with the lower blade setting. This gives better distribution of the clippings and provides a cleaner second cut.

4. It is possible, by using care, to cut grass that is extremely high or wet. Set the blades at their highest position, and use the lowest drive speed. Move into the area cautiously. Take a cut, if necessary, only half the width of the mower at each pass. Wet clippings may clog the mower housing, causing the blade to stall and the belts to slip and wear. If this happens it will be necessary to stop and clean the discharge. Be sure to stop the engine and disengage the blade clutch.

HOW TO SET THE CUTTING HEIGHT

1. The height of cut is very easily set or changed by using the handle provided as illustrated. The blades may be set at 1-1/2", 2", 2-1/2", 3" and 3-1/2".

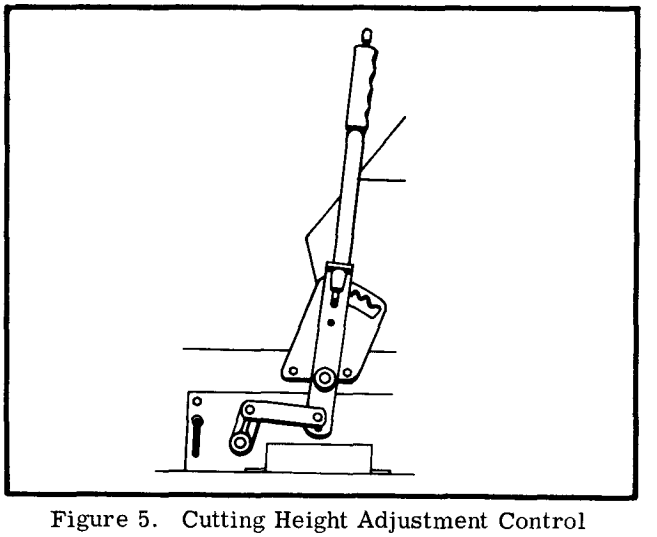

Figure 5. Cutting Height Adjustment Control

2. To raise the cutting attachment, press down on the hand lever with your thumb to release the pressure on the lever and pull back.

3. To lower the blades, place your right thumb on the top of the hand lever, release the pressure and the entire mower housing will drop slightly. You can now set the mowing height in the position that you want. Each time you move from one position to another in the lever engaging plate the blades raise or drop 1/2-inch.

4. It may be necessary to adjust the leveling wheels, which are a part of the mower attachment (See figure 1), when the cutting attachment is lowered to the 1-1/2 and 2-inch cutting positions to prevent scalping. The leveling wheels should be in the top hole of the wheel bracket at the 1-1/2 inch cutting height position and in the bottom hole when operating the mowing attachment at 2 inches.

USE THE RIGHT SPEED FOR MOWING

1. Use low gear for pulling heavy loads, for mowing in high grass and for mowing while climbing hills. This allows the blades to maintain constant RPM, and delivers most of the horsepower to the blades. Low gear also gives you maximum control while trimming.

2. Use second gear for mowing level areas and for climbing hills when you are not using the blades. If second gear results in uneven mowing due to the condition of the grass, shift to low gear.

3. High gear gives a speed of about six miles per hour on a level hard surface. Use it for transporting the tractor to and from work. Mowing in high gear will be uneven because at this speed the blades do not have time to lift each blade of grass into cutting position. In addition, so much of the engine's horsepower is absorbed in forward motion that it is comparatively easy to stall the blade.

4. Slow down on turns to avoid sliding sideways.

5. Reverse is just a little slower than second gear. The mower will cut equally well in either forward or reverse.

6. To avoid jerky starts, release the clutch pedal slowly after shifting.

SAVE MOWING TIME WITH PLANNING

1. Changing direction wastes time. Plan to keep the mower moving forward as much as possible.

2. Plan for longest straight runs possible.

3. Save close trimming for the cleanup.

4. Try to work with the clippings discharging on the already cut areas, to prevent build-up of clippings which could impose an extra load on the blade, or cause uneven mowing because they prevent the grass from rising into the cutting path of the blade.

5. In a small area, where tight turns would cause lost time in the center if the normal round and round methods were used, try the cutting method shown in the illustration. Make the second pass down the center of the area, rather than down the opposite side from the first pass. This allows you to swing wide at the end of each pass, and still cut all of the grass without too much reversing.

6. Try to avoid steep hills. The tractor will normally carry a 200 pound operator up a 30% grade while cutting grass.

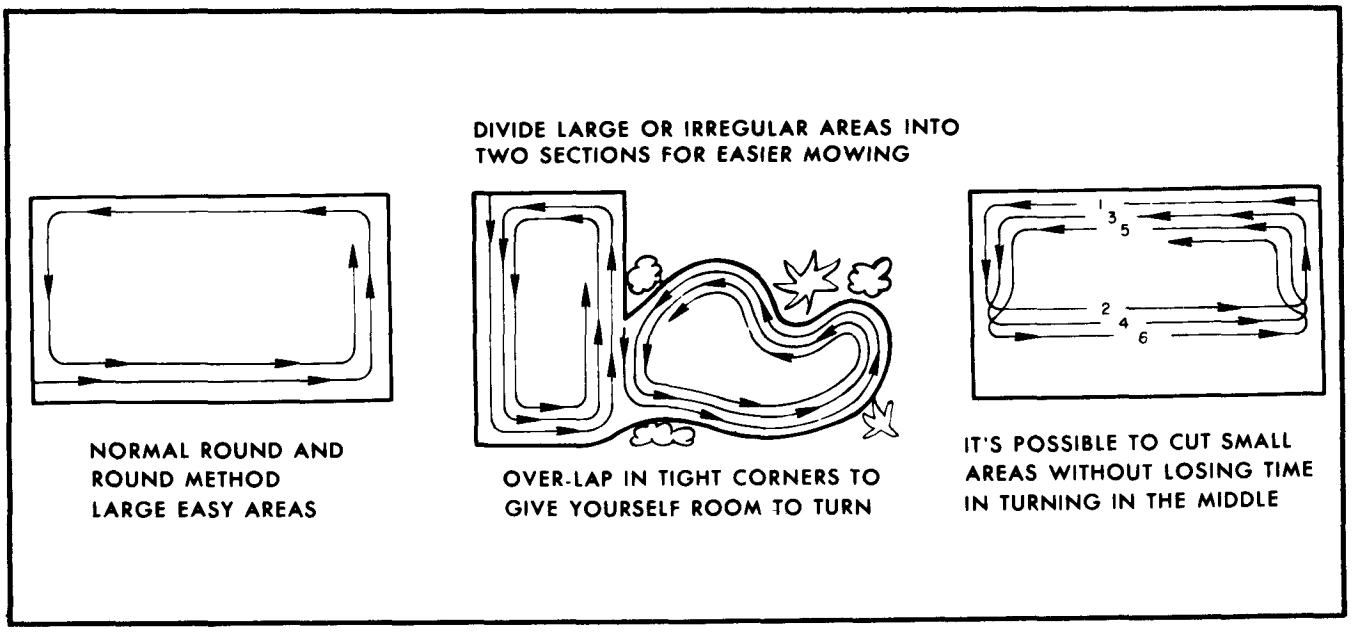

Figure 6. Grass Cutting Pattern

MOWING TIPS AND PRECAUTIONS

1. Keep the mower clean, especially around the blades. A buildup of grass clippings in the blade housing can impair the efficiency of the mower and cause uneven cutting.

2. It is possible, when using your 32-inch rotary mower attachment on the tractor, to develop an irregular cutting pattern if you operate the tractor using too fast a forward speed. Uneveness of cut portions of grass in the middle may be noticed if too fast a forward speed is used. That is why your tractor is equipped with a three forward speed transmission, so that you will have a selection of forward speeds to choose from, depending on your specific grass cutting job.

Best results are always obtained in first (slowest) speed.

3. The discharge opening of the 32-inch mower attachment has been constructed to allow for maximum discharge of grass cuttings under normal operating conditions. However, there may be circumstances where it will be necessary to aid the discharge ability of the mower.

These conditions can best be described as follows:

(a) When cutting high weeds.

(b) When cutting wet, lush grass.

(c) When attempting to cut high stand of heavy grass at too low a cut.

(d) When cutting grass in a clockwise direction throwing cut grass into uncut grass.

(e) When attempting to cut grass or weeds at too fast a forward speed.

(f) When running the engine at low RPM, thereby reducing the cutting speed of the dual rotary blades.

The best way to correct these situations is to:

(a) Cut high weeds in the 3-1/2 inch cutting position, use first forward speed, and stop occasionally to allow the discharge to clear itself.

(b) Cut wet lush grass in 3-inch or 3-1/2 inch cutting position once, and then lower deck to desired cutting height and recut.

(c) Cut high or heavy grass in two cuts as described in (b).

(d) Always mow grass so that the cuttings are discharged into the cut portion of the lawn.

(e) Reduce forward speed to minimum.

(f) Always use engine at maximum throttle setting after break-in period. If necessary have your dealer check engine RPM to make sure engine is operating properly.

(g) Do not operate the mower with the blades dull or out of balance.

MOWER INSTALLATION

CAUTION

Be sure the engine is stopped and the spark plug wire is removed before attempting to install the mower attachment.

1. Place the transmission in neutral, disengage the clutch and set the parking brake. Place the blade clutch in the disengage position.

2. Remove the belt guides (79, figure 11) from their brackets by removing the nuts and lock washers.

3. Place the mower drive belt over the mower drive pulley and slide the mower attachment under the tractor with the discharge opening to the drivers right.

4. Lift one side of the mower attachment and slip the mower brackets over the pins in the side of the chassis. The pins should be fitted in the upper round holes at the outside edges of the bracket. See figure 10. Install the hairpin cotter pins (46, figure 10) in the holes provided in the chassis pins. Repeat for the other side of the mower attachment.

5. Lead the belt under the right and left small pulleys and re-install the belt guard pins.

6. Lead the belt up between the pulley on the front of the drive shaft and the chassis. Pull the transmission idler arm away from the transmission drive belt to permit the mower drive belt to pass and slip the mower drive belt over the mower drive pulley on the engine drive shaft.

7. Make certain that the mower drive belt has no twists.

8. Put the end of the blade clutch and brake rod in the lower hole of the idler arm assembly (83, figure 11) and fasten with a hairpin type cotter pin.

9. Place the lift link (3, figure 14) on either side of the lower handle (16, figure 11). Fasten the lift links to the lower handle through the upper of the two lower holes with pin (47, figure 10) and a hairpin cotter pin.

MOWER REMOVAL

The mower deck may be removed by reversing the installation procedure.

MULCHER SCREEN

A mulcher screen can be attached over the discharge of the mower deck. With this screen installed, you can ride over your lawn and dispose of dried fallen leaves without effort. The mower blade lifts them up, grinds them into pieces small enough to pass through the holes in the screen, and returns them to your lawn as a fine organic mulch.

To install the mulcher screen, stop the engine, remove the spark plug wire, disengage the blade clutch and then remove the shrub bar from the discharge

opening of the mower. Shape the screen to the inside of the blade housing. Attach to the same holes, using the bolts furnished with the mulcher screen.

Better mulching action will result if you set your blade at one of the lowest cutting heights. Be sure the leaves are dry before attempting to use the mulching attachment. Wet leaves will not be ground up finely enough to pass through the screen and will soon clog it.

CAUTION

Be sure the engine is shut off, the spark plug wire removed, and the blade clutch is disengaged before you attempt to clean a clogged mulcher screen.

MOWER MAINTENANCE

BLADES

It is important that the blades be kept razor sharp and in balance. Dull blades waste power, and do a poor grass cutting job. Blades which are out of balance are dangerous due to the high speed of rotation and cause excessive vibration on the bearings. When sharpening blades, always take equal amounts of metal off both cutting edges. Replace blades which show any signs of cracks or crystallization, to prevent their disintegration at high rotating speeds. When sharpening blades, grind out all nicks to prevent them from becoming cracks.

Inexpensive blade balancers are available to assure that blades are in balance after sharpening. In case sharpening results in an out of balance blade, grind some more metal off the heavy end. Remove and replace the blades as described under "Removal and Replacement of Parts."

REMOVAL AND REPLACEMENT OF PARTS

CAUTION

Before performing any service operations on the mower be sure to disconnect the spark plug wire to prevent accidental starting of the engine.

BLADES

The mowing attachment uses two blades. It will be necessary to block the rear of the tractor up and disengage the blade clutch to apply the brake to the blade drive spindle. Insert a drift pin or other blocking device into the hole in the mower deck belt housing, adjacent to each of the blades, to prevent the blades from turning. The hole should be lined up with the hole in the blade spindle pulley so that the spindle will not turn while loosening the blade nuts. See Figure 7.

Remove the blades by taking off the right hand threaded spindle nuts. Note the positions of the large and small flat washers, as these must be replaced in the same positions when the blade is reinstalled. See Figure 8.

Be sure the blades are installed right side up. Use the blocking pins to prevent the blades turning when retightening the spindle nuts.

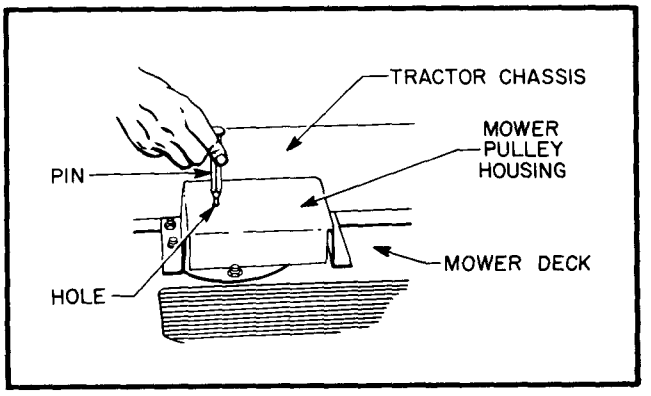

Figure 7. Locking Plate Pulley To Loosen Plate Nut

BLADE BELTS

Remove the mower attachment by reversing the installation instructions on page 10. Stop the engine, remove the spark plug wire and disengage the blade clutch before attempting to remove the mower attachment.

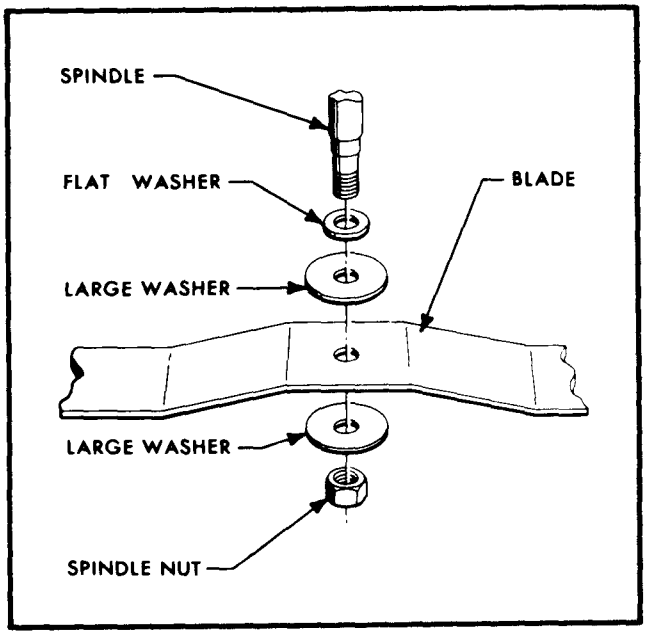

Figure 8. Assembly of Blades

Remove the mower drive pulley (#1 Fig 9) and the pulley covers from the left and right blade drive pulleys When removing the center pulley support (#2)do not remove the bearing housing (#62 Fig. 14) Unhook the springs from the idlers. Spring the belts off the outside pulleys first and then remove them from the center pulley. Replace in the reverse order. Be sure to hook the springs into the idler arms. Replace the pulley covers after the belts have been installed.

MOWER DRIVE BELT

To remove the mower drive belt, remove the belt guides at the left and right pulleys. (79, figure 11.)

Place the blade clutch control in neutral. Set the parking brake. Remove the belt from the engine drive pulley, pull back the transmission drive belt idler pulley to allow the mower belt to pass and drop the belt out through the bottom of the chassis. If more slack is required, unhook the spring from the mower belt idler pulley arm. Place the cutting height control in the 1-1/2" position, reach under the tractor and remove the belt from the driven pulley on the mower deck. Install a new mower drive belt by reversing the removal procedure. Be sure the new belt passes under the left and right pulleys without twists. Be sure to replace the belt guides and the idler arm spring.

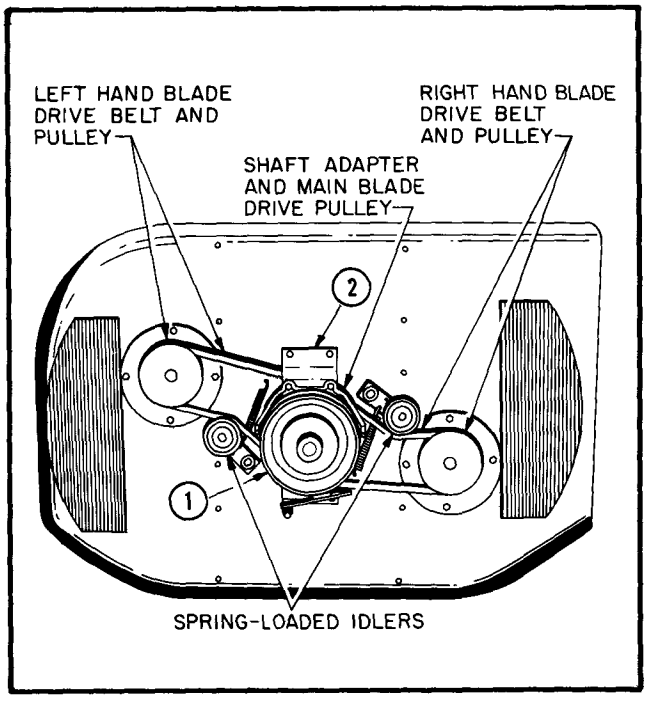

Figure 9. Mower Belt Installation

ATTACHMENTS INCREASE YOUR TRACTORS' USEFULLNESS

SNOW REMOVAL ATTACHMENTS

A Snow Blade has been made available. It assembles to the front of the tractor and is raised and lowered with a hand lift lever. The Snow Blade can also be utilized for light grading chores.

OTHER ATTACHMENTS

Your tractor can be used to pull a lawn roller, aerator, seeder or dump cart, all of which are available from your dealer. They attach to the hitch plate at the rear of the tractor. You may also use the tractor to pull a gang mower of three 21-inch reel mowers. Used in this way, your tractor and mower will cut a 5-foot swath.

MOWER WINTER STORAGE

When storing the mower and tractor for the winter, remove the mower deck from the tractor and clean thoroughly. Remove all caked grass and clippings from the underside of the mower. Scrape all rust spots to bare metal and coat with a good grade of primer paint. Oil the pulley bearings and coat all exposed metal surfaces with a light coat of oil.

ADDITIONAL INSTRUCTIONS FOR TRACTORS WITH ELECTRICAL SYSTEMS

GETTING YOUR TRACTOR READY FOR WORK

In addition to the instructions on page 3, it will be necessary for you to install the battery before you begin operations. First, activate the battery by adding the electrolyte according to the instructions which accompany the battery. Always add the electrolyte to the battery before the battery is installed in the tractor. This will help in handling the corrosive acid, which makes up the electrolyte, and prevent spilling of the acid on the metal parts of the tractor. Refer to the exploded view, figure 10A. Open the grille and swing it up to permit access to the battery (4) in the battery support (1) with the battery terminals toward the front of the tractor. Use the bolts (14) and the holddown clamp (15) provided and secure the battery in the carrier. Be sure that the holddown clamp is not pressing on the filler plugs or touching the battery terminals. The rubber ends of the holddown clamp should grip the edges of the battery snugly. Tighten the bolts sufficiently to hold the battery in place but do not overtighten. Attach the ground wire (13), which is attached to the engine base, to the negative terminal of the battery with the hardware supplied (9, 10, 11 and 12), coat the terminal and hardware with petroleum jelly to prevent corrosion and slip the terminal boot (8) over the terminal. Attach the positive cable, which is attached to the solenoid (30), with hardware (2, 3, 5 and 6), coat with petroleum jelly and slip the terminal boot (8) over the terminal. Return the grille to its normal position and press in until grille latch closes.

LEARNING THE CONTROLS

The controls for electrically equipped tractors are the same as the controls covered on page 4 except for the throttle, ignition switch, and starter.

1. Throttle. The throttle controls the engine speed and is in the idle or slowest speed when all the way to the rear (closest to the operator). In the most forward position the engine is in "wide open" or high speed position.

2. Ignition Switch. The ignition switch is a three position switch. The three positions are marked on the control panel as "OFF", "RUN" and "START". In the "OFF" position the switch grounds the ignition and prevents the engine from running. It is spring loaded so that it must be held in the "START" position, and will automatically return to the "RUN" position when released.

3. Starter. The ignition switch actuates the starter when held in the "START" position.

4. The engine is equipped with a rope starter as an auxiliary starting means.

SAFETY REMINDER

Always remove the ignition key from the lock, disconnect the spark plug wire and remove one battery cable whenever working around the engine or mower blades.

When lubricating underside of chassis in accordance with instructions on page 5, remove battery before tipping tractor in its side.

HOW TO START THE ENGINE

Repeat steps 1 through 4 of the starting procedure on page 4 and then simply turn the ignition switch to the "START" position and hold until the engine starts. When the engine starts, release the switch and it will automatically return to the "ON" position. Should the engine not start in the first thirty seconds because it is cold, or if it is a new engine, return the switch to the "OFF" position and wait for one full minute. Because of the excessive current consumption of most starting motors, operation for a period of more then thirty seconds may very well cause damage to the windings in the motor. After a one minute wait, try again.

HOW TO STOP THE ENGINE

1. Pull the throttle back to the idle position and turn the ignition switch to "OFF". Do not race the engine just prior to stopping and then throw the throttle wide open after the ignition has been turned off. This practice is similar to using the choke to stop the engine and sometimes facilitates re-starting, but it also gives the cyclinder wall and the rings a bath in raw gasoline and removes the lubricating oil from the cyclinder. This practice will materially shorten the life of the engine. See the instructions for stopping the engine on page 4.

ELECTRICAL SYSTEM MAINTENANCE

1. Starting and Charging System. Maintenance instructions for the starter-generator will be found in the engine manual furnished by the engine manufacturer.

2. Under normal conditions, one hour of engine operation per week will keep the battery charged. Under extremely high temperatures two hours of operation may be necessary.

BATTERY

1. Battery water level must be properly maintained and the top of the battery must be kept clean. (If battery is in a very hot place between periods of engine operation it will run down more rapidly than if stored in a cool location.)

2. Check electrolyte level every 25 operating hours.

3. Maintain level with distilled or de-mineralized water. Avoid over filling.

4. Keep top of battery clean by periodically washing with a brush dipped in ammonia or bicarbonate of soda. Follow by flushing with clean water.

5. Battery cables must be tight on terminals to provide a good contact.

6. If corrosion occurs at terminals, disconnect cables and scrape clamps and terminals separately. Re-install the terminals and coat with petroleum jelly.

WINTER STORAGE

The simplest instructions for the storage of a battery between seasons are that it be charged, and stored in a cool place, but not where it will be subjected to sub-zero temperatures. Storage at temperatures between 20° and 50° is ideal. After prolonged storage of the tractor, it may be necessary to have the battery charged at the beginning of the season, or to start the engine with the auxiliary rope starter for the first few times until the battery is recharged by the generator.

ELECTRICAL GROUP

(USED ONLY ON MODEL 55100)

Ref. No.	Part No.	Description	Qty.
1	7-1010	Battery Support	1
2	322-3	Cap Screw	6
3	3253-4	Lockwasher	7
4	239-13	Battery	1
5	7-0024	Flat Washer	1
6	3217-6	Nut	1
7	7-0322	Black Wire	1
8	218-331(s)	Terminal Boot	2
9	321-4	Cap Screw	4
10	3256-16	Flat Washer	3
11	3253-3	Lockwasher	1
12	3217-5	Nut	1
13	7-1013	Black Wire	1
14	7-0307	Battery Bolt	2
15	7-0534	Battery Clamp	1
16	7-1002	Starter-Generator	1
17	32152-1(s)	Conelok Nut	3
18	7-0987	Generator Bracket	1

Ref. No.	Part No.	Description	Qty.
19	322-11	Cap Screw	2
20	218-334	Voltage Regulator	1
21	322-6	Cap Screw	1
22	322-5	Cap Screw	2
23	32152-4(s)	Conelok Nut	5
24	7-0657	Belt 3V 320	1
25	7-1001	Belt Guard	1
26	7-1000	Clip	1
27	218-340(s)	Pulley	1
		Woodruff Key (W/Gen.)	1
28	3256-3	Flat Washer	1
29	7-0998	Adjusting Arm	1
30	218-332(s)	Solenoid	1
31	321-2	Cap Screw	2
32	7-0323	Red Wire	1
33	7-0326	Red Wire	3
34	7-1012	Yellow Wire	1
35	7-1011	Blue Wire	2
36	218-333(s)	Starter Switch	1

ELECTRICAL GROUP

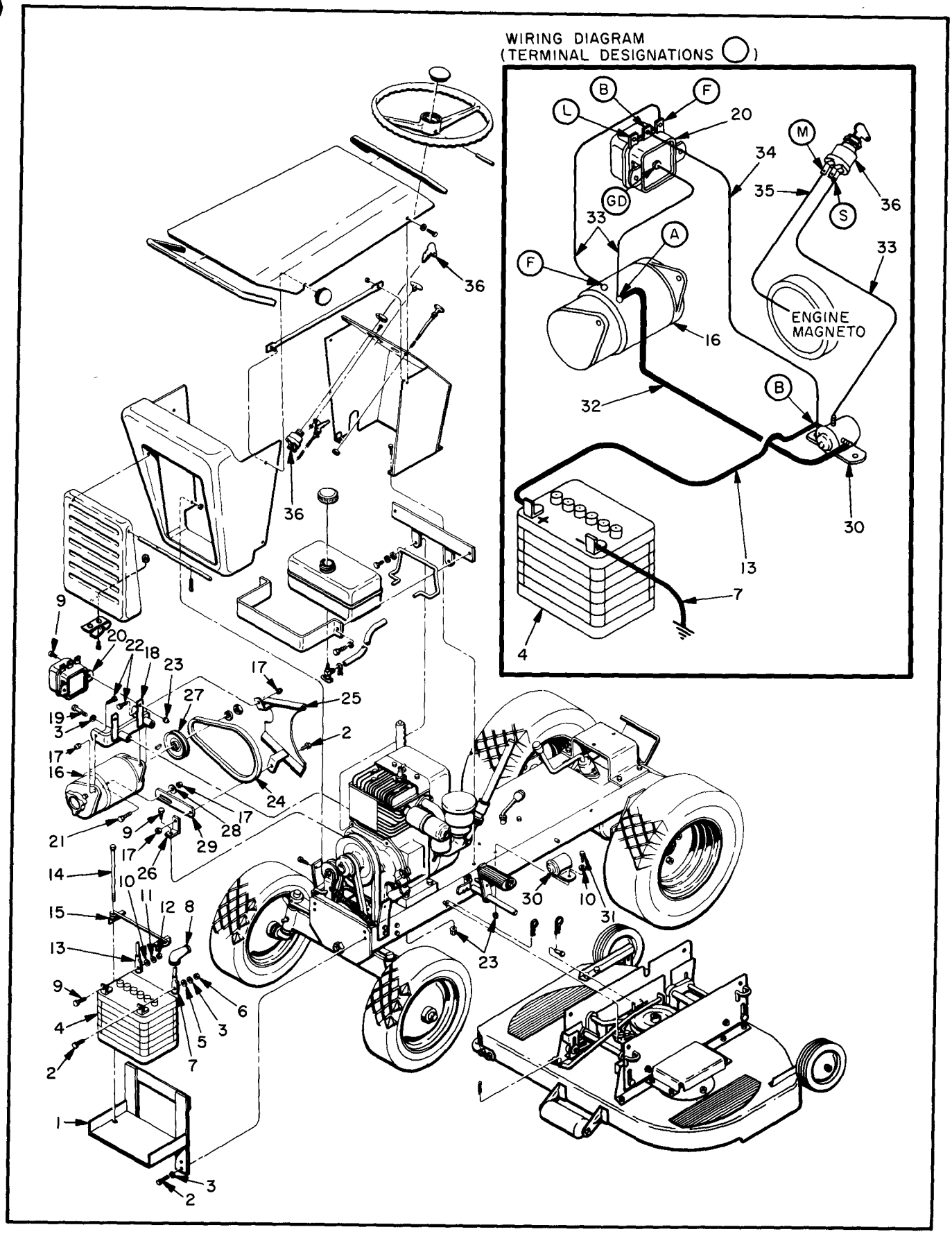

Figure 10A. Electrical Group

HOOD AND FENDER GROUP

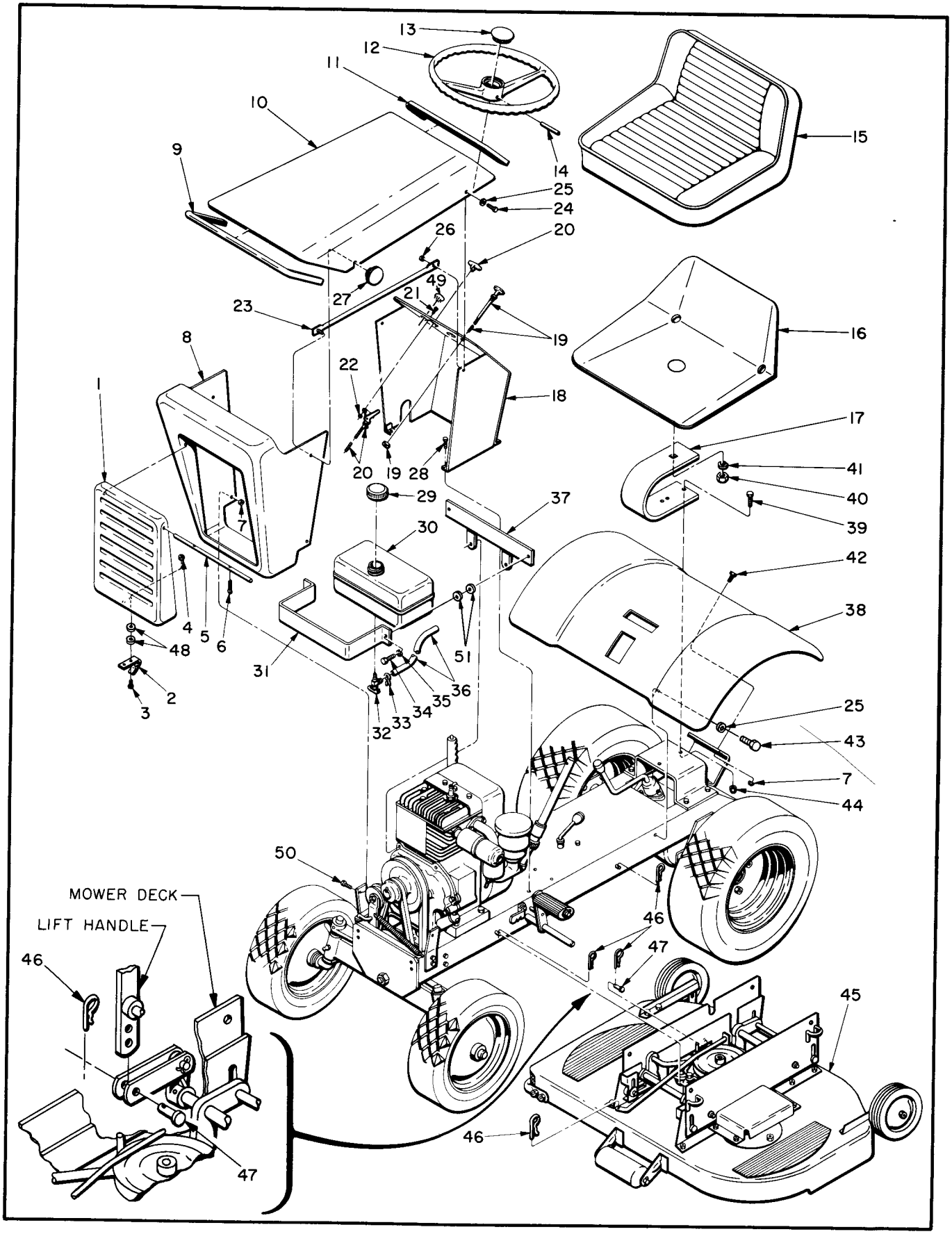

Figure 10. Hood and Fender Group

HOOD AND FENDER GROUP

Ref. No.	Part No.	Description	Qty.
1	7-0221	Hood Grille	1
2	7-0223	Spring Clip	1
3	3291-5	Round Head Screw	2
4	3219-14	NF Nut	2
5	7-0222	Rod	1
6	3272-7	Cotter Pin	2
7	32152-1(s)	Conelok Nut	4
8	7-0907	Front Hood	1
9	7-0908	Grommet, Hood	1
10	7-0916	Hood	1
11	7-0917	Grommet	1
12	7-0470	Steering Wheel	1
13	7-0921	Cap	1
14	32121-78(s)	Roll Pin	1
15	7-0931	Seat Pad	1
16	7-0930	Seat	1
17	7-0918	Seat Spring	1
18	7-0912	Rear Hood Support Assy.	1
19	7-0914	Choke Control	1
20	7-0913	Throttle Control	1
21	32122-43	Cross Recess Screw	2
22	32149-6	Lock Nut	2
23	7-0915	Hood Brace	2
24	321-6	Cap Screw	2
25	7-0152	Flat Washer	6

Ref. No.	Part No.	Description	Qty.
26	32152-4(s)	Conelok Nut	2
27	233-19(s)	Knob	2
28	32140-10	Sems Screw	3
29	222-16(s)	Gas Tank Cap	1
30	7-0902	Gas Tank	1
31	7-0904	Clamp	1
32	304-88	Shut-off Valve	1
33	2412-20	Clamp Hose	2
34	322-4	Cap Screw	2
35	3253-4	Lockwasher	2
36	7-0897	Gas Hose	1
37	7-0903	Gas Tank Clamp	1
38	7-0922	Rear Fender Assembly	1
39	323-6	Cap Screw	2
40	3218-5	Nut	1
41	3253-7	Lockwasher	1
42	322-2	Cap Screw	1
43	321-2	Cap Screw	2
44	32152-2(s)	Conelok Nut	2
45	7-0935	32" Mower Deck Assy.	1
46	3290-255	Hairpin Cotter Pin	7
47	7-0511	Pin	1
48	3256-16	Flat Washer	2
49	2410-24(s)	Plug Button	1
50	7-0305	Leveler Head Bolt	2
51	7-2121	Rubber Washer	4

ENGINE AND CHASSIS GROUP

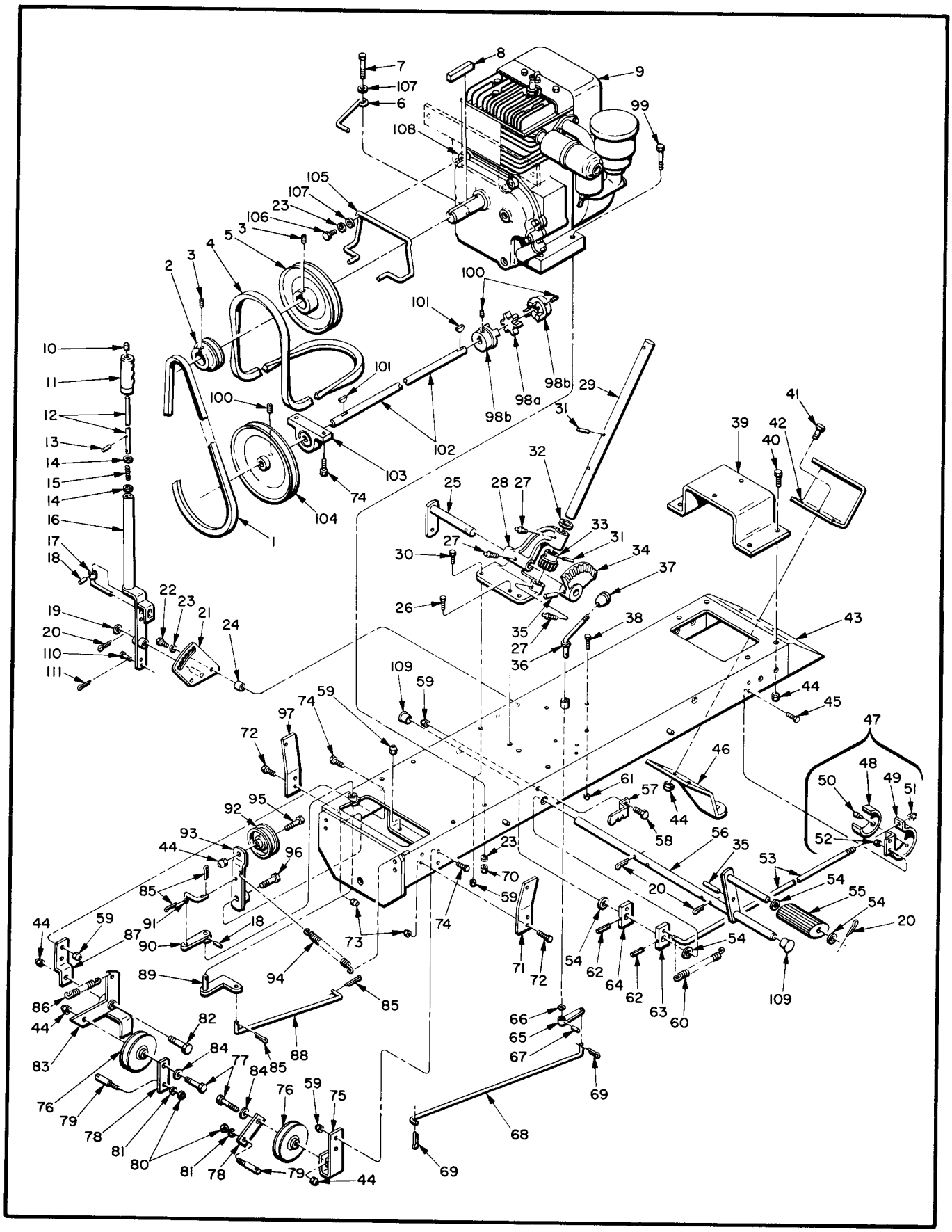

Figure 11. Engine and Chassis Group

ENGINE AND CHASSIS GROUP

Ref. No.	Part No.	Description	Qty.
1	7-0824	Belt	1
2	7-0895	Engine Pulley	1
3	3242-2	Set Screw	3
4	7-0957	Belt	1
5	7-0901	Engine Pulley	1
6	7-0934	Belt Guide	1
7	322-11	Cap Screw	1
8	7-0238	Square Key	1
9	221-283(s)	Engine B/S, 7HP	1
10	7-0508	Lift Rod Cap	1
11	7-0510	Handle Grip	1
12	7-0515	Lift Rod	1
13	32121-73	Roll Pin	1
14	7-0052	Flat Washer	2
15	7-0514	Compression Spring	1
16	7-0513	Lower Handle	1
17	7-0516	Lift Lock Assembly	1
18	32121-50	Roll Pin	3
19	7-0131	Flat Washer	1
20	3272-11	Cotter Pin	2
21	7-0512	Quadrant Assembly	1
22	322-6	Cap Screw	2
23	3253-4	Lockwasher	8
24	7-0581	Spacer	2
25	7-0863	Steering Shaft Assy	1
26	322-5	Cap Screw	2
27	302-34	Grease Fitting	3
28	7-0862	Steering Support	1
29	7-0826	Steering Post	1
30	322-6	Screw	1
31	32121-9	Roll Pin	2
32	7-0126	Flat Washer	1
33	7-0468	Steering Pinion	1
34	7-0410	Steering Gear	1
35	32121-78(s)	Roll Pin	2
36	7-0138	Rod Assembly, Blade Control	1
37	233-18	Knob	1
38	7-0153	Stud Screw	1
39	7-0828	Seat Bracket	1
40	323-6	Cap Screw	4
41	323-7	Cap Screw	3
42	7-0830	Fender Support	1
43	7-0827	Chassis Assembly	1
44	32152-2(s)	Conelok Nut	10
45	321-3	Cap Screw	2
46	7-0157	Hitch	1
47	7-0816	Brake Liner Assembly	1
48	7-0892	Brake Liner	1
49	7-0893	Brake Band	1
50	3290-287	Rivet	1
51	32152-1(s)	Conelok	1
52	32152-4(s)	Conelok Nut	1
53	7-0817	Brake Rod	1
54	7-0130	Flat Washer	4
55	7-0128	Foot Pedal	1
56	7-0835	Foot Rod Assembly	1

Ref. No.	Part No.	Description	Qty.
57	7-0164	Brake Strap	1
58	7-0163	Shoulder Bolt	1
59	32152-1(s)	Conelok Nut	11
60	7-0818	Spring	2
61	3296-39	Nut	1
62	32121-77(s)	Roll Pin	2
63	7-0837	Bracket	1
64	7-0836	Bracket	1
65	7-0834	Lever	1
66	3290-212	Wave Washer	1
67	32121-74(s)	Shear Proof Pin	1
68	7-0848	Idler Rod	1
69	3272-7	Cotter Pin	7
70	32152-1(s)	Nut	4
71	7-0911	Grill Brace, Left Hand	1
72	321-3	Cap Screw	4
73	32152-4(s)	Conelok Nut	4
74	322-3	Cap Screw	6
75	7-0843	Idler Support	1
76	7-0823	Idler Pulley	2
77	323-9	Cap Screw	2
78	7-0822	Bracket, Belt Guide	2
79	7-0347	Belt Guide	2
80	3217-5	Nut	2
81	3253-3	Lockwasher	2
82	7-0846	Shoulder Bolt	1
83	7-0845	Idler Arm Assembly	1
84	3256-4	Washer	2
85	3272-5	Cotter Pin	4
86	7-0847	Spring	1
87	7-0844	Bracket	1
88	7-0840	Clutch Rod	1
89	7-0838	Clutch Lever	1
90	7-0834	Lever	1
91	7-0842	Control Rod	1
92	7-0136	Idler Pulley	1
93	7-0841	Idler Arm Assembly	1
94	7-0141	Spring	1
95	323-8	Cap Screw	1
96	7-0135	Shoulder Bolt	1
97	7-0910	Grill Brace, R. H.	1
98	7-0888	Coupling (Consists of)	1
		a. Cushion (Black)	1
		b. Couplers	2
99	322-9	Cap Screw	3
100	3245-7	Set Screw	2
101	3257-32	Woodruff Key #61	2
102	7-0820	Shaft	1
103	251-211(s)	Pillow Block Bearing	1
104	7-0821	Pulley	1
105	7-0898	Belt Guide	1
106	322-11	Cap Screw	2
107	3256-3	Flat Washer	2
108	7-0900	Spacer	2
109	7-0923	Foot Stop	2
110	7-0511	Clevis Pin	1
111	3290-255	Hair Pin	1

WHEEL AND AXLE ASSEMBLY

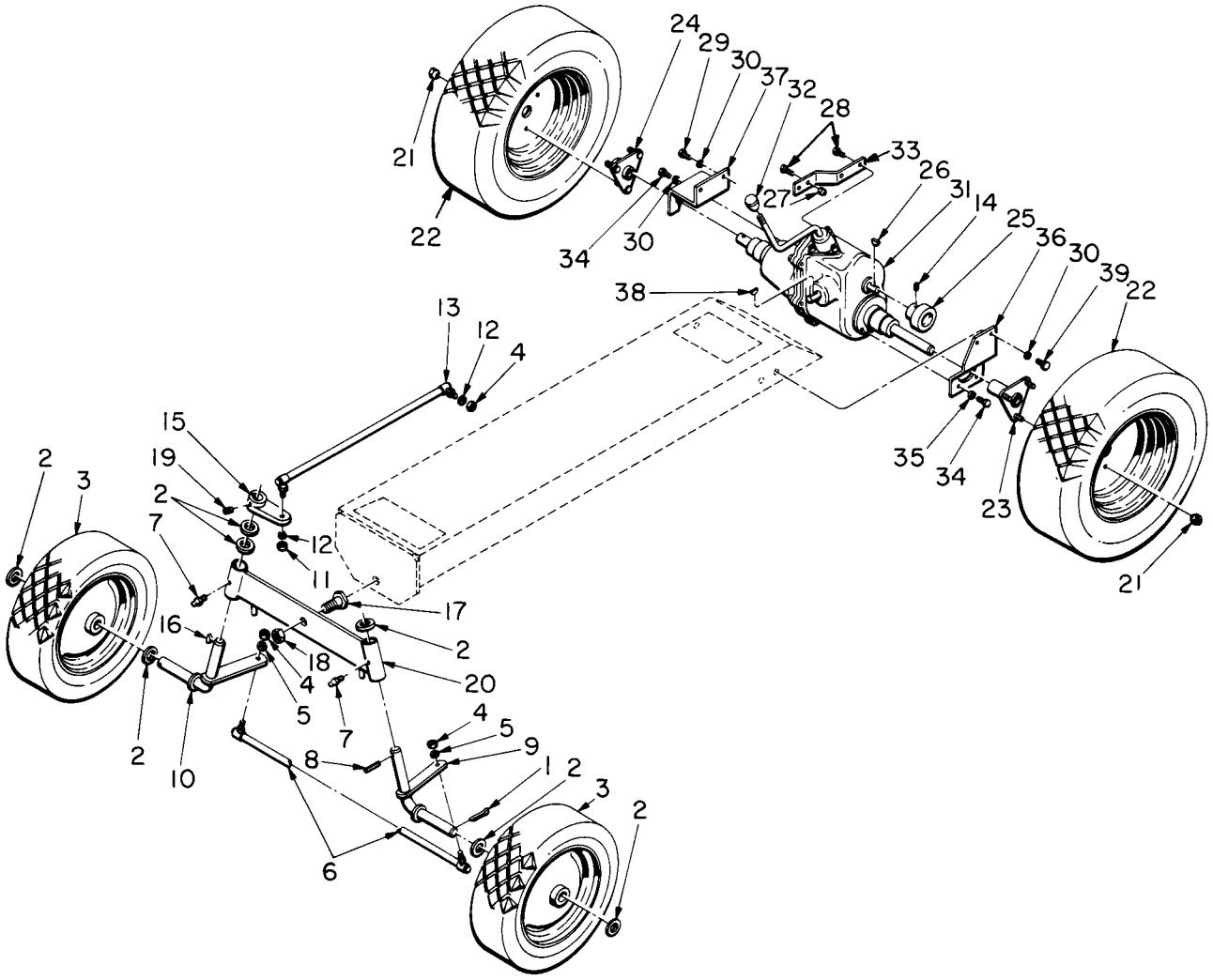

Figure 12. Wheel and Axle Assembly

WHEEL AND AXLE ASSEMBLY

Ref. No.	Part No.	Description	Qty.
1	3272-23	Cotter Pin	2
2	3256-28	Washer Flat	7
3	241-89(s)	Wheel Assembly (front) ... (Consists Of)	
	217-68(s)	a. Wheel	2
	231-45(s)	b. Tire 4. 10 x 6-12" diameter	2
	232-26(s)	c. Tube 4. 10 x 6	2
	256-175(s)	d. Bearing (2 per wheel)	4
4	3219-3	Nut	3
5	3253-21	Lockwasher	2
6	7-0854	Tie Rod	1
7	302-43	Grease Fitting	2
8	32121-15	Pin, Roll	1
9	7-0852	Axle Assy, L. H	1
10	7-0853	Axle Assy, R. H	1
11	3220-3	Nut	2
12	3253-21	Lockwasher	2
13	7-0825	Steering Rod	1
14	3245-7	Set Screw	2
15	7-0418	Lever, Steering	1
16	3257-23	Key	1
17	7-0851	Bolt, Leveler	1
18	32152-6(s)	Conelok Nut	1
19	3242-2	Set Screw	1
20	7-0850	Wheel Support	1

Ref. No.	Part No.	Description	Qty.
21	242-32	Nut Tapered	6
22	241-90(s)	Wheel Assembly (rear).... (Consists of)	
	217-69(s)	a. Wheel	2
	231-39(s)	b. Terra Tire 6.50 x 8-16" dia.	2
23	217-67(s)	Hub, Wheel L. H.	1
24	217-66(s)	Hub, Wheel R. H.	1
25	7-0887	Brake Drum	1
26	3257-56	Woodruff Key	1
27	32152-1(s)	Conelok Nut	2
28	322-3	Cap Screw	4
29	322-2	Cap Screw	4
30	3253-4	Lockwasher	4
31	7-0886	Transmission (transaxle)..	1
32	233-18	Knob	1
33	7-0890	Bracket, Transmission ...	1
34	322-6	Cap Screw	2
35	3253-4	Washer	4
36	7-0832	Axle Support, L. H.	1
37	7-0833	Axle Support, R. H.	1
38	3257-32	Woodruff Key	1
39	322-1	Screw	2

TRANSMISSION

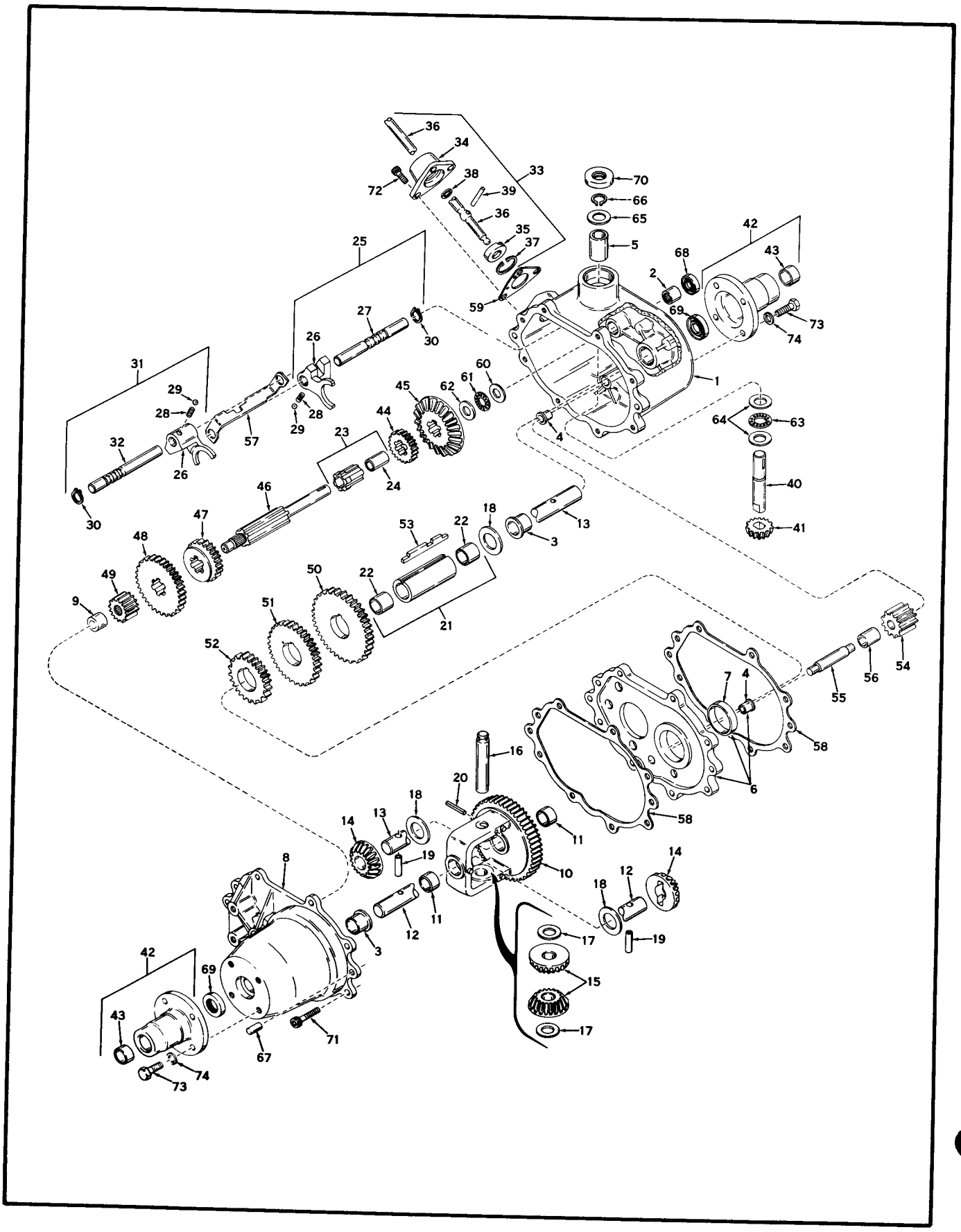

Figure 13. Transmission

TRANSMISSION

Ref. No.	Part. No.	Description	Qty.
1	2119-394(s)	Transaxle Case Assy (Incl. Nos. 2 thru 5)	1
2	2119-395(s)	Needle Bearing	1
3	2119-396(s)	Bronze Bearing	2
4	2119-397(s)	Bronze Bearing	2
5	2119-398(s)	Bronze Bearing	1
6	2119-399(s)	Center Plate Assy (Incl.) Nos. 4 and 7	1
7	2119-400(s)	Bronze Bearing	1
8	2119-401(s)	Transaxle Cover Assy (Incl. Nos. 3 and 9)	1
9	2119-402(s)	Needle Bearing	1
10	2119-403(s)	Differential Gear Assy (Incl. No. 11)	1
11	2119-404(s)	Bronze Bearing	2
12	2119-405(s)	Left Hand Axle	1
13	2119-406(s)	Right Hand Axle	1
14	2119-407(s)	Bevel Gear	2
15	2119-408(s)	Bevel Pinion	2
16	2119-409(s)	Drive Pin	1
17	2119-410(s)	Thrust Washer	2
18	2119-210	Thrust Washer	3
19	2119-411(s)	Roll Pin	2
20	32121-6	Roll Pin	3
21			
20	32121-6	Roll Pin	3
21	2119-412(s)	Countershaft Sleeve Assy (Incl. No. 22)	1
22	2119-413(s)	Bronze Bearing	2
23	2119-414(s)	Idler Shaft Assy (Incl. No. 24)	1
24	2119-415(s)	Bronze Bearing	1
25	2119-416(s)	Shift Rod Assy (1st and Rev.) (Incl. Nos. 26 thru 30)	1
26	2119-183	Shift Fork	2
27	2119-417(s)	Shift Rod	1
28	2119-182	Spring	2
29	255-1	Steel Ball	2
30	2119-233	Snap Ring	1
31	2119-418(s)	Shift Rod Assy (2nd and 3rd.) (Incl. No. 26, 28, 29, 30, and 32)	1
32	2119-419(s)	Shift Rod	1
33	2119-420(s)	Shift Lever and Housing Assy (Incl. Nos. 34 thru 39)	1
34	2119-421(s)	Shift Lever Housing	1
35	2119-422(s)	Shift Lever Keeper	1
36	2119-423(s)	Shift Lever	1
37	2119-229	Snap Ring	1

Ref. No.	Part No.	Description	Qty.
38	237-18	Quad Ring	1
39	32121-6	Roll Pin	1
40	2119-424(s)	Input Shaft	1
41	2119-425(s)	Input Pinion	1
42	2119-426(s)	Housing Assy Axle (Incl. No. 43)	2
43	2119-413(s)	Bronze Bushing	2
44	2119-209	Gear (10 teeth)	1
45	2119-428(s)	Bevel Gear (33 Teeth)	1
46	2119-429(s)	Shifter and Brake Shaft	1
47	2119-430(s)	Shifting Gear (2nd and 3rd)	1
48	2119-431(s)	Shifting Gear (1st and Rev)	1
49	2119-432(s)	Spur Gear (12 teeth)	1
50	2119-433(s)	Countershaft Drive Gear (39 teeth)	1
51	2119-434(s)	Countershaft Gear (34 teeth)	1
52	2119-435(s)	Countershaft Gear (25 teeth)	1
53	2119-436(s)	Countershaft Key	1
54	2119-437(s)	Reverse Idler	1
55	2119-438(s)	Reverse Idler Shaft	1
56	2119-439(s)	Reverse Idler Spacer	1
57	2119-440(s)	Shifter Stop	1
58	2119-441(s)	Case and Cover Gasket	2
59	2119-338(s)	Shift Lever Housing Gasket	1
60	2119-442(s)	Thrust Washer	1
61	2119-443(s)	Thrust Bearing	1
62	2119-444(s)	Thrust Washer	1
63	2119-445(s)	Thrust Bearing	1
64	2119-446(s)	Thrust Washer	2
65	2119-447(s)	Thrust Washer	1
66	32120-64	Snap Ring	1
67	2119-239	Dowel Pin	2
68	2119-448(s)	Oil Seal	1
69	2119-356(s)	Oil Seal	2
70	2119-449(s)	Oil Seal	1
71	3274-30	Socket Hd. Cap Screw	8
72	3274-8	Socket Hd. Cap Screw	3
73	322-5	Hex Hd. Screw	8
74	3253-4	Lockwasher	8
75	281-7	Pipe Plug	1

MOWER HOUSING ASSEMBLY, 32

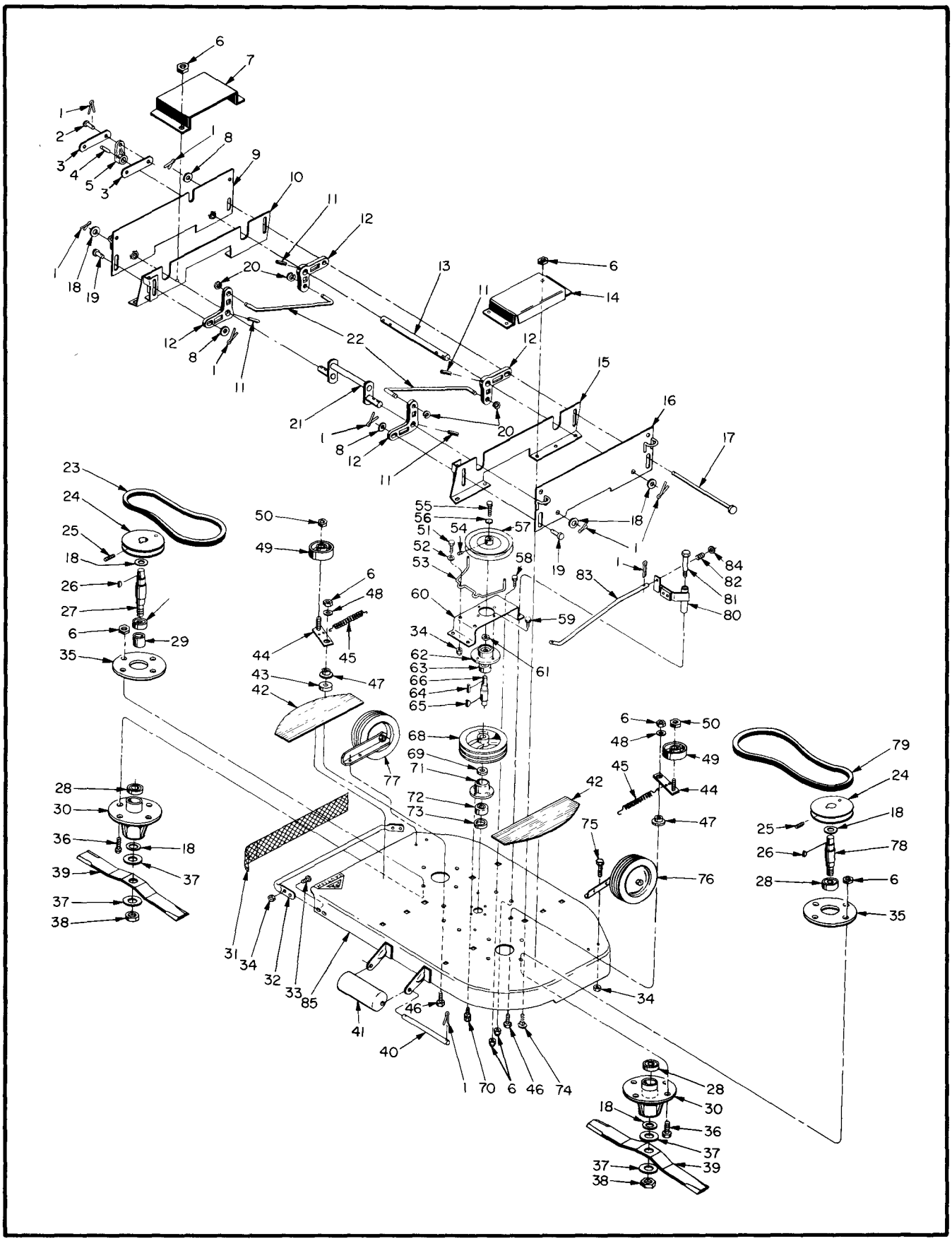

Figure 14. Mower Housing Assembly, 32"

MOWER HOUSING ASSEMBLY, 32

Ref. No.	Part No.	Description	Qty.
1	3272-7	Cotter Pin	9
2	7-0511	Pin	2
3	7-0956	Lift Link	2
4	32121-75	Roll Pin	1
5	7-0612	Lever	1
6	32152-1(s)	Conelok Nut	24
7	7-0943	Pulley Cover, R. H	1
8	7-0052	Flat Washer	3
9	7-0951	Mower Bracket, R. H	1
10	7-0948	Lower Bracket, R. H	1
11	32121-71	Roll Pin	4
12	7-0265	Bell Crank	4
13	7-0953	Pivot Shaft, Rear	1
14	7-0942	Pulley Cover, L. H	1
15	7-0947	Lower Bracket, L. H	1
16	7-0950	Mower Bracket, L. H	1
17	7-0270	Lift Shaft	1
18	7-0131	Flat Washer	9
19	7-0271	Lift Pin	2
20	32120-35	Snap Ring	4
21	7-0952	Lift Shaft, Front	1
22	7-0268	Lift Link	2
23	7-0946	Belt, Right Hand	1
24	7-0941	Pulley	2
25	3242-13	Set Screw	2
26	3257-3	Woodruff Key	2
27	7-0965	Blade Shaft	1
28	251-5	Bearing	4
29	7-0577	Spacer	1
30	7-0963	Spindle Housing	2
31	7-0936	Mulcher	1
32	7-0954	Blade Guard	1
33	3229-11	Carriage Bolt	4
34	32152-1(s)	Conelok Nut	8
35	7-0252	Washer	2
36	322-4	Screw	8
37	7-0253	Flat Washer	4
38	32152-6(s)	Conelok Nut	2
39	7-0955	Blade	2
40	7-0277	Shaft	1
41	7-0276	Roller	1
42	7-0771	Footpad	2
43	7-0581	Spacer	1
44	7-0945	Idler Bracket	2
45	7-0582	Spring	2
46	322-6	Cap Screw	1
47	7-0083	Bushing	2
48	3256-3	Flat Washer	2
49	7-0056	Pulley, Idler	2
50	3218-3	Jam Nut	2
51	322-2	Cap Screw	2
52	3256-3	Flat Washer	2
53	7-0637	Belt Guide	1
54	3245-7	Set Screw	1
55	321-2	Screw	1
56	7-0553	Flat Washer	1
57	7-0627	Pulley	1
58	322-3	Cap Screw	4
59	32140-58(s)	Sems Unit	4
60	7-0636	Support	1
61	7-0126	Flat Washer	1
62	7-0641	Bearing Housing	1
63	251-5	Bearing	2
64	5-1077	Key	1
65	3257-23	Woodruff Key	1
66	7-0633	Shaft	1
67		Spacer	1
68	7-0967	Pulley	1
69	7-0126	Flat Washer	1
70	32140-55	Sems Unit	4
71	7-0966	Housing	1
72	251-5	Bearing	1
73	7-0626	Spacer	1
74	7-0250	Carriage Bolt	10
75	321-3	Cap Screw	4
76	7-0985	Wheel Assembly, L. H (Consists of)	1
	7-0982	a. Bracket	1
	7-0262	b. Axle	1
	241-87(s)	c. Wheel	1
	32152-2(s)	d. Nut	3
77	7-0984	Wheel Assembly, R. H (Consists of) (Not Shown):	1
	7-0978	a. Bracket	1
	7-0262	b. Axle	1
	241-87(s)	c. Wheel	1
	32152-2(s)	d. Nut	3
78	7-0964	Blade Shaft	1
79	7-0824	Belt, Left Hand	1
80	7-0628	Brake Band (Consists of)	1
		a. Bracket	1
		b. Band Brake	1
		c. Rivet	1
81	7-0647	Shoulder Bolt	1
82	7-0514	Compression Spring	1
83	7-0986	Brake Rod	1
84	7-0152	Flat Washer	1
85	7-0937	Mower Housing	1
86	2410-23	Plug Button	3

PRODUCT CHANGES

In an effort to make improvements available to Toro owners as quickly as possible, minor changes are incorporated into Toro's products from time to time that do not become immediately shown in the Reference Drawing and Parts List. If such a change apparently has been made in your unit, which is not reflected in your manual, see your Toro distributor or his authorized Toro service dealer for information and parts numbers.

IMPORTANT ORDERING INSTRUCTIONS

Repair parts are available from your TORO distributor. To insure getting correct parts without delay, please furnish the following information:

1. Serial number of your product as shown on the name plate.
2. Part number, description and quantity of each part required.
3. Name and address where parts are to be shipped.
4. Do NOT order by reference number, use part number only.

Warranty

The Manufacturer warrants each new piece of equipment sold to be free of defects in material and workmanship. For one year from the purchase date of consumer line equipment or 45 days if sold for commercial use, Toro Manufacturing Corporation will repair or replace for the original purchaser, free of charge, through any Authorized Service Dealer, any part or parts found at our factory in Minneapolis, Minnesota, to be defective under normal use and service. All institutional equipment is warranted for ninety (90) days from the purchase date.

This Warranty does not obligate the Manufacturer to bear the cost of transportation charges in connection with the replacement or repair of defective parts -- nor shall it apply to a machine upon which repairs or alterations have been made, unless authorized by the manufacturer.

This Warranty does not include nor cover standard accessories produced by other manufacturers. Such accessories have separate warranties by their respective manufacturers . . . and repair or exchange will be made on the basis of such warranties, and the policies authorized by them shall be adhered to.

This Warranty is in lieu of all other warranties expressed or implied.

(Detach this page and hang in a conspicuous place)

SAFETY TIPS FOR RIDING LAWN MOWERS, GARDEN TRACTORS AND ATTACHMENTS

Improper use of riding lawn mowers, garden tractors and attachments on the part of the operator can result in injury. To reduce this possibility, give complete and undivided attention to the job at hand.

1. Know the controls and how to stop quickly -- READ THE OWNER'S MANUAL.

2. Do not allow children to operate machine; nor adults to operate it without proper instruction.

3. Clear work area of objects which might be picked up and thrown.

4. Disengage all clutches and shift into neutral before starting motor. Keep hands, feet and clothing away from power driven parts.

5. Do not carry passengers. Keep children and pets a safe distance away.

6. Never direct discharge of any material toward bystanders nor allow anyone near machine while in operation.

7. Disengage power to any attachment and stop motor before leaving operator position.

8. Take precautions when leaving machine unattended (to avoid accidental starting, rolling away, accidental dropping of any attachment, etc.)

9. Disengage power to any attachment whenever it is not in use or when traveling from one work area to another.

10. Stay alert for holes and other hidden hazards.

11. Know what is behind you before backing up.

12. Beware of steep slopes, reduce speed on all side slopes and sharp turns to prevent tipping or losing control.

13. Don't stop or start suddenly when going uphill or downhill.

14. Use extra care when pulling loads or using heavy equipment. (Refer to your owner's manual.)

15. Watch out for traffic when near roadways.

16. Handle gasoline with care -- it is highly flammable.

A. Use approved gasoline container.

B. Never add gasoline to a running motor -- fill tank out of doors and wipe up spilled gasoline.

C. Replace gasoline cap securely.

D. Open doors if motor is run in garage -- exhaust gases are dangerous.

17. Keep machine in good operating condition and keep safety devices in place. Use guards as instructed in owner's manual.

18. Disengage power to any attachment and stop motor before making repairs or adjustments.



TORO POWER MOWERS

Toro power mowers and Power Handle implements are designed and built to give years of precision performance . . . to make them "the best you can buy." And there's over 50 years of manufacturing experience to back them up.
One of Toro's most important objectives — and one which has helped make Toro the world's largest manufacturer of power mowers — is to provide the customer with complete local service and parts. This Toro has done through an extensive chain of service dealers, factory-trained to give you the most careful, competent care for your Toro work-saver.

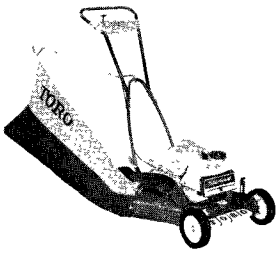

19" WHIRLWIND

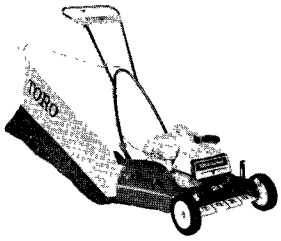

21" HAND PROPELLED WHIRLWIND

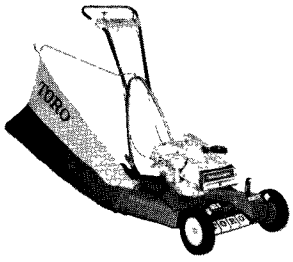

21" POW-R-DRIVE WHIRLWIND


21" HEVI-DUTY WHIRLWIND HAND PROPELLED


21" HEVI-DUTY WHIRLWIND SELF PROPELLED

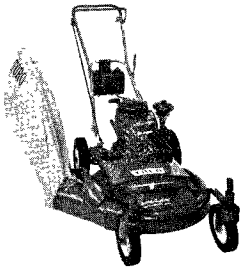
25" HEVI-DUTY WHIRLWIND

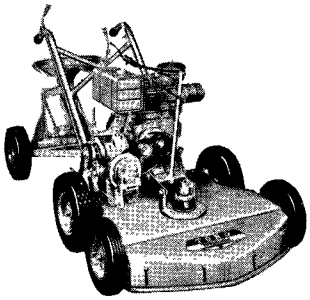
31" WHIRLWIND


34" HEVI-DUTY WHIRLWIND

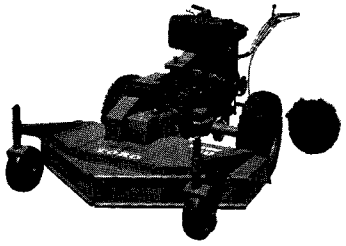
50" TROJAN

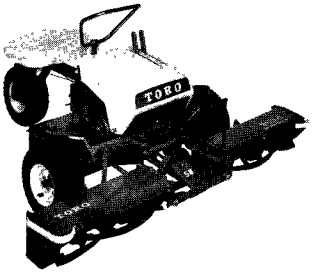

58" PROFESSIONAL

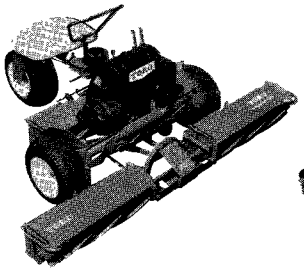
70" PROFESSIONAL

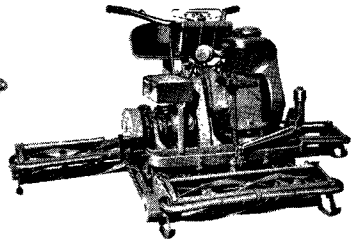
76" PROFESSIONAL

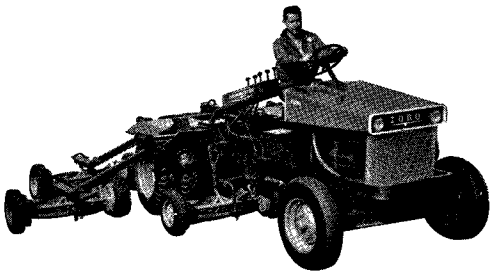
7 UNIT HYDRAULIC PARKMASTER

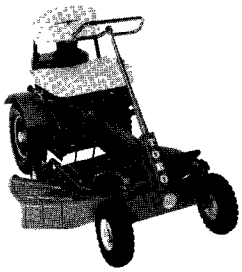
BIG RED

Reel Mower or Rotary Mower . . . Self Propelled or Riding Mower . . . Whatever your preference in Power Mowers, Toro makes a model to fit your needs. Choose from Toro's complete line of fine mowing equipment.

Toro has a mower that's just right for you. And Toro Mowers are the best you can buy!

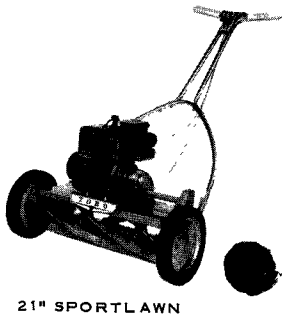
21" SPORTLAWN

FORM NO. 215-67 TORO MANUFACTURING CORPORATION – Minneapolis, Minnesota 55420, U.S.A.

TORO *Builds the right Power Mower for every need!*

LITHO IN U. S. A.