Form No. 3406-537 Rev B

TORO®

Count on it.

Parts Catalog

# Workman® HDX-D

## Utility Vehicle with Bed

**Model No. 07385—Serial No. 316000001 and Up**

**Model No. 07385H—Serial No. 316000001 and Up**

Register at www.Toro.com.
Original Instructions (EN)

*3406-537* B

# Ordering Replacement Parts

To order replacement parts, please supply the part number, the quantity, and the description of each part desired.

### Understanding Reference Numbers

Each identified part in an illustration has a reference number. The reference number for a part also appears in the parts list, along with other information about the part.

This catalog uses two special reference number formats, one to indicate parts in a service assembly and another to indicate the quantity of a given part in an illustration.

### Service Assembly Reference Numbers

Parts in service assemblies have reference numbers in the form a:b. The a represents the reference number of the entire service assembly and the b represents a sequential number unique to each part within the service assembly.

For example, a wheel assembly might be identified by reference number 6, the tire by 6:1, the valve by 6:2, and the wheel by 6:3. When you order the assembly identified by reference number 6, you receive all parts identified by reference numbers 6:1,6:2, and 6:3. However, you may also order any part individually. Reference numbers of this type appear in illustration and in parts lists.

### Reference Numbers Indicating Quantity

In an illustration, if a reference number indicates more than one part, the reference number has the form nX y. The n represents the quantity of the part, the X is the multiplication symbol, and the y represents the reference number.

For example, in an illustration, the reference number 2X 37 means that two of the parts identified by reference number 37 are indicated.

# Contents


Front Frame Assembly . . . 5
Rear Frame and Suspension Assembly . . . 6
Rear Axle Assembly . . . 7
Brake Caliper Assembly No. 127-7424 . . . 8
Driveshaft Assembly No. 114-8367 . . . 9
Front and Rear Brake Line Assembly . . . 10
Front Suspension Assembly . . . 11
Steering and Front Wheel Assembly . . . 12
Steering Linkage Assembly . . . 13
Hydraulic Cylinder Assembly No. 112-3217 . . . 14
Front Control Arm Assembly . . . 15
Brake and Clutch Pedal Assembly . . . 16
Master Cylinder Assembly No. 104-6782 . . . 17
Accelerator Pedal Assembly . . . 18
Console Assembly . . . 19
Shift Assembly No. 106-7887 . . . 21
Bumper, Hood and Seat Base Assembly . . . 22
Dash Assembly . . . 23
Steering Hydraulic Assembly . . . 24
Steering Valve Assembly No. 120-4813 . . . 25
Seat Assembly . . . 26
Roll-Over Protection System Assembly . . . 27
Full Bed and Side Panel Assembly . . . 28
Engine Sub Frame Assembly . . . 29
Engine Assembly . . . 30
Cooling System Assembly . . . 31
Radiator Assembly . . . 32
Clutch Linkage Assembly . . . 33
Transaxle Assembly . . . 34
Case Assembly Transaxle Assembly No. 115-7783 . . . 35
Center Plate Assembly Transaxle Assembly No. 115-7783 . . . 36
Main Shaft Assembly Transaxle Assembly No. 115-7783 . . . 37
Reduction Shaft Assembly Transaxle Assembly No. 115-7783 . . . 38
Reverse Shaft Assembly Transaxle Assembly No. 115-7783 . . . 39
Main Shift Assembly Transaxle Assembly No. 115-7783 . . . 40
Hi-Lo Shift Assembly Transaxle Assembly No. 115-7783 . . . 41
Countershaft Assembly Transaxle Assembly No. 115-7783 . . . 42
Differential Gear Assembly Transaxle Assembly No. 115-7783 . . . 43
Differential Carrier Assembly Transaxle Assembly No. 115-7783 . . . 44
Differential Lock Assembly Transaxle Assembly No. 115-7783 . . . 45
Axle Shaft Assembly Transaxle Assembly No. 115-7783 . . . 46
Battery Assembly . . . 47
Tail Light and Fender Assembly . . . 48
Fuel System Assembly . . . 49
Hydraulic Lift Cylinder Assembly . . . 50
Hydraulic Cylinder Assembly No. 106-7939 . . . 52
Main Hydraulic Pump and Lift Valve Assembly . . . 53
Control Valve Assembly No. 43-1950 . . . 55
Hydraulic Gear Pump Assembly No. 114-8302 . . . 56
Air Cleaner Assembly . . . 57
Air Cleaner Assembly No. 106-5277 . . . 58
Front and Rear Wire Harness Assembly . . . 59
Crankcase Assembly . . . 60
Oil Pan Assembly . . . 61



**© 2019—The Toro® Company**


**8111 Lyndale Avenue South**
**Bloomington, MN 55420**





**Contact us at www.Toro.com.**
**Printed in the USA.**


**All Rights Reserved**

# Contents (continued)

Cylinder Head Assembly . . . 62
Gear Case and Oil Filter Cartridge Assembly . . . 63
Cylinder Head Cover Assembly . . . 64
Oil Pump and Dipstick Assembly . . . 65
Main Bearing Case Assembly . . . 66
Camshaft and Idle Gear Shaft Assembly . . . 67
Piston and Crankshaft Assembly . . . 68
Flywheel Assembly . . . 69
Fuel Camshaft Assembly . . . 70
Idle Apparatus Assembly . . . 71
Stop Solenoid and Fuel Pump Cover Assembly . . . 72
Injection Pump Assembly . . . 73
Governor Assembly . . . 74
Speed Control Plate Assembly . . . 75
Nozzle Holder and Glow Plug Assembly . . . 76
Nozzle Holder Assembly . . . 77
Alternator and Pulley Assembly . . . 80
Alternator Components Assembly . . . 81
Starter Assembly . . . 82
Starter Component Assembly . . . 83
Water Flange and Thermostat Assembly . . . 84
Water Pump and Water Pipe Assembly . . . 85
Valve and Rocker Arm Assembly . . . 86
Inlet and Exhaust Manifold Assembly . . . 87
Miscellaneous Engine Parts . . . 88
Attachments and Accessories . . . 89

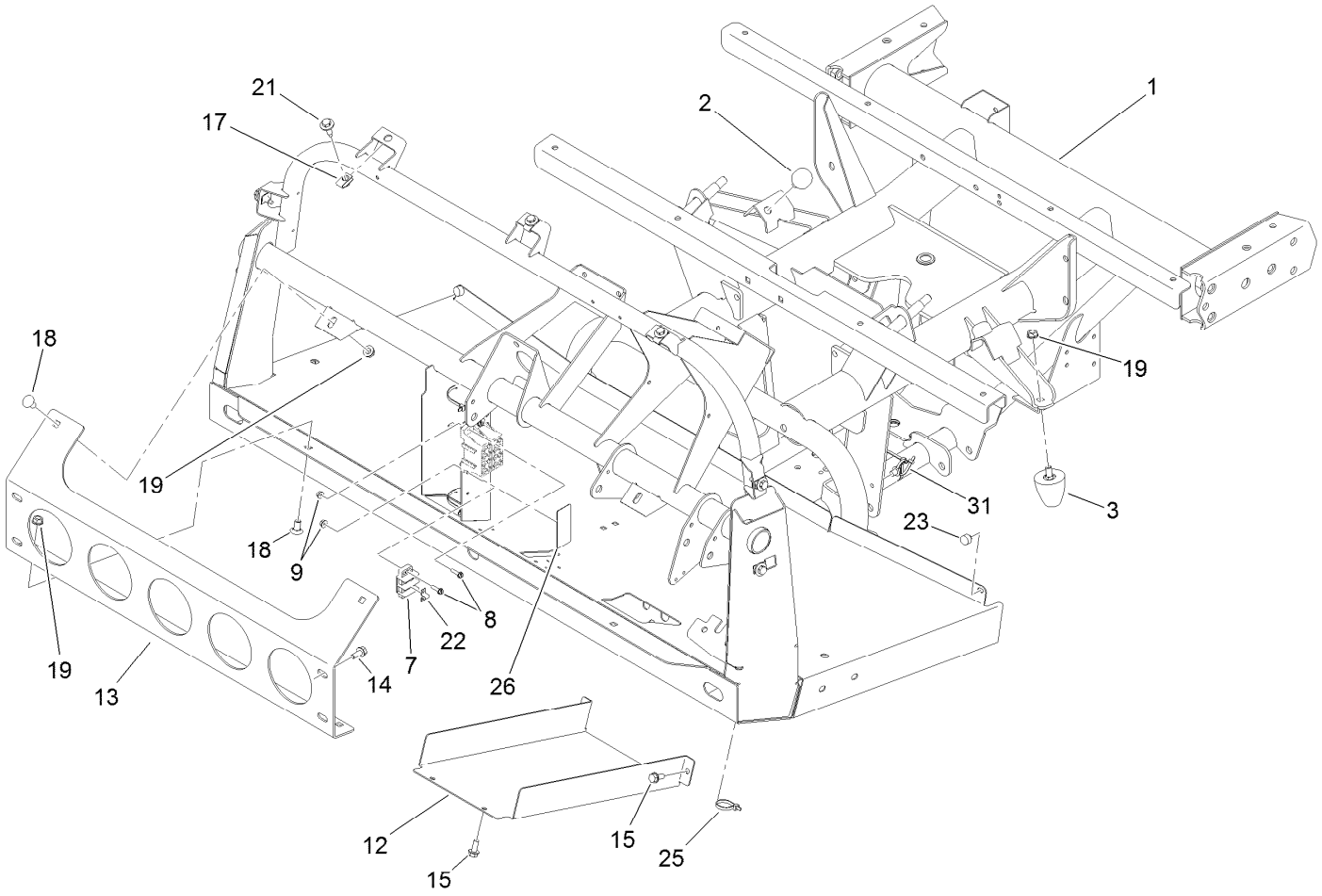


# Front Frame Assembly

| Ref. | Part Number | Qty. | Description |
|---|---|---|---|
| 1 | 120-5083-03 | 1 | Frame-Front |
| 2 | 87-2440 | 2 | Bumper-Rubber |
| 3 | 26-0071 | 2 | Snubber-Rubber |
| 7 | 42862 | 1 | Block-Terminal, Ground |
| 8 | 32105-13 | 6 | Screw-HWH |
| 9 | 3290-148 | 6 | Nut-HF |
| 12 | 106-2427-03 | 1 | Cover |
| 13 | 114-8272-03 | 1 | Bracket-Bumper |
| 14 | 3234-14 | 4 | Screw-HHF |
| 15 | 32144-11 | 4 | Screw-HWH |

| Ref. | Part Number | Qty. | Description |
|---|---|---|---|
| 17 | 94-2413 | 7 | Nut-U |
| 18 | 3231-21 | 4 | Screw-CARR |
| 19 | 3290-357 | 6 | Nut-HHF, Whiz |
| 21 | 114-8418 | 7 | Screw-HWH, Sems |
| 22 | 42863 | 1 | Strip-Jumper |
| 23 | 107-8042 | 2 | Bumper-Rubber |
| 25 | 3290-379 | 9 | Tie-Cable |
| 26 | 115-7813 | 1 | Decal-Fuse |
| 31 | 32180-030 | 2 | Clip-Tie |

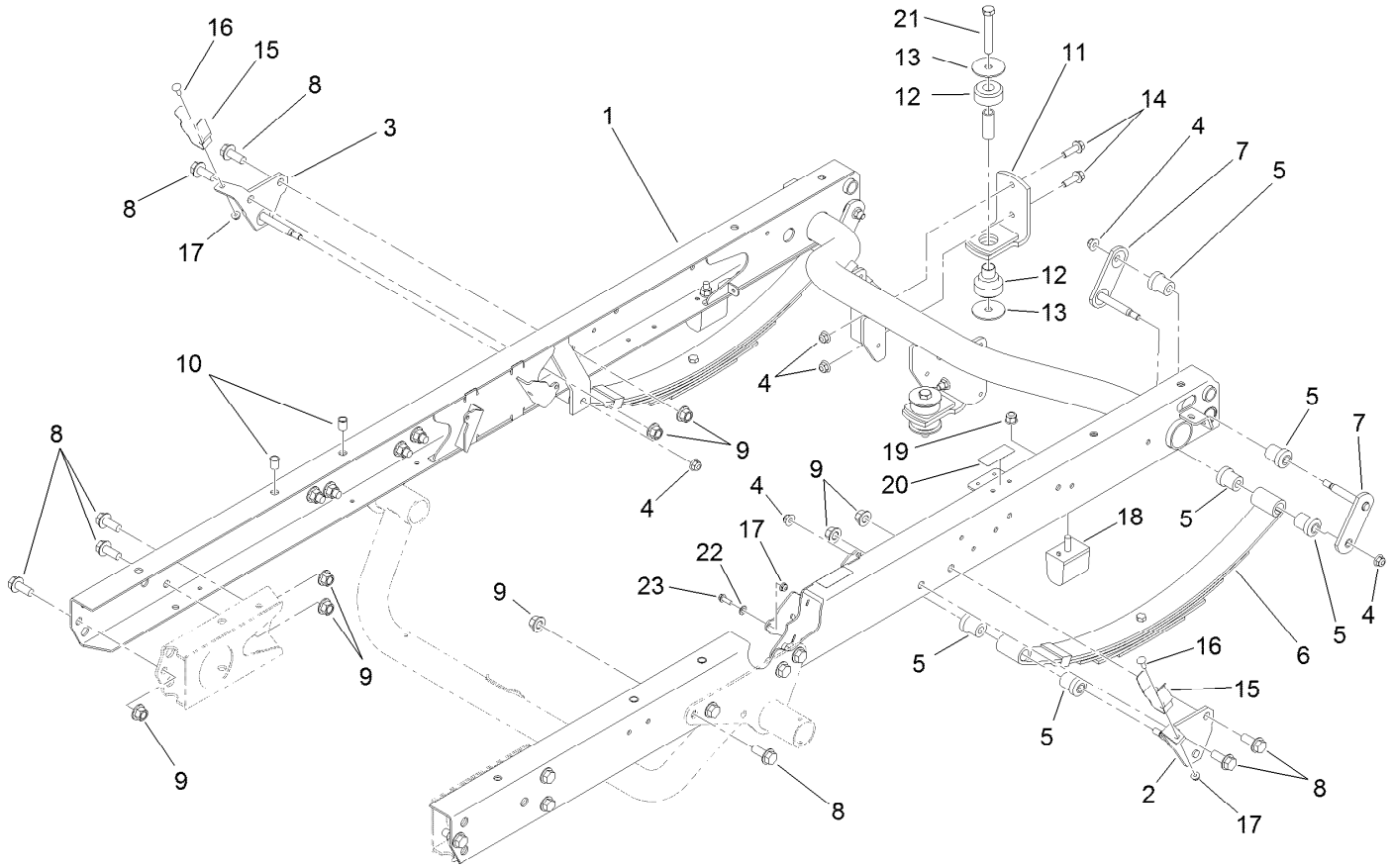


# Rear Frame and Suspension Assembly

| Ref. | Part Number | Qty. | Description |
|---|---|---|---|
| 1 | 115-2255-03 | 1 | Frame-Rear |
| 2 | 131-3474 | 1 | Mount-Spring, LH |
| 3 | 131-3472 | 1 | Mount-Spring, RH |
| 4 | 104-8301 | 10 | Nut-HF, NI |
| 5 | 87-4760 | 12 | Bushing-Rubber |
| 6 | 87-1490 | 2 | Spring-Leaf, Rear |
| 7 | 131-3476 | 4 | Shackle |
| 8 | 3234-38 | 18 | Screw-HHF |
| 9 | 99-5107 | 18 | Nut-Lock |
| 10 | 32148-9 | 4 | Nut-Clinch |
| 11 | 87-5800-03 | 2 | Mount-Transaxle |
| 12 | 106-7865 | 2 | Mount-Engine |

| Ref. | Part Number | Qty. | Description |
|---|---|---|---|
| 13 | 87-5100 | 4 | Washer-Snubbing |
| 14 | 3234-24 | 4 | Screw-HHF |
| 15 | 108-3109 | 2 | Retainer-Cylinder |
| 16 | 3229-1 | 2 | Bolt-CARR |
| 17 | 104-7201 | 3 | Nut-HF |
| 18 | 87-3470 | 2 | Bumper |
| 19 | 103-9511 | 2 | Nut-Lock, NI |
| 20 | 115-2047 | 2 | Decal-Surface, Hot |
| 21 | 33116-080 | 2 | Screw-HH |
| 22 | 3255-8 | 1 | Washer-Lock |
| 23 | 32105-15 | 1 | Screw-HWH |

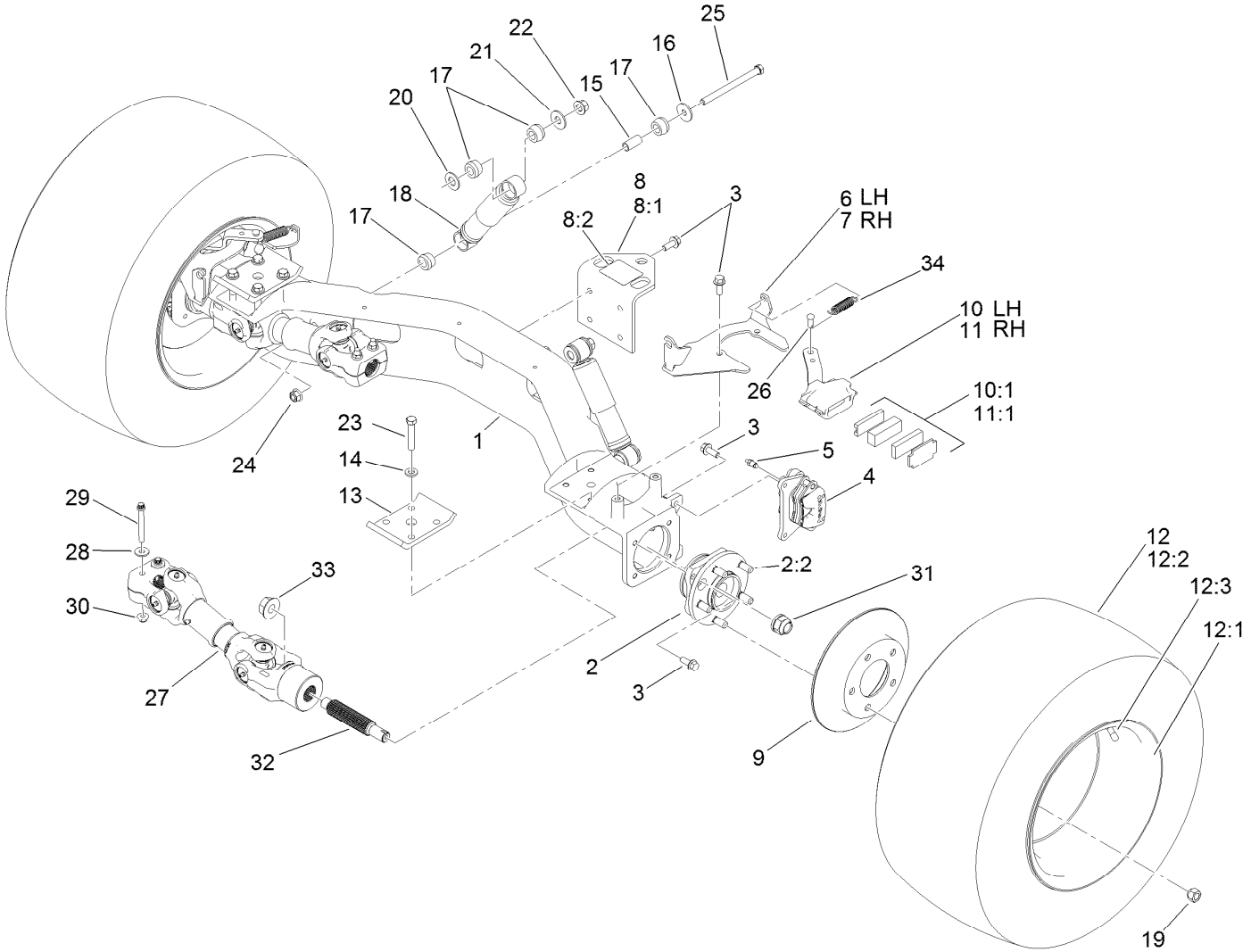


# Rear Axle Assembly

| Ref. | Part Number | Qty. | Description |
|---|---|---|---|
| 1 | 119-9515 | 1 | Axle-Rear |
| 2 | 121-9751 | 2 | Hub-Bearing, Wheel |
| 2:2 | 121-9752 | 5 | Stud-Wheel |
| 3 | 3234-11 | 20 | Screw-HHF |
| 4 | 127-7424 | 2 | Brake Caliper ASM |
| 5 | 119-9509 | 2 | Screw-Bleed |
| 6 | 115-2362-03 | 1 | Bracket-Caliper, LH |
| 7 | 115-2359-03 | 1 | Bracket-Caliper, RH |
| 8 | 115-7742 | 1 | Hitch ASM |
| 8:1 | 92-5951-03 | 1 | Angle-Hitch |
| 8:2 | 136-1163 | 1 | Decal-Load, Towing |
| 9 | 114-8351 | 2 | Rotor-Brake |
| 10 | 114-8365 | 1 | Caliper-Mechanical, LH |
| 10:1 | 115-7847 | 1 | Parking Brake Pad Kit |
| 11 | 114-8366 | 1 | Caliper-Mechanical, RH |
| 11:1 | 115-7847 | 1 | Parking Brake Pad Kit |
| 12 | 131-8428 | 2 | Tire/Wheel ASM |
| 12:1 | 131-6673 | 1 | Tire-Rear |
| 12:2 | 131-8429 | 1 | Wheel |
| 12:3 | 232-27 | 1 | Stem-Valve |
| 13 | 87-7470-03 | 2 | Plate-Spring, Clamp |

| Ref. | Part Number | Qty. | Description |
|---|---|---|---|
| 14 | 87-7480 | 8 | Washer |
| 15 | 87-3600 | 2 | Spacer-Absorber, Shock |
| 16 | 87-5330 | 2 | Washer |
| 17 | 87-3920 | 8 | Bushing |
| 18 | 121-9774 | 2 | Absorber-Shock |
| 19 | 242-50 | 10 | Nut-Lug |
| 20 | 3256-27 | 2 | Washer-Flat |
| 21 | 3256-6 | 2 | Washer-Flat |
| 22 | 99-5107 | 2 | Nut-Lock |
| 23 | 115-2398 | 8 | Bolt-HH |
| 24 | 114-8417 | 2 | Nut-HF, NI |
| 25 | 114-8424 | 2 | Screw-HH |
| 26 | 283-85 | 2 | Pin-Clevis |
| 27 | 114-8367 | 2 | Driveshaft ASM |
| 28 | 80-6990 | 4 | Washer-Hardened |
| 29 | 98-2939 | 4 | Screw-Cap |
| 30 | 104-8301 | 4 | Nut-HF, NI |
| 31 | 115-2164 | 2 | Nut-Spindle |
| 32 | 115-7771 | 2 | Shaft-Splined |
| 33 | 32128-53 | 2 | Nut-HF |
| 34 | 104-6415 | 2 | Spring-Return, Pedal |

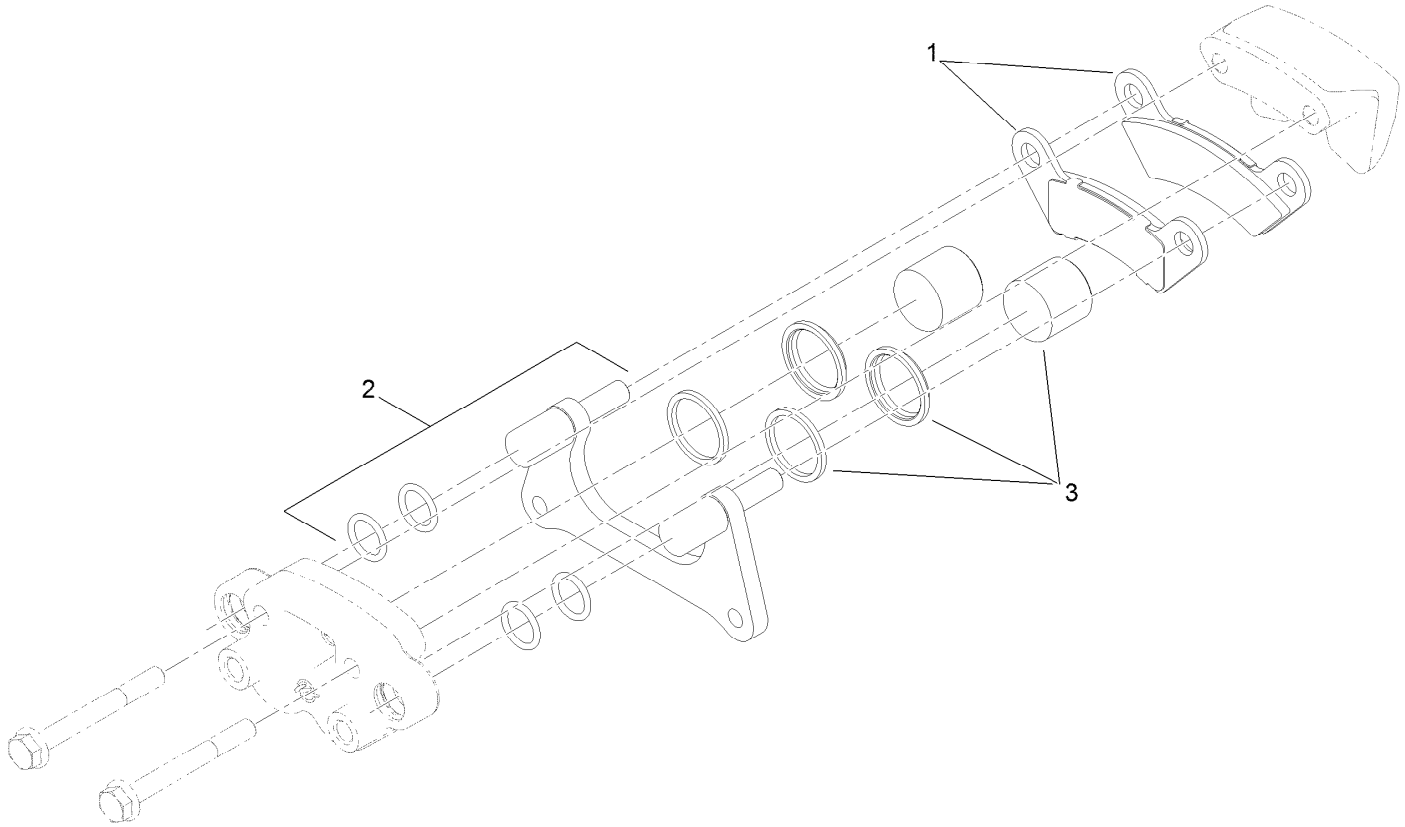


# Brake Caliper Assembly No. 127-7424

| *Ref.* | *Part Number* | *Qty.* | *Description* |
|---|---|---|---|
| 1 | 119-9510 | 1 | Pads-Brake |
| 2 | 119-9511 | 1 | Bracket Kit |
| 3 | 119-9512 | 1 | Piston Kit |

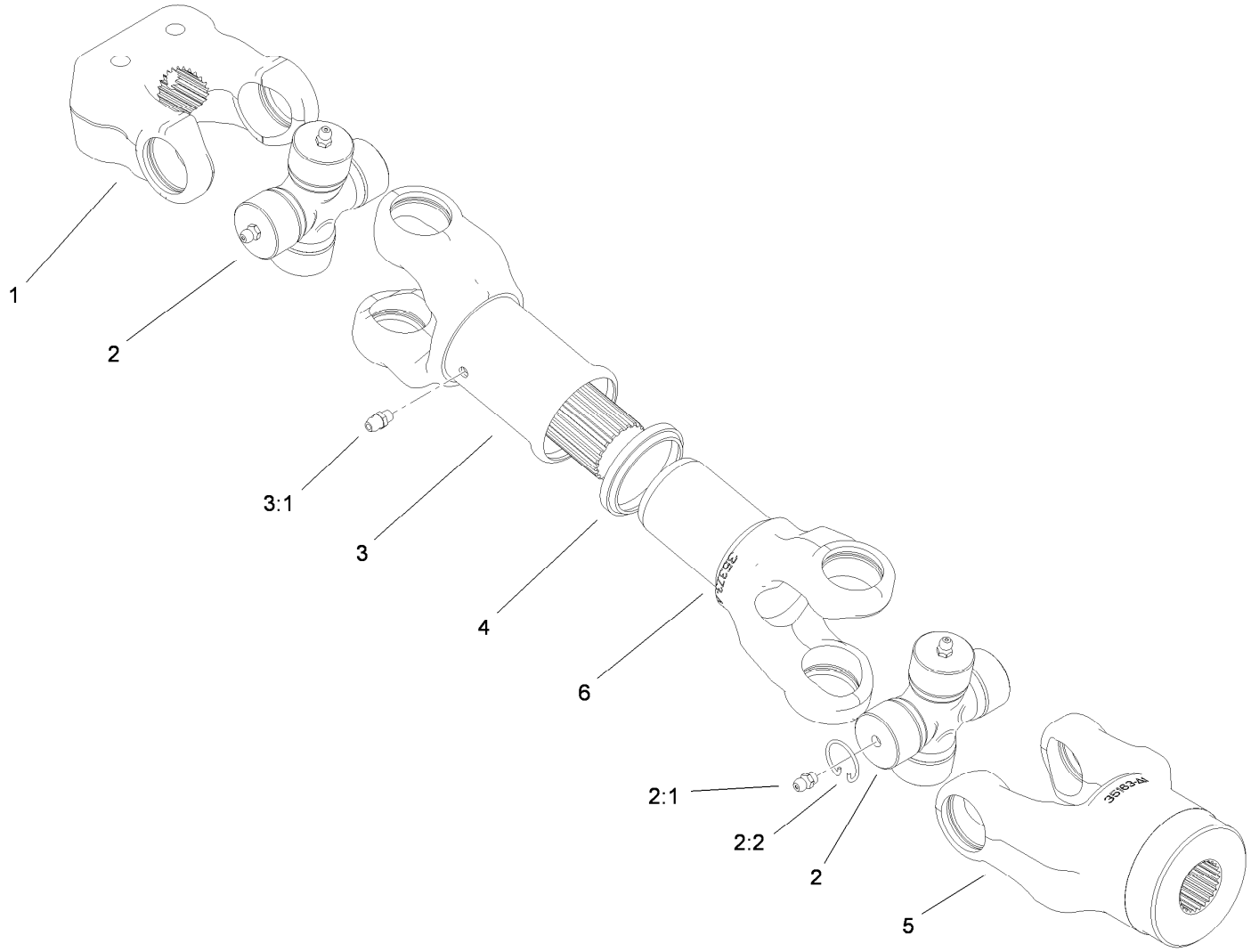


# Driveshaft Assembly No. 114-8367

| Ref. | Part Number | Qty. | Description |
|---|---|---|---|
| 1 | 98-2940 | 1 | Yoke |
| 2 | 92-4187 | 2 | Cross And Bearing Kit |
| 2:1 | 302-58 | 4 | Fitting-Straight |
| 2:2 | 92-4188 | 4 | Ring-Snap |
| 3 | 92-4179 | 1 | Yoke-Tube, Shaft And Seal |
| 3:1 | 302-5 | 1 | Fitting-Grease |
| 4 | 92-4180 | 1 | Seal |
| 5 | 115-2351 | 1 | Yoke |
| 6 | 92-4182 | 1 | Yoke-Telescoping |

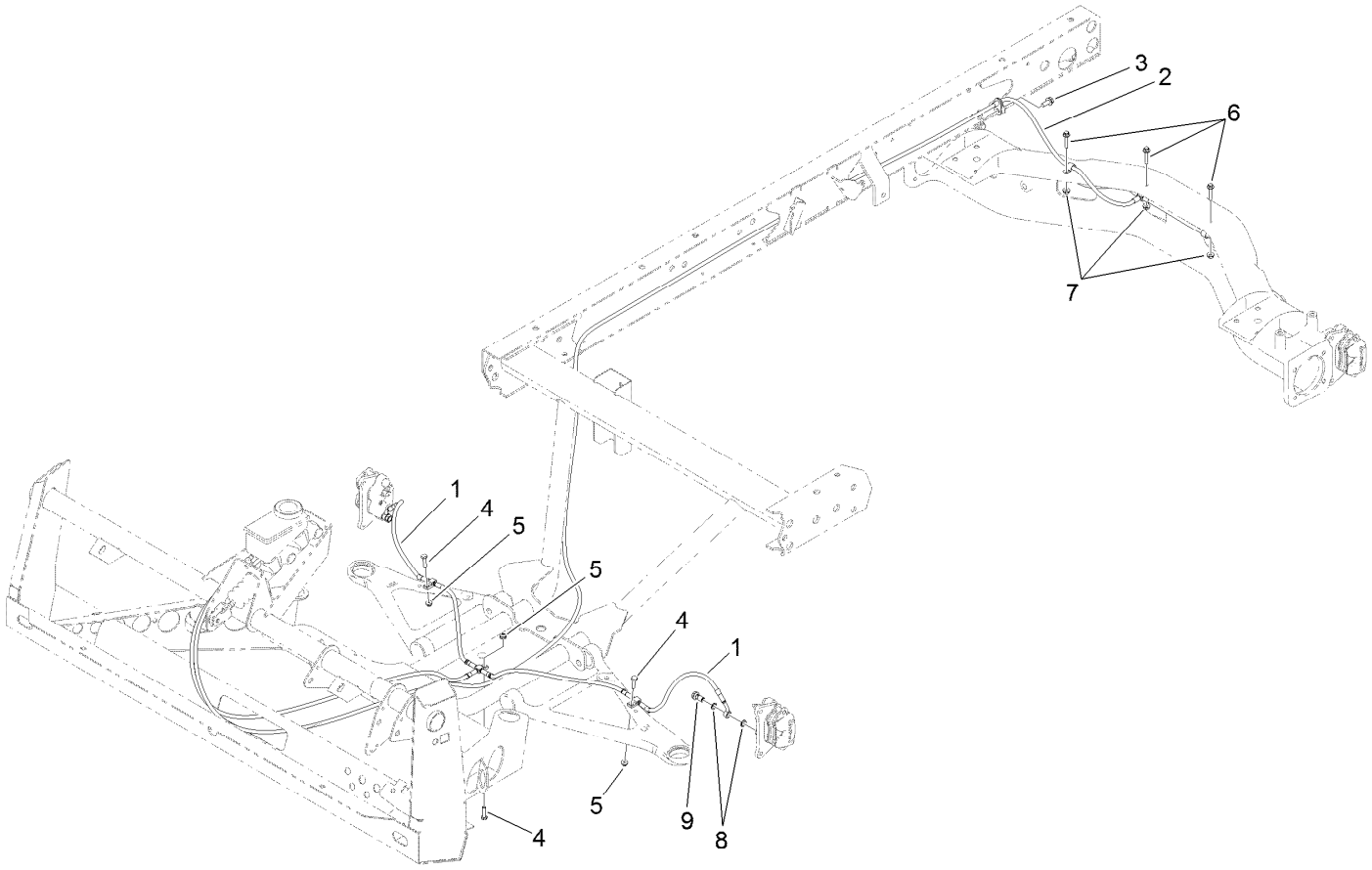


# Front and Rear Brake Line Assembly

| *Ref.* | *Part Number* | *Qty.* | *Description* |
|---|---|---|---|
| 1 | 119-9682 | 1 | Front Brake Line ASM |
| 2 | 119-9681 | 1 | Rear Brake Line ASM |
| 3 | 32144-11 | 1 | Screw-HWH |
| 4 | 321-6 | 3 | Screw-HH |
| 5 | 104-7201 | 3 | Nut-HF |
| 6 | 3234-21 | 3 | Screw-HHF |
| 7 | 32128-33 | 3 | Nut-HF |
| 8 | 115-2341 | 8 | Washer-Banjo |
| 9 | 120-4875 | 4 | Bolt-Flange, Banjo |

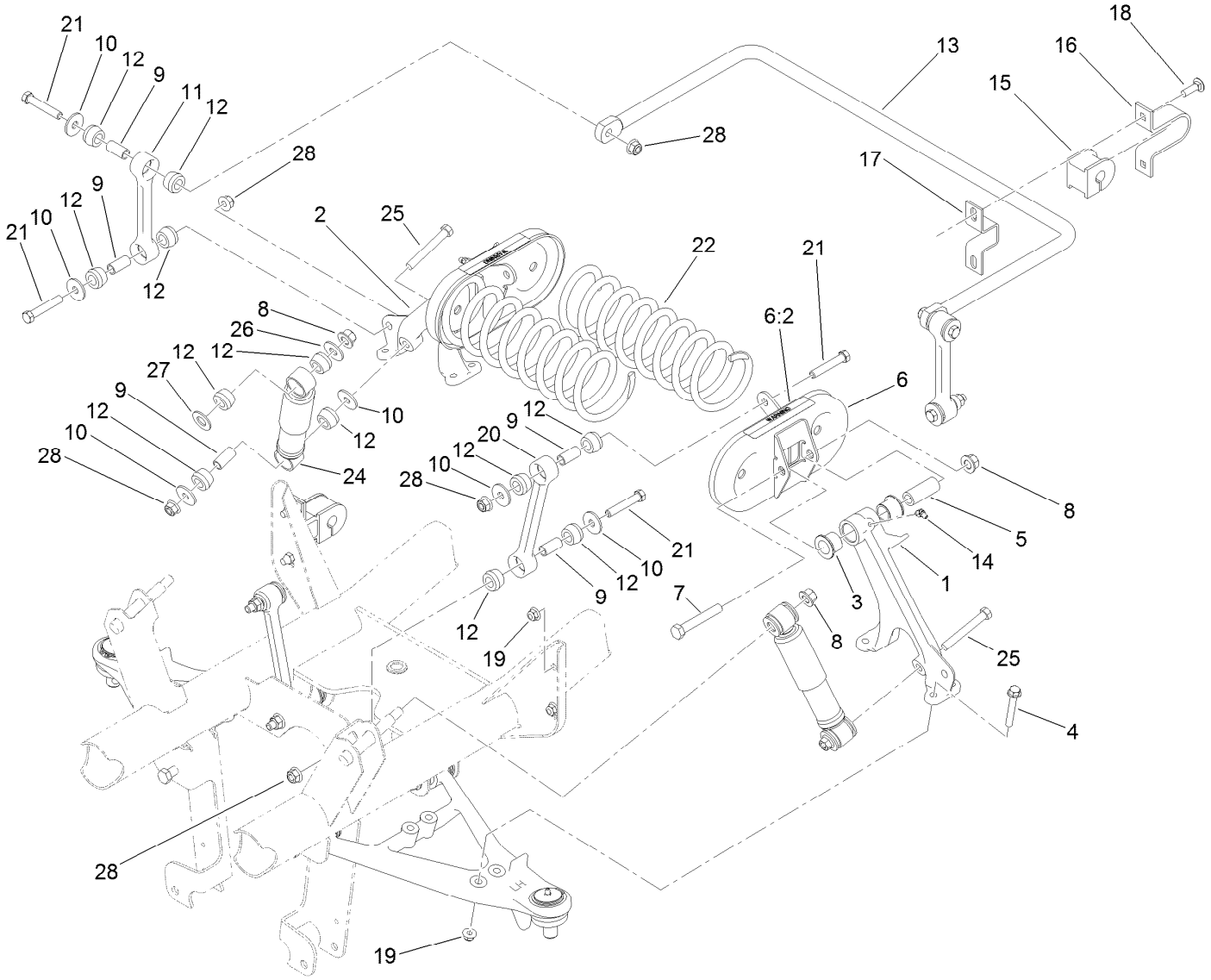


# Front Suspension Assembly

| Ref. | Part Number | Qty. | Description |
|---|---|---|---|
| 1 | 87-0160 | 1 | Tower-Control Arm, LH |
| 2 | 87-0150 | 1 | Tower-Control Arm, RH |
| 3 | 33-3090 | 4 | Bushing |
| 4 | 3234-39 | 8 | Screw-HHF |
| 5 | 87-2500 | 2 | Sleeve-Spring, Pivot |
| 6 | 105-7958 | 2 | Spring Cradle ASM |
| 6:2 | 93-9879 | 1 | Decal-Warning |
| 7 | 325-13 | 2 | Screw-HH |
| 8 | 99-5107 | 4 | Nut-Lock |
| 9 | 87-3600 | 10 | Spacer-Absorber, Shock |
| 10 | 87-5330 | 12 | Washer |
| 11 | 119-6725 | 2 | Link, Anti-Sway Bar |
| 12 | 87-3920 | 24 | Bushing |
| 13 | 87-3850-03 | 1 | Bar-Sway, Anti |

| Ref. | Part Number | Qty. | Description |
|---|---|---|---|
| 14 | 302-11 | 2 | Fitting-Lube, 45 DEG |
| 15 | 87-3910 | 2 | Bushing-Rubber |
| 16 | 87-4010-03 | 2 | Clamp-Bar, Sway |
| 17 | 87-3890-03 | 2 | Bracket-Bar, Sway |
| 18 | 3231-25 | 4 | Bolt-CARR |
| 19 | 104-8301 | 12 | Nut-HF, NI |
| 20 | 119-6724 | 2 | Link-Stabilizer |
| 21 | 324-10 | 8 | Screw-HH |
| 22 | 105-4183-01 | 2 | Spring-Compression |
| 24 | 121-9774 | 2 | Absorber-Shock |
| 25 | 324-13 | 2 | Screw-HH |
| 26 | 3256-6 | 2 | Washer-Flat |
| 27 | 3256-27 | 2 | Washer-Flat |
| 28 | 114-8417 | 10 | Nut-HF, NI |

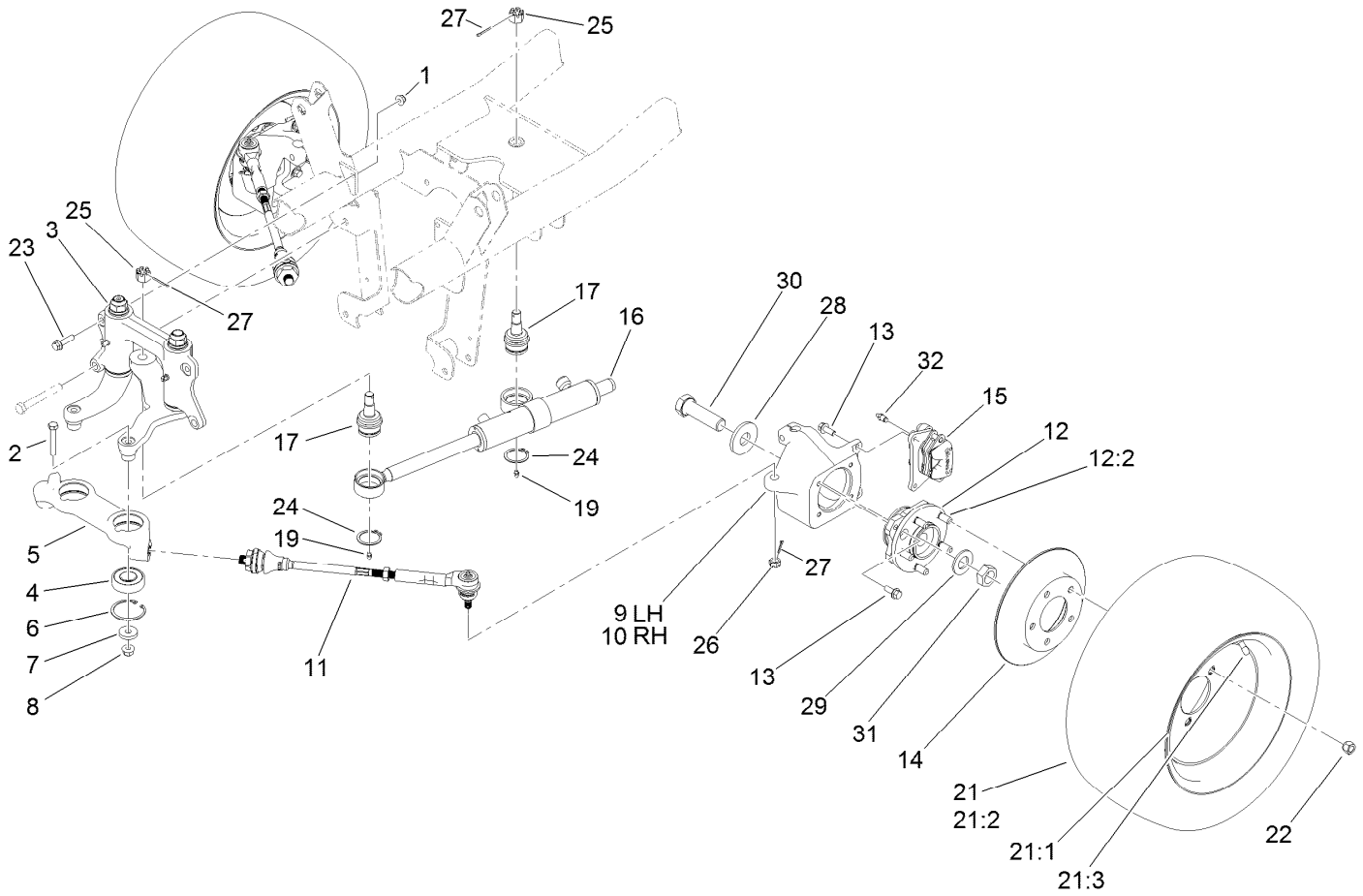


# Steering and Front Wheel Assembly

| Ref. | Part Number | Qty. | Description |
|---|---|---|---|
| 1 | 104-8301 | 2 | Nut-HF, NI |
| 2 | 324-10 | 2 | Screw-HH |
| 3 | | 1 | Steering Linkage ASM ● |
| 4 | 119-9548 | 2 | Bearing-Ball |
| 5 | 114-8296 | 1 | Link-Center |
| 6 | 32120-22 | 2 | Ring-Snap, Internal |
| 7 | 112843 | 2 | Washer |
| 8 | 114-8417 | 2 | Nut-HF, NI |
| 9 | 119-9513 | 1 | Knuckle-LH |
| 10 | 119-9514 | 1 | Knuckle-RH |
| 11 | 114-8356 | 2 | Tie Rod ASM |
| 12 | 121-9751 | 2 | Hub-Bearing, Wheel |
| 12:2 | 121-9752 | 5 | Stud-Wheel |
| 13 | 3234-11 | 12 | Screw-HHF |
| 14 | 114-8351 | 2 | Rotor-Brake |
| 15 | 127-7424 | 2 | Brake Caliper ASM |
| 16 | 112-3217 | 1 | HYD Cylinder ASM |

| Ref. | Part Number | Qty. | Description |
|---|---|---|---|
| 17 | 106-6774 | 2 | Joint-Ball |
| 19 | 302-5 | 2 | Fitting-Grease |
| 21 | 131-8430 | 2 | Tire/Wheel ASM |
| 21:1 | 131-8431 | 1 | Wheel |
| 21:2 | 131-6670 | 1 | Tire |
| 21:3 | 232-27 | 1 | Stem-Valve |
| 22 | 242-50 | 10 | Nut-Lug |
| 23 | 114-4681 | 2 | Screw-HHF |
| 24 | 32151-104 | 2 | Ring-Retaining, External |
| 25 | 32136-14 | 2 | Nut-Hst |
| 26 | 32136-3 | 2 | Nut-SHH |
| 27 | 3272-12 | 4 | Pin-Cotter |
| 28 | 104-0719 | 2 | Washer-Hardened |
| 29 | 3256-62 | 2 | Washer-Flat |
| 30 | 115-2173 | 2 | Screw-HH |
| 31 | 3296-49 | 2 | Nut-Lock, NI |
| 32 | 119-9509 | 2 | Screw-Bleed |

● Not serviced separately

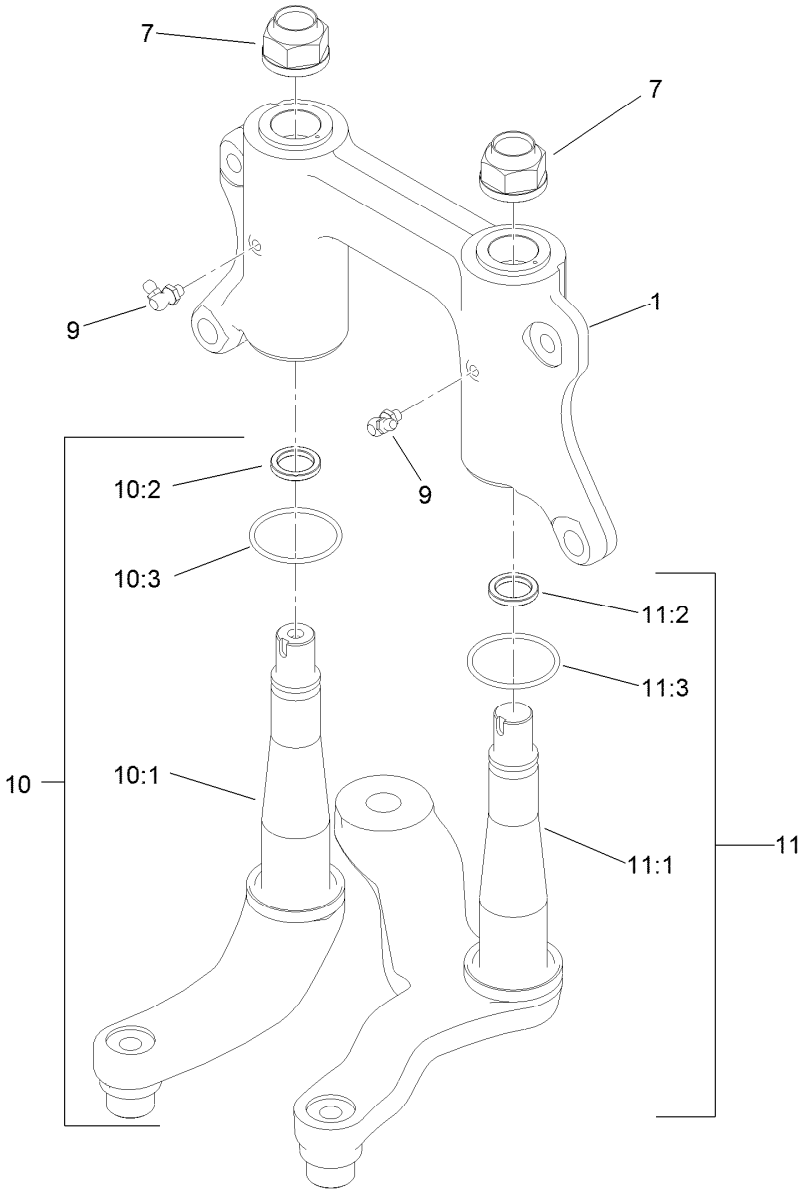


# Steering Linkage Assembly

| *Ref.* | *Part Number* | *Qty.* | *Description* |
|---|---|---|---|
| 1 | 132-6767 | 1 | Mount-Pivot, W/Bushings |
| 7 | 115-2164 | 2 | Nut-Spindle |
| 9 | 302-60 | 2 | Fitting-Grease |
| 10 | 132-0794 | 1 | Idler Arm ASM |
| 10:1 | 132-0792 | 1 | Idler Arm And Thrust Washer ASM |
| 10:2 | 93-7510 | 1 | Ring-Quad |
| 10:3 | 131-3499 | 1 | O-Ring |
| 11 | 132-0795 | 1 | Pitman Arm ASM |
| 11:1 | 132-0793 | 1 | Pitman Arm And Thrust Washer ASM |
| 11:2 | 93-7510 | 1 | Ring-Quad |
| 11:3 | 131-3499 | 1 | O-Ring |

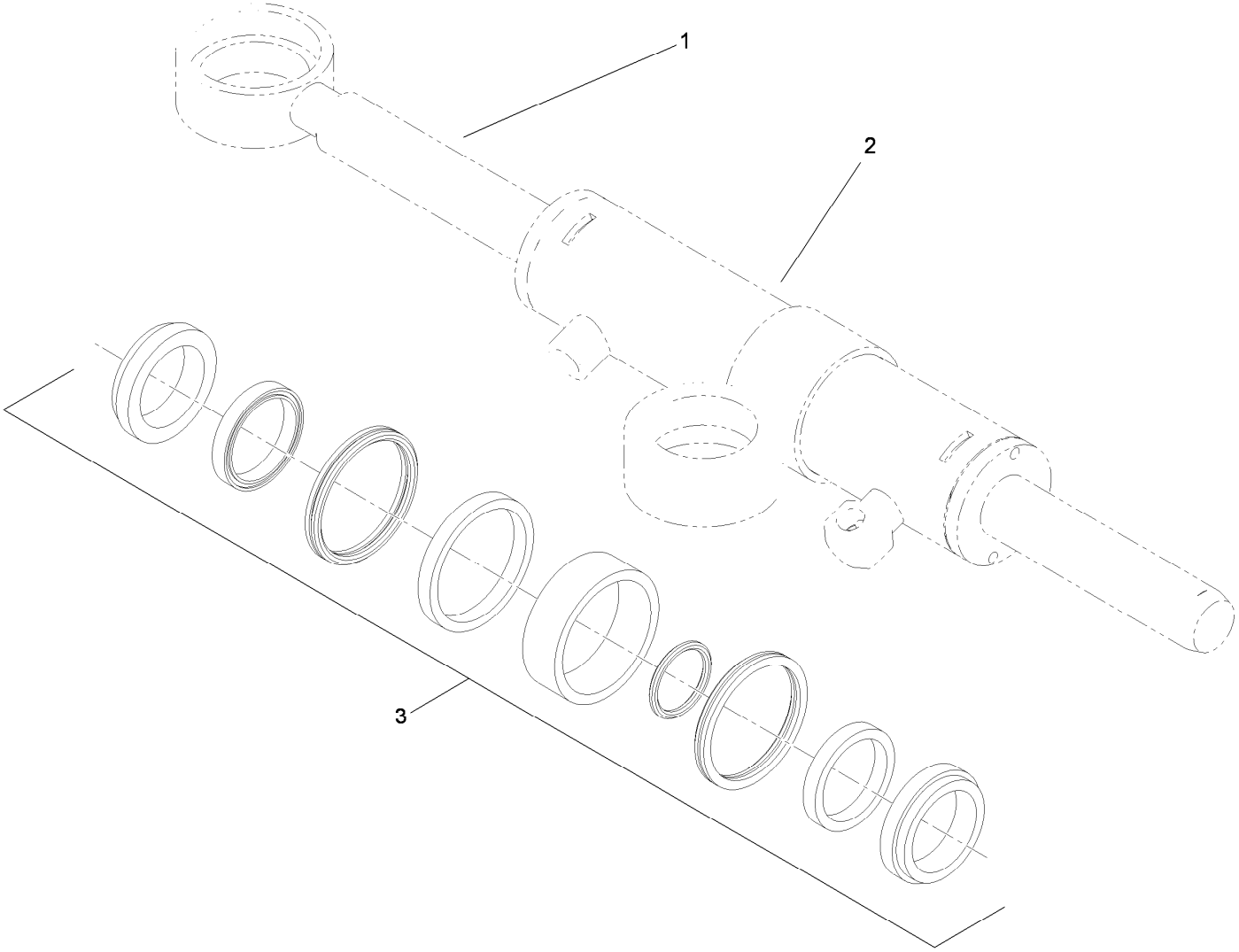


# Hydraulic Cylinder Assembly No. 112-3217

| *Ref.* | *Part Number* | *Qty.* | *Description* |
|---|---|---|---|
| 1 | | 1 | Rod-Cylinder ● |
| 2 | | 1 | Body-Cylinder ● |
| 3 | 115-2160 | 1 | Cylinder Repair Kit |

● Not serviced separately

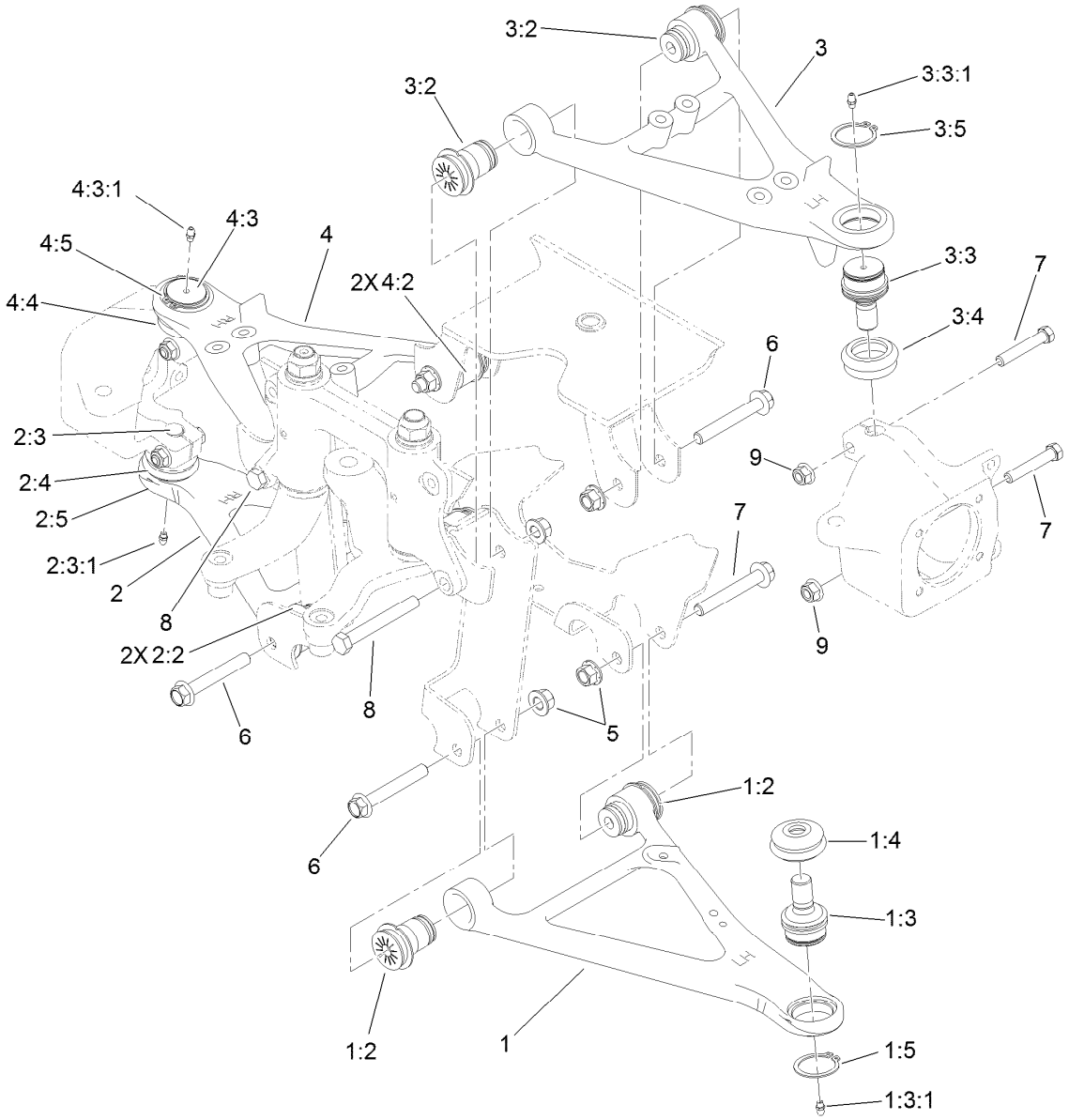


# Front Control Arm Assembly

| Ref. | Part Number | Qty. | Description |
|---|---|---|---|
| 1 | 115-2405 | 1 | Lower LH Control Arm ASM |
| 1:2 | 87-1450 | 2 | Bushing-Flange |
| 1:3 | 115-2165 | 1 | Ball Joint |
| 1:3:1 | 302-5 | 1 | Fitting-Grease |
| 1:4 | 87-2420 | 1 | Seal-Joint, Ball |
| 1:5 | 32151-104 | 1 | Ring-Retaining, External |
| 2 | 115-2407 | 1 | Lower RH Control Arm ASM |
| 2:2 | 87-1450 | 2 | Bushing-Flange |
| 2:3 | 115-2165 | 1 | Ball Joint |
| 2:3:1 | 302-5 | 1 | Fitting-Grease |
| 2:4 | 87-2420 | 1 | Seal-Joint, Ball |
| 2:5 | 32151-104 | 1 | Ring-Retaining, External |
| 3 | 115-2404 | 1 | Upper LH Control Arm ASM |
| 3:2 | 87-1450 | 2 | Bushing-Flange |
| 3:3 | 115-2165 | 1 | Ball Joint |

| Ref. | Part Number | Qty. | Description |
|---|---|---|---|
| 3:3:1 | 302-5 | 1 | Fitting-Grease |
| 3:4 | 87-2420 | 1 | Seal-Joint, Ball |
| 3:5 | 32151-104 | 1 | Ring-Retaining, External |
| 4 | 115-2406 | 1 | Upper RH Control Arm ASM |
| 4:2 | 87-1450 | 2 | Bushing-Flange |
| 4:3 | 115-2165 | 1 | Ball Joint |
| 4:3:1 | 302-5 | 1 | Fitting-Grease |
| 4:4 | 87-2420 | 1 | Seal-Joint, Ball |
| 4:5 | 32151-104 | 1 | Ring-Retaining, External |
| 5 | 99-5107 | 8 | Nut-Lock |
| 6 | 114-8419 | 6 | Screw-HHF |
| 7 | 324-10 | 4 | Screw-HH |
| 8 | 325-17 | 2 | Screw-HH |
| 9 | 114-8417 | 4 | Nut-HF, NI |

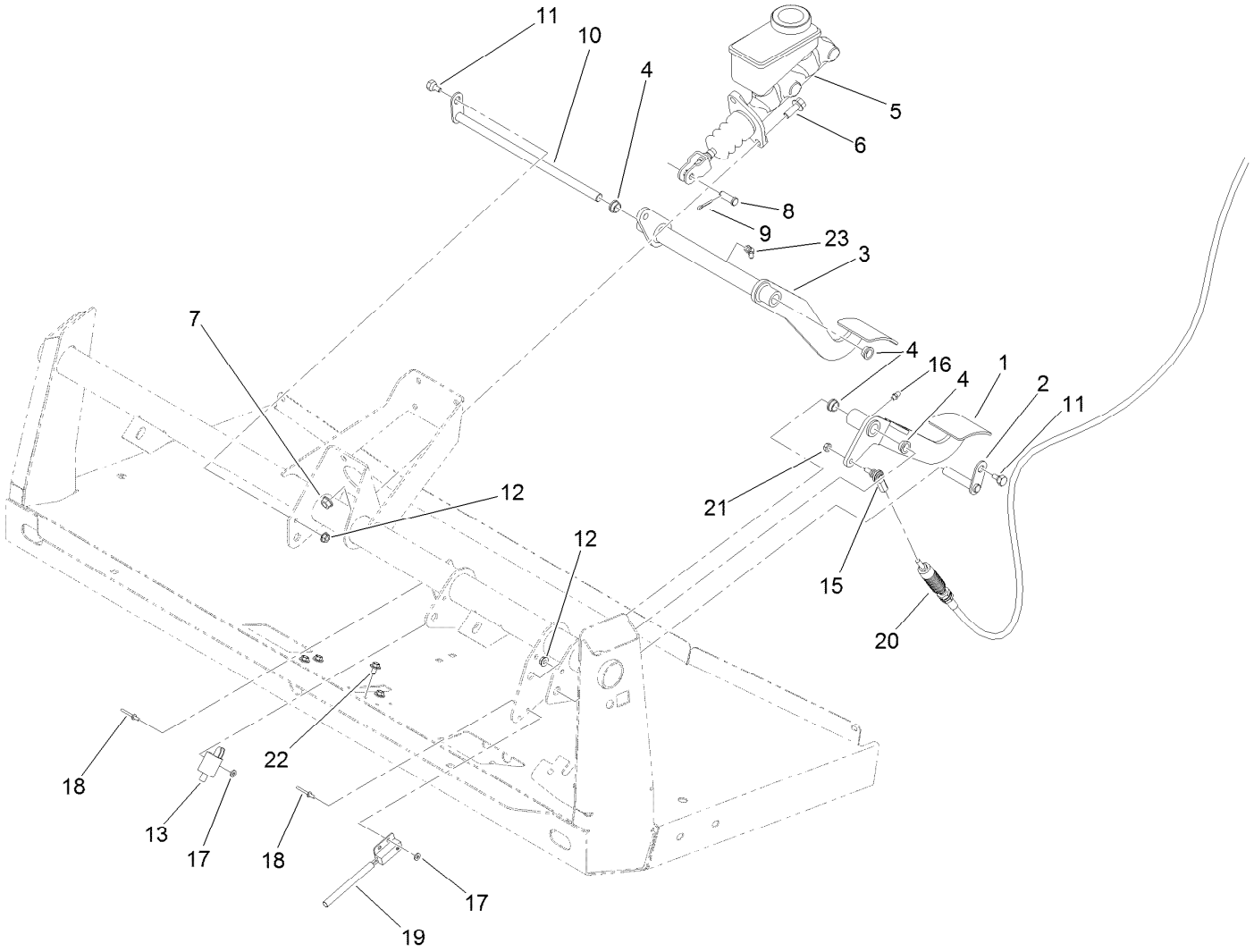


# Brake and Clutch Pedal Assembly

| Ref. | Part Number | Qty. | Description |
|---|---|---|---|
| 1 | 127-7357-03 | 1 | Pedal-Clutch |
| 2 | 115-2269 | 1 | Pin-Pivot |
| 3 | 120-5023-03 | 1 | Pedal-Brake |
| 4 | 256-156 | 4 | Bushing-Flange |
| 5 | 104-6782 | 1 | Master Cylinder ASM |
| 6 | 3234-11 | 2 | Screw-HHF |
| 7 | 3290-357 | 2 | Nut-HHF, Whiz |
| 8 | 283-2 | 1 | Pin-Clevis |
| 9 | 3272-10 | 1 | Pin-Cotter |
| 10 | 106-2475 | 1 | Shaft-Brake |
| 11 | 63-3410 | 2 | Screw-Shoulder |

| Ref. | Part Number | Qty. | Description |
|---|---|---|---|
| 12 | 32128-33 | 2 | Nut-HF |
| 13 | 95-1653 | 1 | Switch-Pole, Single |
| 15 | 110-2554 | 1 | Rod End-Spherical |
| 16 | 302-5 | 1 | Fitting-Grease |
| 17 | 3256-21 | 4 | Washer-Flat |
| 18 | 3269-25 | 4 | Rivet-Pop |
| 19 | 105-0023 | 1 | Switch-Proximity |
| 20 | 115-2284 | 1 | Cable-Clutch |
| 21 | 3296-13 | 1 | Nut-Lock, NI |
| 22 | 46-6811 | 4 | Screw-HWH |
| 23 | 302-60 | 1 | Fitting-Grease |

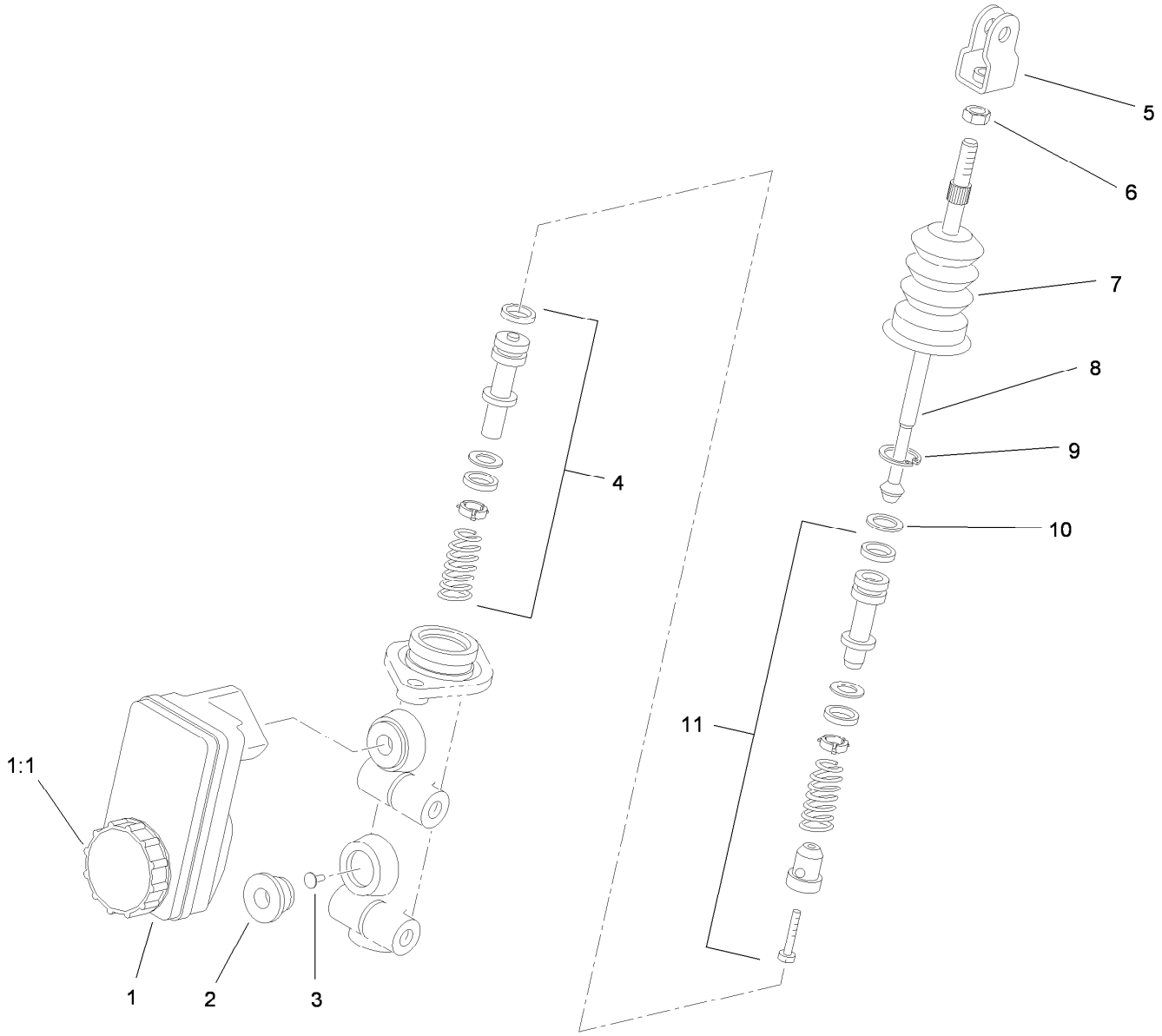


# Master Cylinder Assembly No. 104-6782

| *Ref.* | *Part Number* | *Qty.* | *Description* |
|---|---|---|---|
| 1 | 104-6845 | 1 | Reservoir ASM |
| 1:1 | 92-4112 | 1 | Cap ASM |
| 2 | 93-8971 | 2 | Seal-Port, Flange |
| 3 | 92-4103 | 1 | Pin-Stop |
| 4 | 92-4102 | 1 | Secondary Piston ASM |
| 5 | 92-4110 | 1 | Clevis |
| 6 | 21-0360 | 1 | Nut-Hex |
| 7 | 94-5209 | 1 | Cover-Dust |
| 8 | 94-5210 | 1 | Rod-Push |
| 9 | 92-4109 | 1 | Ring-Snap |
| 10 | 92-4108 | 1 | Retainer-Washer |
| 11 | 92-4101 | 1 | Primary Piston ASM |

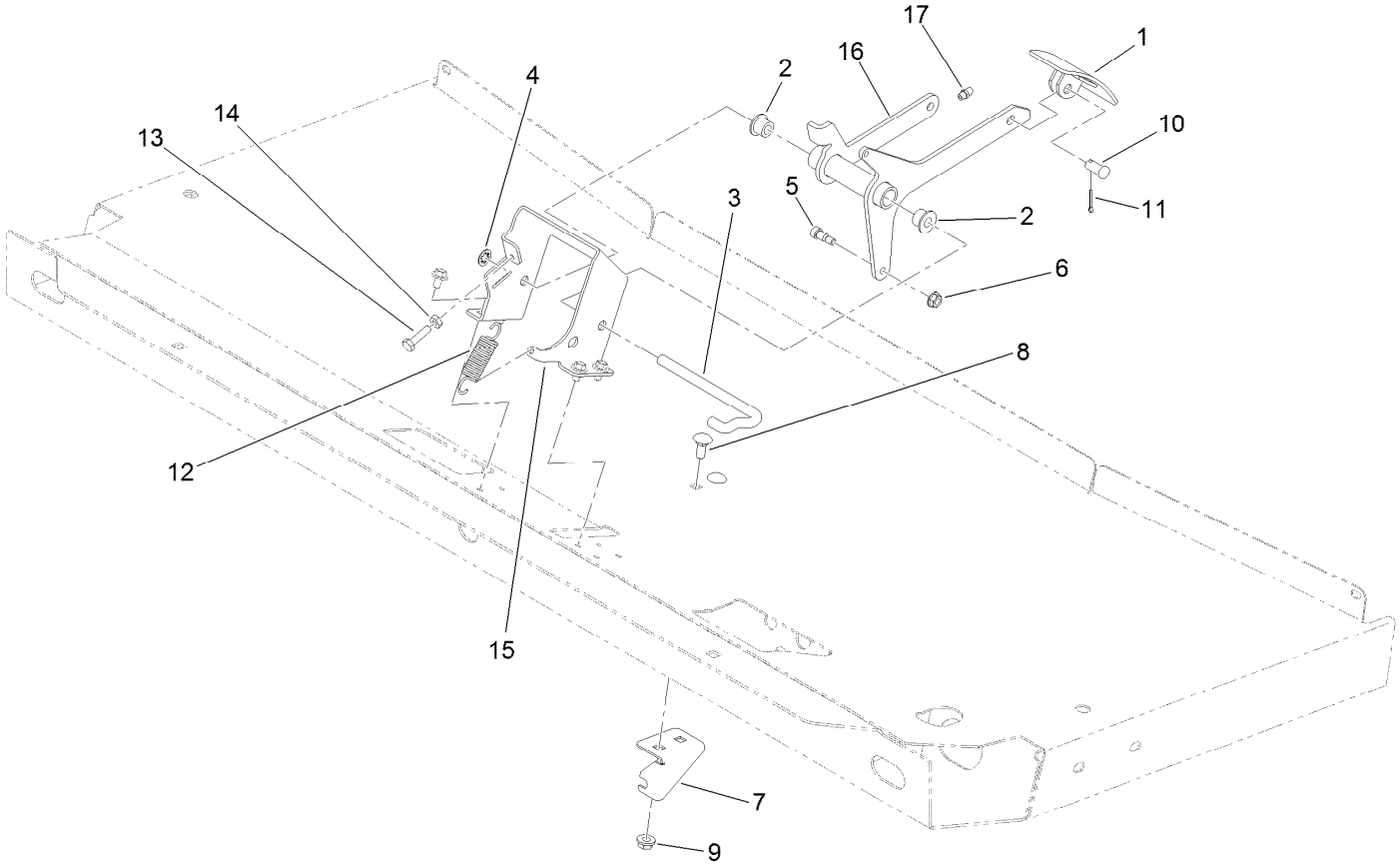


# Accelerator Pedal Assembly

| Ref. | Part Number | Qty. | Description |
|---|---|---|---|
| 1 | 93-8969-03 | 1 | Pedal |
| 2 | 256-259 | 2 | Bushing-Flange |
| 3 | 87-2880 | 1 | Shaft-Pedal, Accelerator |
| 4 | 32151-56 | 1 | Ring-Retaining, External |
| 5 | 119-4881 | 1 | Bolt-Shoulder |
| 6 | 32128-33 | 1 | Nut-HF |
| 7 | 120-4982 | 1 | Bracket-Mount, Cable |
| 8 | 3230-1 | 2 | Bolt-CARR |
| 9 | 32128-20 | 2 | Nut-HF |

| Ref. | Part Number | Qty. | Description |
|---|---|---|---|
| 10 | 283-85 | 1 | Pin-Clevis |
| 11 | 3272-6 | 1 | Pin-Cotter |
| 12 | 67-1450 | 1 | Spring-Idler |
| 13 | 321-6 | 1 | Screw-HH |
| 14 | 3218-1 | 1 | Nut-Jam |
| 15 | 127-8625-03 | 1 | Bracket-Mount, Pedal |
| 16 | 120-4983-03 | 1 | Pedal-Accelerator |
| 17 | 302-5 | 1 | Fitting-Grease |

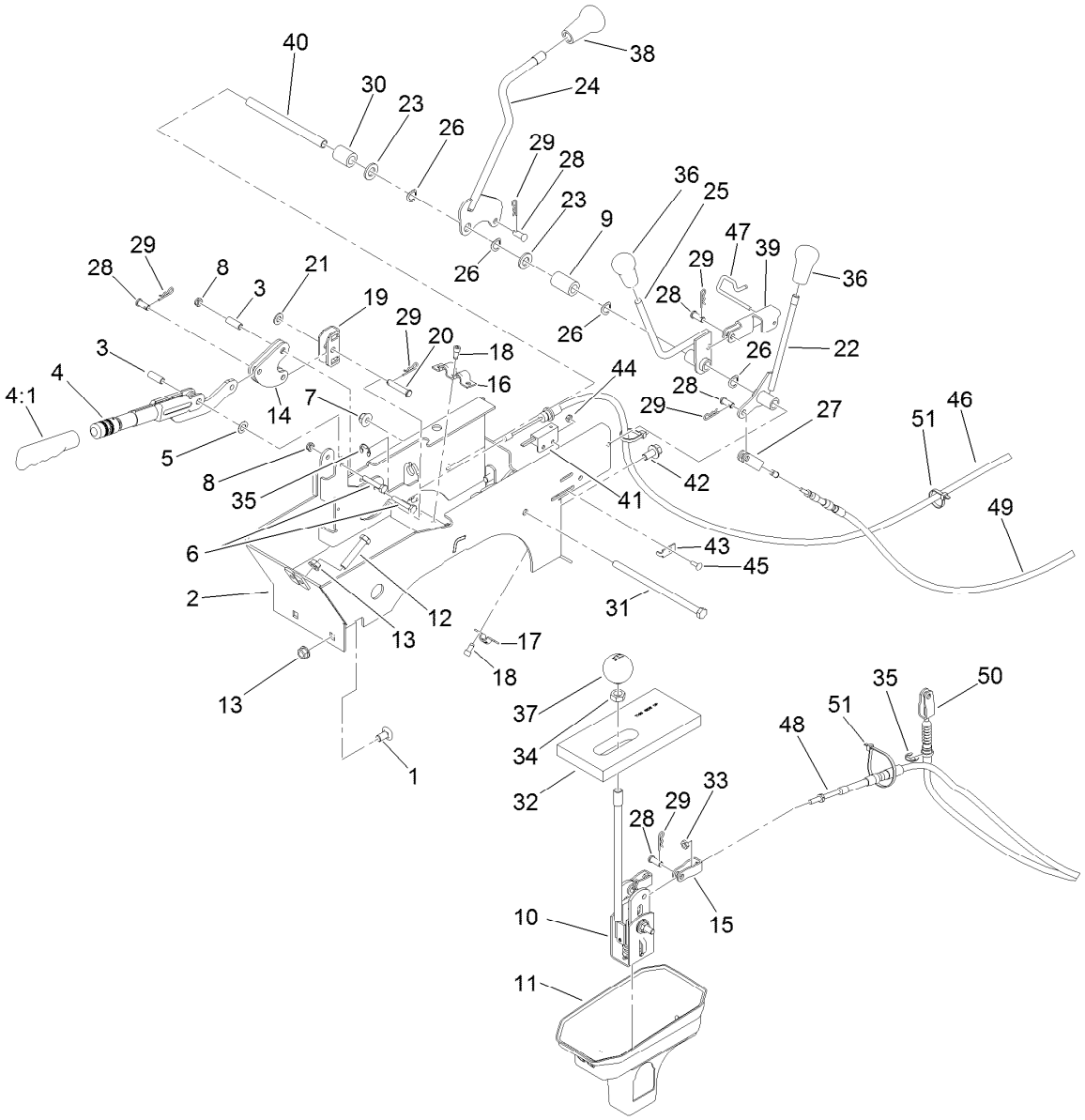


# Console Assembly

| Ref. | Part Number | Qty. | Description |
|---|---|---|---|
| 1 | 3231-21 | 2 | Screw-CARR |
| 2 | 108-6914-03 | 1 | Support-Lever |
| 3 | 114402 | 2 | Spacer |
| 4 | 127-8863 | 1 | Lever-Brake, Park |
| 4:1 | 127-8864 | 1 | Grip-Handle |
| 5 | 3290-477 | 1 | Washer-Curved |
| 6 | 321-9 | 2 | Screw-HH |
| 7 | 104-8301 | 1 | Nut-HF, NI |
| 8 | 3296-56 | 2 | Nut-Lock, NI |
| 9 | 120-5037 | 1 | Spacer |
| 10 | 106-7887 | 1 | Shift ASM |
| 11 | 106-2376 | 1 | Boot-Shift, Lower |
| 12 | 323-10 | 2 | Screw-HH |
| 13 | 3290-357 | 4 | Nut-HHF, Whiz |
| 14 | 106-7814 | 2 | Bellcrank |
| 15 | 87-2310 | 2 | Clevis-Cable |
| 16 | 87-4960 | 1 | Clamp-Cable |
| 17 | 87-4340 | 1 | Clamp-Cable |
| 18 | 65-5220 | 5 | Screw-HSH, Thread Forming |
| 19 | 87-3480 | 1 | Bracket-Equalizer, Cable |

| Ref. | Part Number | Qty. | Description |
|---|---|---|---|
| 20 | 94-3829 | 1 | Pin-Clevis |
| 21 | 3256-23 | 1 | Washer-Plain |
| 22 | 106-7828 | 1 | Lever |
| 23 | 33096-00 | 2 | Washer-Flat |
| 24 | 131-3479 | 1 | Lever-Lock, Differential |
| 25 | 106-7960 | 1 | Lever-HYD |
| 26 | 3290-221 | 4 | Washer-Spring |
| 27 | 87-7160 | 1 | Clevis-Cable |
| 28 | 283-62 | 6 | Pin-Clevis |
| 29 | 3290-307 | 7 | Pin-Cotter |
| 30 | 66-6501 | 1 | Spacer-Wheel |
| 31 | 323-36 | 1 | Screw-HH |
| 32 | 87-6570 | 1 | Seal-Boot, Lower |
| 33 | 3220-1 | 2 | Nut-Jam |
| 34 | 3218-18 | 1 | Nut-Jam |
| 35 | 32120-47 | 3 | Ring-Retaining, External |
| 36 | 106-7903 | 2 | Knob-Control |
| 37 | 87-6720 | 1 | Knob-Shift |
| 38 | 106-7952 | 1 | Knob |
| 39 | 115-2250 | 1 | Link |
| 40 | 106-7833 | 1 | Spacer |

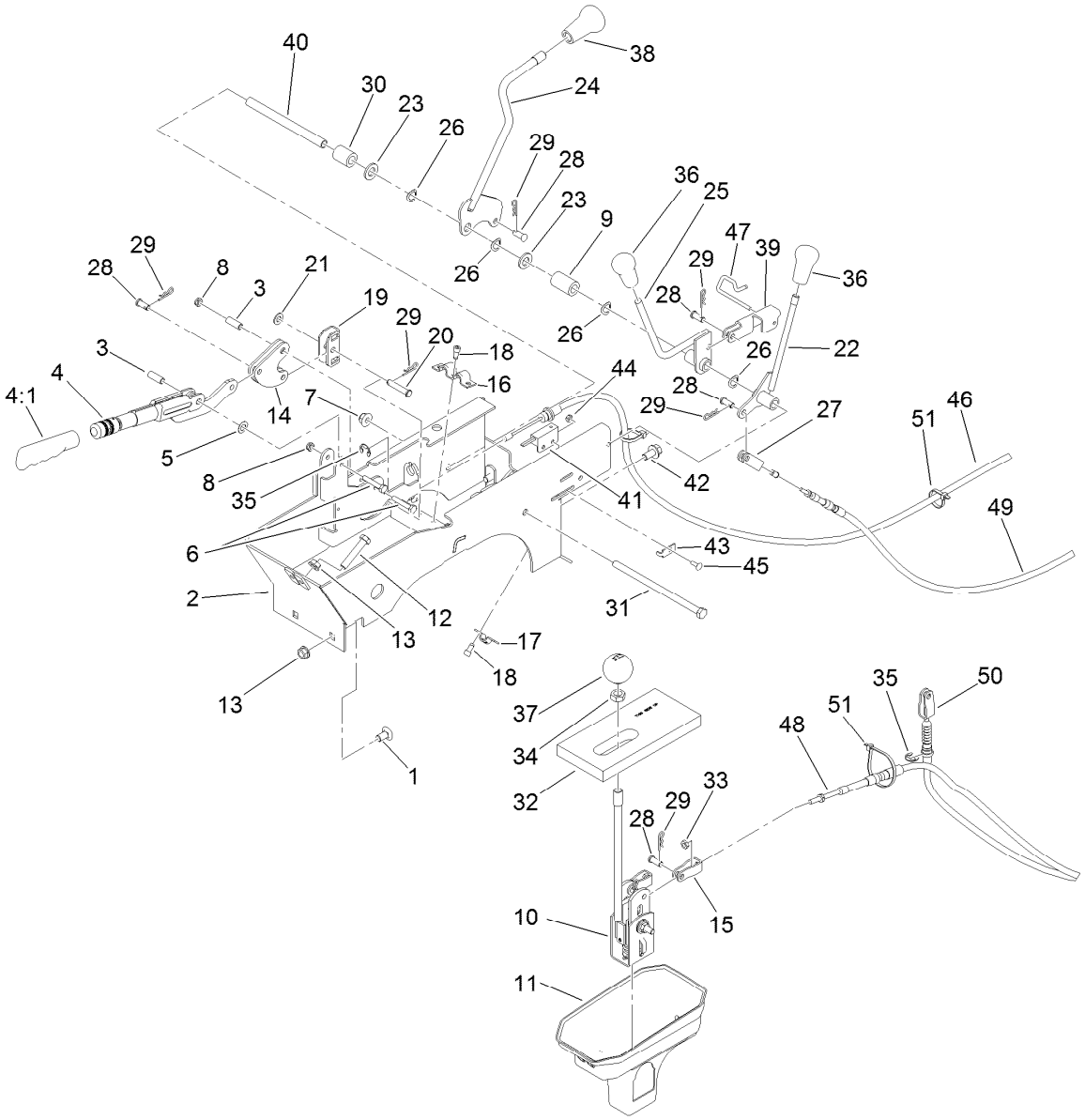


# Console Assembly (continued)

| Ref. | Part Number | Qty. | Description |
|---|---|---|---|
| 41 | 100-1270 | 1 | Switch-Proximity |
| 42 | 3234-12 | 2 | Screw-HHF |
| 43 | 100-4872 | 1 | Plate-Switch, Neutral |
| 44 | 3296-12 | 1 | Nut-Lock, NI |
| 45 | 3229-34 | 1 | Screw-CARR |
| 46 | 115-2283 | 2 | Cable-Brake, Park |

| Ref. | Part Number | Qty. | Description |
|---|---|---|---|
| 47 | 115-2350 | 1 | Pin-Retainer |
| 48 | 115-7811 | 2 | Cable-Selector, Gear |
| 49 | 115-7812 | 1 | Cable-Hi Low |
| 50 | 115-2287 | 1 | Cable-Lock, Differential |
| 51 | 3290-379 | 5 | Tie-Cable |

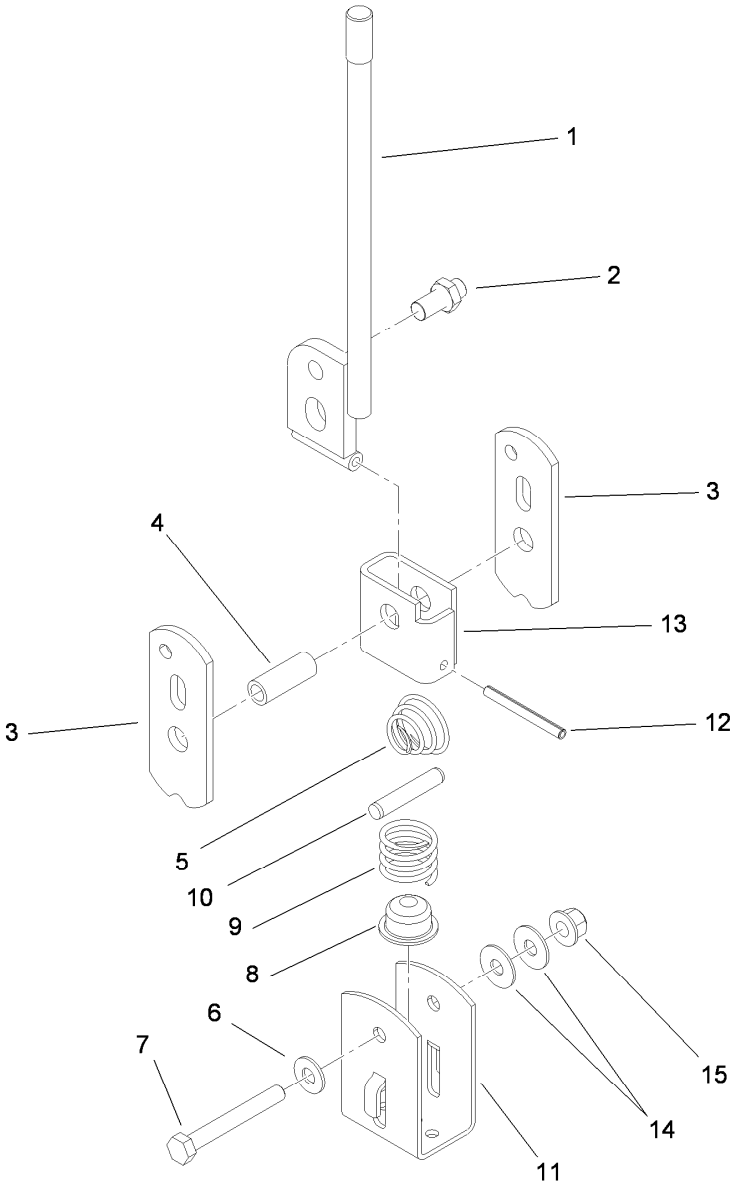


# Shift Assembly No. 106-7887

| Ref. | Part Number | Qty. | Description |
|---|---|---|---|
| 1 | 131-3469 | 1 | Lever-Shift |
| 2 | 87-3650 | 1 | Pin-Shift |
| 3 | 87-3540 | 2 | Link-Shift |
| 4 | 87-2520 | 1 | Tube-Pivot |
| 5 | 87-2900 | 1 | Spring-Compression |
| 6 | 87-8640 | 1 | Washer-Flat |
| 7 | 322-12 | 1 | Screw-HH |
| 8 | 87-3530 | 1 | Button-Shifter |
| 9 | 87-3660 | 1 | Spring-Compression |
| 10 | 3290-507 | 1 | Pin-Dowel |
| 11 | 87-3520 | 1 | Clevis |
| 12 | 32121-48 | 1 | Pin-Spring |
| 13 | 87-6040 | 1 | Bracket-Shifter |
| 14 | 3290-456 | 2 | Washer-Belleville |
| 15 | 104-8300 | 1 | Nut-HF, NI |

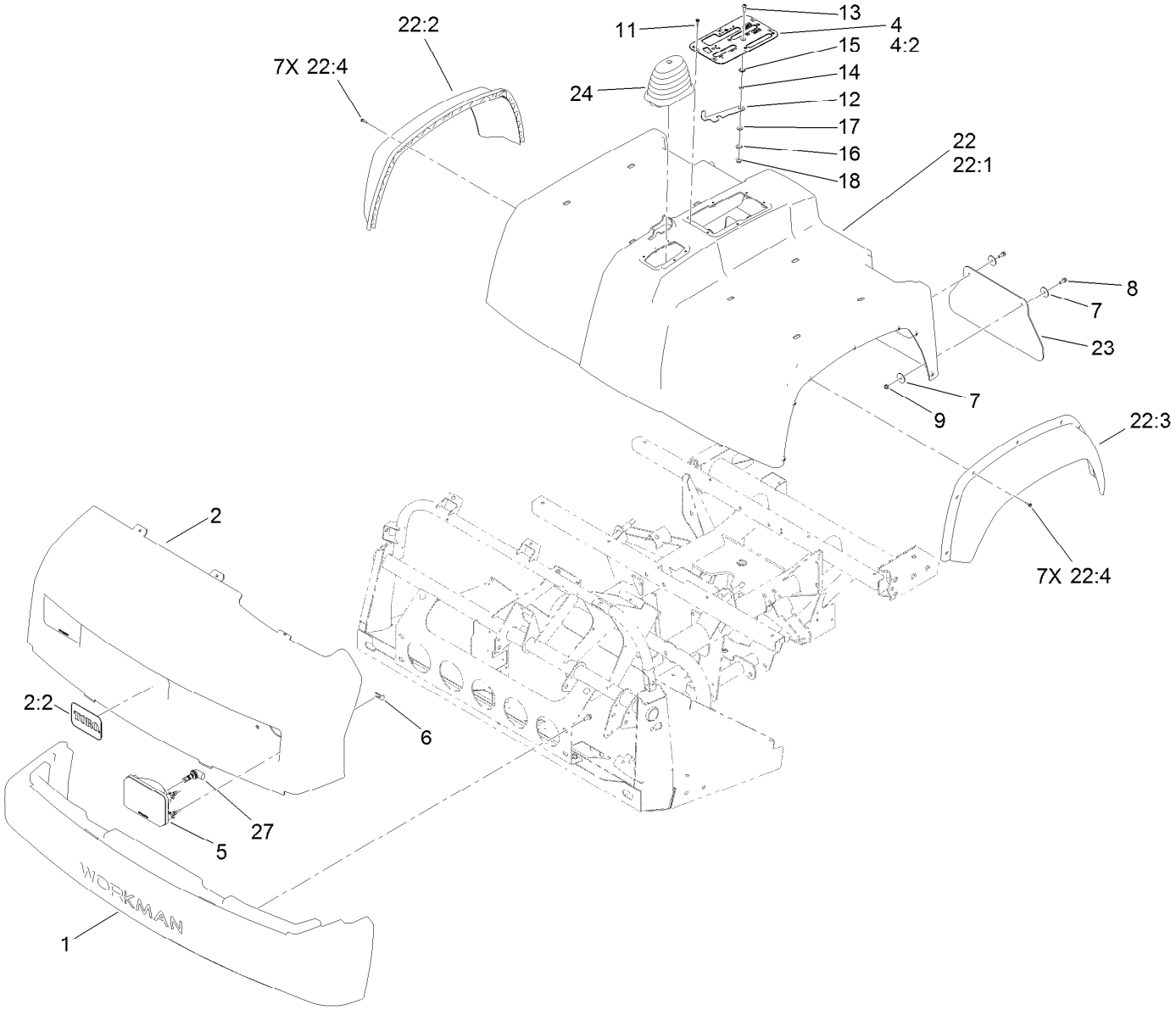


# Bumper, Hood and Seat Base Assembly

| Ref. | Part Number | Qty. | Description |
|---|---|---|---|
| 1 | 112-3185 | 1 | Bumper |
| 2 | 139-3382 | 1 | Hood ASM |
| 2:2 | 117-4950 | 1 | Decal |
| 4 | 106-7886 | 1 | Control Plate ASM |
| 4:2 | 106-2377 | 1 | Decal-Console |
| 5 | 132-6703 | 2 | Headlight ASM |
| 6 | 114-8341 | 6 | Clip-Speed |
| 7 | 3256-55 | 8 | Washer-Flat |
| 8 | 3234-4 | 4 | Screw-HHF |
| 9 | 104-7201 | 4 | Nut-HF |
| 11 | 98-1375 | 6 | Screw-HWH |
| 12 | 106-7984 | 1 | Lever-Detent |
| 13 | 3274-55 | 1 | Screw-HSBH |

| Ref. | Part Number | Qty. | Description |
|---|---|---|---|
| 14 | 82-4240 | 1 | Spacer-Bearing |
| 15 | 94-8196 | 1 | Washer-Nylon |
| 16 | 3290-221 | 1 | Washer-Spring |
| 17 | 3256-23 | 1 | Washer-Plain |
| 18 | 104-8300 | 1 | Nut-HF, NI |
| 22 | 133-0566 | 1 | Seatbase ASM |
| 22:1 | 132-6798 | 1 | Seatbase |
| 22:2 | 114-8407 | 1 | Fender-Front, RH |
| 22:3 | 114-8408 | 1 | Fender-Front, LH |
| 22:4 | 117-5036 | 14 | Screw-Plastic, HWH |
| 23 | 106-2378 | 2 | Mudflap |
| 24 | 117-8063 | 1 | Boot-Shift |
| 27 | 133-0574 | 2 | Bulb-LED |

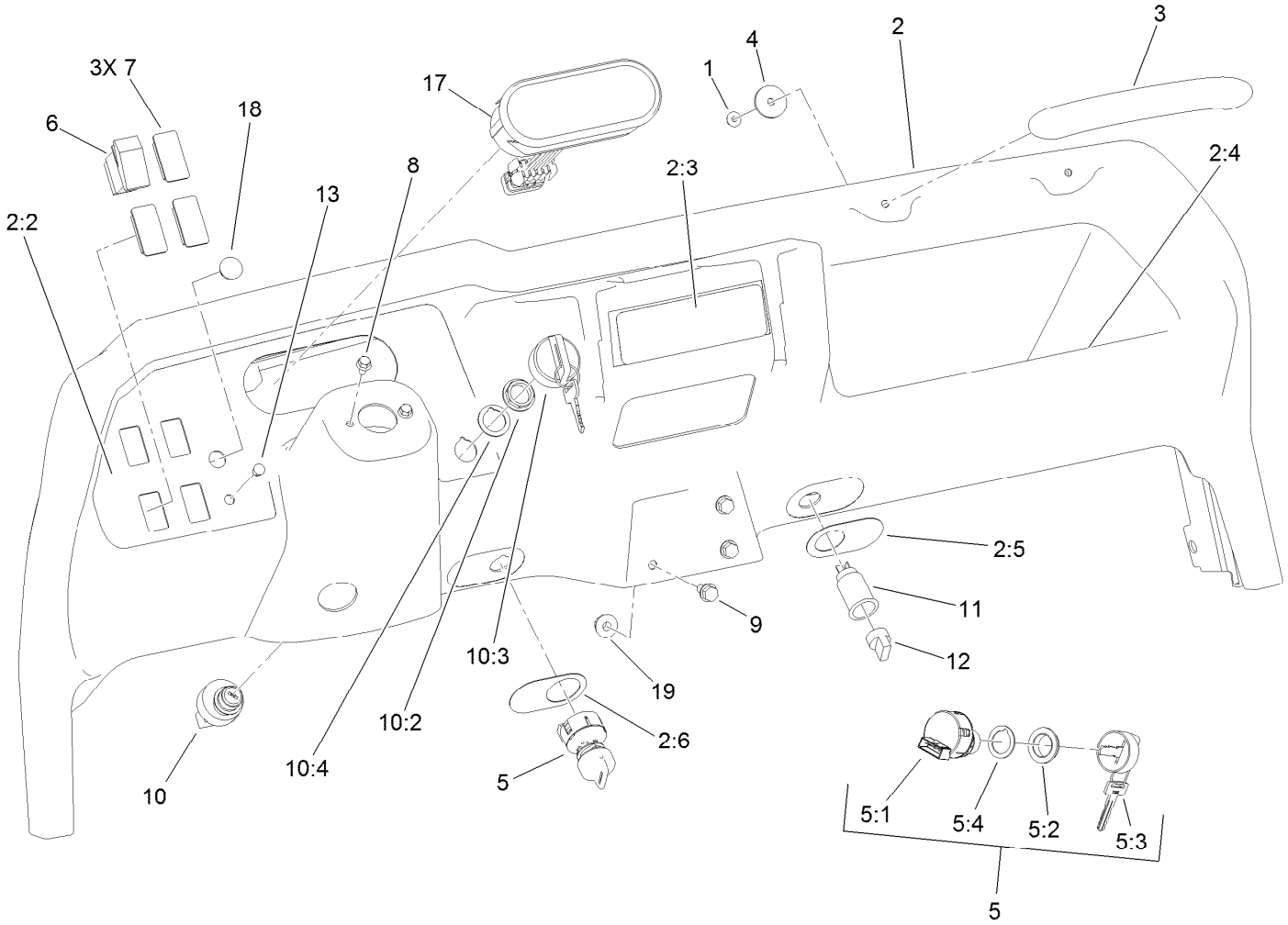


# Dash Assembly

| Ref. | Part Number | Qty. | Description |
|---|---|---|---|
| 1 | 104-7201 | 2 | Nut-HF |
| 2 | 115-7912 | 1 | Dash ASM |
| 2:2 | 115-2281 | 1 | Decal-Dash |
| 2:3 | 121-9776 | 1 | Decal-Danger, Vehicle (CE) |
| 2:4 | 115-2282 | 1 | Decal-Warning, Dash |
| 2:5 | 106-2353 | 1 | Decal-Powerpoint |
| 2:6 | 106-2355 | 1 | Decal-Switch, Supervisor |
| 3 | 117-4948 | 1 | Handle-Grab |
| 4 | 103995 | 2 | Washer |
| 5 | 110-2580 | 1 | Switch-Key, Supervisor |
| 5:1 | | 1 | Switch-Key ● |
| 5:2 | 108-8660 | 1 | Nut-Mounting |
| 5:3 | 110-5221 | 1 | Set-Key, Supervisor |
| 5:4 | 108-8659 | 1 | Washer-Backup |

| Ref. | Part Number | Qty. | Description |
|---|---|---|---|
| 6 | 95-8999 | 1 | Switch |
| 7 | 99-7420 | 3 | Plug-Hole |
| 8 | 33103-012 | 2 | Screw-HHF |
| 9 | 3234-5 | 3 | Screw-HHF |
| 10 | 106-5269 | 1 | Ignition Switch ASM |
| 10:2 | 108-8660 | 1 | Nut-Mounting |
| 10:3 | 106-5270 | 1 | Ignition Key Set |
| 10:4 | 108-8659 | 1 | Washer-Backup |
| 11 | 99-7411 | 1 | Point-Power |
| 12 | 99-7416 | 1 | Cap |
| 13 | 104-9368 | 1 | Plug-Dome |
| 17 | 120-4808 | 1 | Cluster-Instrument |
| 18 | 94-5627 | 1 | Plug |
| 19 | 104-8300 | 3 | Nut-HF, NI |

● Not serviced separately

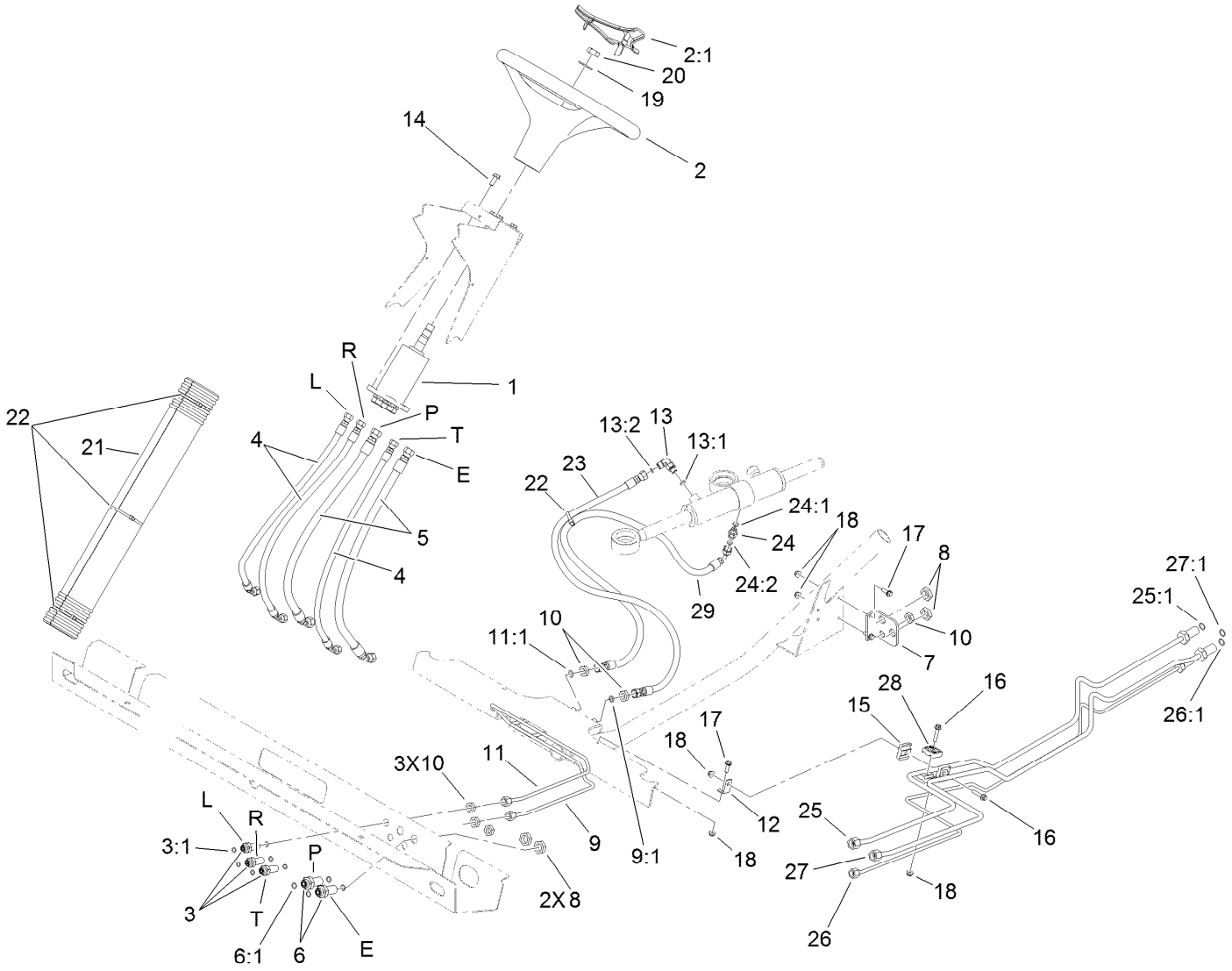


# Steering Hydraulic Assembly

| Ref. | Part Number | Qty. | Description |
|---|---|---|---|
| 1 | 120-4813 | 1 | Pump-Steering |
| 2 | 98-1471 | 1 | Wheel-Steering |
| 2:1 | 98-1468 | 1 | Cover-Wheel, Steering |
| 3 | 94-1444 | 3 | Union-Bulkhead |
| 3:1 | 237-21 | 2 | O-Ring |
| 4 | 106-7974 | 3 | Hose-HYD |
| 5 | 106-7975 | 2 | Hose-HYD |
| 6 | 340-71 | 2 | Fitting-Straight, Bulkhead |
| 6:1 | 237-22 | 2 | O-Ring |
| 7 | 106-7801-03 | 1 | Bracket-Line, Steering |
| 8 | 340-70 | 4 | Nut-Lock |
| 9 | 106-7804 | 1 | Tube-HYD |
| 9:1 | 237-21 | 1 | O-Ring |
| 10 | 3219-10 | 6 | Nut-Hex |
| 11 | 106-7806 | 1 | Tube-HYD |
| 11:1 | 237-21 | 1 | O-Ring |
| 12 | 106-7807 | 1 | Bracket-Line, Steering |
| 13 | 340-132 | 1 | Fitting-Elbow, 90 DEG |
| 13:1 | 237-78 | 1 | O-Ring |
| 13:2 | 237-21 | 1 | O-Ring |
| 14 | 98-7977 | 4 | Screw-HHF |

| Ref. | Part Number | Qty. | Description |
|---|---|---|---|
| 15 | 106-7839 | 2 | Clamp-Tube |
| 16 | 3234-21 | 2 | Screw-HHF |
| 17 | 3234-4 | 3 | Screw-HHF |
| 18 | 104-7201 | 5 | Nut-HF |
| 19 | 3256-27 | 1 | Washer-Flat |
| 20 | 3296-33 | 1 | Nut-Lock, NI |
| 21 | 106-6713 | 1 | Cover-Lines, Steering |
| 22 | 3290-379 | 4 | Tie-Cable |
| 23 | 108-6505 | 1 | Hose-HYD |
| 24 | 340-92 | 1 | Fitting-Straight |
| 24:1 | 237-78 | 1 | O-Ring |
| 24:2 | 237-21 | 1 | O-Ring |
| 25 | 115-7701 | 1 | Tube-HYD |
| 25:1 | 237-22 | 1 | O-Ring |
| 26 | 115-7702 | 1 | Tube-HYD |
| 26:1 | 237-22 | 1 | O-Ring |
| 27 | 115-7703 | 1 | Tube-HYD |
| 27:1 | 237-21 | 1 | O-Ring |
| 28 | 56-7973 | 2 | Clamp-Tube |
| 29 | 117-4861 | 1 | Hose-HYD |

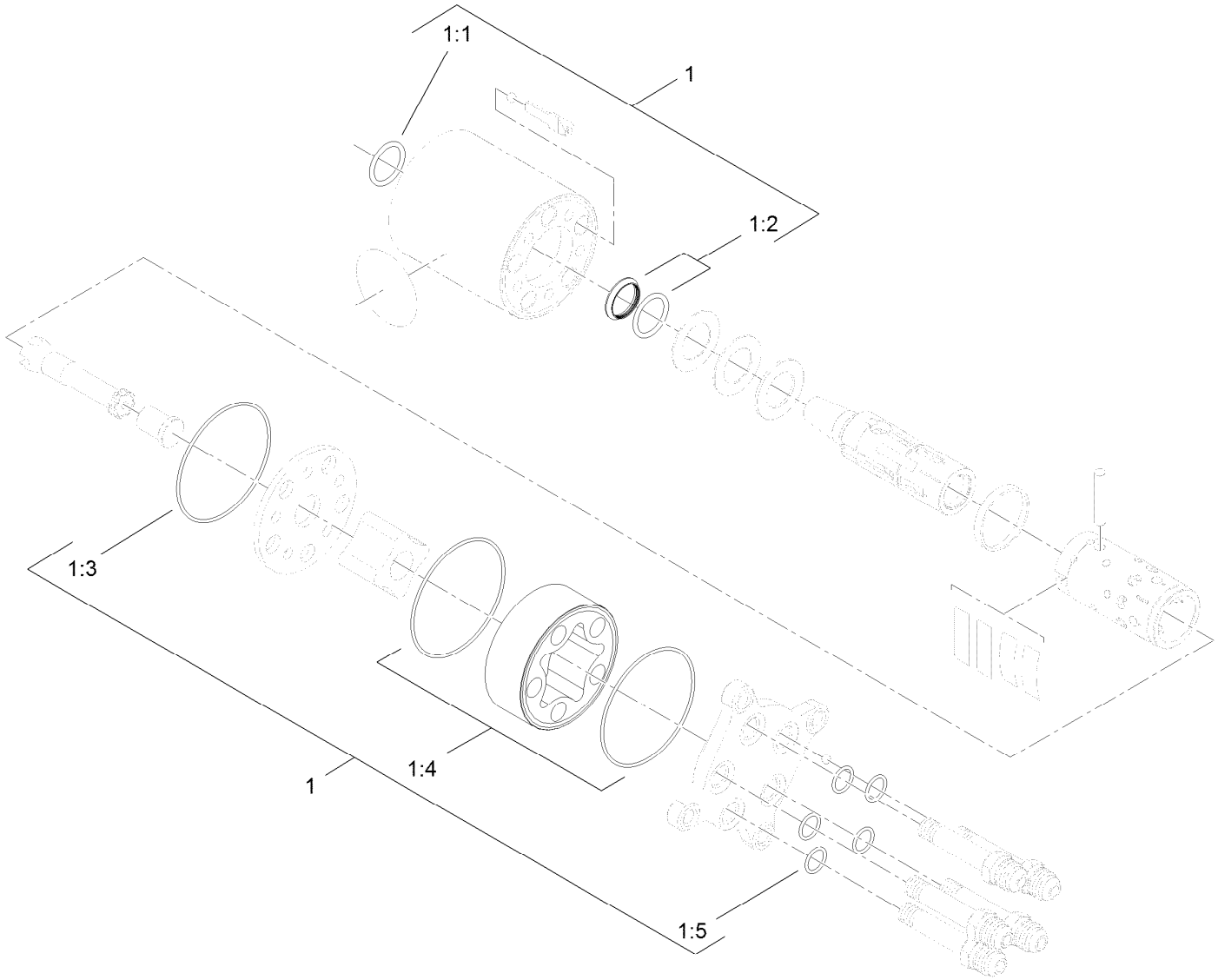


# Steering Valve Assembly No. 120-4813

| *Ref.* | *Part Number* | *Qty.* | *Description* |
|---|---|---|---|
| 1 | 106-6716 | 1 | Seal Kit |
| 1:1 | | 1 | Ring-Seal, Dust ● |
| 1:2 | | 1 | Seal-Shaft ● |
| 1:3 | | 1 | O-Ring ● |
| 1:4 | | 2 | O-Ring ● |
| 1:5 | | 5 | O-Ring ● |

● Not serviced separately

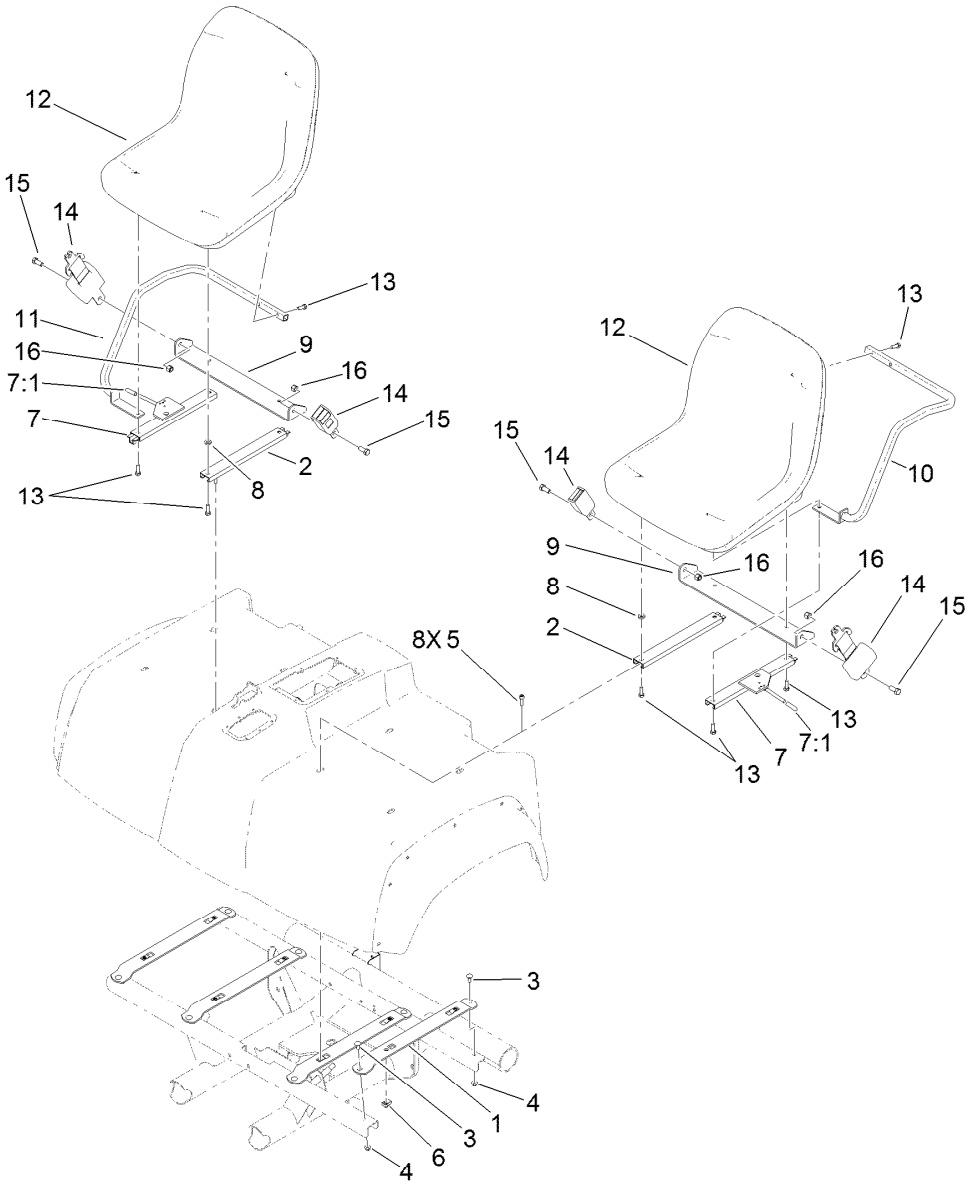


# Seat Assembly

| Ref. | Part Number | Qty. | Description |
|---|---|---|---|
| 1 | 115-2435-03 | 4 | Bracket-Seat |
| 2 | 119-0655 | 2 | Adjuster-Seat, Non Locking |
| 3 | 3230-1 | 8 | Bolt-CARR |
| 4 | 104-8300 | 8 | Nut-HF, NI |
| 5 | 3274-22 | 8 | Screw-HSH |
| 6 | 115-7721 | 8 | Nut-Clip, U |
| 7 | 121-9763 | 2 | Adjuster-Seat, Locking |
| 7:1 | 2410-49 | 1 | Cap-Vinyl |
| 8 | 104-7658 | 2 | Spacer |

| Ref. | Part Number | Qty. | Description |
|---|---|---|---|
| 9 | 119-0727-03 | 2 | Bracket-Belt, Seat |
| 10 | 119-0731-03 | 1 | Armrest-LH |
| 11 | 119-0732-03 | 1 | Armrest-RH |
| 12 | 133-0577 | 2 | Seat ASM |
| 13 | 33114-030 | 12 | Screw-HH |
| 14 | 110-0413 | 2 | Seatbelt-Retractable |
| 15 | 3212-4 | 4 | Screw-HH |
| 16 | 3296-7 | 4 | Nut-Lock |

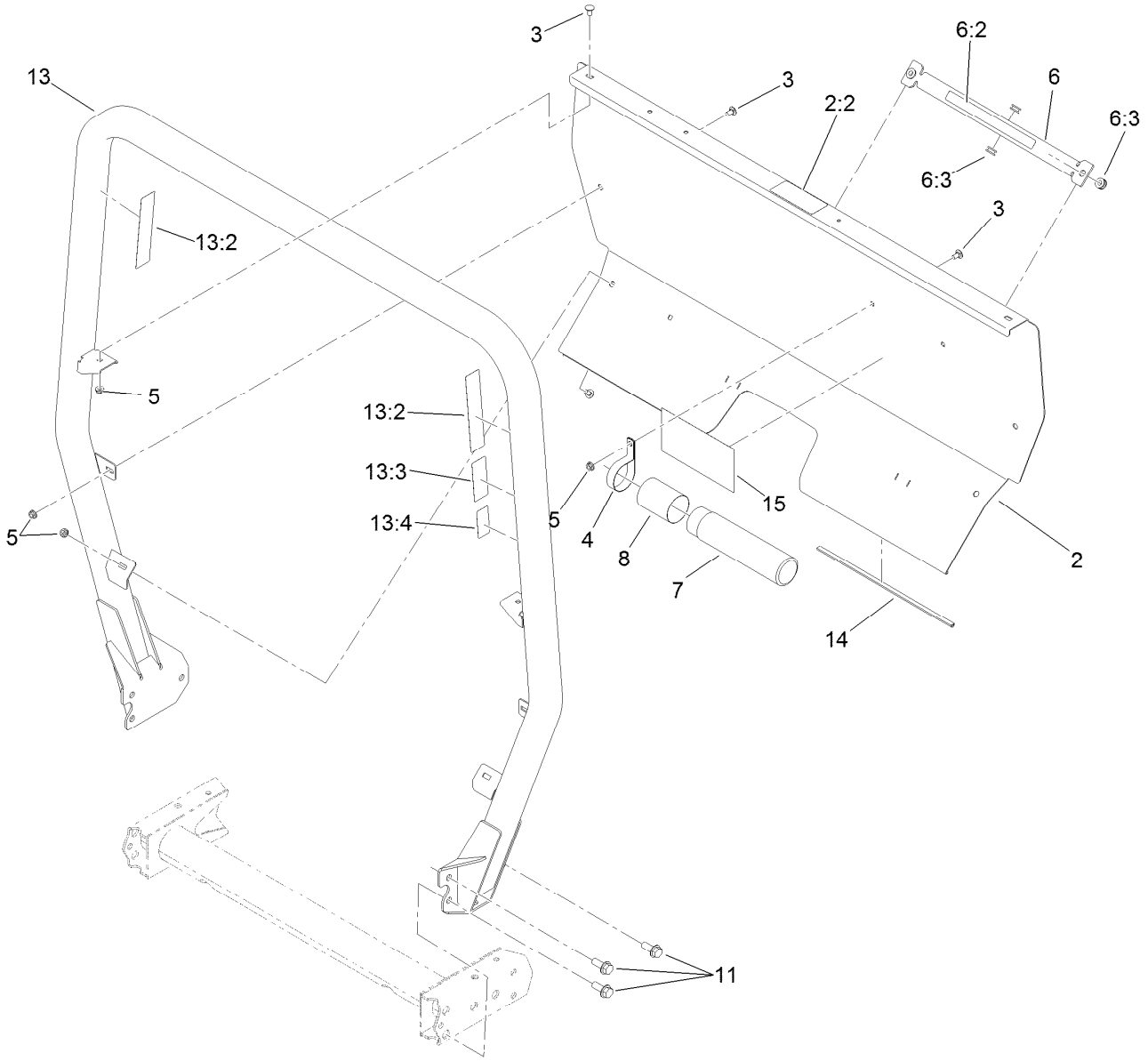


# Roll-Over Protection System Assembly

| Ref. | Part Number | Qty. | Description |
|---|---|---|---|
| 2 | 115-2213 | 1 | ROPS Cover ASM |
| 2:2 | 105-4215 | 1 | Decal-Caution |
| 3 | 3230-18 | 8 | Screw-CARR |
| 4 | 2412-133 | 2 | Clamp-R |
| 5 | 32128-20 | 8 | Nut-HF |
| 6 | 105-7960 | 1 | Bed Support ASM |
| 6:2 | 93-9852 | 1 | Decal-Warning |
| 6:3 | 92-5972 | 4 | Grommet-Rubber |
| 7 | 104-7050 | 1 | Tube-Manual |

| Ref. | Part Number | Qty. | Description |
|---|---|---|---|
| 8 | 104-7048 | 1 | Cap-Housing |
| 11 | 3234-38 | 6 | Screw-HHF |
| 13 | 115-7910 | 1 | ROPS ASM |
| 13:2 | 106-7767 | 2 | Decal-ROPS |
| 13:3 | 93-9850 | 1 | Decal-ROPS, CE |
| 13:4 | 117-4969 | 1 | Decal-ROPS, ISO |
| 14 | 127-7382 | 2 | Seal-ROPS |
| 15 | 115-7814 | 1 | Decal-Reference, Quick |

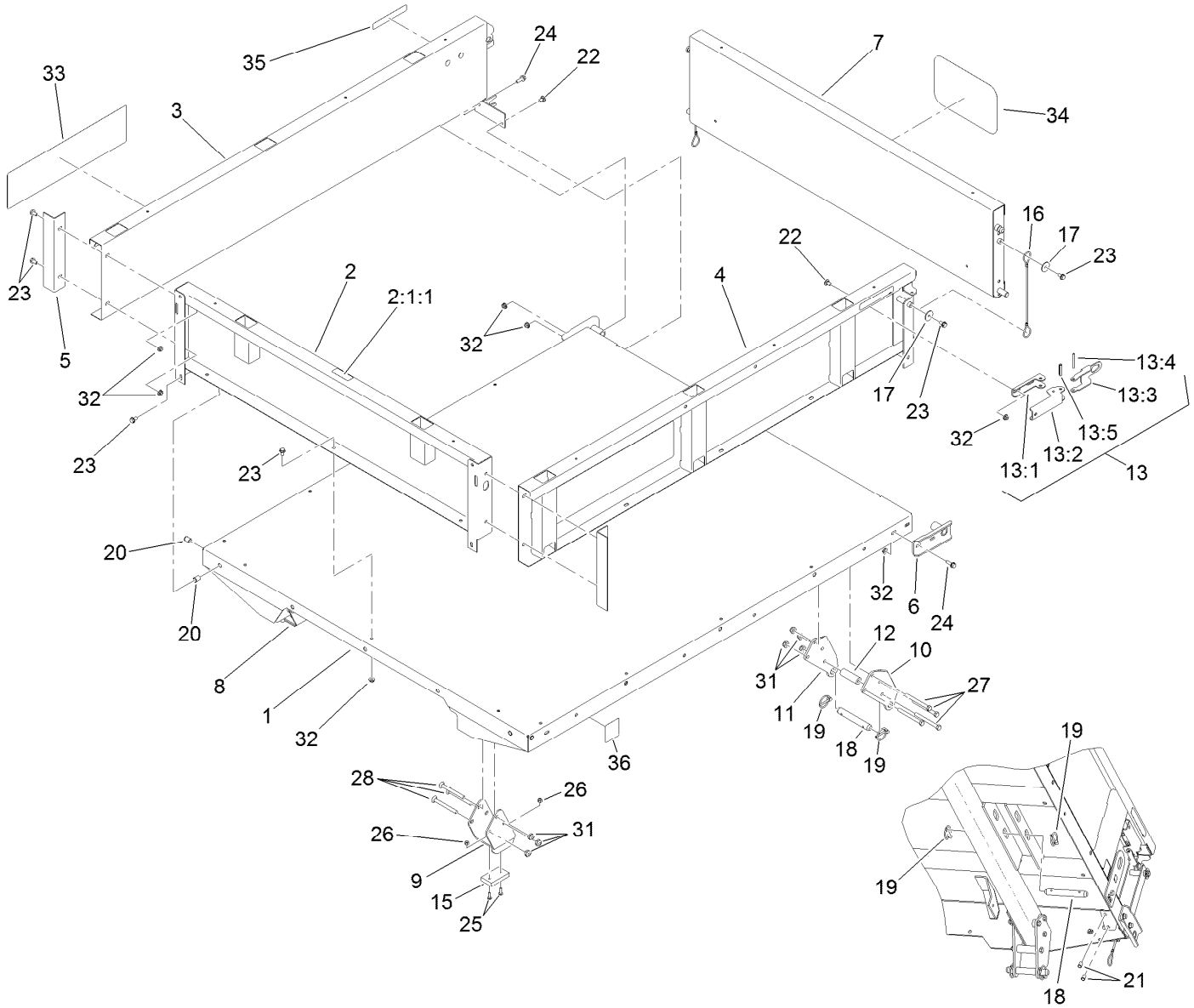


# Full Bed and Side Panel Assembly

| Ref. | Part Number | Qty. | Description |
|---|---|---|---|
| 1 | 93-9724-03 | 1 | Flatbed-Full |
| 2 | 133-0645 | 1 | Front Panel ASM |
| 2:1:1 | 115-7739 | 1 | Decal-No Riders |
| 3 | 133-0617 | 1 | Panel-Side, RH |
| 4 | 133-0616 | 1 | Panel-Side, LH |
| 5 | 92-1320-03 | 2 | Angle-Side |
| 6 | 92-1265-03 | 2 | Bracket-Pivot |
| 7 | 133-0644 | 1 | Tailgate |
| 8 | 106-2423-03 | 1 | Bracket-Spacer, RH |
| 9 | 106-2422-03 | 1 | Bracket-Spacer, LH |
| 10 | 93-9720-03 | 2 | Bracket-Pivot, Long (LH) |
| 11 | 93-9721-03 | 2 | Bracket-Pivot, Long (RH) |
| 12 | 93-9575 | 2 | Tube-Pivot, Flatbed |
| 13 | 99-1123 | 2 | Latch ASM |
| 13:1 | 92-1271 | 1 | Pivot-Latch |
| 13:2 | 99-1113 | 1 | Handle-Latch |
| 13:3 | 99-1112 | 1 | Plate-Retainer |
| 13:4 | 32121-78 | 1 | Pin-Roll |
| 13:5 | 32121-25 | 1 | Pin-Roll |
| 15 | 93-9719 | 2 | Block-Wear |

| Ref. | Part Number | Qty. | Description |
|---|---|---|---|
| 16 | 93-9595 | 2 | Lanyard |
| 17 | 3256-57 | 4 | Washer-Flat |
| 18 | 92-1233 | 4 | Pin-Clevis |
| 19 | 92-1298 | 8 | Pin-Lynch |
| 20 | 32148-7 | 4 | Nut-Clinch |
| 21 | 32148-6 | 4 | Nut-Clinch |
| 22 | 3230-18 | 6 | Screw-CARR |
| 23 | 3234-7 | 21 | Screw-HHF |
| 24 | 3234-29 | 6 | Screw-HHF |
| 25 | 3250-45 | 4 | Screw-SPH |
| 26 | 3296-42 | 4 | Nut-Lock, NI |
| 27 | 323-42 | 8 | Screw-HH |
| 28 | 3231-24 | 6 | Screw-CARR |
| 31 | 3296-44 | 14 | Nut-Lock, NI |
| 32 | 32128-20 | 27 | Nut-HF |
| 33 | 115-7915 | 2 | Decal |
| 34 | 105-4222 | 1 | Decal |
| 35 | 93-9868 | 2 | Decal-Caution |
| 36 | 93-9899 | 2 | Decal-Warning |

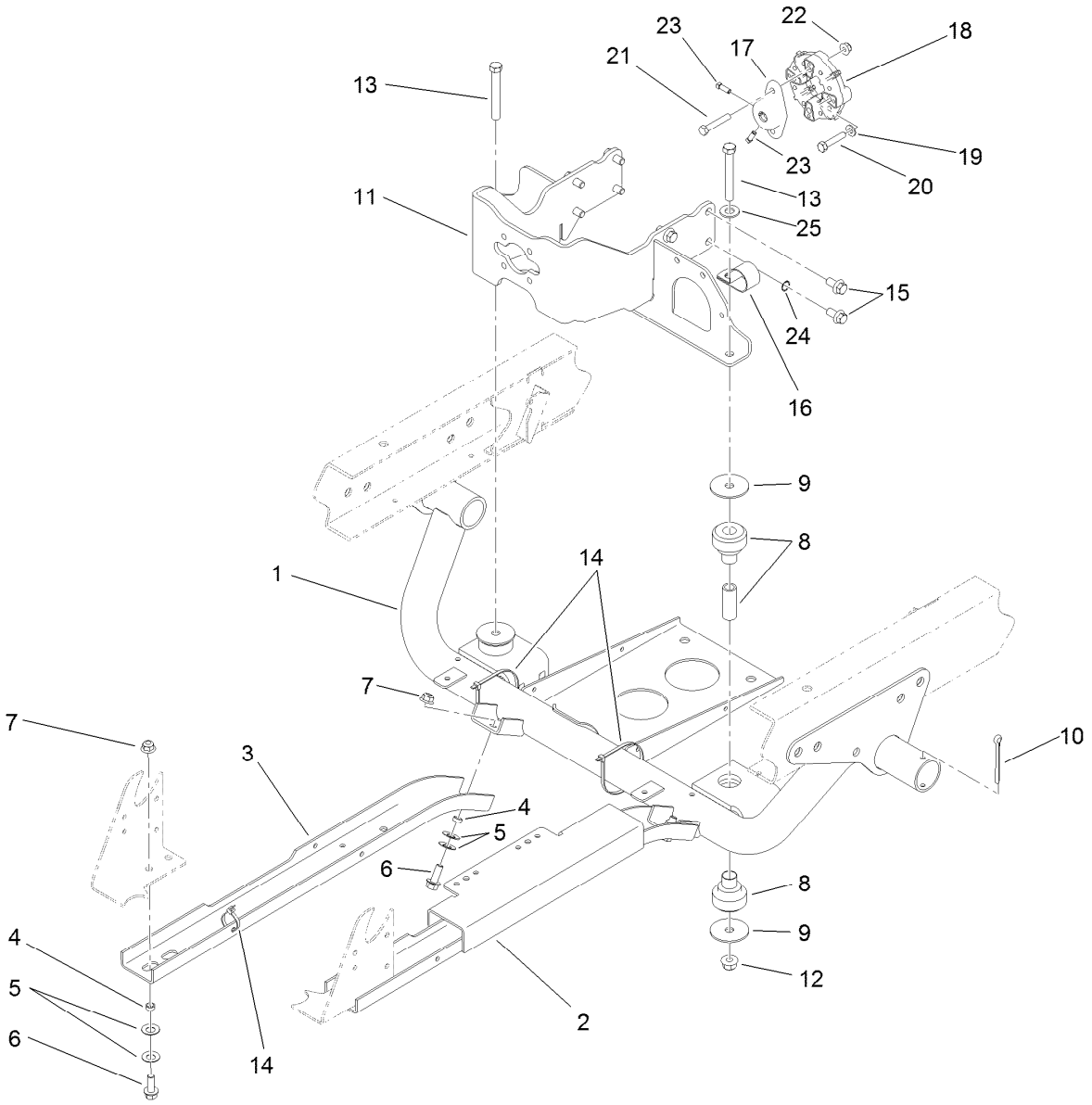


# Engine Sub Frame Assembly

| Ref. | Part Number | Qty. | Description |
|---|---|---|---|
| 1 | 119-9679-03 | 1 | Support-Engine |
| 2 | 115-2215-03 | 1 | Guard-LH |
| 3 | 87-4730-03 | 1 | Guard-Belly |
| 4 | 76-9100 | 6 | Spacer |
| 5 | 3290-413 | 12 | Washer-Belleville |
| 6 | 3234-11 | 6 | Screw-HHF |
| 7 | 104-8301 | 6 | Nut-HF, NI |
| 8 | 106-7865 | 2 | Mount-Engine |
| 9 | 87-5100 | 4 | Washer-Snubbing |
| 10 | 3272-37 | 2 | Pin-Cotter |
| 11 | 121-6259-03 | 1 | Mount-Pump, Engine |
| 12 | 114-8417 | 2 | Nut-HF, NI |
| 13 | 324-13 | 2 | Screw-HH |

| Ref. | Part Number | Qty. | Description |
|---|---|---|---|
| 14 | 3290-379 | 4 | Tie-Cable |
| 15 | 120-4839 | 8 | Screw-HHF |
| 16 | 2412-82 | 1 | Clamp-R |
| 17 | 115-2169 | 1 | Hub-Pump |
| 18 | 119-0652 | 1 | Coupler-Rubber |
| 19 | 3256-23 | 2 | Washer-Plain |
| 20 | 33114-040 | 2 | Screw-HH |
| 21 | 322-21 | 2 | Screw-HH |
| 22 | 104-8300 | 2 | Nut-HF, NI |
| 23 | 3241-6 | 2 | Screw-SQH |
| 24 | 3254-20 | 1 | Washer-Lock, Int |
| 25 | 3256-26 | 1 | Washer-Flat |

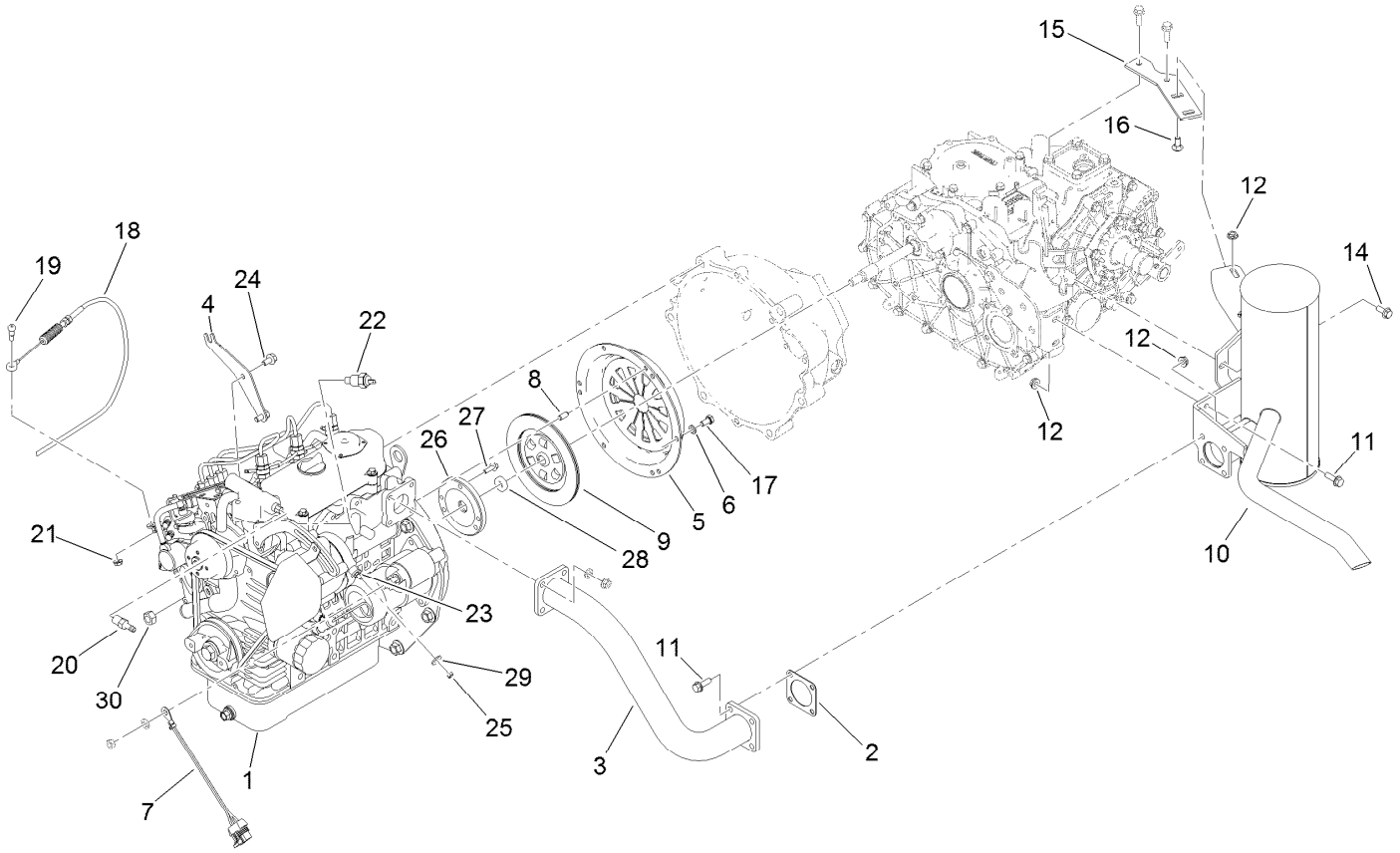


# Engine Assembly

| Ref. | Part Number | Qty. | Description |
|---|---|---|---|
| 1 | 127-9657 | 1 | Engine-Kubota, D902 |
| 2 | 105-4209 | 1 | Gasket-Muffler |
| 3 | 119-0860 | 1 | Tube-Exhaust |
| 4 | 120-4981-03 | 1 | Mount-Cable, Throttle |
| 5 | 87-4690 | 1 | Cover-Clutch |
| 6 | 3253-4 | 6 | Washer-Lock |
| 7 | 99-3441 | 1 | Harness-Wire, Fusible Link |
| 8 | 42-7160 | 3 | Pin |
| 9 | 87-4700 | 1 | Disc-Clutch |
| 10 | 127-7443 | 1 | Muffler |
| 11 | 3234-17 | 6 | Screw-HHF |
| 12 | 32128-20 | 8 | Nut-HF |
| 14 | 98-7977 | 1 | Screw-HHF |
| 15 | 105-9472 | 1 | Plate-Mount, Muffler |
| 16 | 3230-1 | 2 | Bolt-CARR |

| Ref. | Part Number | Qty. | Description |
|---|---|---|---|
| 17 | 33114-016 | 6 | Screw-HH |
| 18 | 120-4980 | 1 | Cable-Throttle |
| 19 | 119-4881 | 1 | Bolt-Shoulder |
| 20 | 115-1448 | 1 | Fitting-Straight |
| 21 | 32128-33 | 1 | Nut-HF |
| 22 | 120-4907 | 1 | Sensor-Temperature |
| 23 | 120-5075 | 1 | Sender-Temperature |
| 24 | 33104-016 | 2 | Screw-HHF |
| 25 | 33013-00 | 1 | Nut-Hex |
| 26 | 120-5006 | 1 | Holder-Bearing, Pilot |
| 27 | 33103-020 | 3 | Screw-HHF |
| 28 | 115-6870 | 1 | Bearing-Ball, Sealed |
| 29 | 3256-2 | 1 | Washer-Flat |
| 30 | 110-8815 | 1 | Nut-Hex |

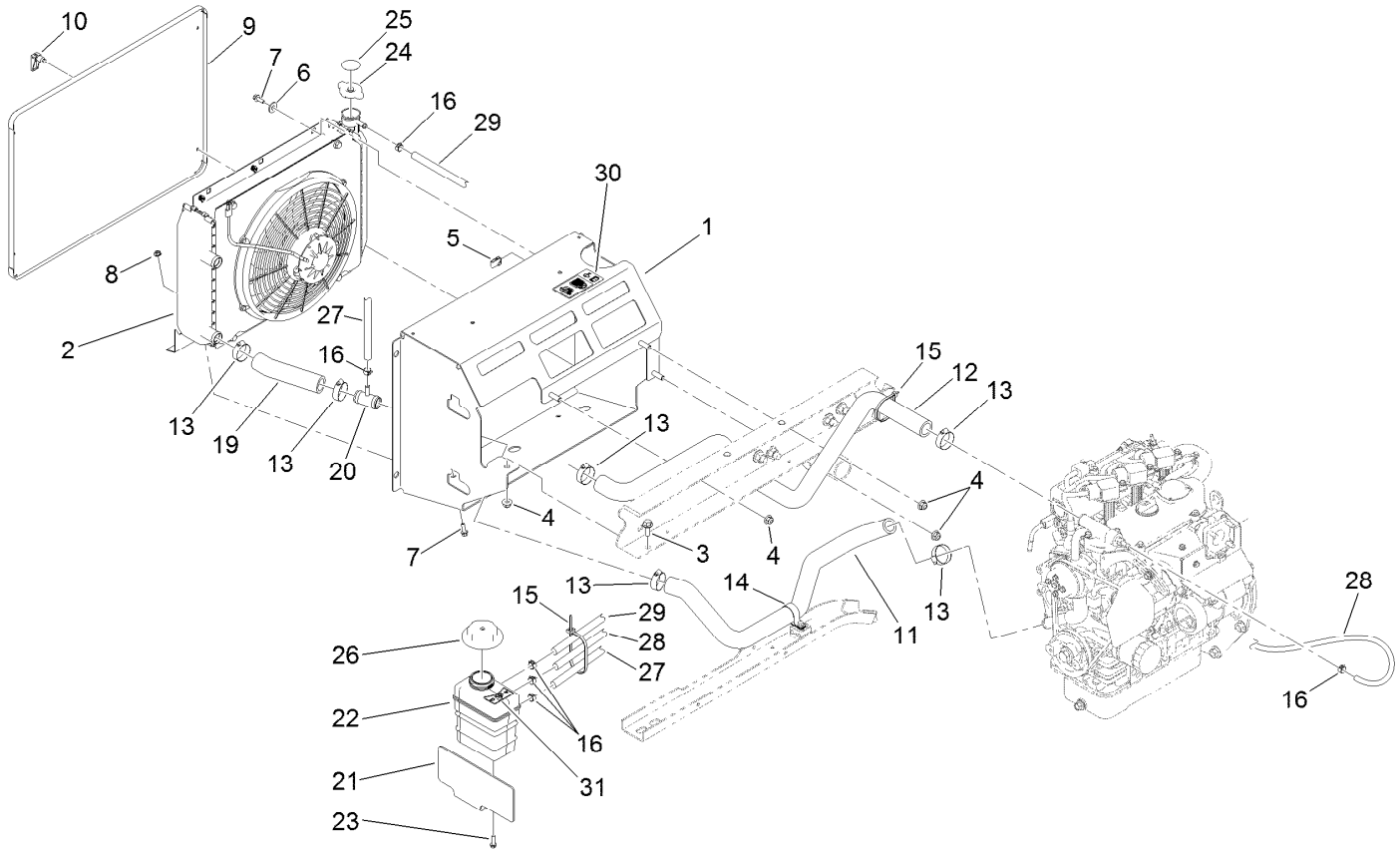


# Cooling System Assembly

| Ref. | Part Number | Qty. | Description |
|---|---|---|---|
| 1 | 115-2434 | 1 | Mount-Radiator |
| 2 | | 1 | Radiator ASM ● |
| 3 | 3234-11 | 1 | Screw-HHF |
| 4 | 104-8301 | 4 | Nut-HF, NI |
| 5 | 107069 | 2 | Clip |
| 6 | 3256-3 | 2 | Washer-Flat |
| 7 | 3234-4 | 4 | Screw-HHF |
| 8 | 32128-33 | 2 | Nut-HF |
| 9 | 115-2428-03 | 1 | Screen-Radiator |
| 10 | 74-5950 | 4 | Latch-Swell |
| 11 | 119-9487 | 1 | Hose-Coolant, Lower |
| 12 | 119-9486 | 1 | Hose-Coolant, Upper |
| 13 | 2412-34 | 6 | Clamp-Hose |
| 14 | 2412-74 | 1 | R-Clamp |
| 15 | 3290-379 | 4 | Tie-Cable |
| 16 | 92-2379 | 6 | Clamp-Hose |
| 19 | 120-4905 | 1 | Hose-Coolant, Lower |
| 20 | 120-4851 | 1 | Tee |
| 21 | 120-4906-03 | 1 | Plate-Mount, Tank |
| 22 | 120-4856 | 1 | Tank-Surge |
| 23 | 46-8091 | 2 | Screw-HWH |
| 24 | 120-4866 | 1 | Cap-System, Cooling |
| 25 | 106-6755 | 1 | Decal-Cap, Radiator |
| 26 | 120-4867 | 1 | Cap-Coolant, Threaded (15 PSI) |
| 27 | 120-5019 | 1 | Hose-Coolant |
| 28 | 120-5020 | 1 | Hose-Coolant |
| 29 | 120-5021 | 1 | Hose-Coolant |
| 30 | 121-6286 | 1 | Decal-Fill, Radiator |
| 31 | 121-6287 | 1 | Decal-Tank, Overflow |

● Not serviced separately

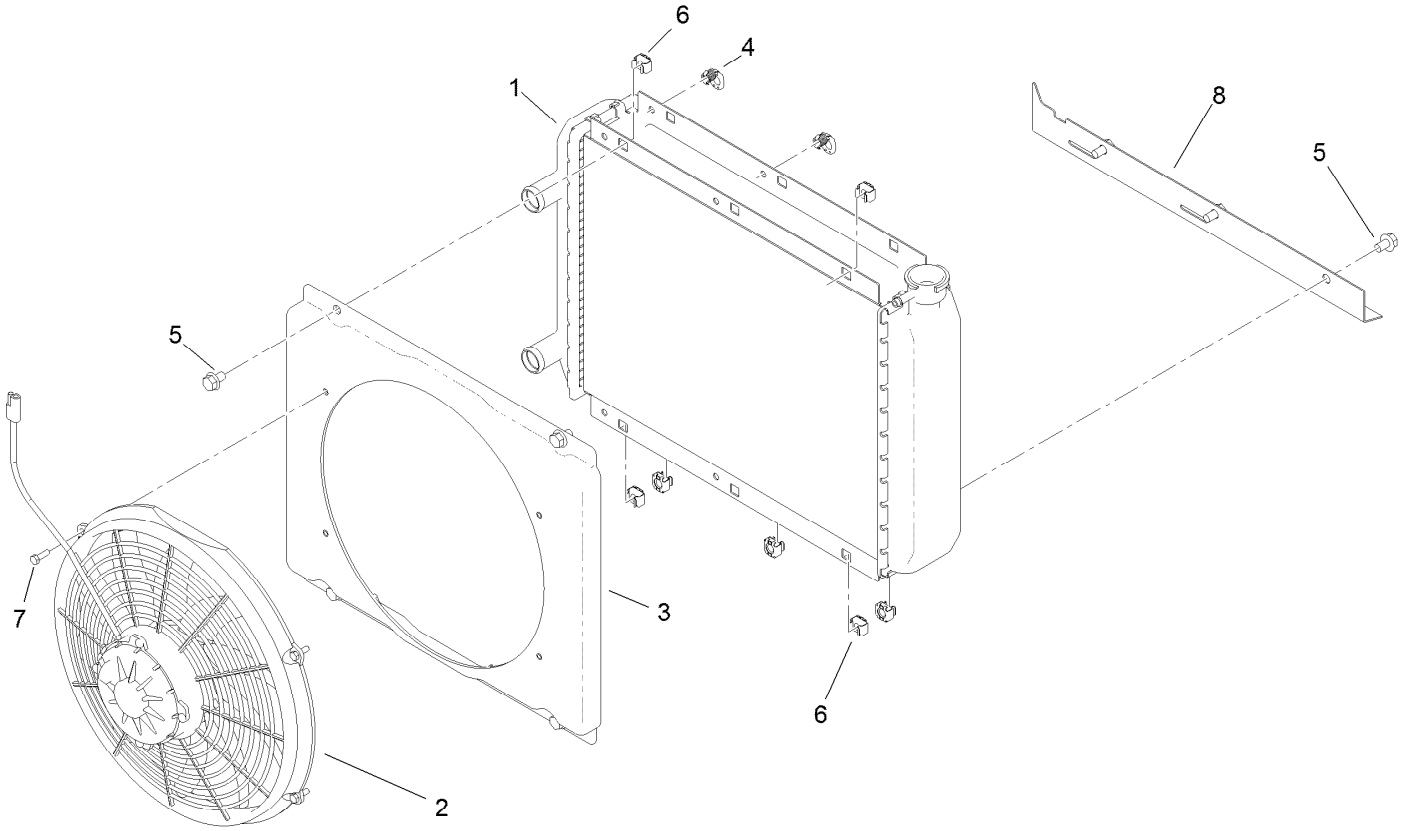


# Radiator Assembly

| Ref. | Part Number | Qty. | Description |
|---|---|---|---|
| 1 | 114-8384 | 1 | Radiator |
| 2 | 114-8385 | 1 | Fan-Electric |
| 3 | 114-8386 | 1 | Shroud |
| 4 | 114-8387 | 2 | Latch-Spring |
| 5 | 3234-30 | 7 | Screw-HHF |
| 6 | 703856 | 7 | Nut-Sq, Caged |
| 7 | 60-6910 | 4 | Screw-HH |
| 8 | 115-7765 | 1 | Plate-Mount, Lower |

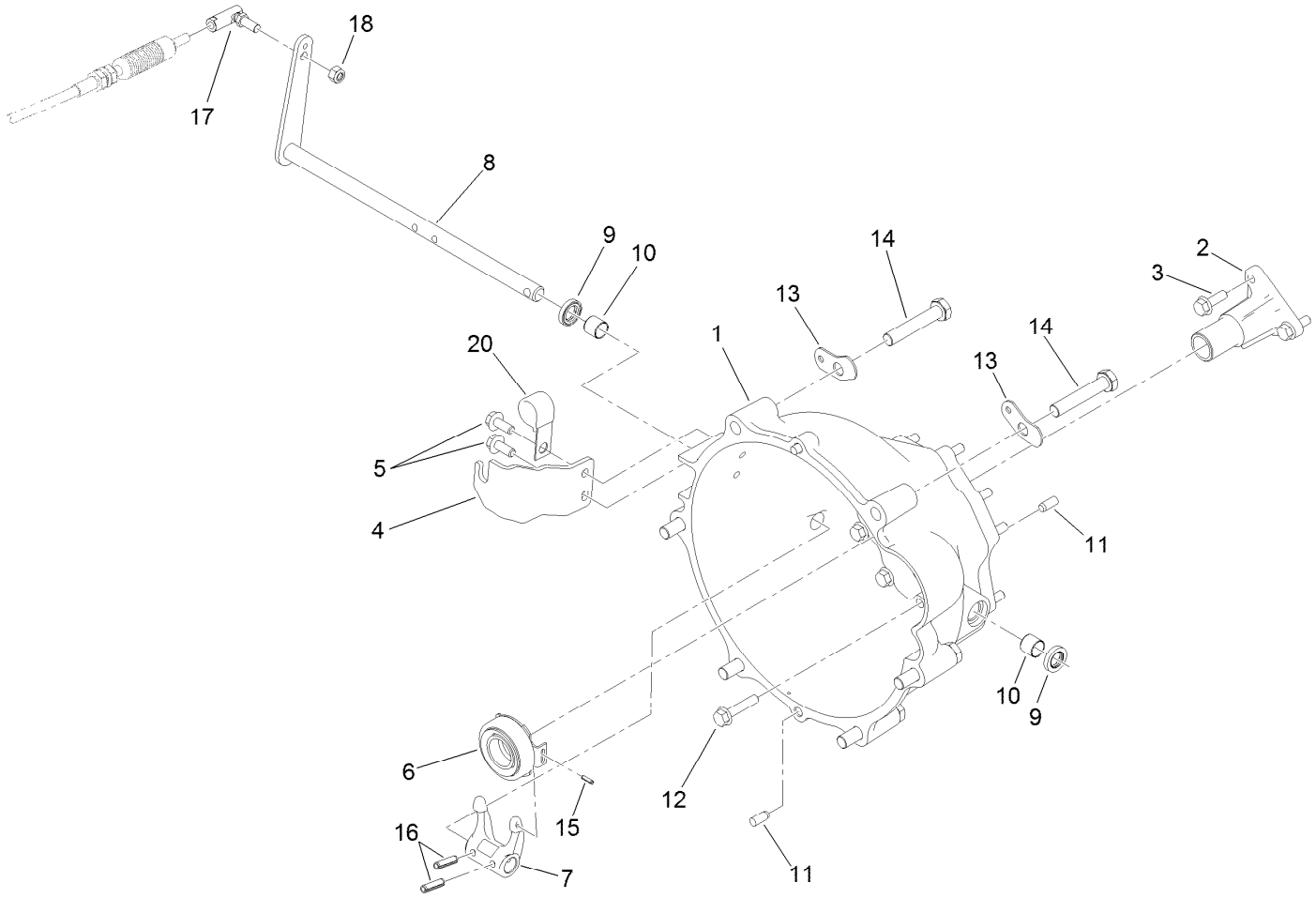


# Clutch Linkage Assembly

| Ref. | Part Number | Qty. | Description |
|---|---|---|---|
| 1 | 119-9498 | 1 | Bell Housing |
| 2 | 120-4886 | 1 | Guide-Release |
| 3 | 33104-025 | 3 | Screw-HHF |
| 4 | 115-2313 | 1 | Bracket-Cable, Clutch |
| 5 | 98-7977 | 2 | Screw-HHF |
| 6 | 110-2538 | 1 | Bearing-Release, Clutch |
| 7 | 87-5300 | 1 | Fork-Clutch |
| 8 | 115-2311 | 1 | Lever-Clutch |
| 9 | 87-1920 | 2 | Seal-Oil |
| 10 | 87-3770 | 2 | Bushing-Housing, Bell |
| 11 | 87-1910 | 4 | Pin-Dowel |
| 12 | 33104-040 | 9 | Screw-HHF |
| 13 | 87-6410 | 2 | Bracket-Harness |
| 14 | 107-7983 | 6 | Screw-HH |
| 15 | 32121-7 | 1 | Pin-Roll, Slotted |
| 16 | 32121-24 | 2 | Pin-Spring |
| 17 | 2411-33 | 1 | Balljoint-RH (W/Grommet) |
| 18 | 3296-4 | 1 | Nut-Lock |
| 20 | 120-5018 | 1 | Clip-Open J, Coated |

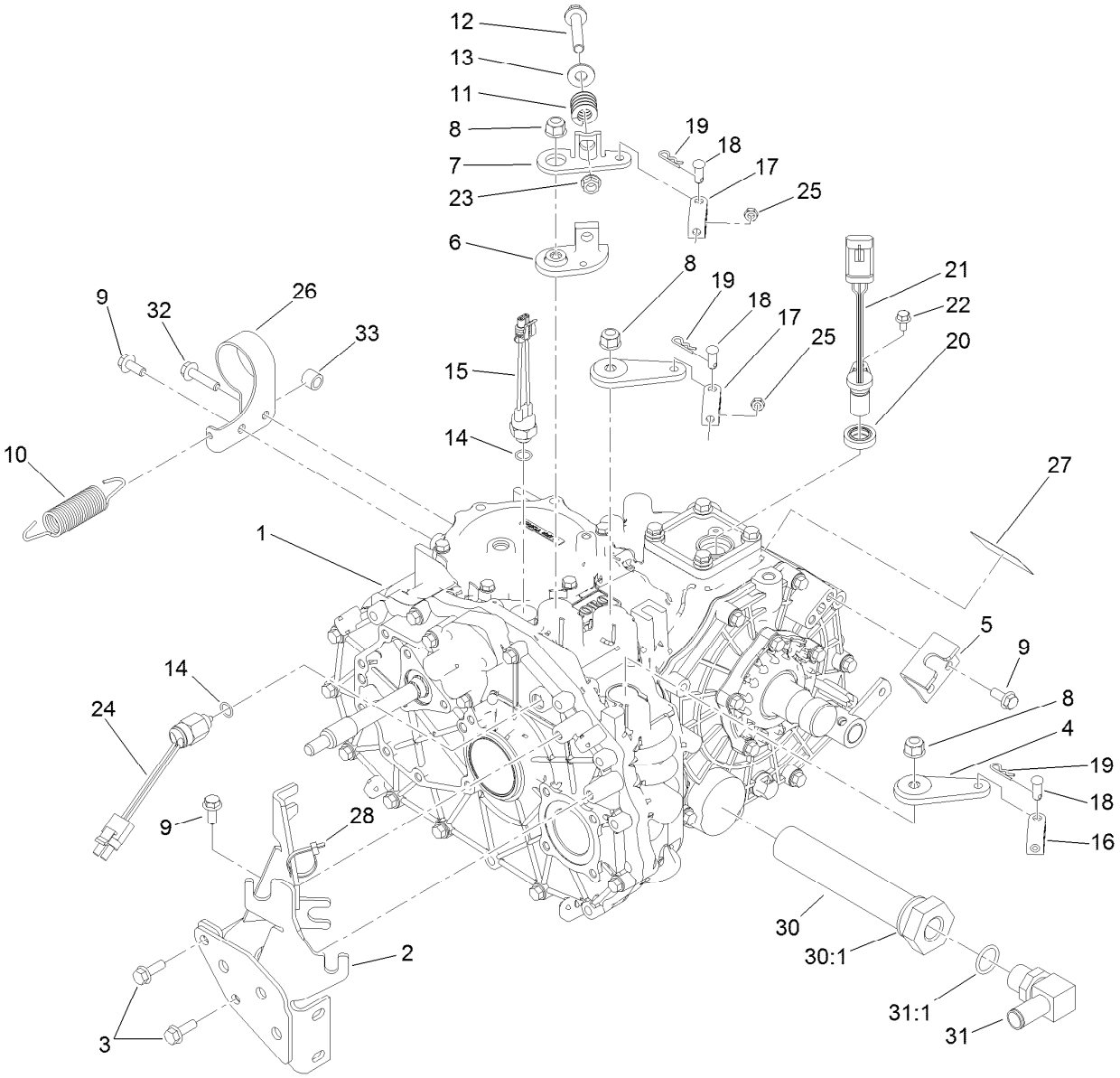


# Transaxle Assembly

| Ref. | Part Number | Qty. | Description |
|---|---|---|---|
| 1 | 115-7783 | 1 | 2 Wheel Drive Transaxle ASM |
| 2 | 105-4207-03 | 1 | Mount-Cable |
| 3 | 33104-025 | 2 | Screw-HHF |
| 4 | 132-6764 | 2 | Lever-Shift |
| 5 | 87-4470 | 1 | Bracket-Lock, Differential |
| 6 | 87-7970 | 1 | Arm-Shift |
| 7 | 87-8250 | 1 | Plate-Arm, Shift |
| 8 | 103-9511 | 3 | Nut-Lock, NI |
| 9 | 98-7977 | 4 | Screw-HHF |
| 10 | 68-9950 | 1 | Spring-Traction |
| 11 | 87-6910 | 1 | Spring-Compression |
| 12 | 66-9302 | 1 | Screw-HHF, Whiz |
| 13 | 3256-4 | 1 | Washer-Flat |
| 14 | 237-30 | 2 | O-Ring |
| 15 | 72-4310 | 1 | Switch-Ball |
| 16 | 87-7160 | 1 | Clevis-Cable |
| 17 | 87-2310 | 2 | Clevis-Cable |

| Ref. | Part Number | Qty. | Description |
|---|---|---|---|
| 18 | 283-62 | 3 | Pin-Clevis |
| 19 | 3290-307 | 3 | Pin-Cotter |
| 20 | 92-3735 | 1 | Seal-Sensor, Oil |
| 21 | 120-4800 | 1 | Sensor-Geartooth |
| 22 | 33103-012 | 1 | Screw-HHF |
| 23 | 3290-357 | 1 | Nut-HHF, Whiz |
| 24 | 87-6710 | 1 | Switch-Transmission |
| 25 | 3220-1 | 2 | Nut-Jam |
| 26 | 131-6695 | 1 | Bracket-Pump, Fuel |
| 27 | 115-7741 | 1 | Decal-Oil, Transmission |
| 28 | 3290-379 | 1 | Tie-Cable |
| 30 | 87-3990 | 1 | Strainer-Transaxle |
| 30:1 | 237-123 | 1 | O-Ring |
| 31 | 353-987 | 1 | Fitting-Elbow, 90 |
| 31:1 | 237-81 | 1 | O-Ring |
| 32 | 132-0797 | 1 | Screw-HHF |
| 33 | 93-9847 | 1 | Spacer |

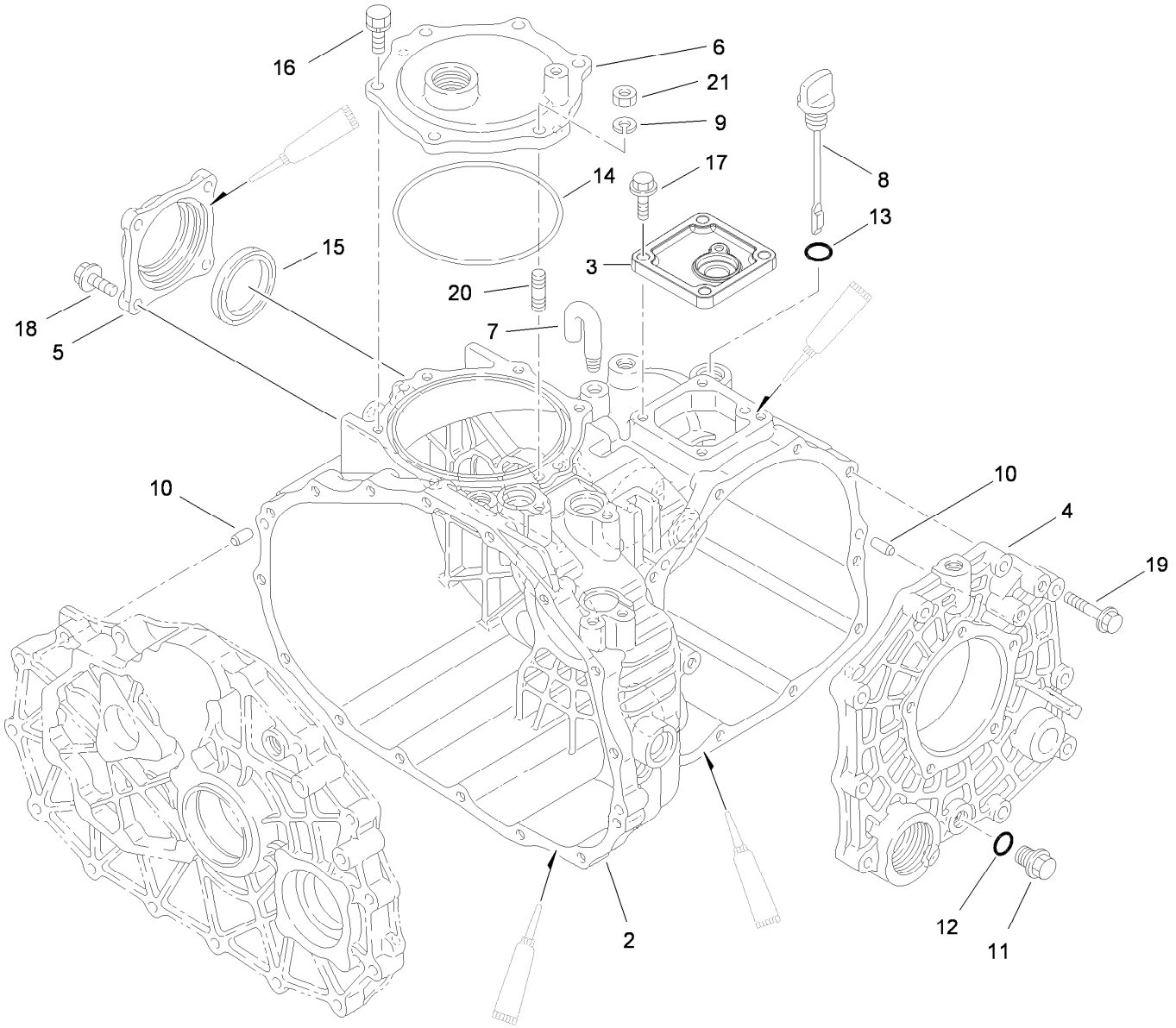


# Case Assembly
# Transaxle Assembly No. 115-7783

| Ref. | Part Number | Qty. | Description |
|---|---|---|---|
| 2 | 92-0651 | 1 | Case-Transmission |
| 3 | 92-0810 | 1 | Cover-Upper, Sensor |
| 4 | 92-0653 | 1 | Cover-Side |
| 5 | 92-0655 | 1 | Cover-Seal, Axle |
| 6 | 92-0656 | 1 | Cover-Upper, PTO |
| 7 | 92-0743 | 1 | Breather-Air |
| 8 | 92-0662 | 1 | Cap-Oil |
| 9 | 92-0762 | 1 | Washer-Spring |
| 10 | 92-0765 | 4 | Pin-Parallel |
| 11 | 92-0773 | 1 | Plug-Drain |

| Ref. | Part Number | Qty. | Description |
|---|---|---|---|
| 12 | 92-0787 | 1 | O-Ring |
| 13 | 92-0788 | 1 | O-Ring |
| 14 | 92-0790 | 1 | O-Ring |
| 15 | 92-0793 | 1 | Seal-Oil |
| 16 | 92-0796 | 5 | Bolt |
| 17 | 33104-025 | 4 | Screw-HHF |
| 18 | 33104-025 | 4 | Screw-HHF |
| 19 | 33104-040 | 10 | Screw-HHF |
| 20 | 92-0805 | 1 | Bolt 8X20 |
| 21 | 68-9400 | 1 | Nut-Flange [f/W Engine] |

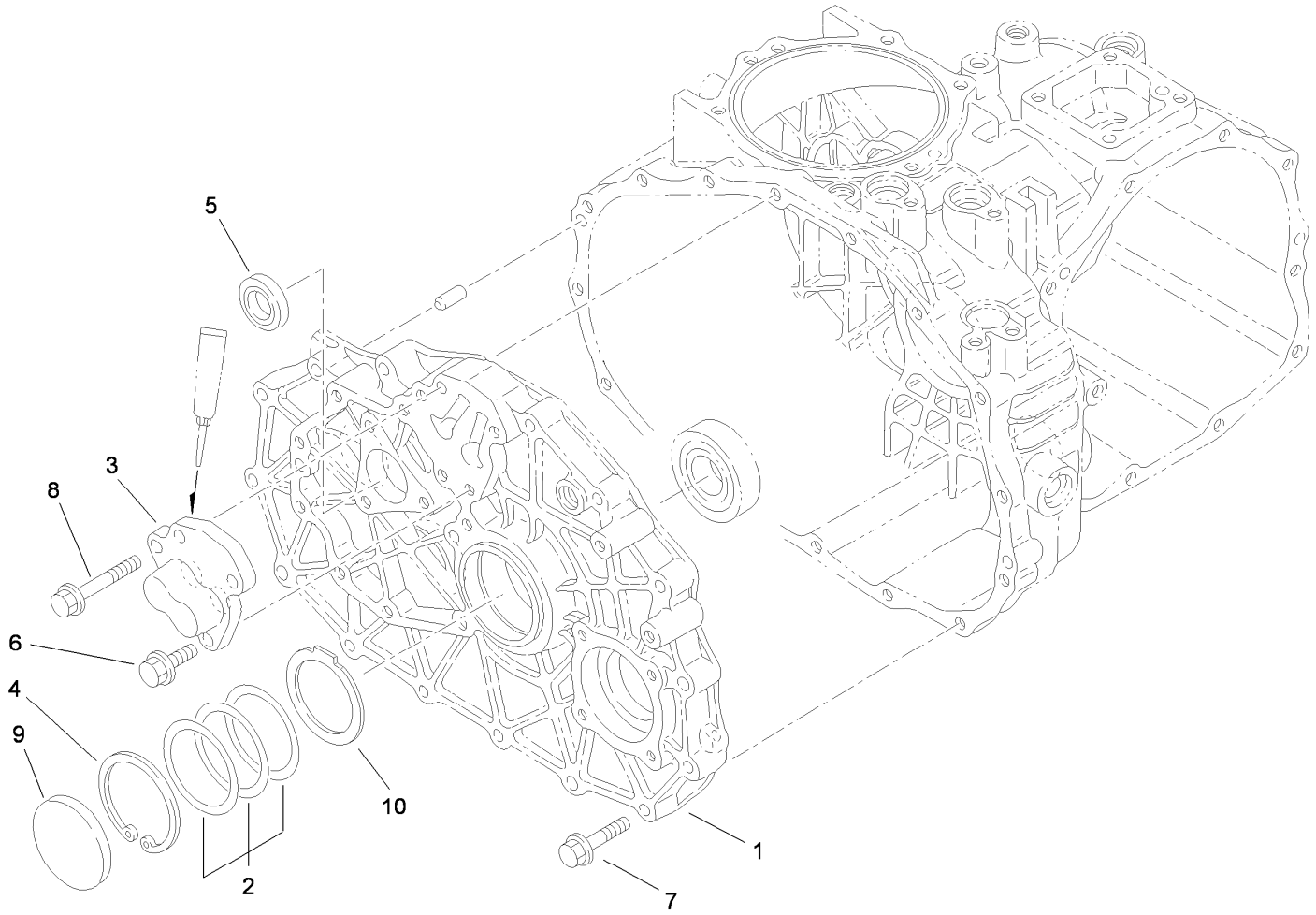


# Center Plate Assembly
# Transaxle Assembly No. 115-7783

| *Ref.* | *Part Number* | *Qty.* | *Description* |
|---|---|---|---|
| 1 | 100-4461 | 1 | Plate-Center |
| 2 | 100-4460 | 1 | Shim-Set |
| 3 | 92-0706 | 1 | Shaft-Fork |
| 4 | 92-0759 | 1 | Ring-Snap |
| 5 | 92-0791 | 1 | Seal-Oil |
| 6 | 33104-025 | 3 | Screw-HHF |
| 7 | 33104-040 | 15 | Screw-HHF |
| 8 | 33104-050 | 1 | Screw-HHF |
| 9 | 92-0807 | 1 | Cap-Sealing |
| 10 | 100-4465 | 1 | Shim (W/Tab) |

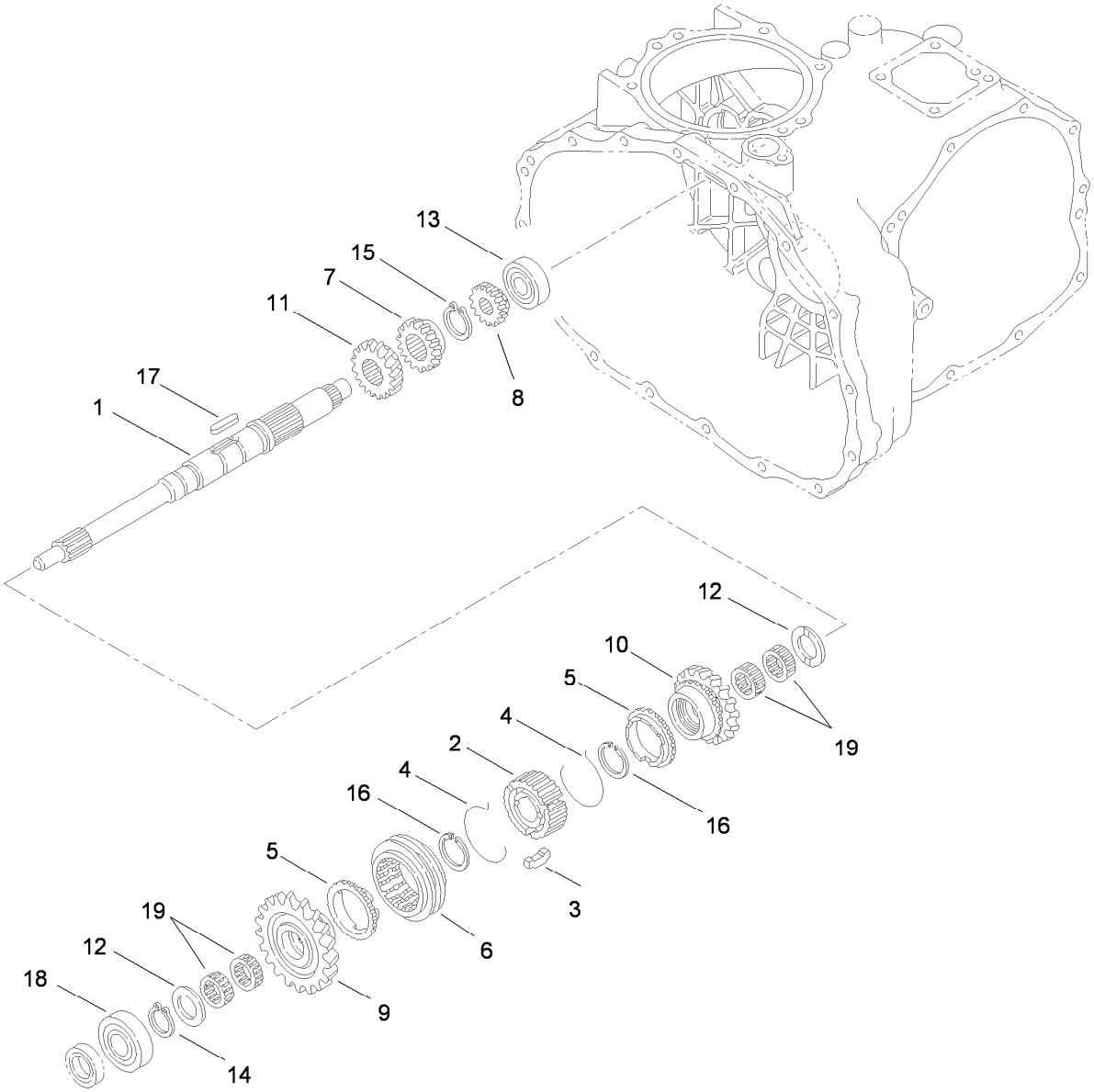


# Main Shaft Assembly
# Transaxle Assembly No. 115-7783

| Ref. | Part Number | Qty. | Description |
|---|---|---|---|
| 1 | 92-0663 | 1 | Shaft-Main |
| 2 | 92-0664 | 1 | Hub-Synchro |
| 3 | 92-0665 | 3 | Key-Synchro |
| 4 | 92-0666 | 2 | Spring-Synchro |
| 5 | 92-0667 | 2 | Ring-Synchro |
| 6 | 92-0668 | 1 | Shifter-Synchro |
| 7 | 92-0672 | 1 | Gear-Main, 18 Tooth |
| 8 | 92-0673 | 1 | Gear-Main, 14 Tooth |
| 9 | 110-2521 | 1 | Gear-Main, 27 Tooth |
| 10 | 110-2522 | 1 | Gear- Main, 24 Tooth |

| Ref. | Part Number | Qty. | Description |
|---|---|---|---|
| 11 | 92-0687 | 1 | Gear-Main, 16 Tooth |
| 12 | 92-0740 | 2 | Washer-Thrust |
| 13 | 92-0650 | 1 | Bearing |
| 14 | 92-0753 | 1 | Ring-Snap |
| 15 | 92-0754 | 1 | Ring-Snap |
| 16 | 92-0763 | 2 | Ring-Snap |
| 17 | 92-0772 | 1 | Key |
| 18 | 251-8 | 1 | Bearing-Ball |
| 19 | 92-0781 | 4 | Bearing-Needle |

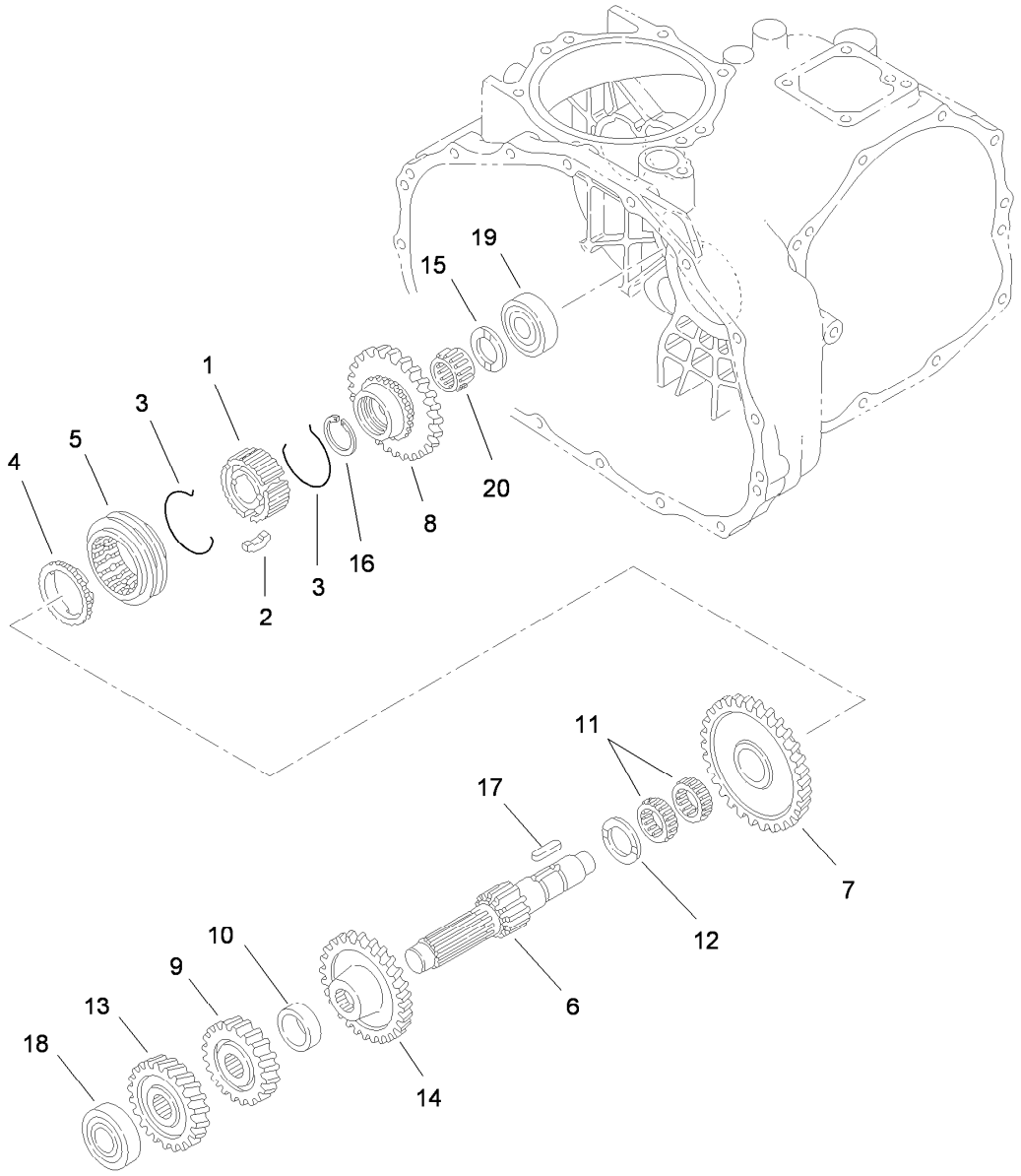


# Reduction Shaft Assembly
# Transaxle Assembly No. 115-7783

| Ref. | Part Number | Qty. | Description |
|---|---|---|---|
| 1 | 92-0664 | 1 | Hub-Synchro |
| 2 | 92-0665 | 3 | Key-Synchro |
| 3 | 92-0666 | 2 | Spring-Synchro |
| 4 | 92-0667 | 1 | Ring-Synchro |
| 5 | 92-0668 | 1 | Shifter-Synchro |
| 6 | 92-0674 | 1 | Shaft-Reduction |
| 7 | 110-2524 | 1 | Gear- Reduction, 49 Tooth |
| 8 | 92-0819 | 1 | Gear-Reduction, 40 Tooth |
| 9 | 92-0769 | 1 | Pin-Roll |
| 10 | 92-0680 | 1 | Collar |

| Ref. | Part Number | Qty. | Description |
|---|---|---|---|
| 11 | 92-0681 | 2 | Bearing-Needle |
| 12 | 92-0682 | 1 | Washer-Thrust |
| 13 | 92-0822 | 1 | Gear-Reduction, 28 Tooth |
| 14 | 92-0823 | 1 | Gear-Reduction, 43 Tooth |
| 15 | 92-0740 | 1 | Washer-Thrust |
| 16 | 92-0673 | 1 | Gear-Main, 14 Tooth |
| 17 | 92-0772 | 1 | Key |
| 18 | 105-7985 | 1 | Bearing |
| 19 | 92-0778 | 1 | Bearing |
| 20 | 92-0782 | 1 | Bearing-Needle |

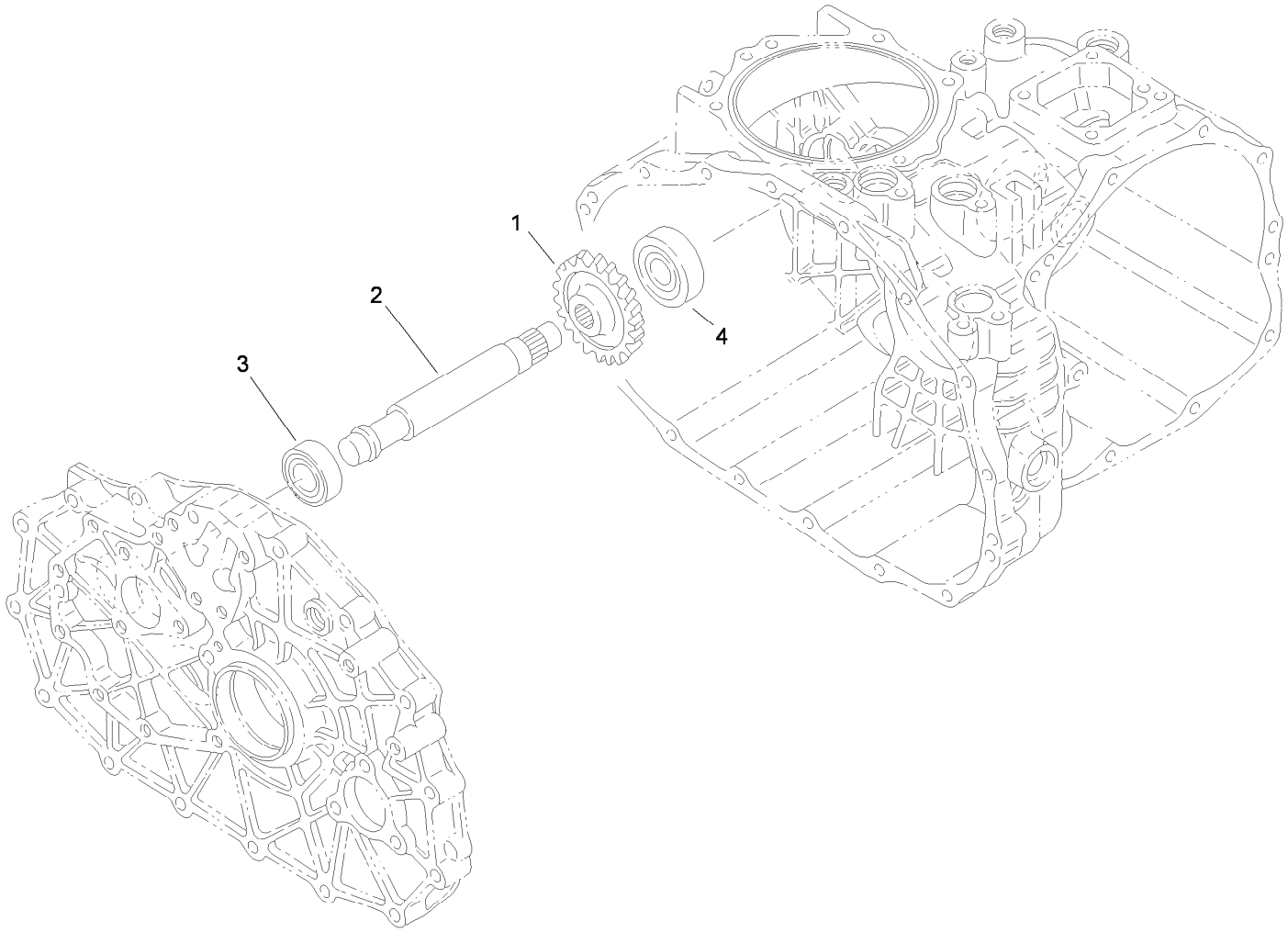


# Reverse Shaft Assembly
# Transaxle Assembly No. 115-7783

| *Ref.* | *Part Number* | *Qty.* | *Description* |
|---|---|---|---|
| 1 | 92-0684 | 1 | Gear-Reverse, 33 Tooth |
| 2 | 92-0824 | 1 | Shaft-Idler, Reverse |
| 3 | 251-346 | 1 | Bearing-Ball |
| 4 | 92-0778 | 1 | Bearing |

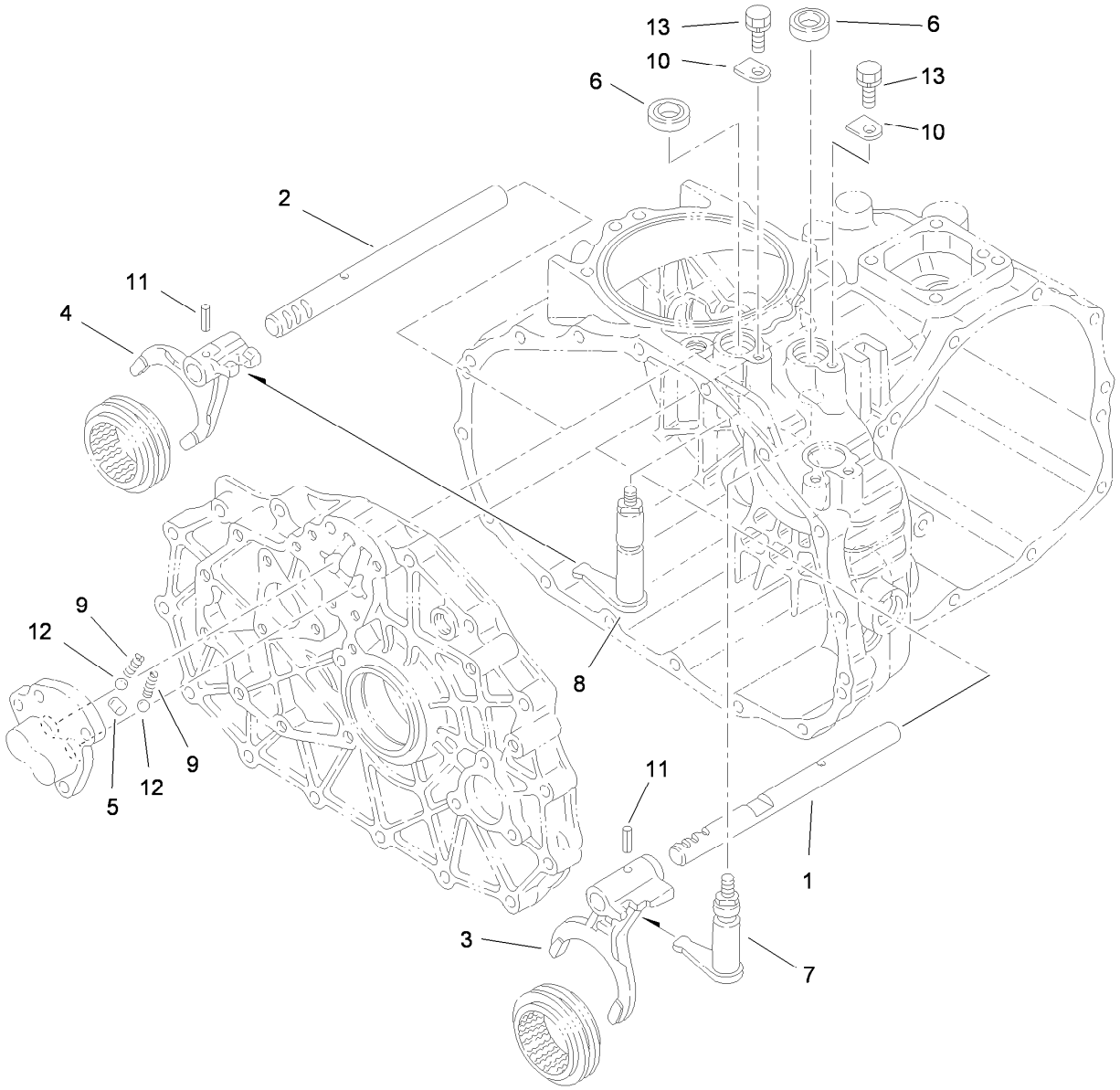


# Main Shift Assembly
# Transaxle Assembly No. 115-7783

| *Ref.* | *Part Number* | *Qty.* | *Description* |
|---|---|---|---|
| 1 | 92-0698 | 1 | Shaft-Fork |
| 2 | 92-0699 | 1 | Shaft-Fork |
| 3 | 92-0700 | 1 | Fork-Shift |
| 4 | 92-0701 | 1 | Fork-Shift |
| 5 | 92-0705 | 1 | Lock-Spindle |
| 6 | 92-0729 | 2 | Seal-Oil |
| 7 | 92-0816 | 1 | Arm-Shift |
| 8 | 92-0817 | 1 | Arm-Shift |
| 9 | 92-0731 | 2 | Spring |
| 10 | 92-0732 | 2 | Plate-Keeper |
| 11 | 92-0769 | 2 | Pin-Roll |
| 12 | 92-0785 | 2 | Ball-Steel |
| 13 | 33104-016 | 2 | Screw-HHF |

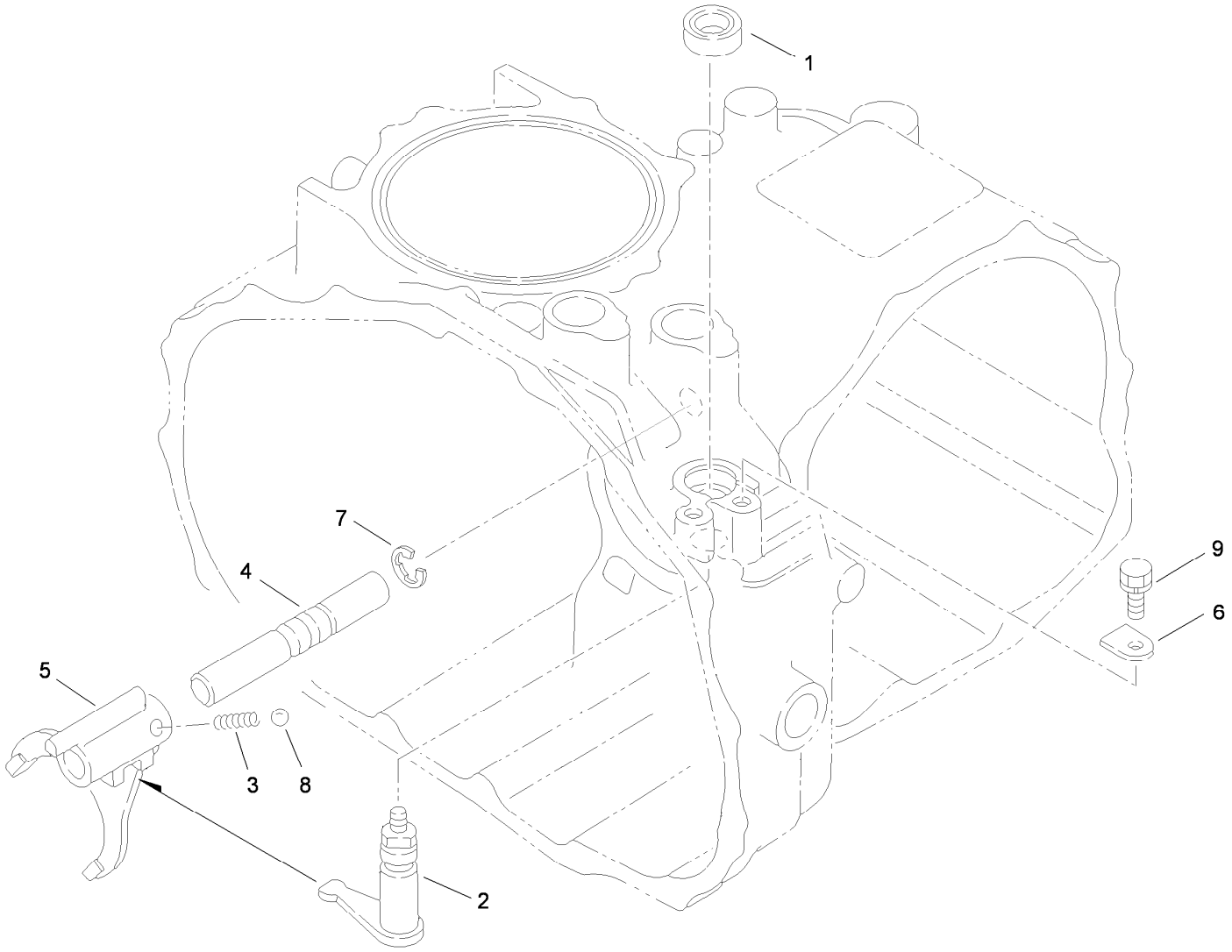


# Hi-Lo Shift Assembly
# Transaxle Assembly No. 115-7783

| *Ref.* | *Part Number* | *Qty.* | *Description* |
|---|---|---|---|
| 1 | 92-0729 | 1 | Seal-Oil |
| 2 | 92-0818 | 1 | Arm-Shift |
| 3 | 92-0731 | 1 | Spring |
| 4 | 92-0708 | 1 | Shaft-Fork |
| 5 | 92-0709 | 1 | Fork-Shift |
| 6 | 92-0732 | 1 | Plate-Keeper |
| 7 | 92-0761 | 1 | Ring-E |
| 8 | 92-0785 | 1 | Ball-Steel |
| 9 | 33104-016 | 1 | Screw-HHF |

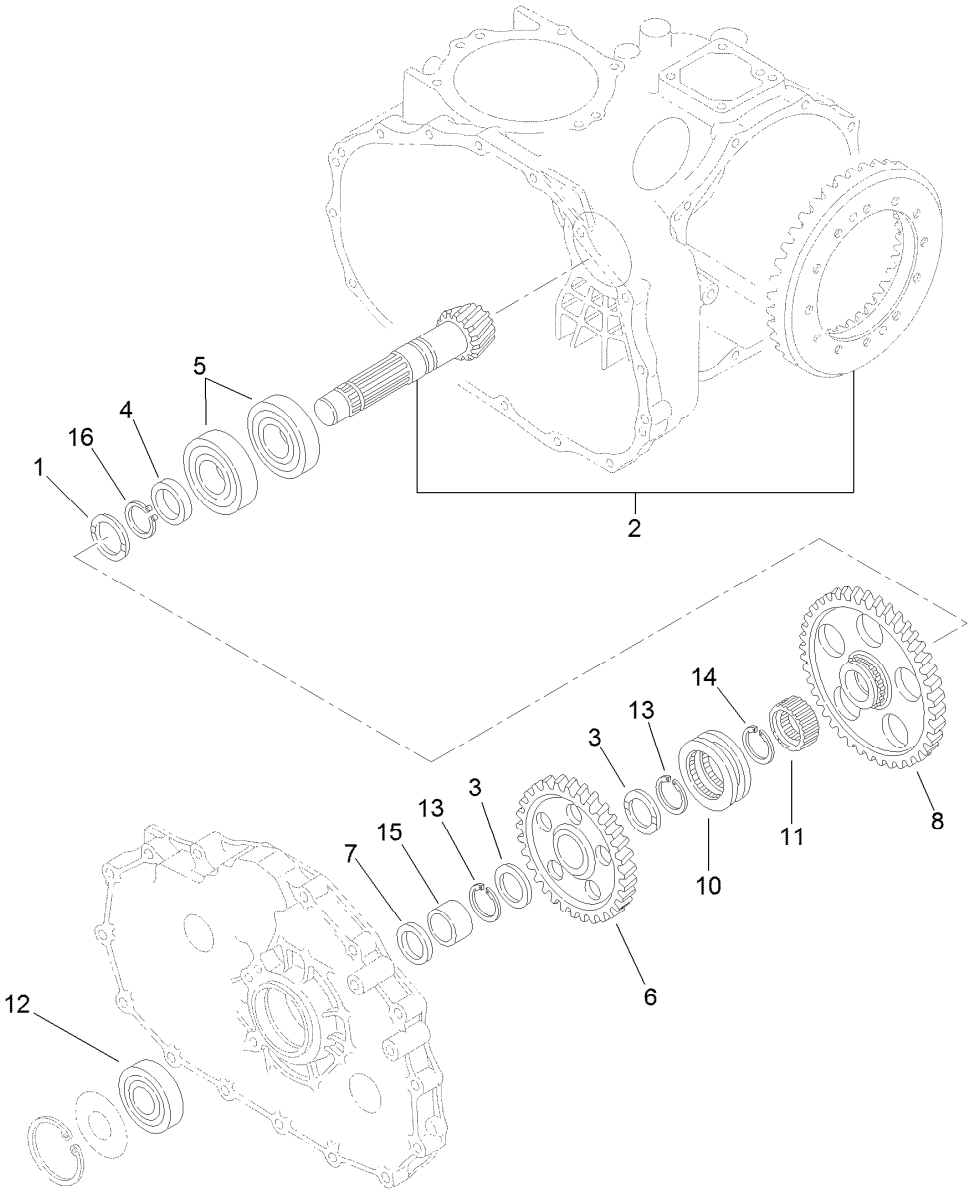


# Countershaft Assembly
# Transaxle Assembly No. 115-7783

| *Ref.* | *Part Number* | *Qty.* | *Description* |
|---|---|---|---|
| 1 | 92-0741 | 1 | Washer-Thrust |
| 2 | 105-7983 | 1 | Countershaft And Ring Gear ASM |
| 3 | 92-0711 | 2 | Washer-Thrust |
| 4 | 92-0713 | 1 | Collar |
| 5 | 92-0714 | 2 | Bearing |
| 6 | 92-0715 | 1 | Gear-Countershaft |
| 7 | 92-0716 | 1 | Collar |
| 8 | 92-0717 | 1 | Gear-Countershaft |
| 10 | 92-0718 | 1 | Shifter |
| 11 | 105-7986 | 1 | Collar-Spline |
| 12 | 92-0712 | 1 | Bearing-Ball |
| 13 | 105-7987 | 2 | Ring-Snap |
| 14 | 92-0755 | 1 | Ring-Snap |
| 15 | 92-0783 | 1 | Race-Inner |
| 16 | 92-0759 | 1 | Ring-Snap |

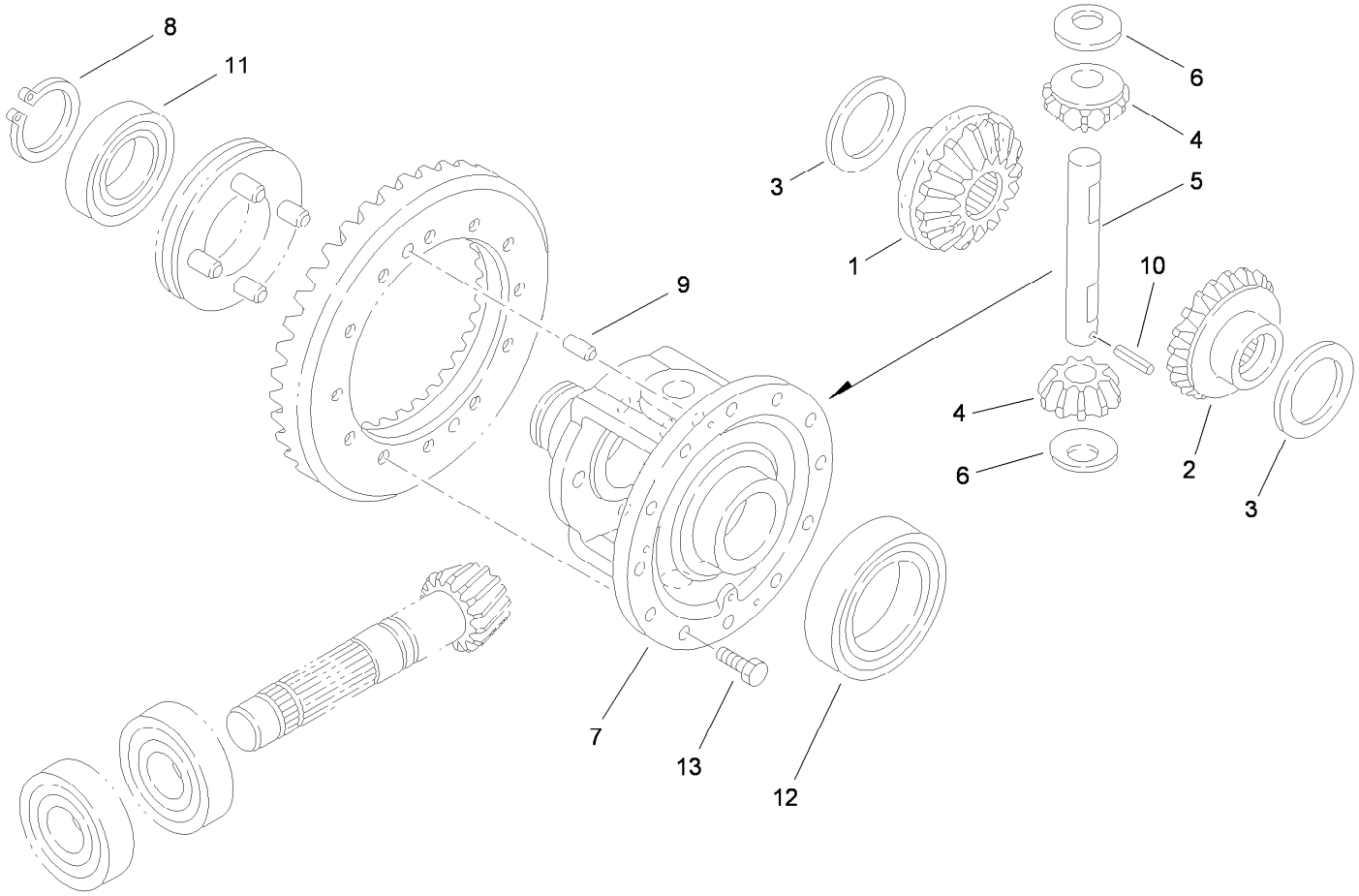


# Differential Gear Assembly
# Transaxle Assembly No. 115-7783

| *Ref.* | *Part Number* | *Qty.* | *Description* |
|---|---|---|---|
| 1 | 92-0745 | 1 | Gear-Side, LH |
| 2 | 92-0746 | 1 | Gear-Side, RH |
| 3 | 92-0747 | 2 | Side-Gear, Left Inner |
| 4 | 92-0748 | 2 | Pinion-Differential |
| 5 | 92-0749 | 1 | Shaft-Pinion |
| 6 | 92-0750 | 2 | Washer |
| 7 | 92-0720 | 1 | Case-Differential |
| 8 | 92-0756 | 1 | Ring-Snap |
| 9 | 92-0765 | 2 | Pin-Parallel |
| 10 | 92-0768 | 1 | Pin-Roll, Spring |
| 11 | 92-0775 | 1 | Bearing |
| 12 | 92-0776 | 1 | Bearing |
| 13 | 92-0803 | 12 | Bolt |

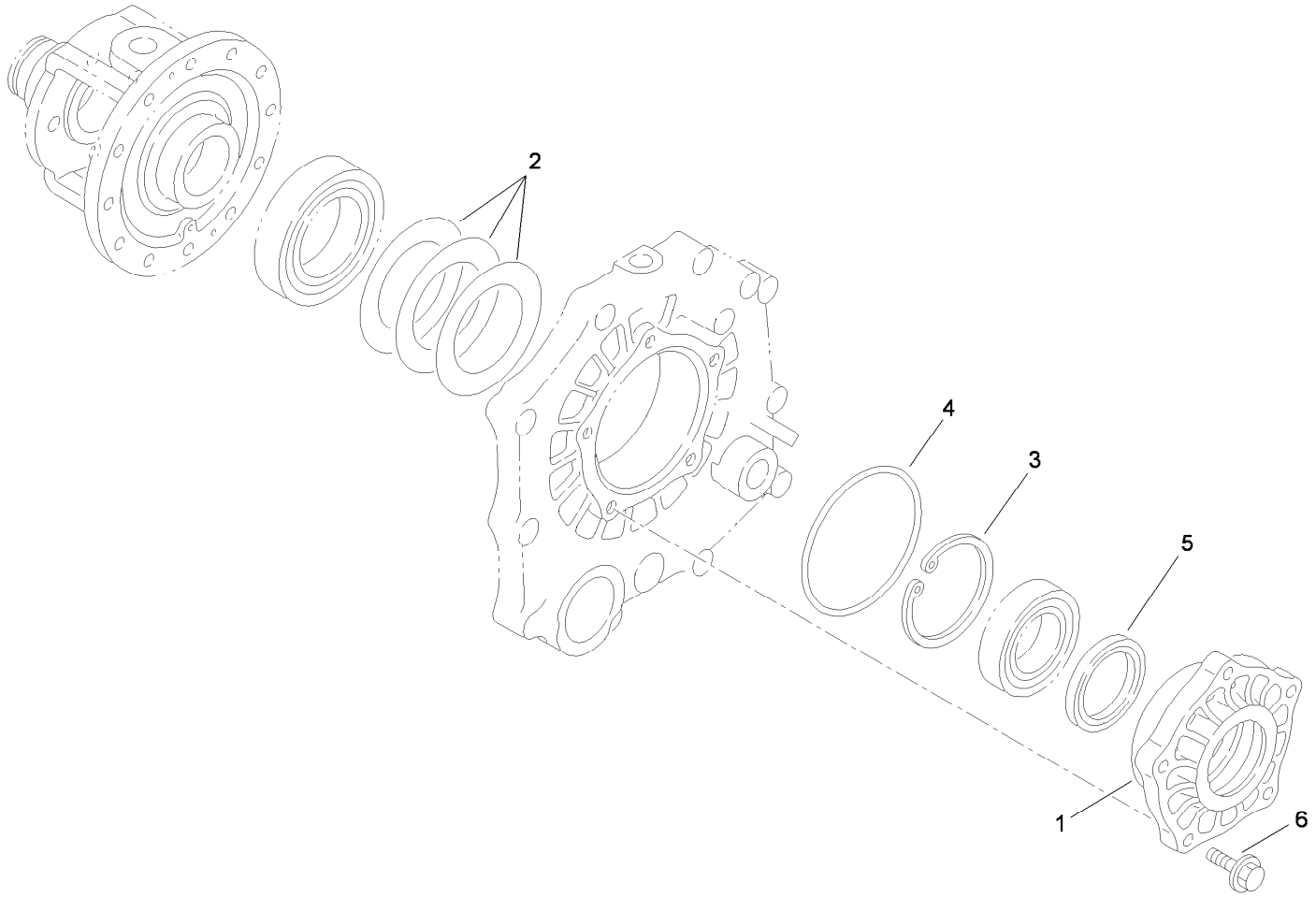


# Differential Carrier Assembly
# Transaxle Assembly No. 115-7783

| *Ref.* | *Part Number* | *Qty.* | *Description* |
|---|---|---|---|
| 1 | 92-0654 | 1 | Carrier-Differential |
| 2 | 92-0809 | 1 | Set-Shim |
| 3 | 92-0760 | 1 | Ring-Snap |
| 4 | 92-0789 | 1 | O-Ring |
| 5 | 92-0793 | 1 | Seal-Oil |
| 6 | 33104-030 | 5 | Screw-HHF |

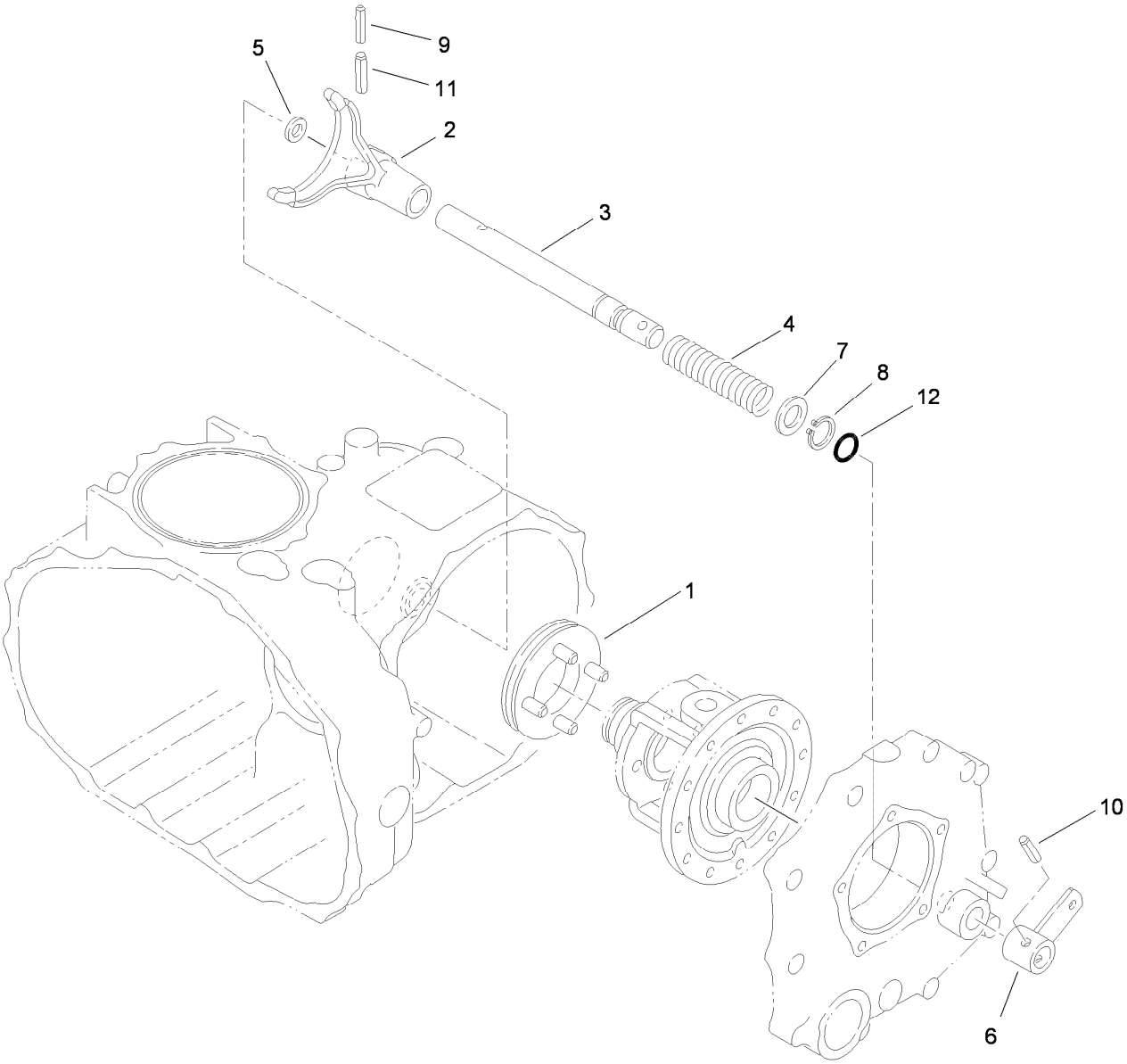


# Differential Lock Assembly
# Transaxle Assembly No. 115-7783

| *Ref.* | *Part Number* | *Qty.* | *Description* |
|---|---|---|---|
| 1 | 92-0730 | 1 | Slider-Differential, Lock |
| 2 | 92-0721 | 1 | Fork-Lock, Differential |
| 3 | 92-0722 | 1 | Shaft-Fork, Lock Differential |
| 4 | 92-0723 | 1 | Spring-Lock, Differential |
| 5 | 92-0744 | 1 | Washer |
| 6 | 92-0724 | 1 | Arm-Lock, Differential |
| 7 | 92-0733 | 1 | Washer |
| 8 | 92-0753 | 1 | Ring-Snap |
| 9 | 92-0768 | 1 | Pin-Roll, Spring |
| 10 | 92-0770 | 1 | Pin-Roll, Spring |
| 11 | 92-0771 | 1 | Pin-Roll, Spring |
| 12 | 92-0787 | 1 | O-Ring |

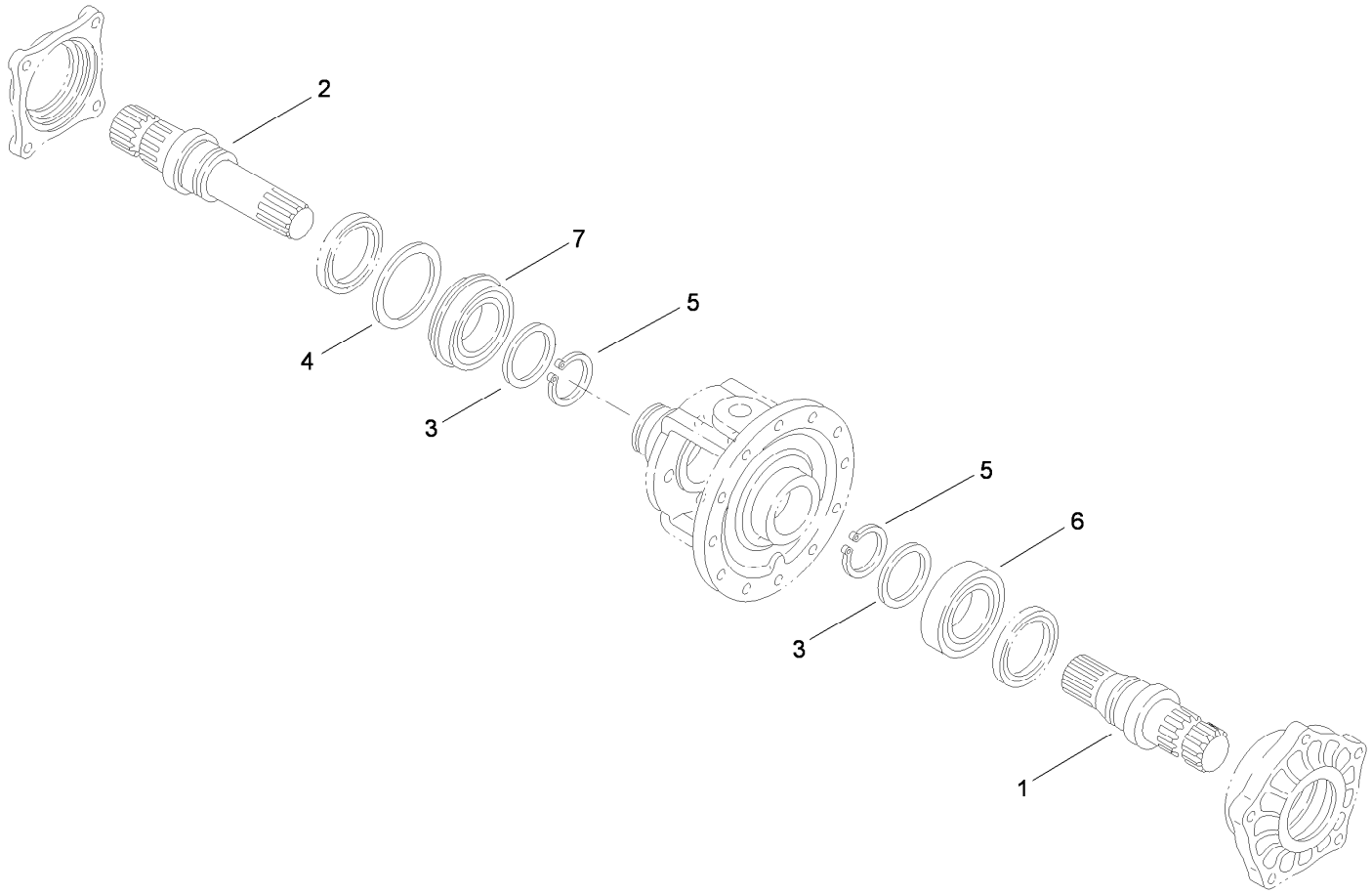


# Axle Shaft Assembly
# Transaxle Assembly No. 115-7783

| *Ref.* | *Part Number* | *Qty.* | *Description* |
|---|---|---|---|
| 1 | 92-0725 | 1 | Shaft-Axle, Left |
| 2 | 92-0726 | 1 | Shaft-Axle, Right |
| 3 | 92-0727 | 2 | Washer |
| 4 | 92-0728 | 1 | Washer |
| 5 | 92-0756 | 2 | Ring-Snap |
| 6 | 92-0775 | 1 | Bearing |
| 7 | 92-0780 | 1 | Bearing |

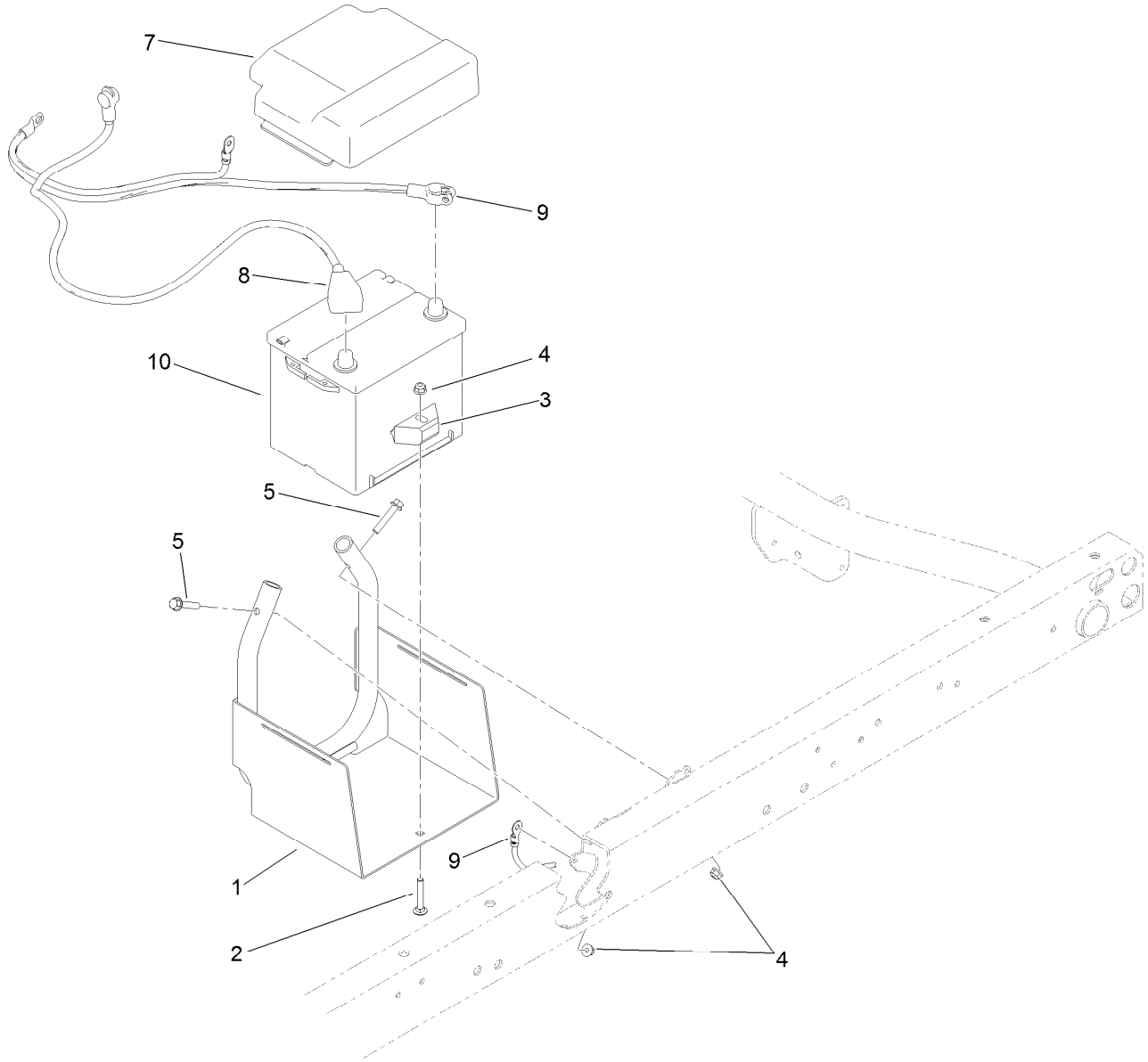


# Battery Assembly

| Ref. | Part Number | Qty. | Description |
|---|---|---|---|
| 1 | 115-2237-03 | 1 | Tray-Battery |
| 2 | 3230-6 | 1 | Bolt-CARR |
| 3 | 66-2490 | 1 | Retainer-Battery |
| 4 | 104-8300 | 3 | Nut-HF, NI |
| 5 | 94-5780 | 2 | Screw-HWH |
| 7 | 119-9496 | 1 | Cover-Battery |
| 8 | 122-0204 | 1 | Cable-Battery, Positive |
| 9 | 122-0120 | 1 | Cable-Battery, Negative |
| 10 | 106-5187 | 1 | Battery-Dry |

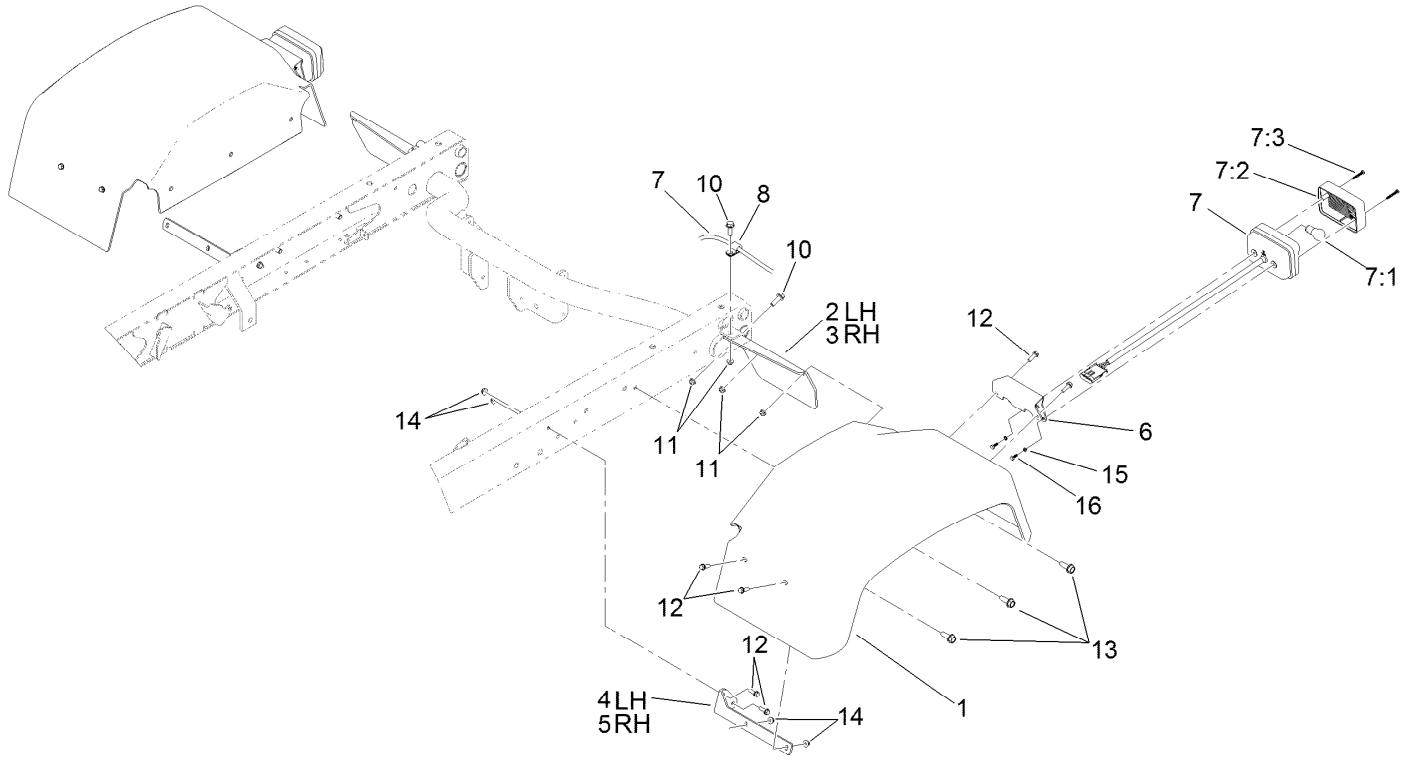


# Tail Light and Fender Assembly

| Ref. | Part Number | Qty. | Description |
|---|---|---|---|
| 1 | 132-6701 | 2 | Fender-Rear |
| 2 | 93-8943-03 | 1 | Bracket-Fender, Rear (LH) |
| 3 | 93-8944-03 | 1 | Bracket-Fender, Rear (RH) |
| 4 | 93-8941-03 | 1 | Bracket-Fender, Front (LH) |
| 5 | 93-8942-03 | 1 | Bracket-Fender, Front (RH) |
| 6 | 121-6269-03 | 2 | Bracket-Light, Tail |
| 7 | 120-4820 | 2 | Light-Tail, Brake |
| 7:1 | 115-7858 | 1 | Bulb-7528 |
| 7:2 | 121-6271 | 1 | Lens-Light, Tail |

| Ref. | Part Number | Qty. | Description |
|---|---|---|---|
| 7:3 | 121-6272 | 2 | Screw-PPH |
| 8 | 2412-93 | 2 | Clamp-R |
| 10 | 3234-17 | 4 | Screw-HHF |
| 11 | 104-8300 | 4 | Nut-HF, NI |
| 12 | 32105-15 | 12 | Screw-HWH |
| 13 | 105-6245 | 6 | Screw-Tapping |
| 14 | 104-7201 | 12 | Nut-HF |
| 15 | 43-5920 | 4 | Washer-Lock, Spring |
| 16 | 121-6320 | 4 | Screw-HH |

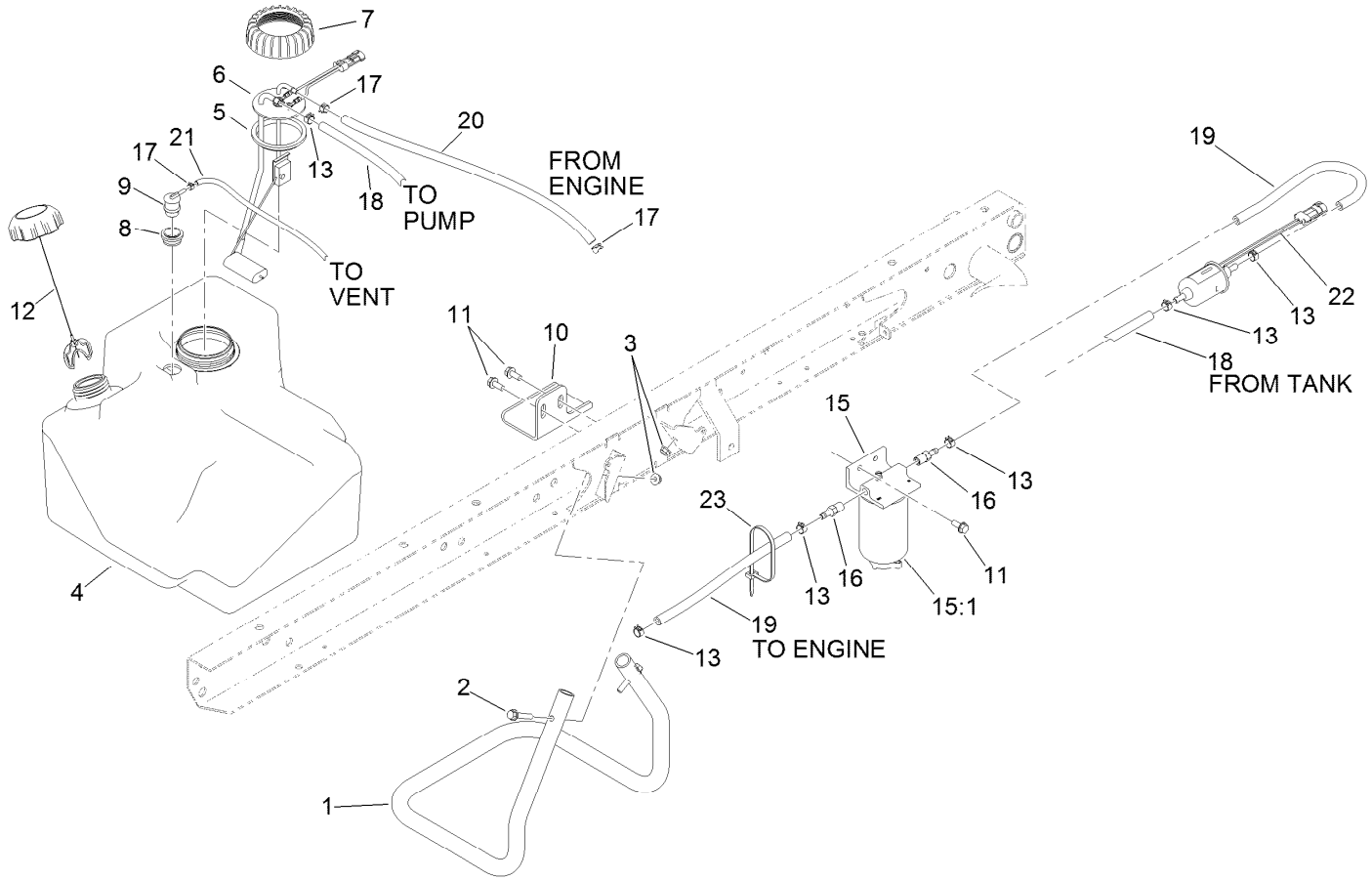


# Fuel System Assembly

| Ref. | Part Number | Qty. | Description |
|---|---|---|---|
| 1 | 115-7767-03 | 1 | Tube-Support |
| 2 | 94-5780 | 2 | Screw-HWH |
| 3 | 104-8300 | 2 | Nut-HF, NI |
| 4 | 119-0735 | 1 | Tank-Fuel |
| 5 | 115-2163 | 1 | Gasket-Pump, Fuel |
| 6 | 114-8348 | 1 | Sender-Fuel |
| 7 | 115-2162 | 1 | Cap-Pump, Fuel |
| 8 | 114-0284 | 1 | Grommet |
| 9 | 114-0285 | 1 | Valve-Rollover |
| 10 | 114-8404 | 1 | Plate-Retainer |
| 11 | 32144-11 | 4 | Screw-HWH |
| 12 | 115-7789 | 1 | Cap-Fuel, Diesel |

| Ref. | Part Number | Qty. | Description |
|---|---|---|---|
| 13 | 92-2379 | 6 | Clamp-Hose |
| 15 | 110-9044 | 1 | Separator-Filter |
| 15:1 | 110-9049 | 1 | Filter-Spin On |
| 16 | 353-783 | 2 | Fitting-STR |
| 17 | 2412-146 | 3 | Clamp-Hose |
| 18 | 114-8206 | 1 | Hose-Fuel |
| 19 | 110-4101 | 2 | Hose-Fuel |
| 20 | 120-5022 | 1 | Hose-Fuel |
| 21 | 110-8255 | 1 | Hose-Fuel |
| 22 | 110-8806 | 1 | Pump-Fuel |
| 23 | 3290-379 | 1 | Tie-Cable |

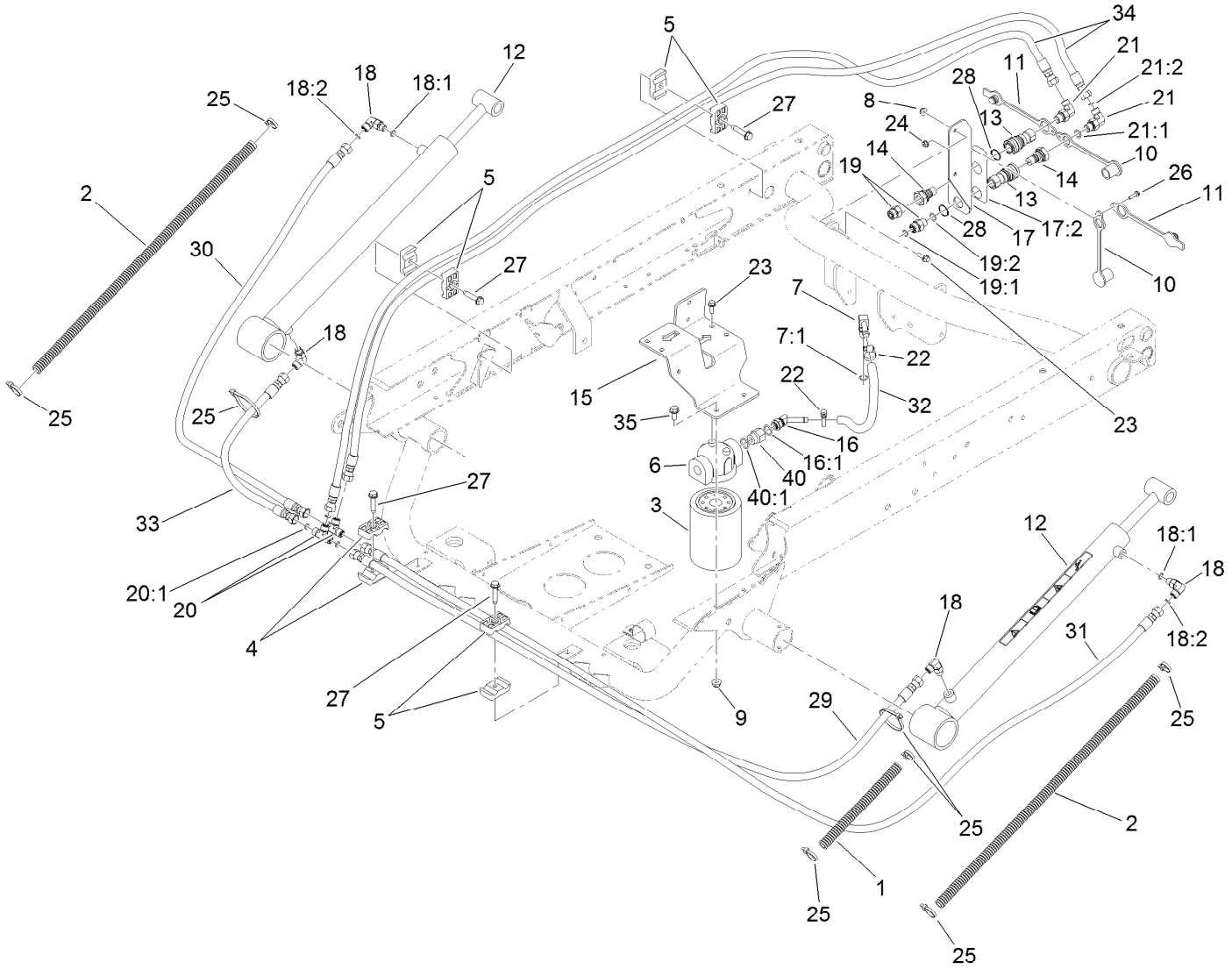


# Hydraulic Lift Cylinder Assembly

| Ref. | Part Number | Qty. | Description |
|---|---|---|---|
| 1 | 24-7922 | 1 | Conduit-Convoluted, Split |
| 2 | 24-7923 | 2 | Conduit-Convoluted, Split |
| 3 | 54-0110 | 1 | Filter-Oil, Transmission |
| 4 | 56-7971 | 2 | Clamp-Tube |
| 5 | 56-7976 | 6 | Clamp-Tube |
| 6 | 87-8780 | 1 | Head-Filter |
| 7 | 100-4887 | 1 | Fitting-Elbow, 90 |
| 7:1 | 237-42 | 1 | O-Ring |
| 8 | 104-7201 | 2 | Nut-HF |
| 9 | 104-8300 | 2 | Nut-HF, NI |
| 10 | 106-7881 | 2 | Cap-Dust, HYD |
| 11 | 106-7882 | 2 | Plug-Dust, HYD |
| 12 | 106-7939 | 2 | HYD Cylinder ASM |
| 13 | 106-7968 | 2 | Coupler-Quick, Female |
| 14 | 106-7969 | 2 | Coupler-Quick, Male |
| 15 | 115-2168-03 | 1 | Bracket-Filter |
| 16 | 103-1807 | 1 | Fitting-Barbed, 45 DEG |
| 16:1 | 237-42 | 1 | O-Ring |
| 17 | 115-7715 | 1 | Coupler Bracket ASM |
| 17:2 | 115-7723 | 1 | Decal-Disconnect, Quick |
| 18 | 340-132 | 4 | Fitting-Elbow, 90 DEG |

| Ref. | Part Number | Qty. | Description |
|---|---|---|---|
| 18:1 | 237-78 | 1 | O-Ring |
| 18:2 | 237-21 | 1 | O-Ring |
| 19 | 340-2 | 2 | Fitting-Straight |
| 19:1 | 237-22 | 1 | O-Ring |
| 19:2 | 237-42 | 1 | O-Ring |
| 20 | 340-21 | 2 | Fitting |
| 20:1 | 237-21 | 3 | O-Ring |
| 21 | 340-82 | 2 | Fitting-Elbow, 90 DEG |
| 21:1 | 237-42 | 1 | O-Ring |
| 21:2 | 237-21 | 1 | O-Ring |
| 22 | 2412-36 | 2 | Clamp-Hose |
| 23 | 3234-4 | 4 | Screw-HHF |
| 24 | 3290-148 | 1 | Nut-HF |
| 25 | 3290-379 | 6 | Tie-Cable |
| 26 | 32105-13 | 1 | Screw-HWH |
| 27 | 32144-57 | 4 | Screw |
| 28 | 32151-83 | 2 | Ring-Snap |
| 29 | 115-7711 | 1 | Hose-HYD |
| 30 | 108-6508 | 1 | Hose-HYD |
| 31 | 104-3716 | 1 | Hose-HYD |
| 32 | 115-2228 | 1 | Hose-HYD |

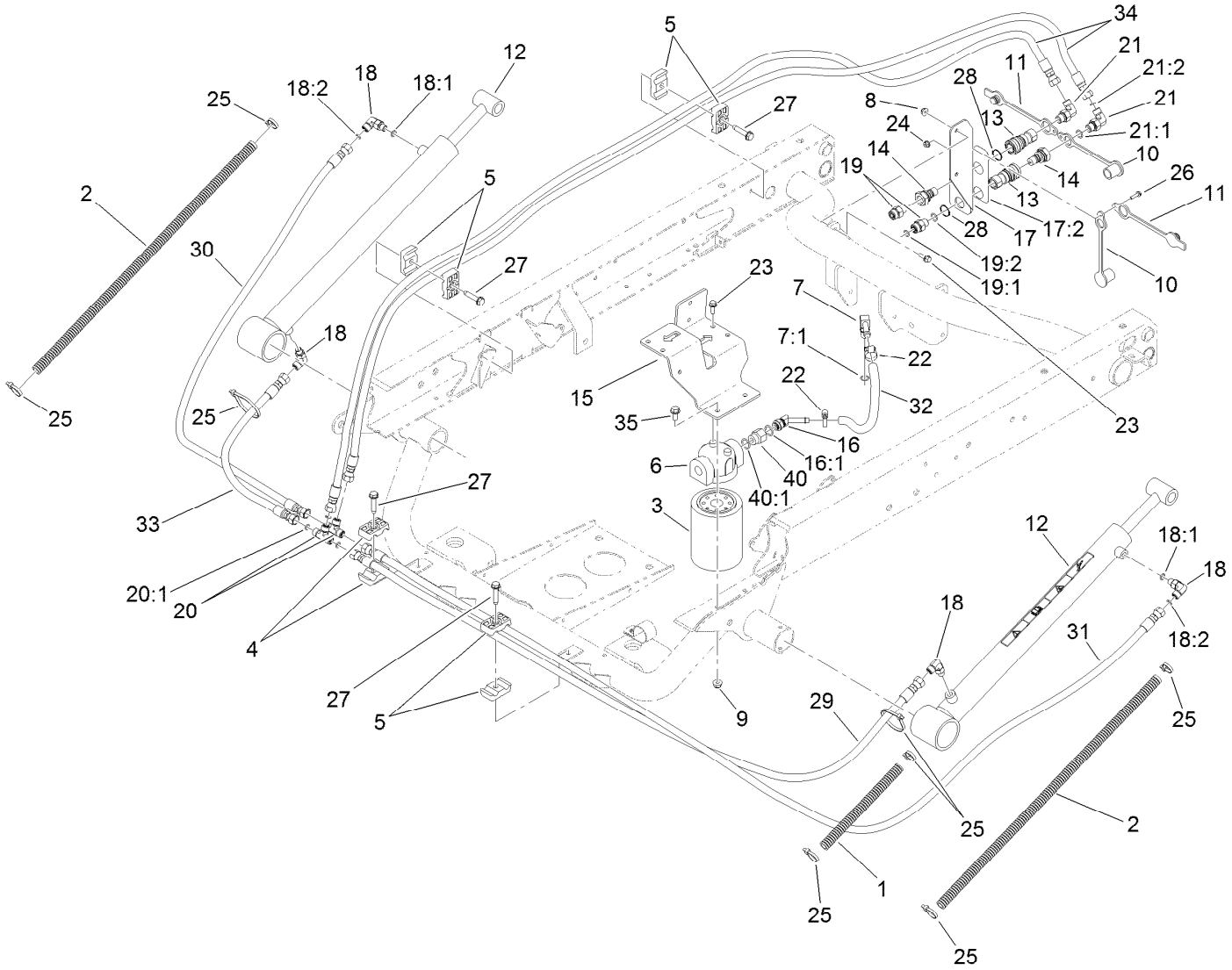


# Hydraulic Lift Cylinder Assembly (continued)

| Ref. | Part Number | Qty. | Description |
|---|---|---|---|
| 33 | 110-0931 | 1 | Hose-HYD |
| 34 | 106-3680 | 2 | Hose-HYD |
| 35 | 3234-5 | 2 | Screw-HHF |

| Ref. | Part Number | Qty. | Description |
|---|---|---|---|
| 40 | 353-397 | 1 | Reducer-Adapter |
| 40:1 | 237-79 | 1 | O-Ring |

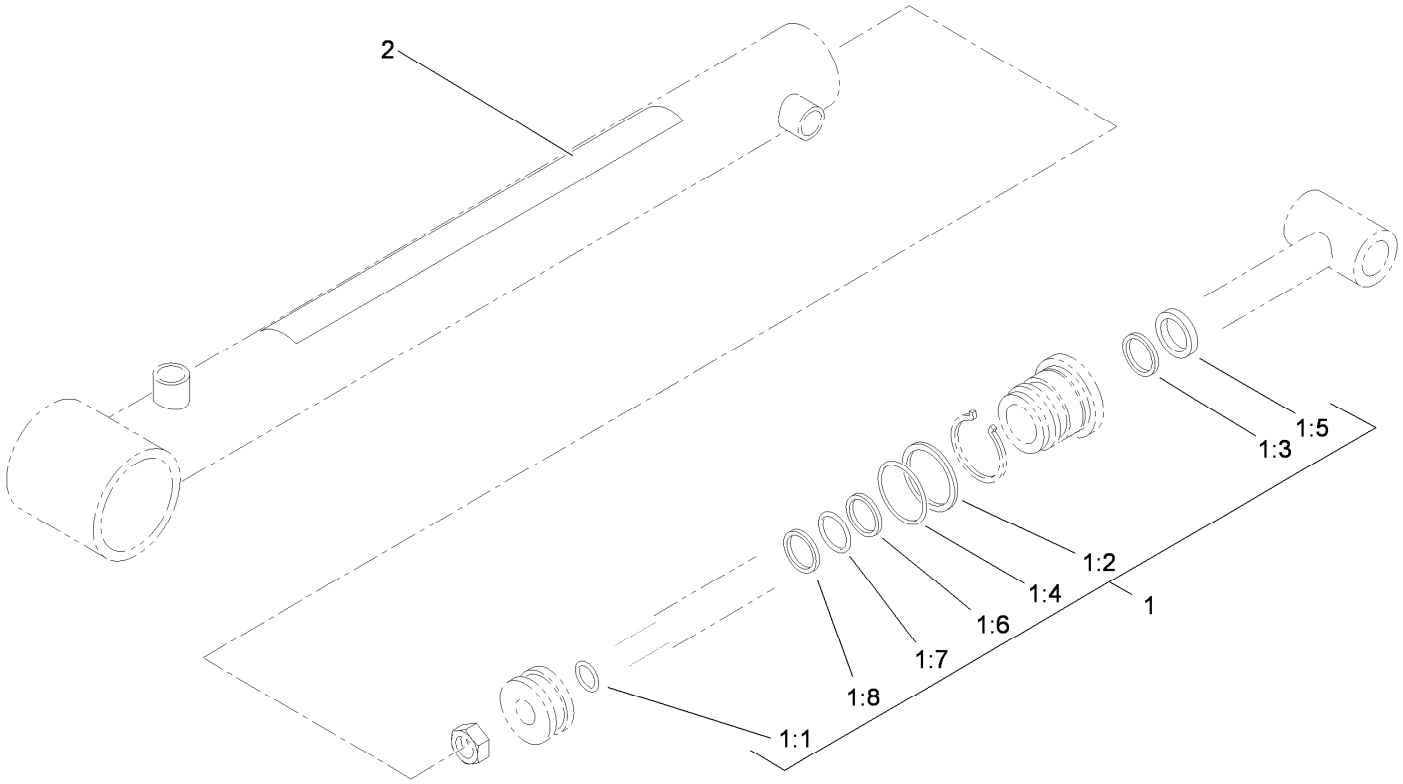


# Hydraulic Cylinder Assembly No. 106-7939

| *Ref.* | *Part Number* | *Qty.* | *Description* |
|---|---|---|---|
| 1 | 106-7941 | 1 | Seal Kit |
| 1:1 | | 1 | O-Ring ● |
| 1:2 | | 1 | O-Ring ● |
| 1:3 | | 1 | Seal ● |
| 1:4 | | 1 | Back-Up ● |
| 1:5 | | 1 | Wiper ● |
| 1:6 | | 1 | Seal ● |
| 1:7 | | 1 | O-Ring ● |
| 1:8 | | 1 | Ring-Wear ● |
| 2 | 93-9852 | 1 | Decal-Warning |

● Not serviced separately

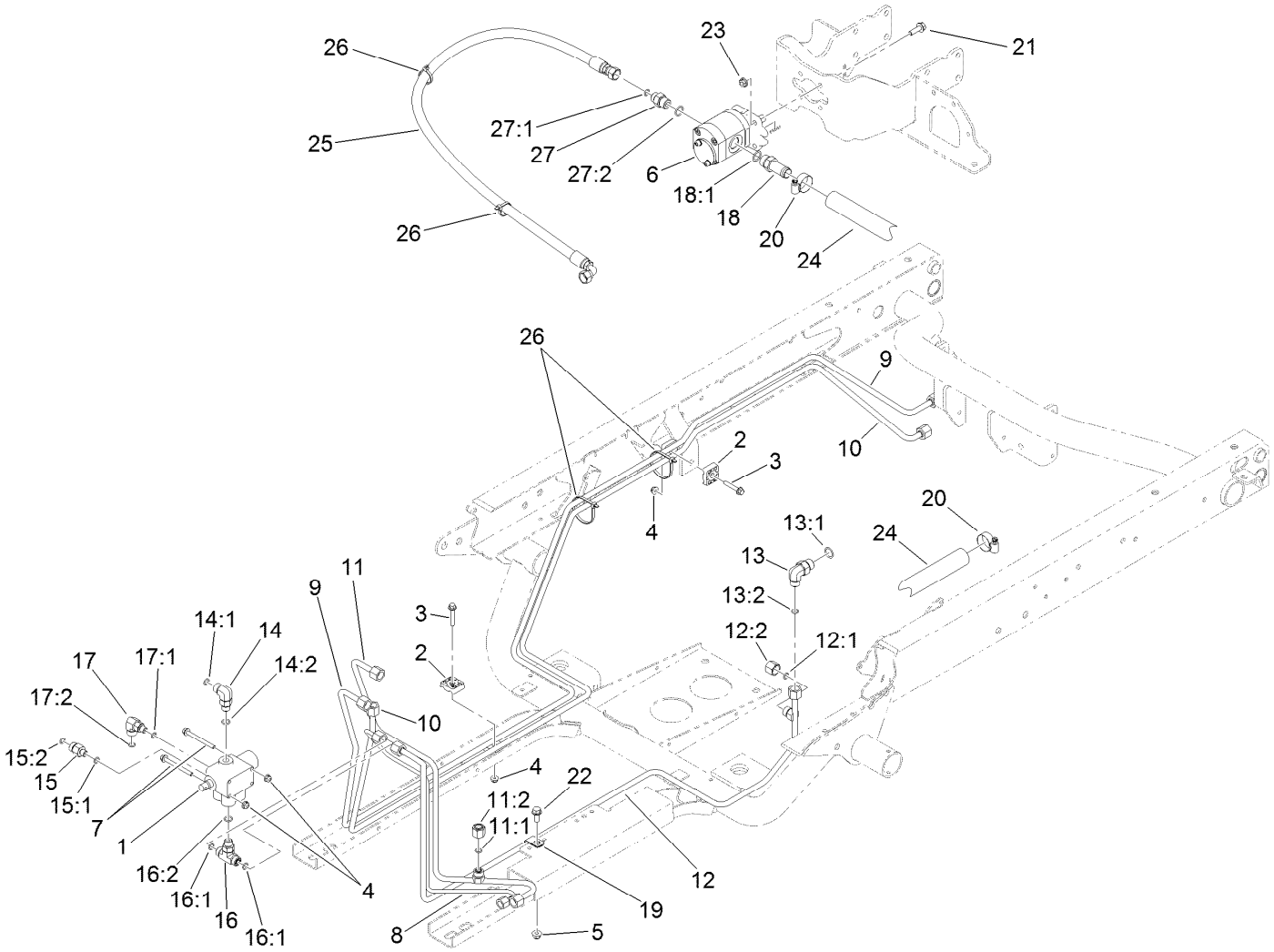


# Main Hydraulic Pump and Lift Valve Assembly

| Ref. | Part Number | Qty. | Description |
|---|---|---|---|
| 1 | 43-1950 | 1 | HYD Control Valve ASM |
| 2 | 56-7973 | 4 | Clamp-Tube |
| 3 | 94-5781 | 2 | Screw-HHF |
| 4 | 104-7201 | 4 | Nut-HF |
| 5 | 104-8300 | 1 | Nut-HF, NI |
| 6 | 114-8302 | 1 | HYD Pump ASM |
| 7 | 114-8410 | 2 | Screw-HHF |
| 8 | 127-8605 | 1 | Tube-HYD |
| 9 | 115-2217 | 1 | Tube-HYD |
| 10 | 115-2218 | 1 | Tube-HYD |
| 11 | 127-8604 | 1 | Tube-HYD |
| 11:1 | 237-22 | 1 | O-Ring |
| 11:2 | 340-117 | 1 | Cap |
| 12 | 127-8752 | 1 | Tube-HYD |
| 12:1 | 237-22 | 1 | O-Ring |
| 12:2 | 340-117 | 1 | Cap |
| 13 | 340-18 | 1 | Fitting-HYD, 90 DEG |
| 13:1 | 237-79 | 1 | O-Ring |
| 13:2 | 237-22 | 1 | O-Ring |
| 14 | 340-77 | 1 | Fitting-Elbow, 90 DEG |
| 14:1 | 237-22 | 1 | O-Ring |

| Ref. | Part Number | Qty. | Description |
|---|---|---|---|
| 14:2 | 237-42 | 1 | O-Ring |
| 15 | 340-88 | 1 | Fitting-Straight |
| 15:1 | 237-22 | 1 | O-Ring |
| 15:2 | 237-78 | 1 | O-Ring |
| 16 | 340-94 | 1 | Adapter |
| 16:1 | 237-22 | 2 | O-Ring |
| 16:2 | 237-42 | 1 | O-Ring |
| 17 | 340-97 | 1 | Fitting-Elbow, 90 DEG |
| 17:1 | 237-22 | 1 | O-Ring |
| 17:2 | 237-78 | 1 | O-Ring |
| 18 | 354-136 | 1 | Fitting-STR |
| 18:1 | 237-80 | 1 | O-Ring |
| 19 | 2412-113 | 1 | Clamp-R |
| 20 | 2412-129 | 2 | Clamp-Hose |
| 21 | 3234-17 | 4 | Screw-HHF |
| 22 | 3234-5 | 1 | Screw-HHF |
| 23 | 32128-20 | 4 | Nut-HF |
| 24 | 87-3670 | 1 | Hose-Suction |
| 25 | 121-6283 | 1 | Hose-HYD |
| 26 | 3290-379 | 4 | Tie-Cable |
| 27 | 340-3 | 1 | Fitting-Straight |

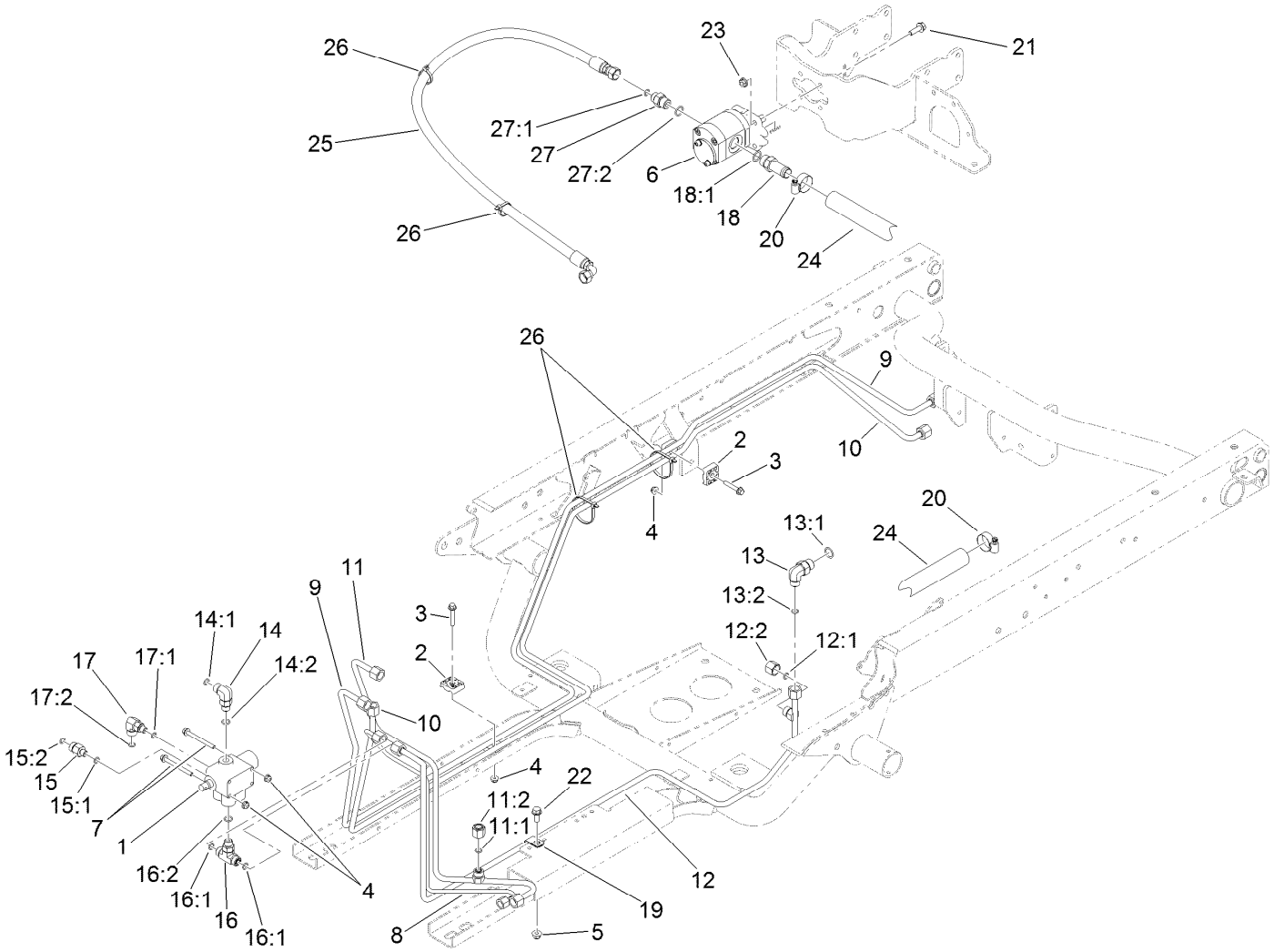


# Main Hydraulic Pump and Lift Valve Assembly (continued)

| *Ref.* | *Part Number* | *Qty.* | *Description* |
|---|---|---|---|
| 27:1 | 237-22 | 1 | O-Ring |
| 27:2 | 237-79 | 1 | O-Ring |

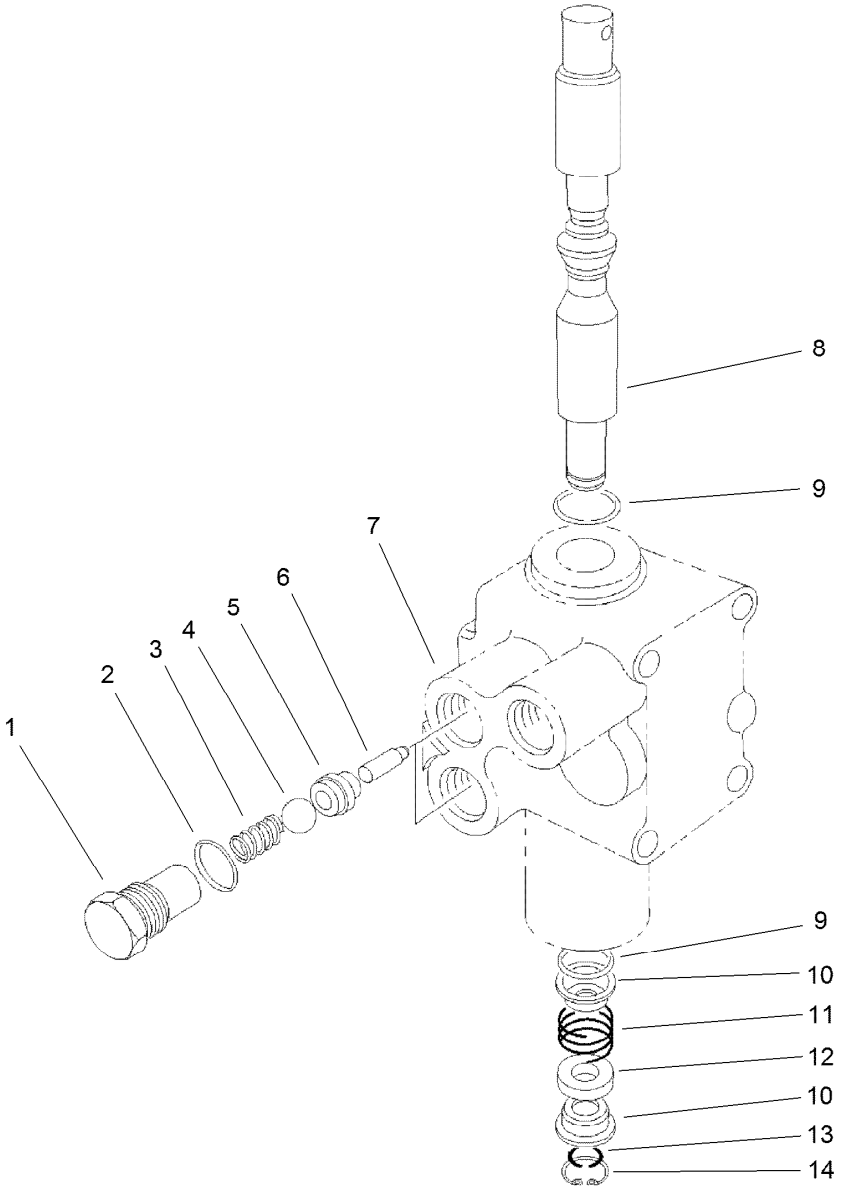


# Control Valve Assembly No. 43-1950

| Ref. | Part Number | Qty. | Description |
|---|---|---|---|
| 1 | 22-8330 | 2 | Plug |
| 2 | 237-42 | 2 | O-Ring |
| 3 | 22-8340 | 2 | Spring |
| 4 | 22-8350 | 2 | Ball |
| 5 | 22-8370 | 2 | Seat-Valve |
| 6 | 22-8360 | 2 | Pin |
| 7 | | 1 | Body ● |
| 8 | 22-8420 | 1 | Spool |
| 9 | 22-8500 | 2 | O-Ring |
| 10 | 22-8380 | 2 | Retainer |
| 11 | 22-8410 | 1 | Spring |
| 12 | 23-3030 | 1 | Spacer |
| 13 | 22-8480 | 1 | Ring-Snap |
| 14 | 22-8490 | 1 | Ring-Snap |

● Not serviced separately

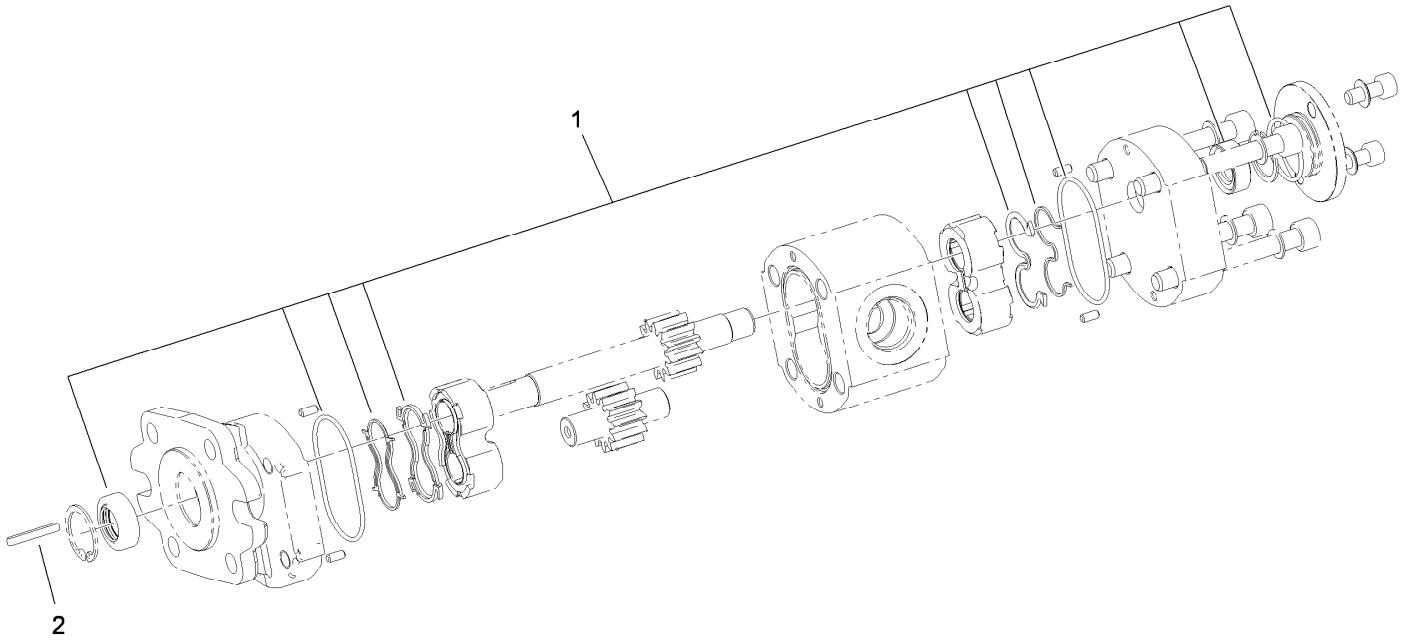


# Hydraulic Gear Pump Assembly No. 114-8302

| *Ref.* | *Part Number* | *Qty.* | *Description* |
|---|---|---|---|
| 1 | 115-8696 | 1 | Seal Kit |
| 2 | 115-7855 | 1 | Key-Square |

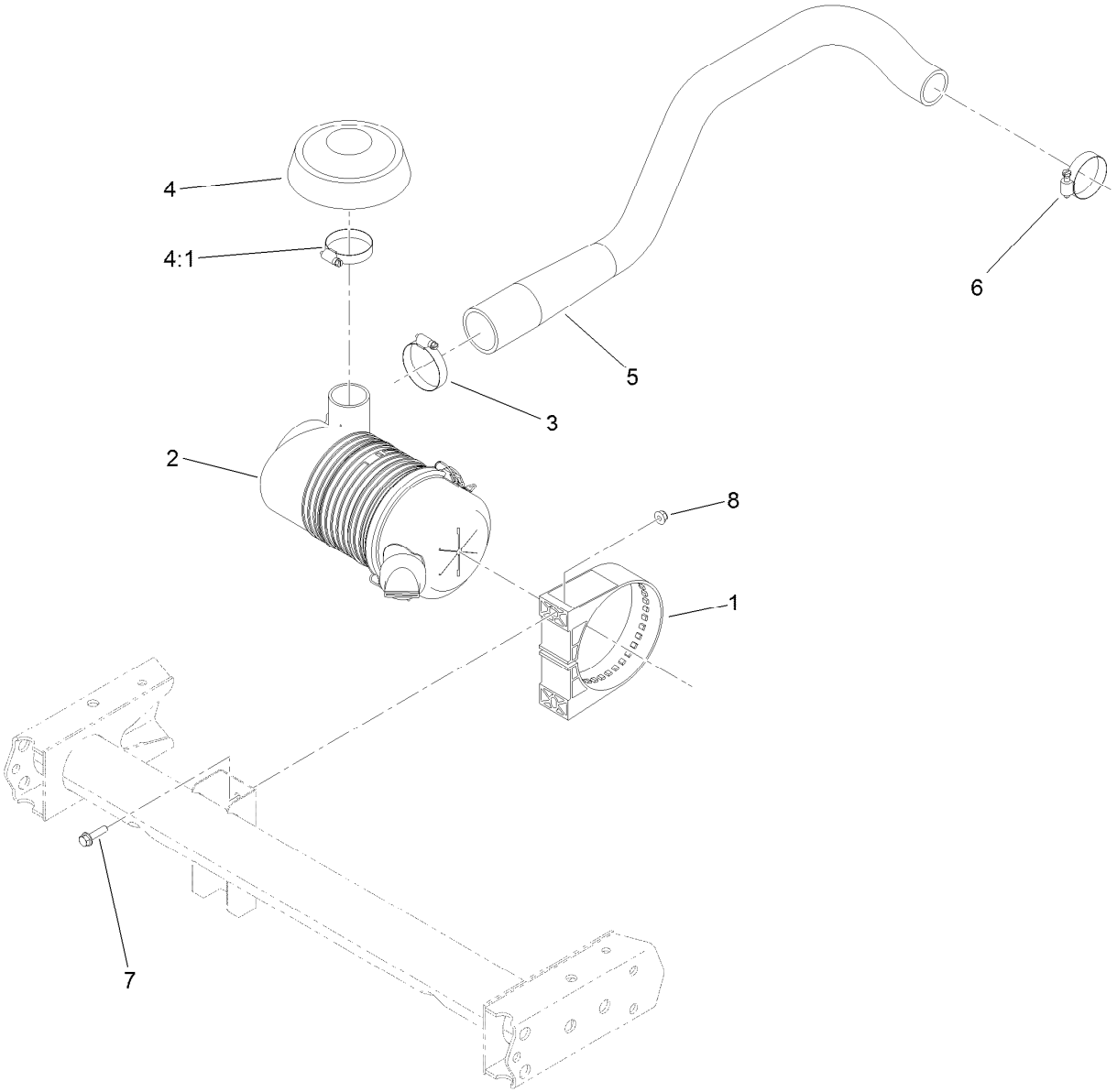


# Air Cleaner Assembly

| Ref. | Part Number | Qty. | Description |
|---|---|---|---|
| 1 | 98-4525 | 1 | Bracket-Cleaner, Air |
| 2 | 106-5277 | 1 | Air Cleaner ASM |
| 3 | 2412-130 | 1 | Clamp-Hose |
| 4 | 105-2539 | 1 | Cap |
| 4:1 | 2412-130 | 1 | Clamp-Hose |
| 5 | 120-5097 | 1 | Hose-Intake, Air (Diesel) |
| 6 | 2412-3 | 1 | Clamp-Hose |
| 7 | 3234-36 | 2 | Screw-HHF |
| 8 | 104-8300 | 2 | Nut-HF, NI |

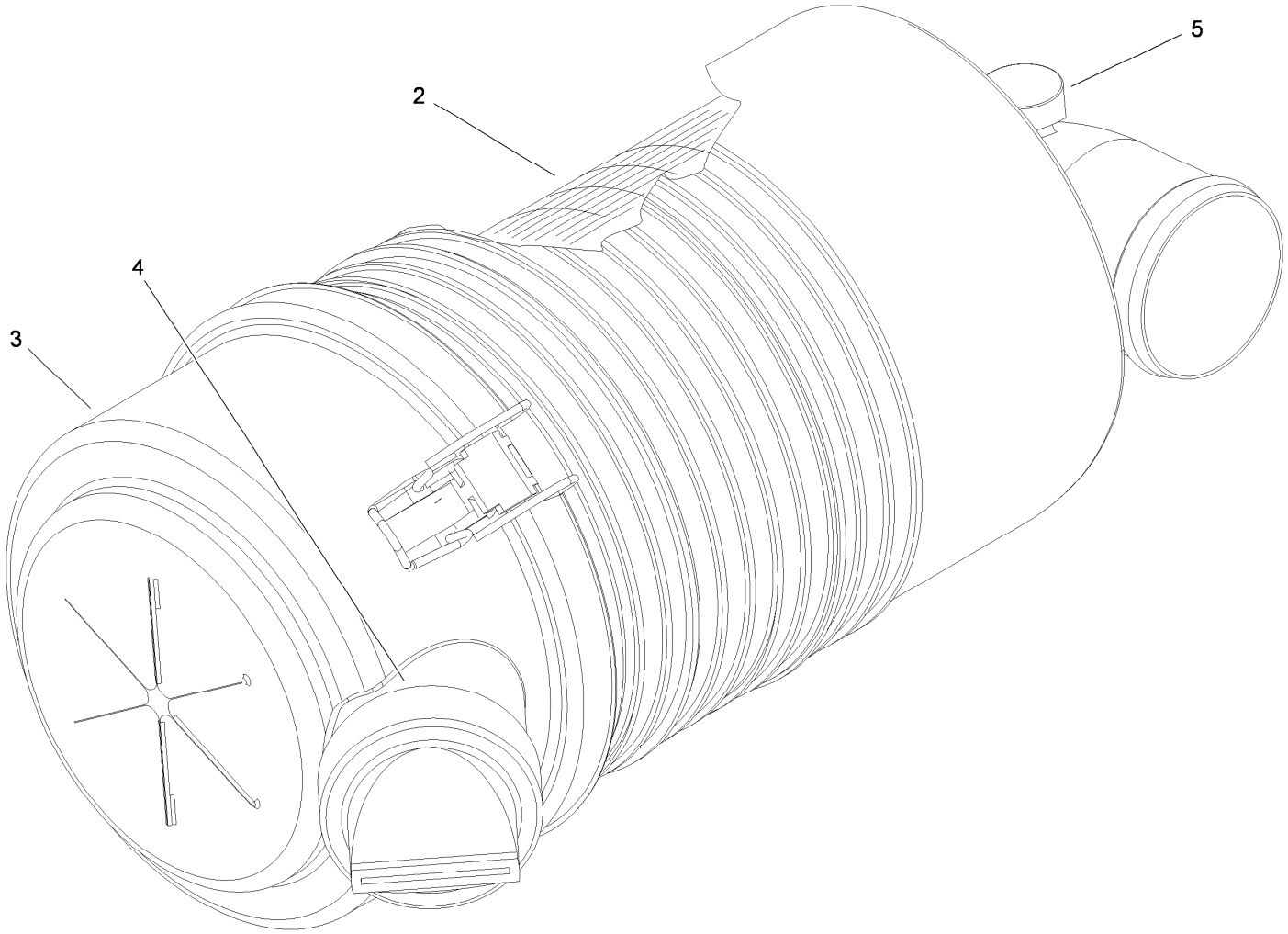


# Air Cleaner Assembly No. 106-5277

| *Ref.* | *Part Number* | *Qty.* | *Description* |
|---|---|---|---|
| 2 | 108-3810 | 1 | Filter-Air |
| 3 | 98-9771 | 1 | Cover ASM |
| 4 | 87-9400 | 1 | Valve-Vacuator |
| 5 | 285-17 | 1 | Plug-Pipe |

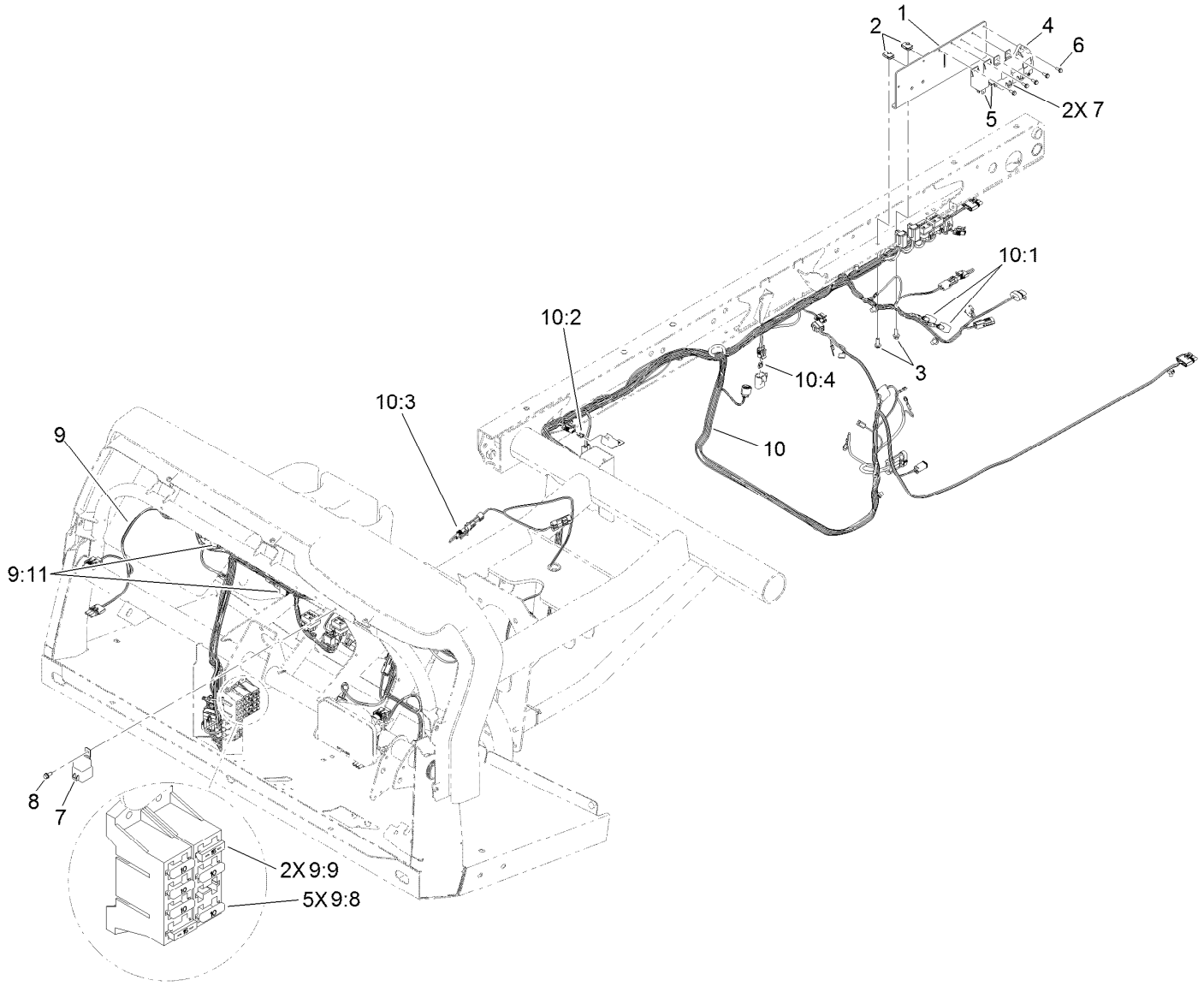


# Front and Rear Wire Harness Assembly

| Ref. | Part Number | Qty. | Description |
|---|---|---|---|
| 1 | 115-2225 | 1 | Bracket-Relay |
| 2 | 107069 | 2 | Clip |
| 3 | 3234-4 | 2 | Screw-HHF |
| 4 | 98-7611 | 1 | Controller-Glow |
| 5 | 99-7435 | 2 | Relay |
| 6 | 32144-112 | 5 | Screw-HWH |
| 7 | 99-7430 | 3 | Relay-Mini |
| 8 | 32144-10 | 1 | Screw-HWH |
| 9 | 122-0822 | 1 | Harness-Wire, Front |

| Ref. | Part Number | Qty. | Description |
|---|---|---|---|
| 9:8 | 218-578 | 5 | Fuse-Blade, 10 Amp |
| 9:9 | 109355 | 2 | Fuse-Blade, 15 Amp |
| 9:11 | 100-4918 | 2 | Diode |
| 10 | 120-3975 | 1 | Harness-Wire, Rear |
| 10:1 | 100-4918 | 2 | Diode |
| 10:2 | 121-8870 | 1 | Fuse-Mini Blade, 30 Amp |
| 10:3 | 119-7787 | 1 | Harness-Wire, Vertical Lift Shunt |
| 10:4 | 121-8867 | 1 | Fuse-Mini Blade, 15 Amp |

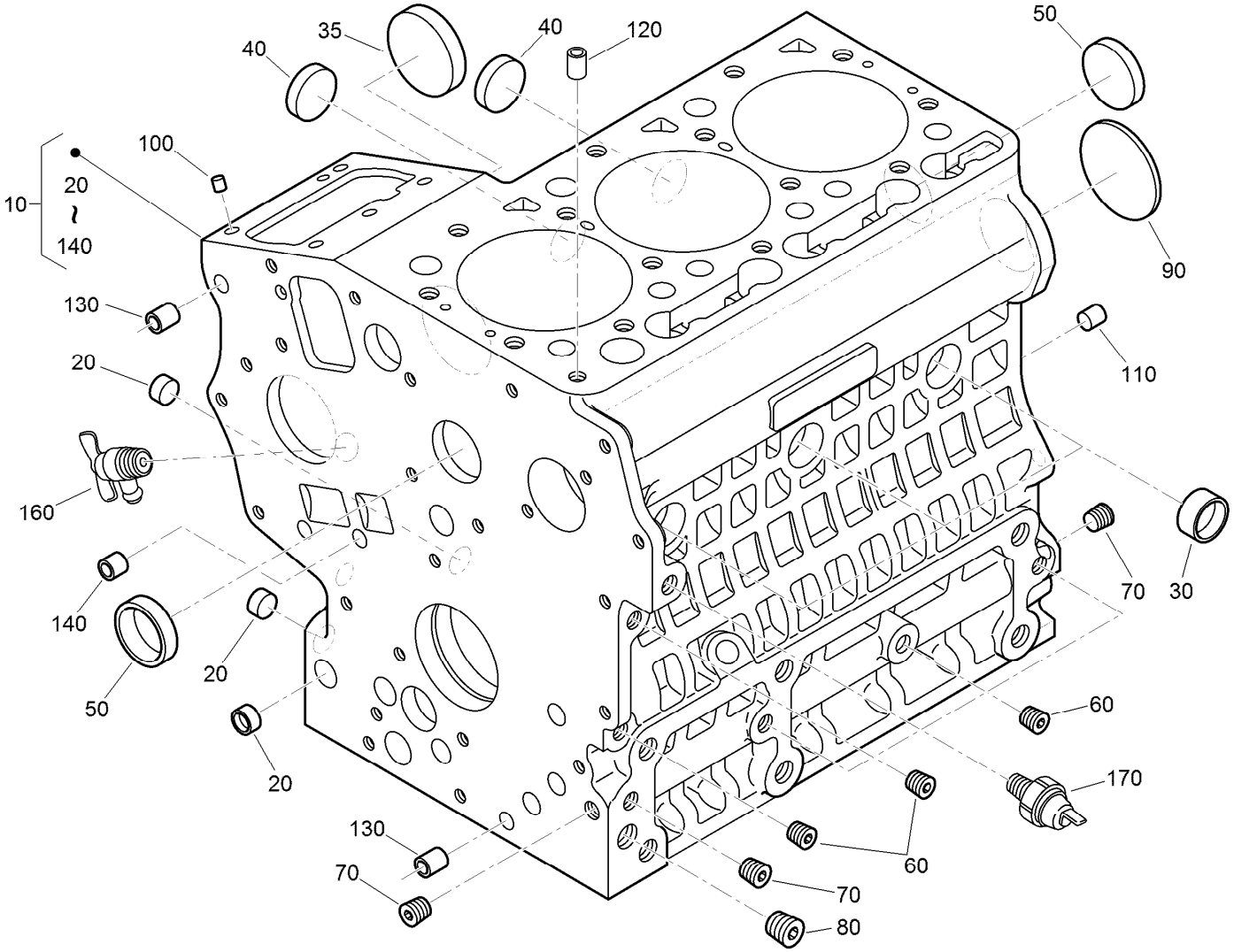


# Crankcase Assembly

| Ref. | Part Number | Qty. | Description |
|---|---|---|---|
| 10 | 130-1486 | 1 | Crankcase ASM |
| 20 | 100-2019 | 3 | Cap-Sealing |
| 30 | 100-2020 | 3 | Cap-Sealing |
| 35 | 110-3702 | 2 | Cap-Sealing |
| 40 | 98-9398 | 2 | Cap-Sealing |
| 50 | 98-9687 | 5 | Plug |
| 60 | 98-7487 | 3 | Plug |
| 70 | 98-7488 | 1 | Plug |
| 80 | 100-1851 | 1 | Plug-Expansion |

| Ref. | Part Number | Qty. | Description |
|---|---|---|---|
| 90 | 98-9375 | 2 | Pin-Straight |
| 100 | 98-9377 | 2 | Pin-Straight |
| 110 | 98-7506 | 1 | Pin-Pipe |
| 120 | 100-2051 | 2 | Pin-Pipe |
| 130 | 100-2051 | 2 | Pin-Pipe |
| 140 | 100-1991 | 1 | Cover-Fuel, Camshaft |
| 160 | 120-3121 | 1 | Draincock ASM |
| 170 | 98-9416 | 1 | Switch-Oil |

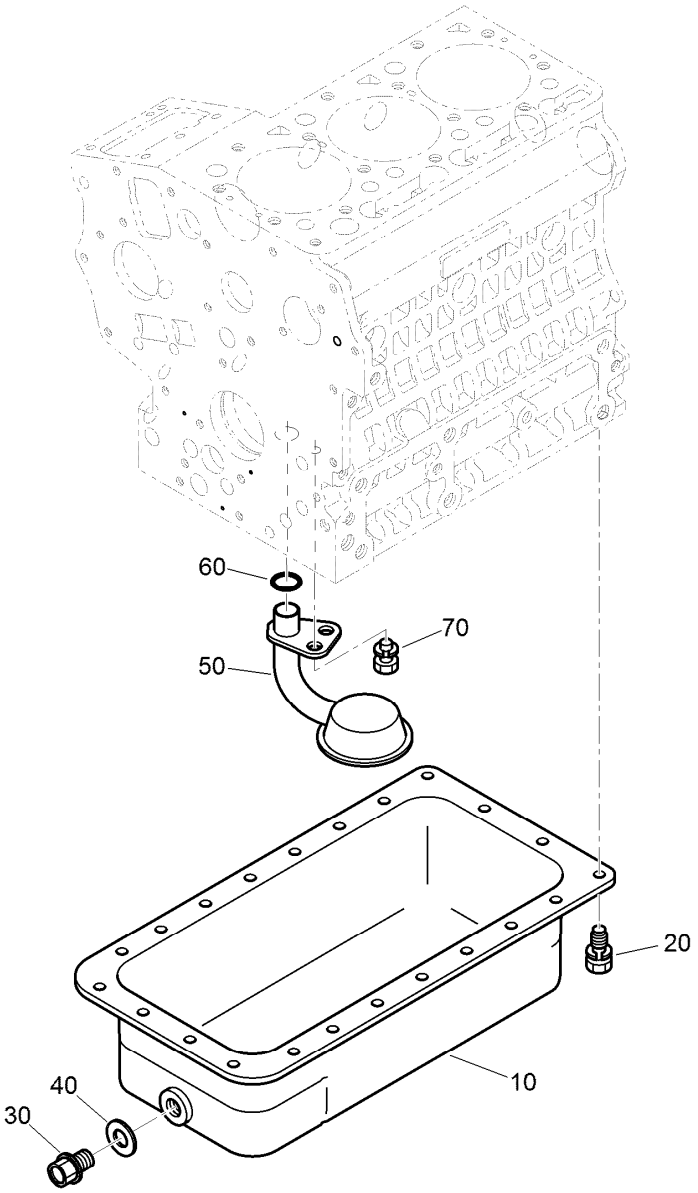


# Oil Pan Assembly

| Ref. | Part Number | Qty. | Description |
|---|---|---|---|
| 10 | 125-9056 | 1 | Oil Pan ASM |
| 20 | 98-9350 | 22 | Bolt |
| 30 | 114-8151 | 1 | Plug-Drain |
| 40 | 98-7524 | 1 | Gasket |
| 50 | 125-9052 | 1 | Tube-Pick Up, Oil |
| 60 | 105-3776 | 1 | O-Ring |
| 70 | 100-9195 | 1 | Bolt |

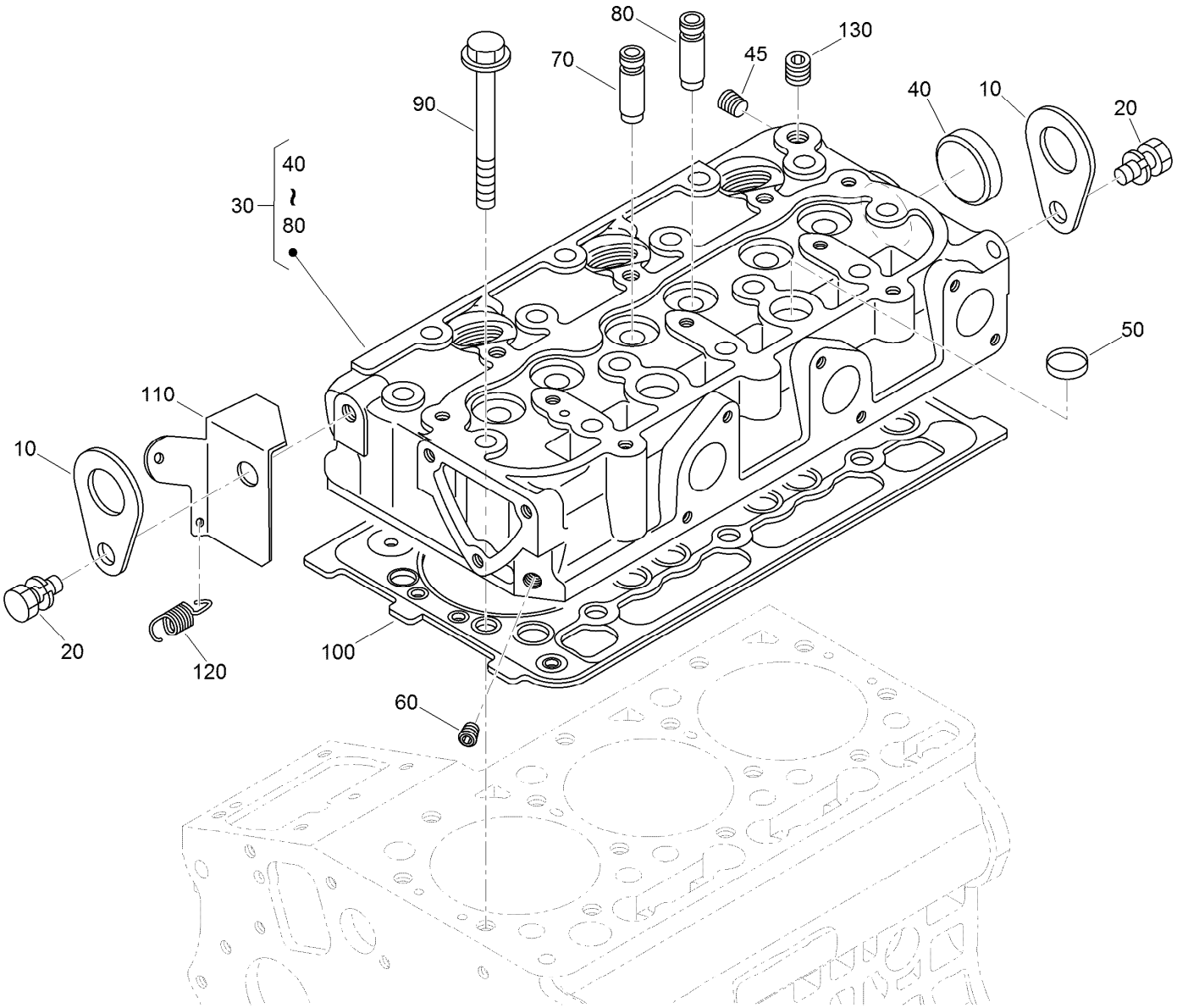


# Cylinder Head Assembly

| Ref. | Part Number | Qty. | Description |
|---|---|---|---|
| 10 | 98-7531 | 2 | Hook-Engine |
| 20 | 98-7526 | 2 | Bolt |
| 30 | 130-1533 | 1 | Cylinder Head ASM |
| 40 | 105-3705 | 1 | Cap-Sealing |
| 45 | 125-9062 | 1 | Plug |
| 50 | 98-9389 | 2 | Cap-Sealing |
| 60 | 98-9687 | 1 | Plug |
| 70 | 100-1882 | 3 | Guide-Valve, Inlet |
| 80 | 100-1883 | 3 | Guide-Valve, Exhaust |
| 90 | 100-1820 | 14 | Bolt-Head, Cylinder |
| 100 | 112-2520 | 1 | Gasket-Head, Cylinder |
| 110 | 121-3810 | 1 | Stay |
| 120 | 121-3820 | 1 | Spring-Return |
| 130 | 98-9444 | 1 | Plug |

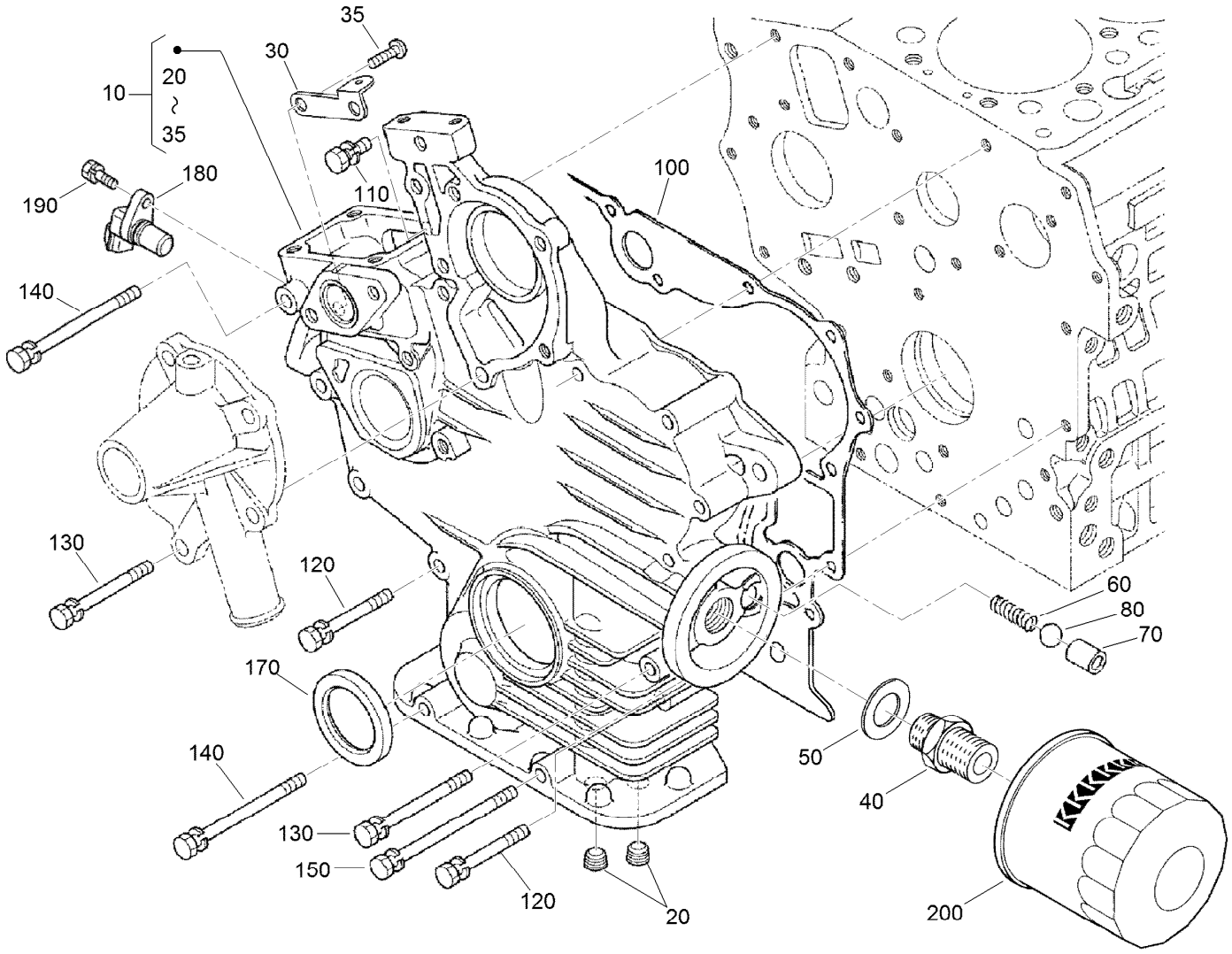


# Gear Case and Oil Filter Cartridge Assembly

| Ref. | Part Number | Qty. | Description |
|---|---|---|---|
| 10 | 125-9057 | 1 | Gear Case ASM |
| 20 | 98-7488 | 2 | Plug |
| 30 | 110-3708 | 1 | Stay-Spring, Start |
| 35 | 100-2040 | 2 | Screw |
| 40 | 98-9388 | 1 | Joint-Pipe |
| 50 | 100-1926 | 1 | Washer-Plain |
| 60 | 100-2004 | 1 | Spring |
| 70 | 100-1894 | 1 | Seat-Valve |
| 80 | 100-1792 | 1 | Ball |
| 100 | 117-0327 | 1 | Gasket-Case, Gear |

| Ref. | Part Number | Qty. | Description |
|---|---|---|---|
| 110 | 127-0403 | 1 | Bolt-Flange |
| 120 | 125-9063 | 9 | Bolt-Sems |
| 130 | 100-1922 | 2 | Bolt |
| 140 | 98-9357 | 2 | Bolt |
| 150 | 110-3710 | 1 | Bolt |
| 170 | 120-7852 | 1 | Seal-Oil |
| 180 | 125-9058 | 1 | Sensor-Revolution |
| 190 | 98-7692 | 1 | Bolt |
| 200 | 115-8189 | 1 | Filter-Oil, Engine |

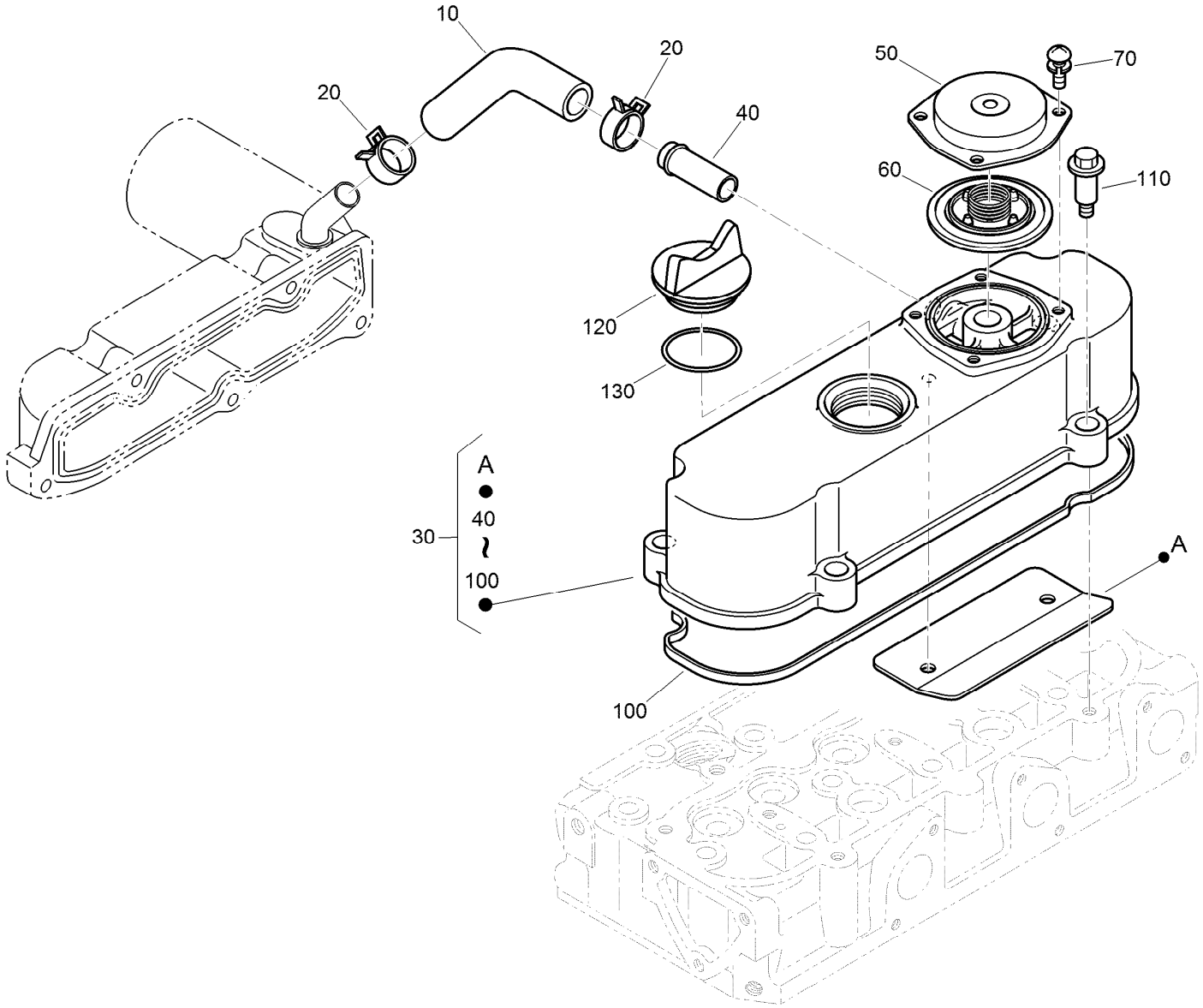


# Cylinder Head Cover Assembly

| Ref. | Part Number | Qty. | Description |
|---|---|---|---|
| 10 | 120-3139 | 1 | Tube-Breather |
| 20 | 110-3712 | 2 | Clamp-Hose |
| 30 | 112-8332 | 1 | Cylinder Head Cover ASM |
| 40 | 98-9580 | 1 | Pipe-Return, Water |
| 50 | 110-3714 | 1 | Cover-Breather |
| 60 | 110-3715 | 1 | Valve-Breather |
| 70 | 98-9364 | 4 | Screw (With Washer) |
| 100 | 112-2521 | 1 | Gasket-Cover, Head |
| 110 | 108-7063 | 4 | Bolt |
| 120 | 107-9075 | 1 | Plug-Filler, Oil |
| 130 | 99-3446 | 1 | O-Ring |

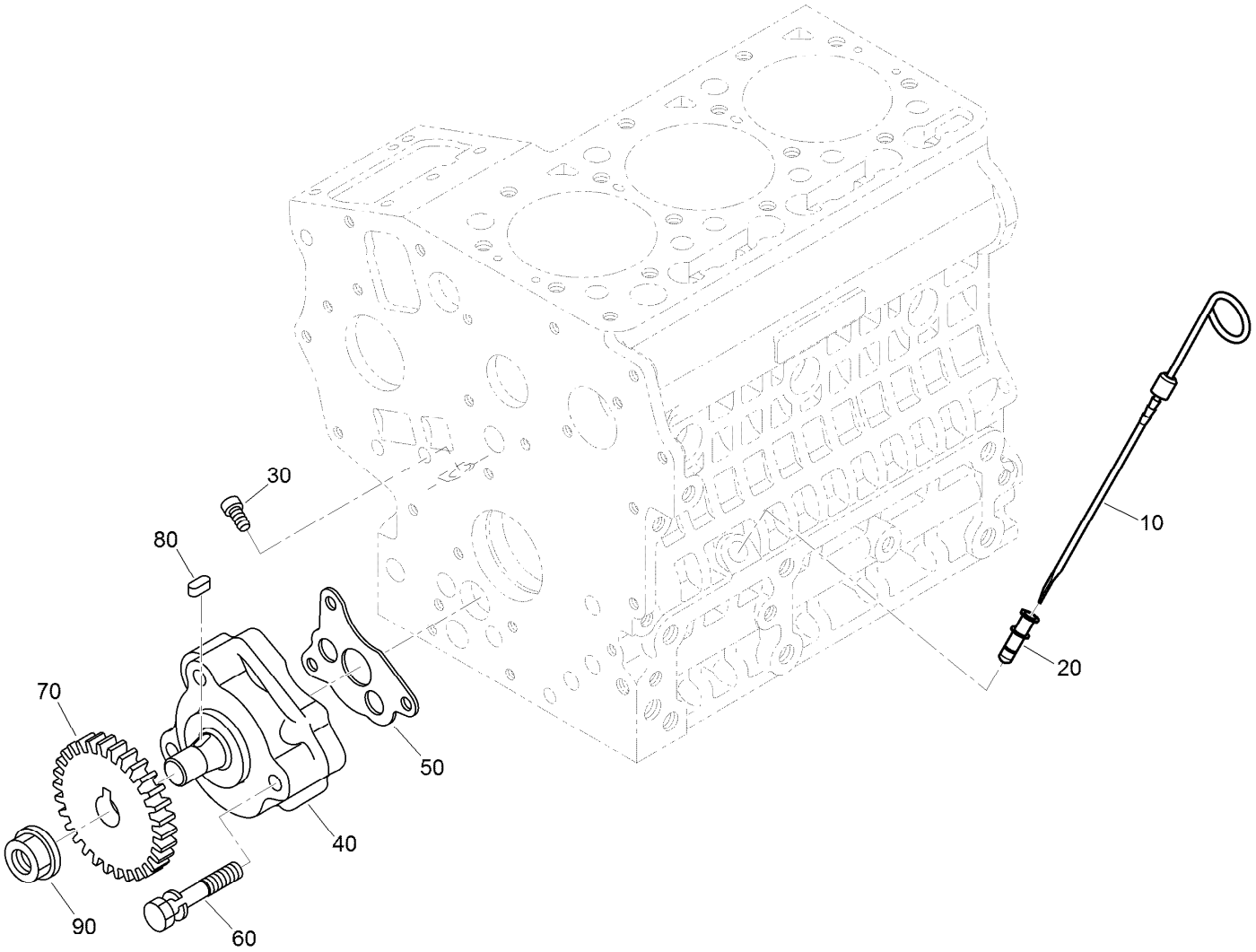


# Oil Pump and Dipstick Assembly

| *Ref.* | *Part Number* | *Qty.* | *Description* |
|---|---|---|---|
| 10 | 110-3719 | 1 | Gauge-Oil |
| 20 | 105-4580 | 1 | Guide-Gauge, Oil |
| 30 | 110-3720 | 1 | Plug-Gauge, Oil |
| 40 | 100-2002 | 1 | Oil Pump ASM |
| 50 | 100-2003 | 1 | Gasket-Pump, Oil |
| 60 | 100-1923 | 3 | Bolt |
| 70 | 130-1419 | 1 | Gear-Drive, Oil Pump |
| 80 | 98-7658 | 1 | Key-Feather |
| 90 | 100-1779 | 1 | Nut-Flange |

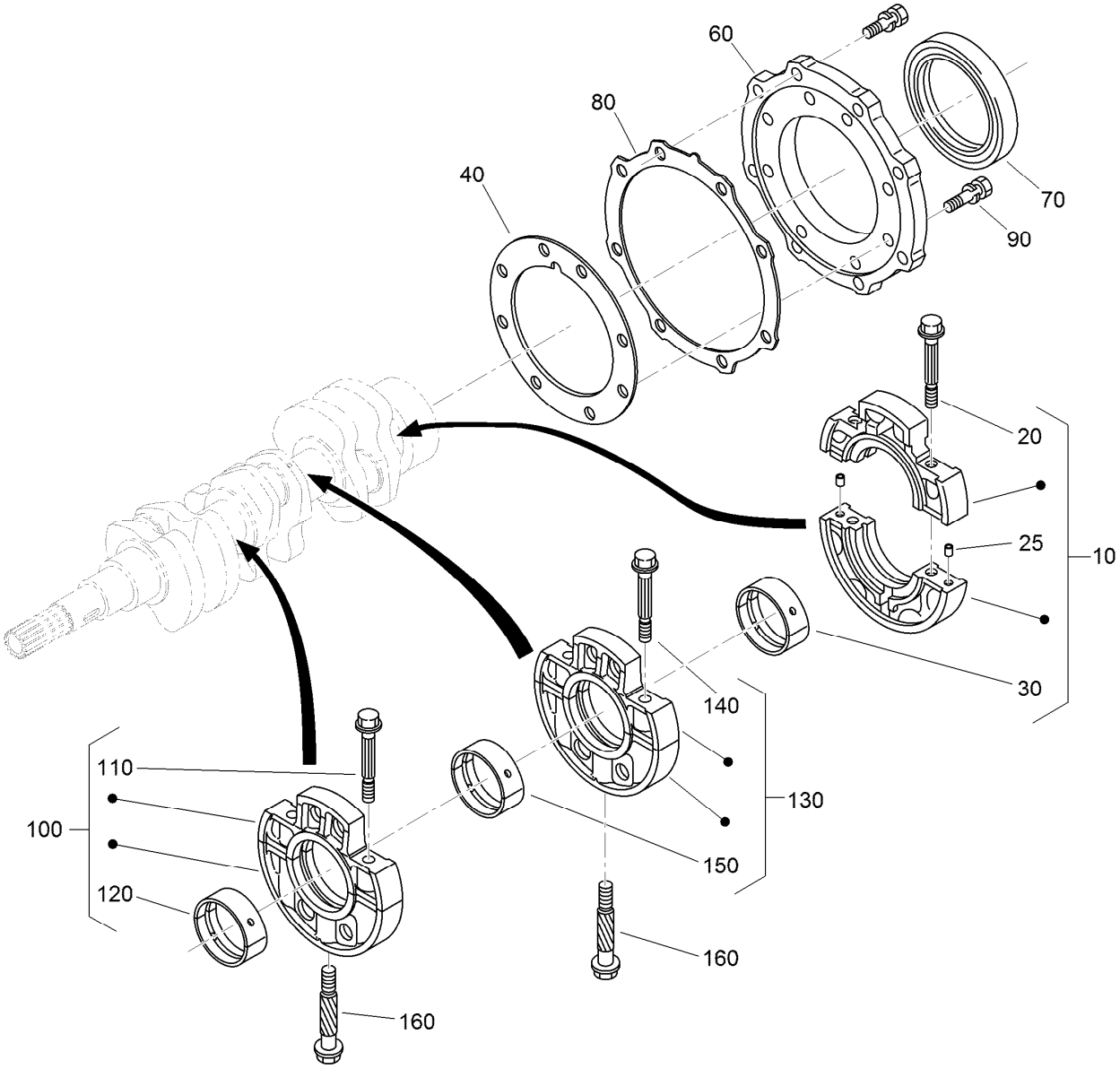


# Main Bearing Case Assembly

| Ref. | Part Number | Qty. | Description |
|---|---|---|---|
| 10 | 125-9064 | 1 | Wheel Bearing Case ASM |
| 20 | 125-9065 | 2 | Bolt-Flange |
| 25 | 125-9082 | 2 | Pin-Straight |
| 30 | 125-9066 | 1 | Crankshaft Metal ASM (STD) |
| 30 | 125-9067 | 1 | Crankshaft Metal ASM (-0.20Mm) |
| 30 | 125-9068 | 1 | Crankshaft Metal ASM (-0.40Mm) |
| 40 | 112-2812 | 1 | Gasket-Case, Bearing |
| 60 | 112-8334 | 1 | Cover-Case, Bearing |
| 70 | 110-3724 | 1 | Seal-Oil |
| 80 | 100-1876 | 1 | Gasket-Cover, Case |
| 90 | 100-1750 | 16 | Bolt |
| 100 | 130-1417 | 1 | Main Bearing Case ASM |
| 110 | 110-3723 | 2 | Bolt-Case, Bearing |

| Ref. | Part Number | Qty. | Description |
|---|---|---|---|
| 120 | 110-3741 | 1 | Crankshaft Metal ASM (STD) |
| 120 | 125-9083 | 1 | Crankshaft Metal ASM (-0.20Mm) |
| 120 | 110-3743 | 1 | Crankshaft Metal ASM (-0.40Mm) |
| 130 | 130-1418 | 1 | Main Bearing Case ASM |
| 140 | 110-3723 | 2 | Bolt-Case, Bearing |
| 150 | 110-3741 | 1 | Crankshaft Metal ASM (STD) |
| 150 | 125-9083 | 1 | Crankshaft Metal ASM (-0.20Mm) |
| 150 | 110-3743 | 1 | Crankshaft Metal ASM (-0.40Mm) |
| 160 | 100-1874 | 2 | Bolt-Case, Bearing |

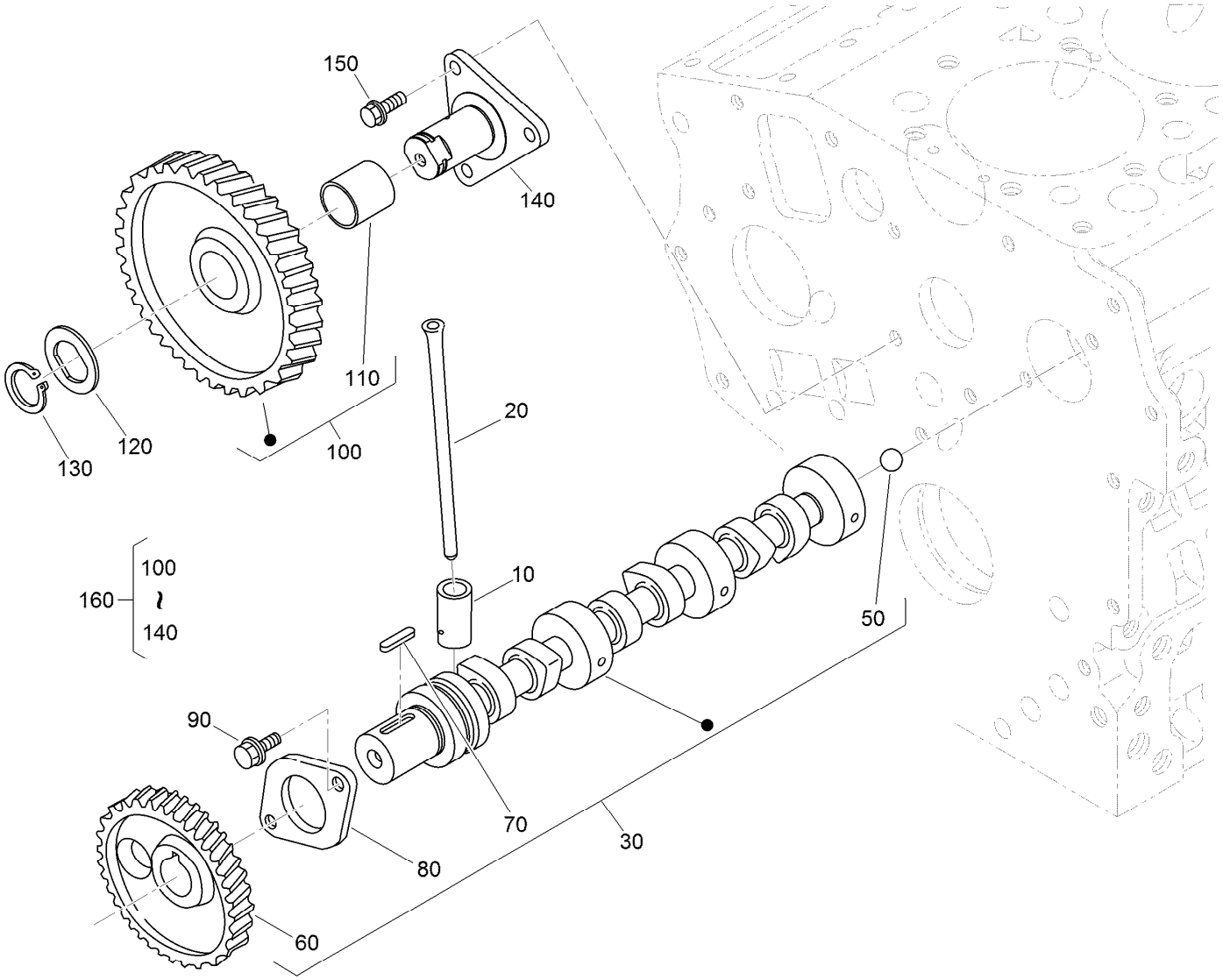


# Camshaft and Idle Gear Shaft Assembly

| *Ref.* | *Part Number* | *Qty.* | *Description* |
|---|---|---|---|
| 10 | 110-3727 | 6 | Tappet |
| 20 | 100-1989 | 6 | Rod-Push |
| 30 | 130-1492 | 1 | Camshaft ASM |
| 50 | 110-3729 | 1 | Ball |
| 60 | 130-1534 | 1 | Gear-Cam |
| 70 | 98-9378 | 1 | Key-Feather |
| 80 | 100-1887 | 1 | Stopper-Camshaft |
| 90 | 98-9350 | 2 | Bolt |
| 100 | 121-2421 | 1 | Idle Gear ASM |
| 110 | 121-2422 | 1 | Bushing |
| 120 | 100-1970 | 1 | Collar-Gear, Idle |
| 130 | 100-1969 | 1 | Ring-Snap |
| 140 | 100-1967 | 1 | Shaft-Gear, Idle |
| 150 | 100-1774 | 3 | Bolt-Flange |
| 160 | 100-2240 | 1 | Idle Gear ASM |

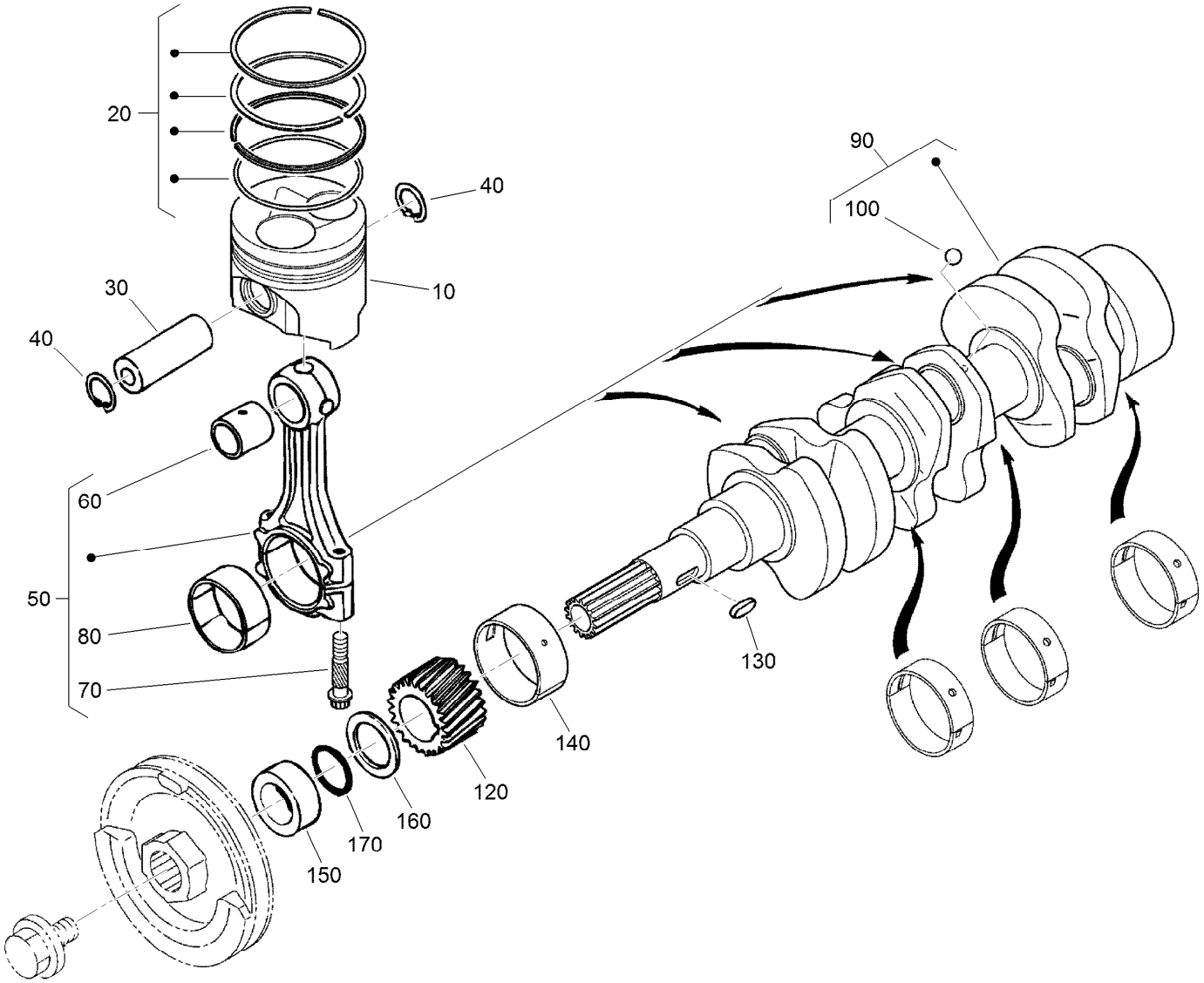


# Piston and Crankshaft Assembly

| Ref. | Part Number | Qty. | Description |
|---|---|---|---|
| 10 | 130-1537 | 3 | Piston |
| 10 | 130-1540 | 3 | Piston |
| 20 | 130-1535 | 3 | Piston Ring ASM |
| 20 | 130-1536 | 3 | Piston Ring ASM |
| 30 | 110-3734 | 3 | Pin-Piston |
| 40 | 100-1835 | 6 | Circlip-Internal |
| 50 | 125-9070 | 3 | Connecting Rod ASM |
| 60 | 110-3736 | 3 | Bushing-Pin, Piston |
| 70 | 100-1999 | 6 | Bolt-Rod, Connecting |
| 80 | 100-2000 | 6 | Metal-Crankpin (STD) |
| 80 | 121-3849 | 3 | Metal-Crankpin (-.20Mm) |

| Ref. | Part Number | Qty. | Description |
|---|---|---|---|
| 80 | 121-2420 | 3 | Metal-Crankpin (-.40Mm) |
| 90 | 117-0308 | 1 | Crankshaft |
| 100 | 100-1791 | 3 | Ball |
| 120 | 100-1891 | 1 | Gear-Crankshaft |
| 130 | 100-1752 | 1 | Key-Feather |
| 140 | 110-3738 | 1 | Metal-Crankshaft (STD) |
| 140 | 121-2424 | 1 | Metal-Crankshaft (-.20Mm) |
| 140 | 121-2425 | 1 | Metal-Crankshaft (-.40Mm) |
| 150 | 100-1890 | 1 | Collar-Crankshaft |
| 160 | 100-1974 | 1 | Slinger-Oil |
| 170 | 100-2209 | 1 | O-Ring |

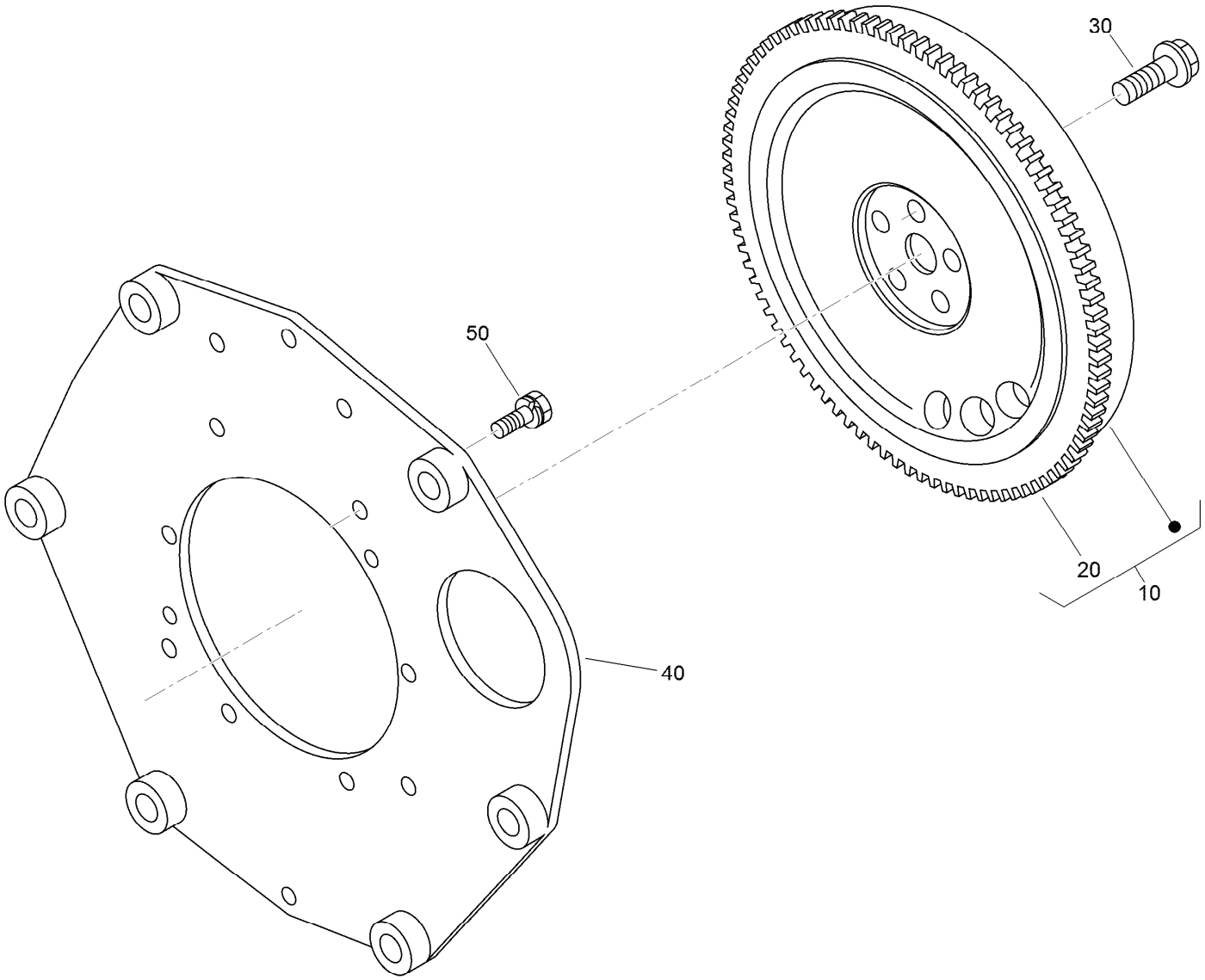


# Flywheel Assembly

| Ref. | Part Number | Qty. | Description |
|---|---|---|---|
| 10 | 125-9054 | 1 | Flywheel ASM |
| 20 | 105-3722 | 1 | Gear-Ring |
| 30 | 125-9051 | 5 | Bolt-Flywheel |
| 40 | 125-9053 | 1 | Plate-Rear End |
| 50 | 110-3754 | 10 | Bolt |

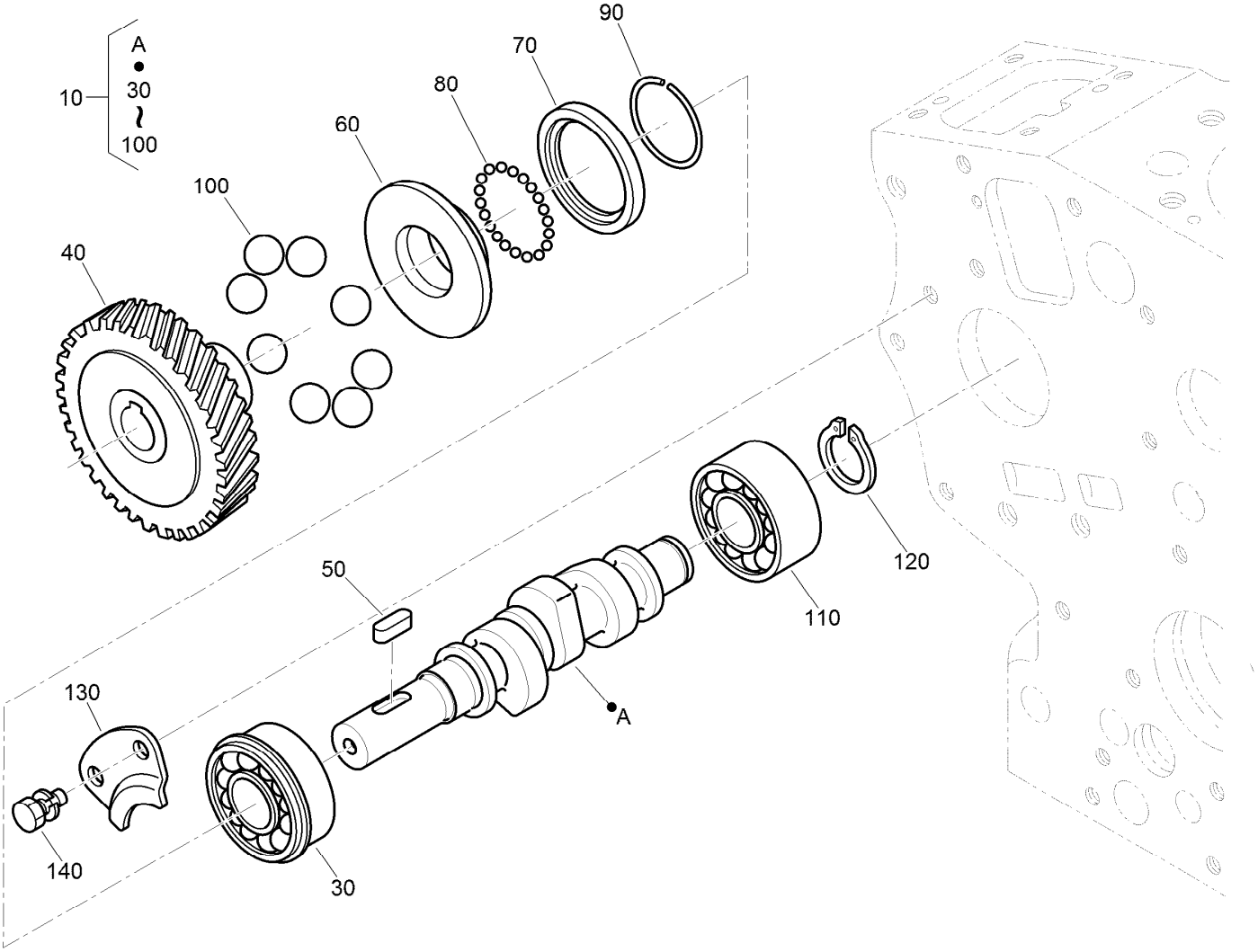


# Fuel Camshaft Assembly

| Ref. | Part Number | Qty. | Description |
|---|---|---|---|
| 10 | 125-9075 | 1 | Fuel Camshaft ASM |
| 30 | 100-1795 | 1 | Bearing-Ball |
| 40 | 100-2006 | 1 | Gear-Pump, Injection |
| 50 | 100-1752 | 1 | Key-Feather |
| 60 | 112-8336 | 1 | Sleeve-Governor |
| 70 | 100-1904 | 1 | Case-Ball, Governor |
| 80 | 100-1790 | 32 | Ball |
| 90 | 100-1843 | 1 | Circ-Clip |
| 100 | 100-1793 | 8 | Ball |
| 110 | 110-3757 | 1 | Bearing-Ball |
| 120 | 100-1784 | 1 | Circ-Clip, External |
| 130 | 100-1888 | 1 | Stopper-Fuel, Camshaft |
| 140 | 98-9350 | 2 | Bolt |

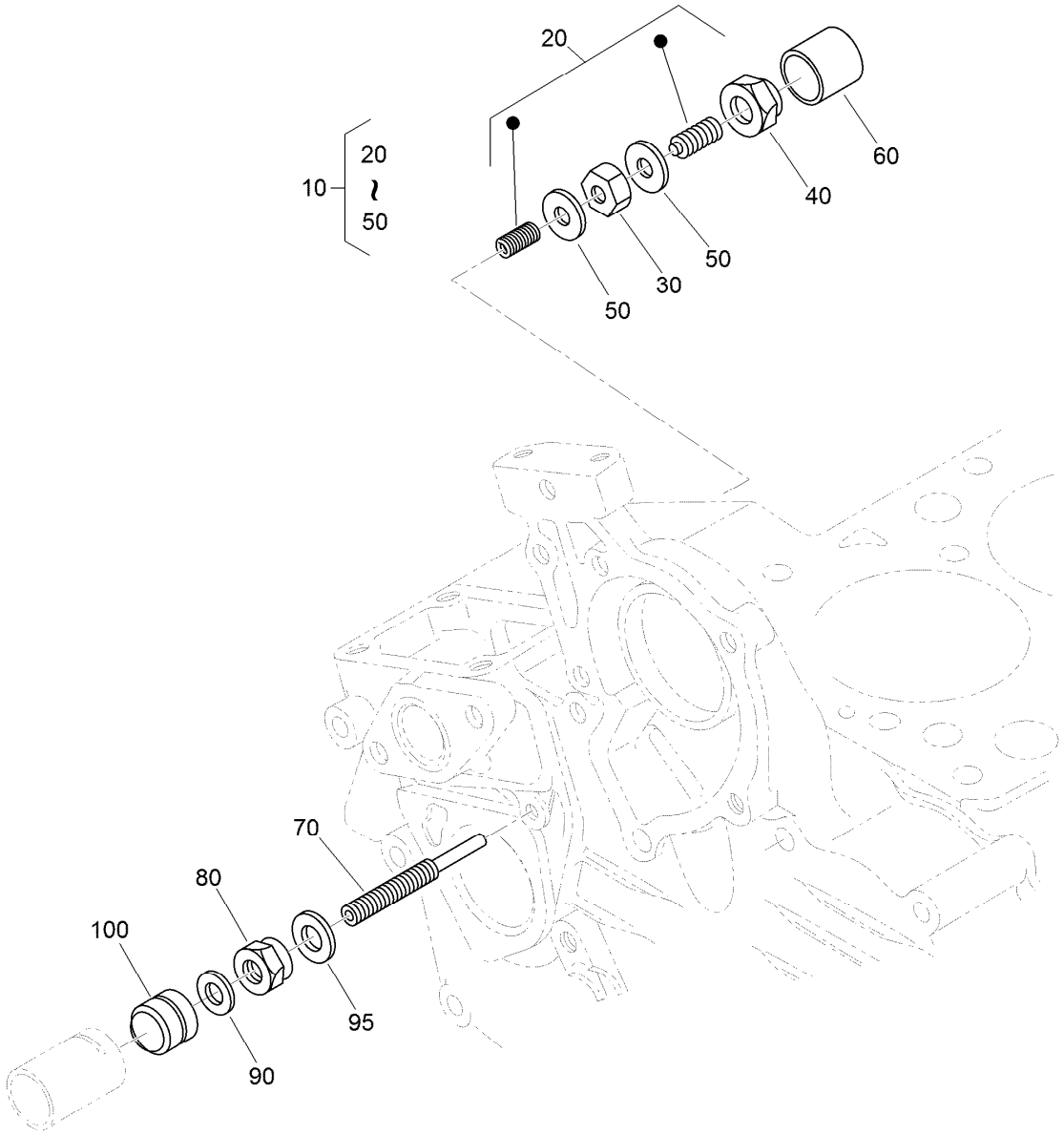


# Idle Apparatus Assembly

| *Ref.* | *Part Number* | *Qty.* | *Description* |
|---|---|---|---|
| 10 | 100-1898 | 1 | Idle Apparatus ASM |
| 20 | 100-1899 | 1 | Adjusting Bolt ASM |
| 30 | 100-1846 | 1 | Nut |
| 40 | 100-1901 | 1 | Nut-Cap |
| 50 | 98-7428 | 2 | Gasket |
| 60 | 100-1902 | 1 | Cap |
| 70 | 110-3758 | 1 | Bolt-Adjusting |
| 80 | 100-2175 | 1 | Nut-Lock |
| 90 | 98-7654 | 1 | Gasket |
| 95 | 107-9081 | 1 | Gasket |
| 100 | 99-8387 | 1 | Nut-Cap |

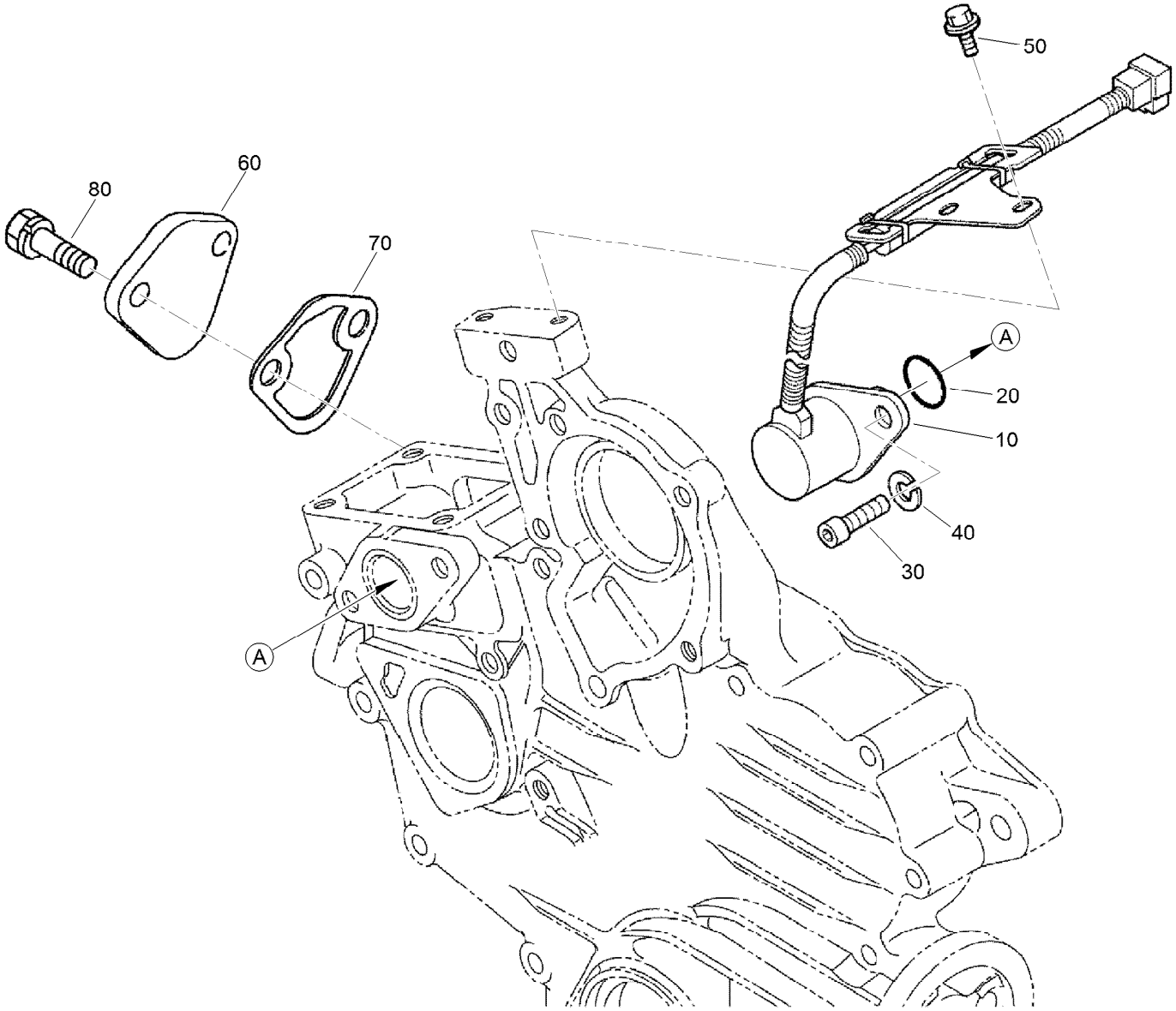


# Stop Solenoid and Fuel Pump Cover Assembly

| *Ref.* | *Part Number* | *Qty.* | *Description* |
|---|---|---|---|
| 10 | 117-2719 | 1 | Solenoid Stop ASM |
| 20 | 110-3762 | 1 | O-Ring |
| 30 | 110-3763 | 2 | Bolt-HSH |
| 40 | 98-7699 | 1 | Washer-Spring |
| 50 | 100-1774 | 2 | Bolt-Flange |
| 60 | 99-3514 | 1 | Cover |
| 70 | 98-9636 | 1 | Gasket-Pump, Fuel |
| 80 | 98-7692 | 2 | Bolt |

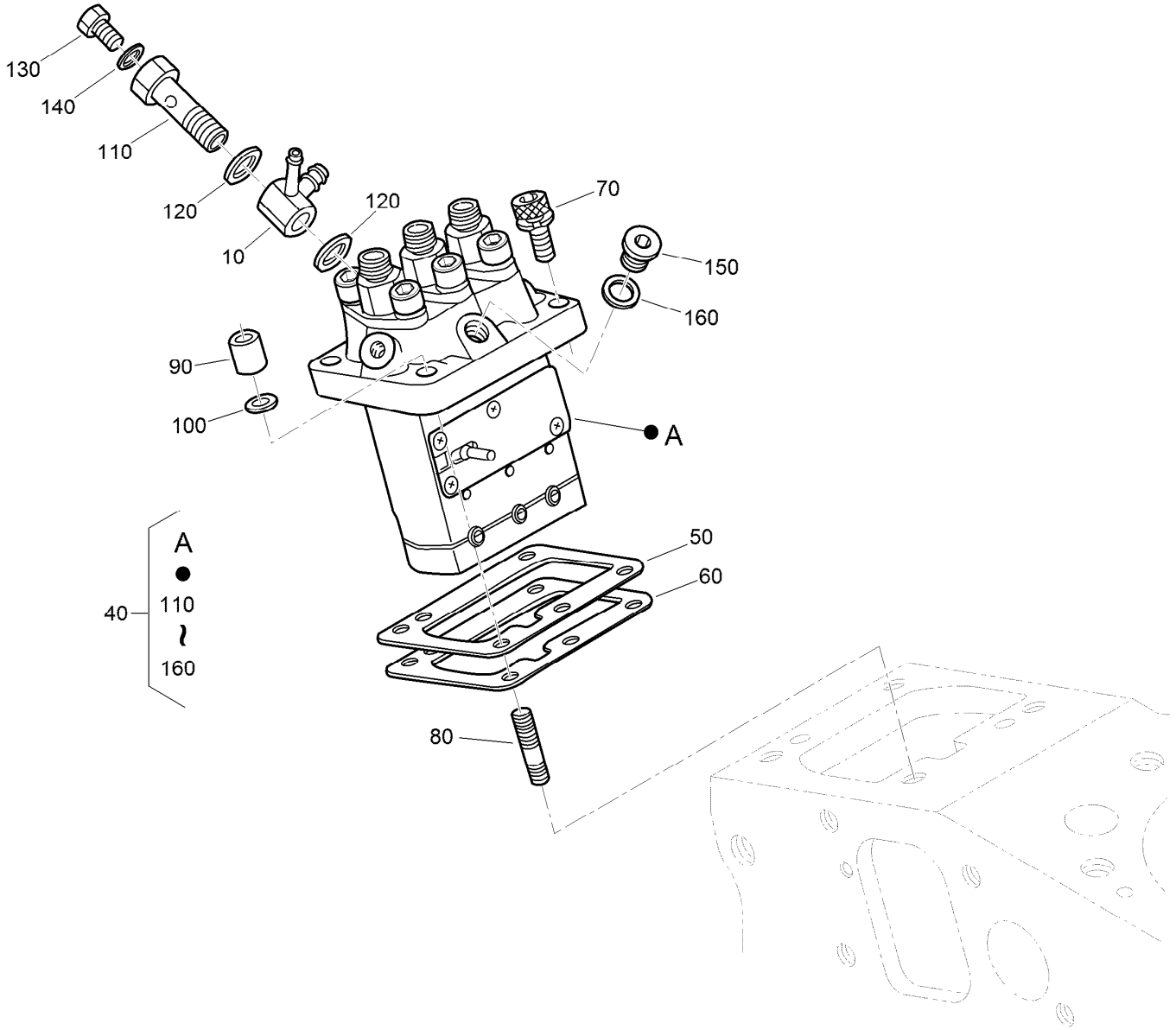


# Injection Pump Assembly

| Ref. | Part Number | Qty. | Description |
|---|---|---|---|
| 10 | 110-3764 | 1 | Joint |
| 40 | 110-3765 | 1 | Injection Pump ASM |
| 50 | 115-3045 | 1 | Shim-Injection (0.175Mm) |
| 50 | 98-9456 | 1 | Shim-Injection (0.20Mm) |
| 50 | 98-9457 | 1 | Shim-Injection (0.25Mm) |
| 60 | 98-9458 | 1 | Shim-Injection (0.30Mm) |
| 60 | 115-3046 | 1 | Shim-Injection (0.35Mm) |
| 70 | 117-7564 | 2 | Bolt-Hex Soc HD |
| 80 | 98-9438 | 2 | Stud |

| Ref. | Part Number | Qty. | Description |
|---|---|---|---|
| 90 | 98-9440 | 2 | Nut-Cap |
| 100 | 98-7699 | 2 | Washer-Spring |
| 110 | 100-1896 | 1 | Screw-Hollow |
| 120 | 98-9445 | 2 | Gasket |
| 130 | 98-9430 | 1 | Screw |
| 140 | 98-9446 | 1 | Gasket |
| 150 | 98-9466 | 1 | Plug |
| 160 | 98-9451 | 1 | Gasket |

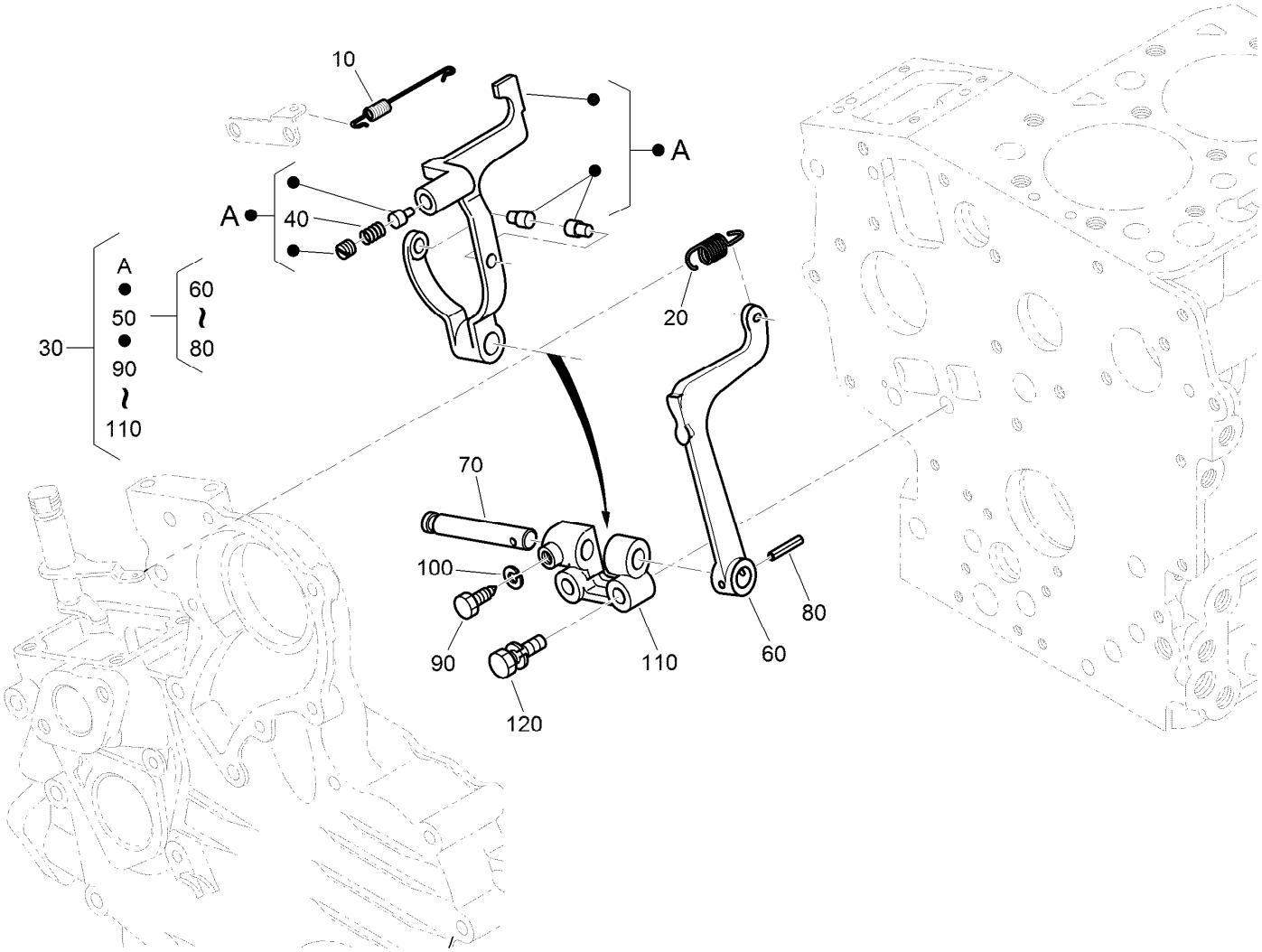


# Governor Assembly

| Ref. | Part Number | Qty. | Description |
|---|---|---|---|
| 10 | 110-3766 | 1 | Spring-Start |
| 20 | 110-3767 | 1 | Spring-Governor |
| 30 | 130-1368 | 1 | Fork Lever ASM |
| 40 | 117-0313 | 1 | Spring |
| 50 | 100-1905 | 1 | Fork Lever ASM |
| 60 | 100-1907 | 1 | Lever-Fork |
| 70 | 100-1908 | 1 | Shaft-Lever, Fork |
| 80 | 100-1751 | 1 | Pin-Spring |
| 90 | 100-1845 | 1 | Bolt |
| 100 | 100-2204 | 1 | Washer-Spring |
| 110 | 100-1909 | 1 | Holder-Lever, Fork |
| 120 | 100-1763 | 2 | Bolt |

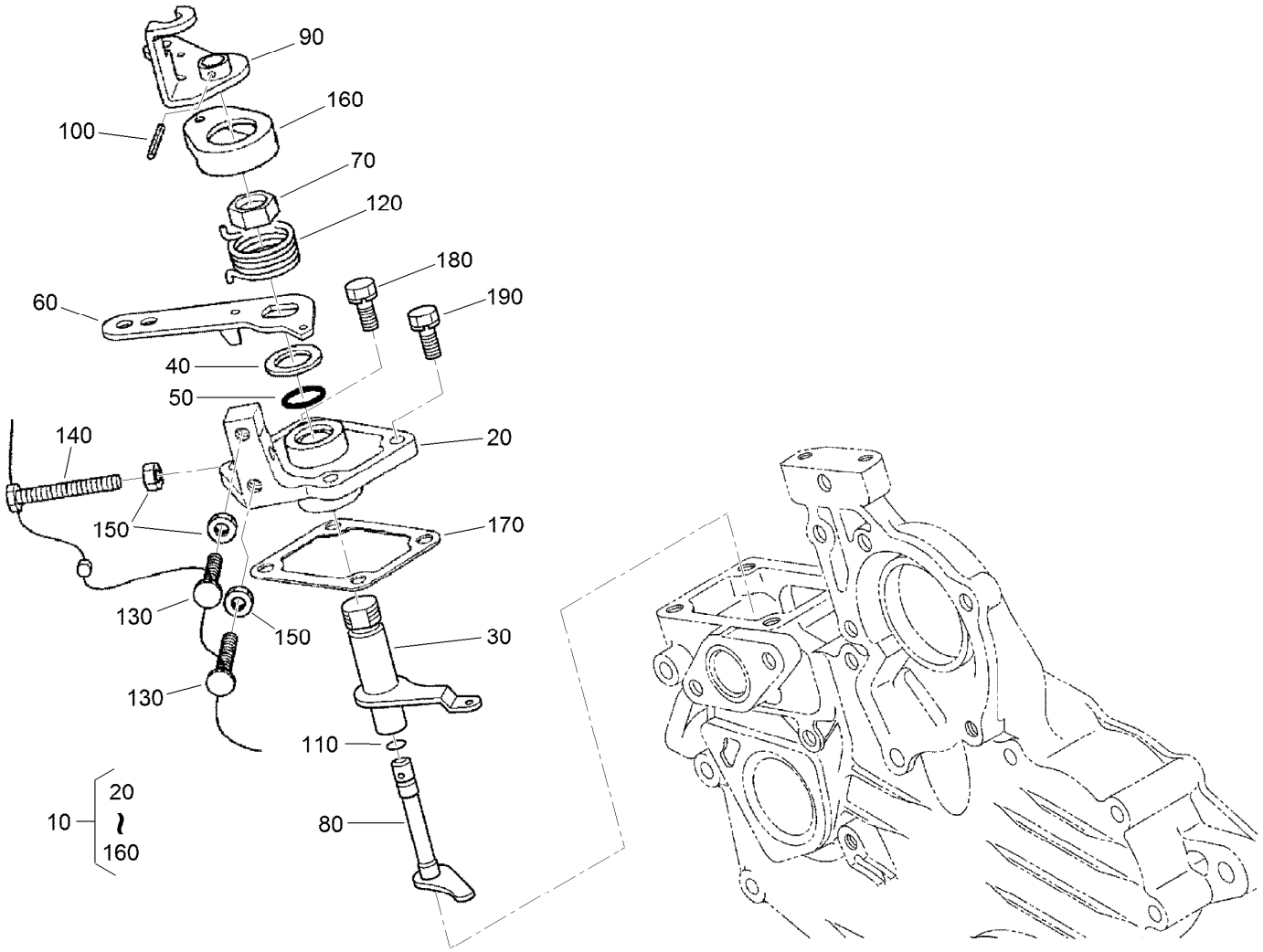


# Speed Control Plate Assembly

| Ref. | Part Number | Qty. | Description |
|---|---|---|---|
| 10 | 110-3769 | 1 | Speed Control Plate ASM |
| 20 | 110-3770 | 1 | Plate-Control, Speed |
| 30 | 110-3771 | 1 | Lever-Governor |
| 40 | 110-3772 | 1 | Collar |
| 50 | 100-2208 | 1 | O-Ring |
| 60 | 110-3773 | 1 | Lever-Control, Speed |
| 70 | 110-3774 | 1 | Nut-Control, Speed |
| 80 | 110-3775 | 1 | Shaft-Lever |
| 90 | 110-3776 | 1 | Lever-Stop, Engine |
| 100 | 110-3777 | 1 | Pin-Spring |

| Ref. | Part Number | Qty. | Description |
|---|---|---|---|
| 110 | 100-2207 | 1 | O-Ring |
| 120 | 110-3778 | 1 | Spring-Return |
| 130 | 120-3133 | 2 | Screw-Stopper |
| 140 | 120-3134 | 1 | Bolt |
| 150 | 98-7572 | 3 | Nut |
| 160 | 110-3779 | 1 | Cap |
| 170 | 100-1962 | 1 | Gasket-Plate, Control |
| 180 | 127-0403 | 2 | Bolt-Flange |
| 190 | 112-2507 | 2 | Bolt |

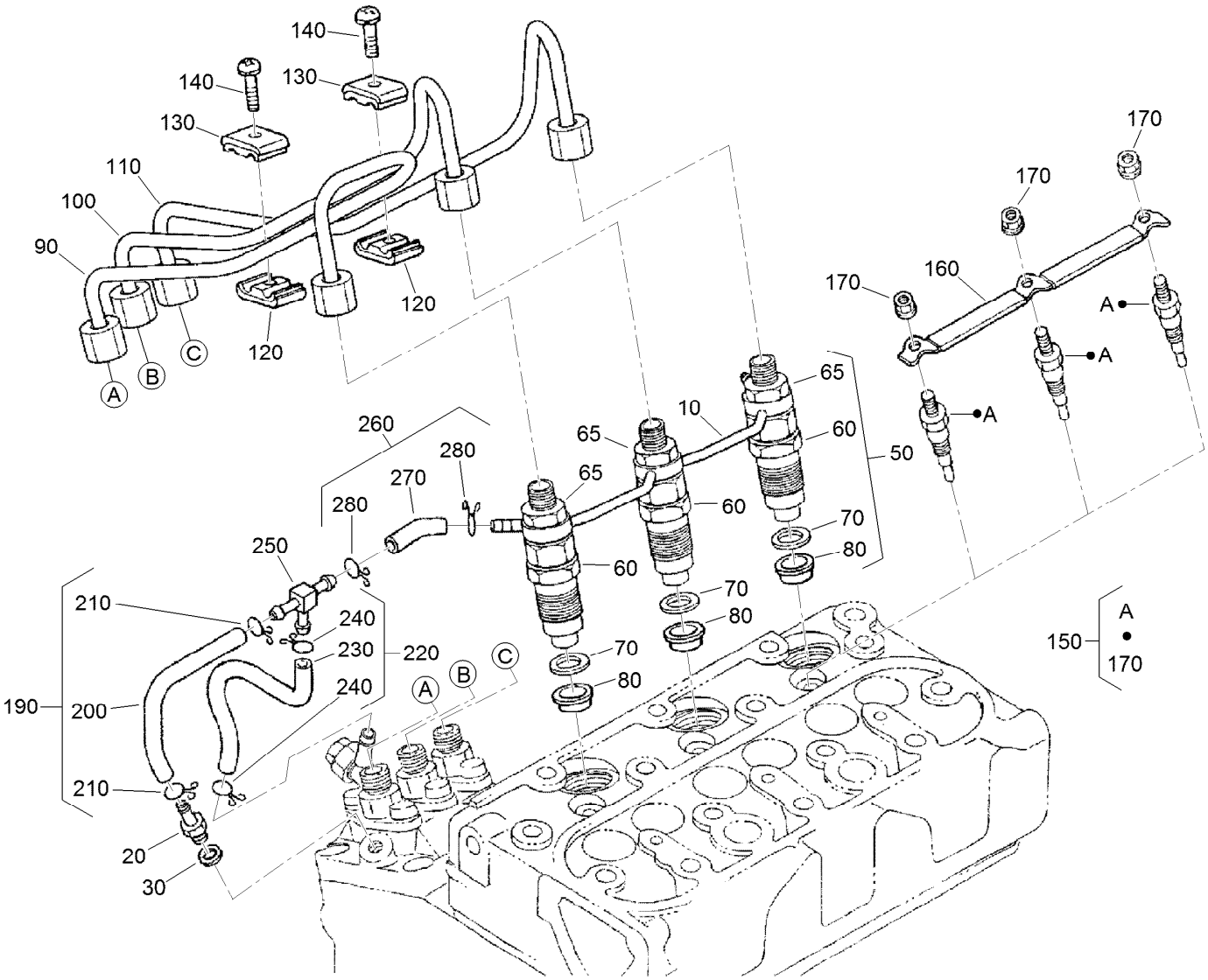


# Nozzle Holder and Glow Plug Assembly

| Ref. | Part Number | Qty. | Description |
|---|---|---|---|
| 10 | 110-3780 | 1 | Over Flow Pipe ASM |
| 20 | 98-9431 | 1 | Screw-Bleeder, Air |
| 30 | 98-7654 | 1 | Gasket |
| 50 | 130-1305 | 3 | Nozzle Holder Kit |
| 60 | 130-1303 | 3 | Nozzle Holder ASM |
| 65 | 121-2411 | 3 | Nut |
| 70 | 98-7676 | 3 | Gasket |
| 80 | 98-7677 | 3 | Seal-Heat |
| 90 | 130-1522 | 1 | Pipe-Injection |
| 100 | 130-1523 | 1 | Pipe-Injection |
| 110 | 130-1541 | 1 | Pipe-Injection |
| 120 | 98-7682 | 2 | Clamp-Pipe |
| 130 | 98-7683 | 2 | Clamp-Pipe |
| 140 | 98-7684 | 2 | Screw (W/Washer) |

| Ref. | Part Number | Qty. | Description |
|---|---|---|---|
| 150 | 130-1411 | 3 | Plug-Glow |
| 160 | 110-3784 | 1 | Cord-Plug, Glow |
| 170 | 99-8377 | 3 | Nut-Flange |
| 190 | 110-3785 | 1 | Fuel Tube ASM |
| 200 | 110-3786 | 1 | Tube-Fuel |
| 210 | 98-7671 | 2 | Clip-Pipe |
| 220 | 110-3787 | 1 | Fuel Tube ASM |
| 230 | 110-3788 | 1 | Tube-Fuel |
| 240 | 98-7671 | 2 | Clip-Pipe |
| 250 | 112-8338 | 1 | Pipe-Joint, T |
| 260 | 110-3790 | 1 | Fuel Tube ASM |
| 270 | 110-3791 | 1 | Tube-Fuel |
| 280 | 98-7671 | 2 | Clip-Pipe |

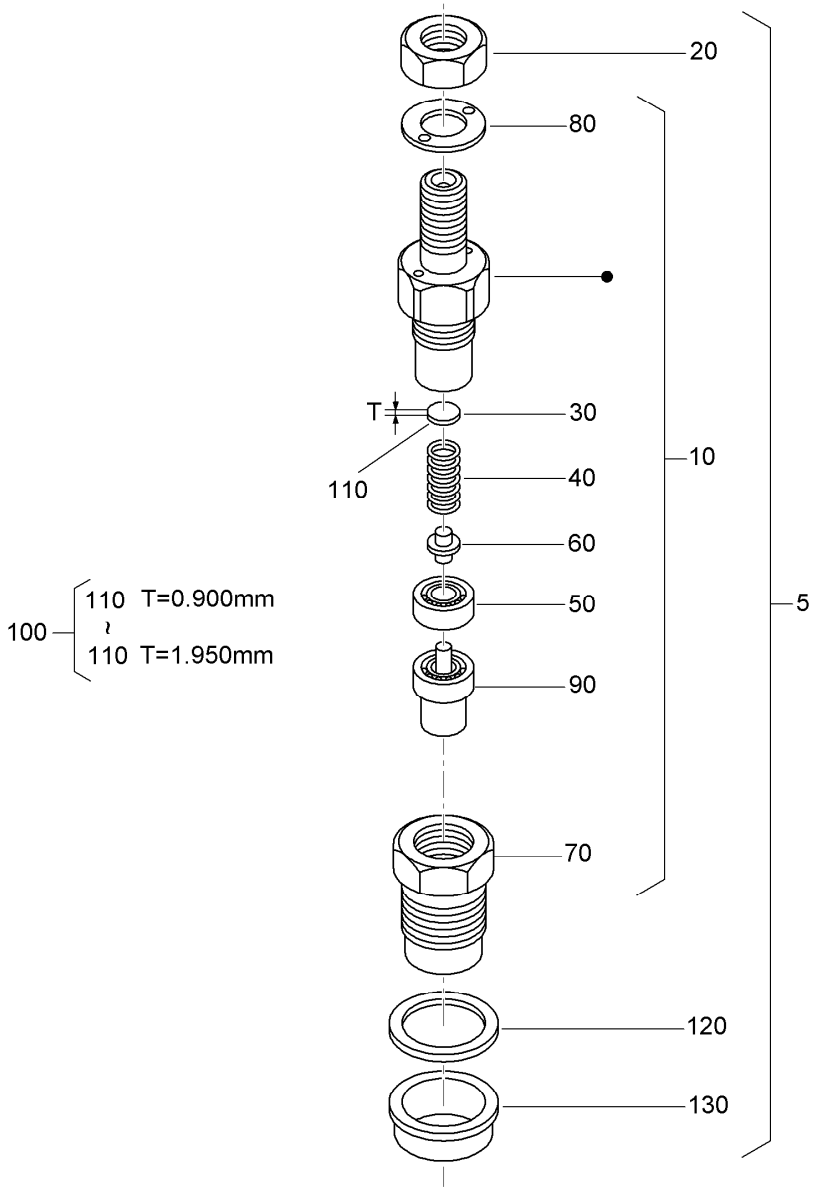


# Nozzle Holder Assembly

| Ref. | Part Number | Qty. | Description |
|---|---|---|---|
| 5 | 130-1305 | 3 | Nozzle Holder Kit |
| 10 | 130-1303 | 3 | Nozzle Holder ASM |
| 20 | 121-2411 | 3 | Nut |
| 30 | 99-8302 | 3 | Washer-Adjusting |
| 40 | 99-8303 | 3 | Spring-Nozzle |
| 50 | 99-8304 | 3 | Spacer-Distance |
| 60 | 99-8305 | 3 | Rod-Push |
| 70 | 130-1304 | 3 | Nut-Nozzle |
| 80 | 99-8307 | 3 | Washer-Plain |
| 90 | 130-1497 | 3 | Nozzle-Piece |
| 100 | 98-9448 | 3 | Adjusting Washer ASM |
| 110 | 98-7642 | 3 | Washer-Adjusting (0.900Mm) |
| 110 | 98-7841 | 3 | Washer-Adjusting (0.925Mm) |
| 110 | 98-7842 | 3 | Washer-Adjusting (0.950Mm) |
| 110 | 98-7843 | 3 | Washer-Adjusting (0.975Mm) |
| 110 | 98-7844 | 3 | Washer-Adjusting (1.000Mm) |
| 110 | 98-7845 | 3 | Washer-Adjusting (1.025Mm) |
| 110 | 98-7846 | 3 | Washer-Adjusting (1.050Mm) |
| 110 | 98-7847 | 3 | Washer-Adjusting (1.075Mm) |
| 110 | 98-7848 | 3 | Washer-Adjusting (1.100Mm) |
| 110 | 98-7849 | 3 | Washer-Adjusting (1.125Mm) |
| 110 | 98-7850 | 3 | Washer-Adjusting (1.150Mm) |
| 110 | 98-7851 | 3 | Washer-Adjusting (1.175Mm) |
| 110 | 98-7852 | 3 | Washer-Adjusting (1.200Mm) |
| 110 | 98-7853 | 3 | Washer-Adjusting (1.225Mm) |
| 110 | 98-7854 | 3 | Washer-Adjusting (1.250Mm) |

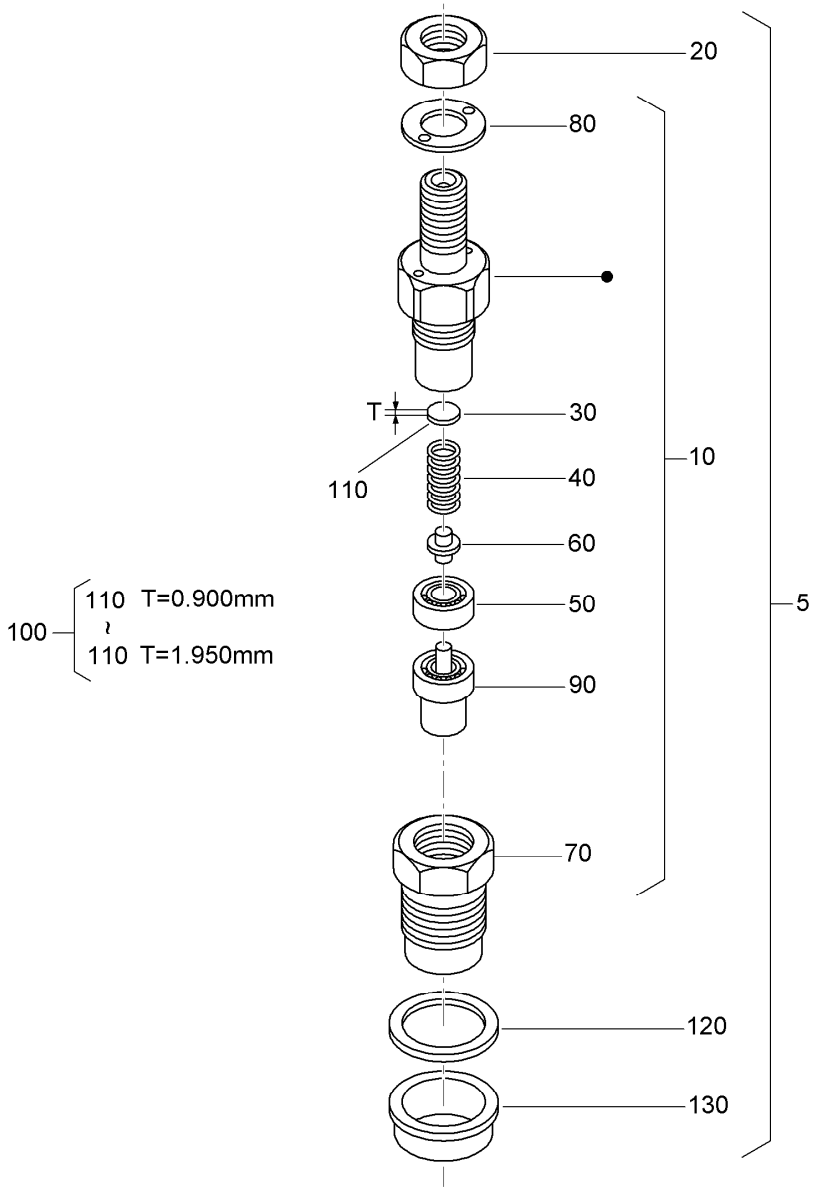


# Nozzle Holder Assembly (continued)

| Ref. | Part Number | Qty. | Description |
|---|---|---|---|
| 110 | 98-7855 | 3 | Washer-Adjusting (1.275Mm) |
| 110 | 98-7856 | 3 | Washer-Adjusting 1.300Mm) |
| 110 | 98-7857 | 3 | Washer-Adjusting (1.325Mm) |
| 110 | 98-7858 | 3 | Washer-Adjusting (1.350Mm) |
| 110 | 98-7859 | 3 | Washer-Adjusting (1.375Mm) |
| 110 | 98-7860 | 3 | Washer-Adjusting (1.400Mm) |
| 110 | 98-7861 | 3 | Washer-Adjusting (1.425Mm) |
| 110 | 98-7862 | 3 | Washer-Adjusting (1.450Mm) |
| 110 | 98-7863 | 3 | Washer-Adjusting (1.475Mm) |
| 110 | 98-7864 | 3 | Washer-Adjusting (1.500Mm) |

| Ref. | Part Number | Qty. | Description |
|---|---|---|---|
| 110 | 98-7865 | 3 | Washer-Adjusting (1.525Mm) |
| 110 | 98-7866 | 3 | Washer-Adjusting (1.550Mm) |
| 110 | 98-7867 | 3 | Washer-Adjusting (1.575Mm) |
| 110 | 98-7868 | 3 | Washer-Adjusting (1.600Mm) |
| 110 | 98-7869 | 3 | Washer-Adjusting (1.625Mm) |
| 110 | 98-7870 | 3 | Washer-Adjusting (1.650Mm) |
| 110 | 98-7871 | 3 | Washer-Adjusting (1.675Mm) |
| 110 | 98-7872 | 3 | Washer-Adjusting (1.700Mm) |
| 110 | 98-7873 | 3 | Washer-Adjusting (1.725Mm) |
| 110 | 98-7874 | 3 | Washer-Adjusting (1.750Mm) |

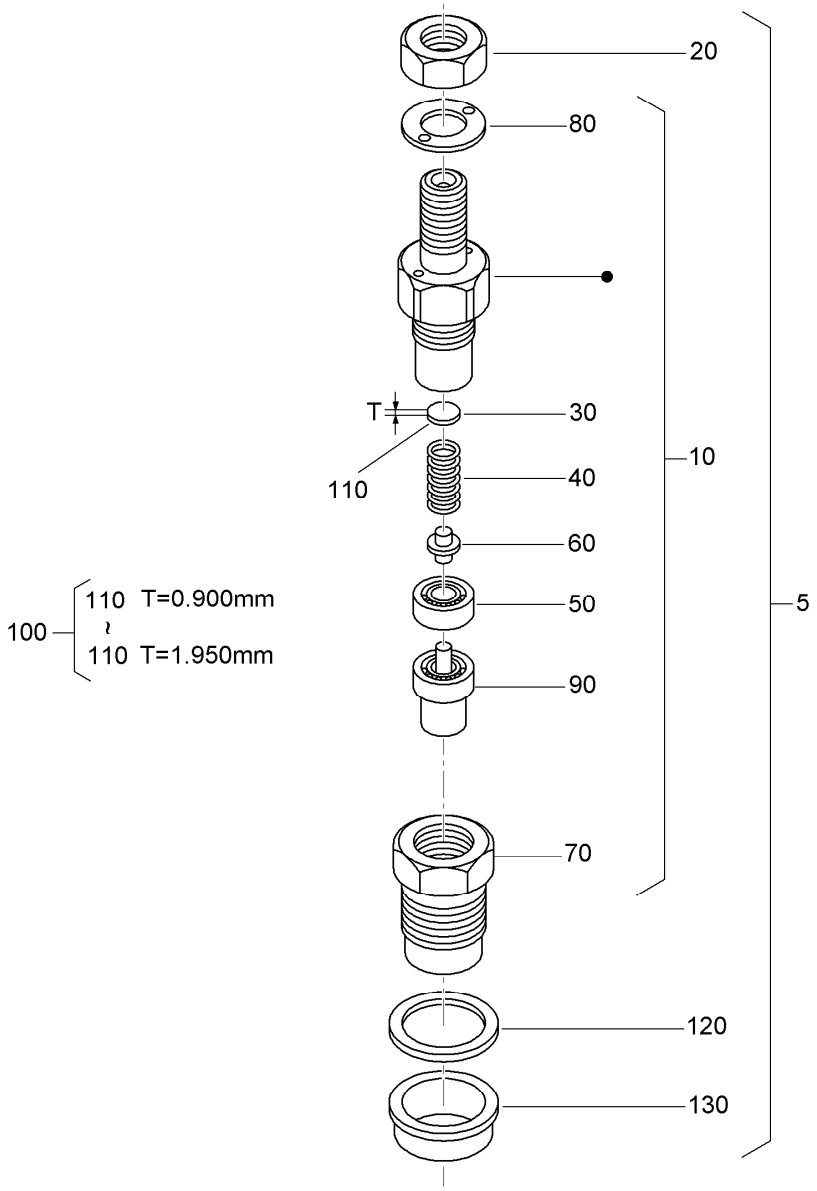


# Nozzle Holder Assembly (continued)

| Ref. | Part Number | Qty. | Description |
|---|---|---|---|
| 110 | 98-7875 | 3 | Washer-Adjusting (1.775Mm) |
| 110 | 98-7876 | 3 | Washer-Adjusting (1.800Mm) |
| 110 | 98-7877 | 3 | Washer-Adjusting (1.825Mm) |
| 110 | 98-7878 | 3 | Washer-Adjusting (1.850Mm) |
| 110 | 98-7879 | 3 | Washer-Adjusting (1.875Mm) |

| Ref. | Part Number | Qty. | Description |
|---|---|---|---|
| 110 | 98-7880 | 3 | Washer-Adjusting (1.900Mm) |
| 110 | 98-7881 | 3 | Washer-Adjusting (1.925Mm) |
| 110 | 98-7882 | 3 | Washer-Adjusting (1.950Mm) |
| 120 | 98-7676 | 3 | Gasket |
| 130 | 98-7677 | 3 | Seal-Heat |

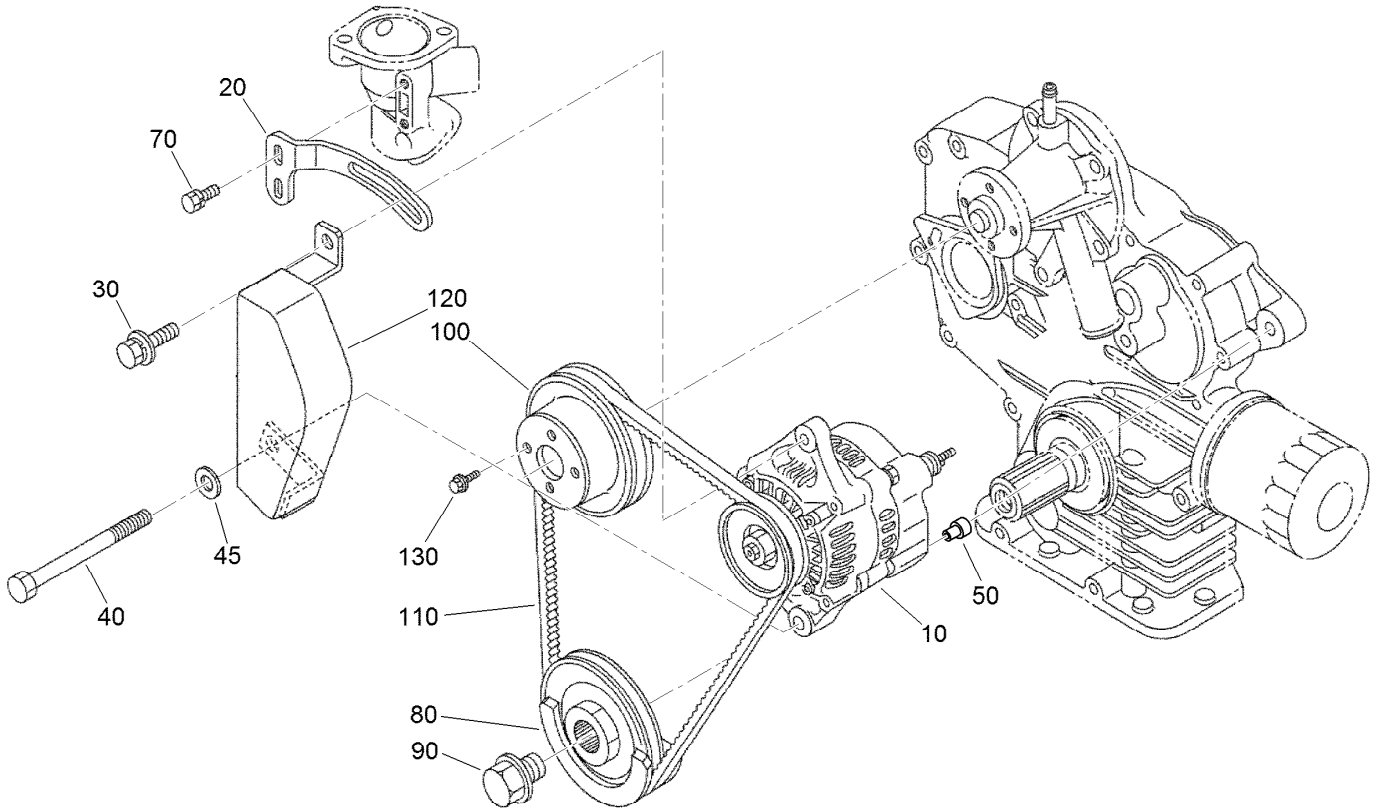


# Alternator and Pulley Assembly

| *Ref.* | *Part Number* | *Qty.* | *Description* |
|---|---|---|---|
| 10 | 117-5541 | 1 | 60 Amp Alternator ASM |
| 20 | 117-0314 | 1 | Stay-Alternator |
| 30 | 121-3800 | 1 | Bolt-Sems |
| 40 | 110-3793 | 1 | Bolt |
| 45 | 120-5832 | 1 | Washer-Plain |
| 50 | 110-3794 | 1 | Collar |
| 70 | 98-7692 | 2 | Bolt |
| 80 | 125-9055 | 1 | Pulley-Drive, Fan |
| 90 | 100-1978 | 1 | Bolt |
| 100 | 100-1921 | 1 | Pulley-Fan |
| 110 | 110-3796 | 1 | Belt-V |
| 120 | 117-0315 | 1 | Cover-Alternator |
| 130 | 99-8363 | 4 | Bolt-Flange |

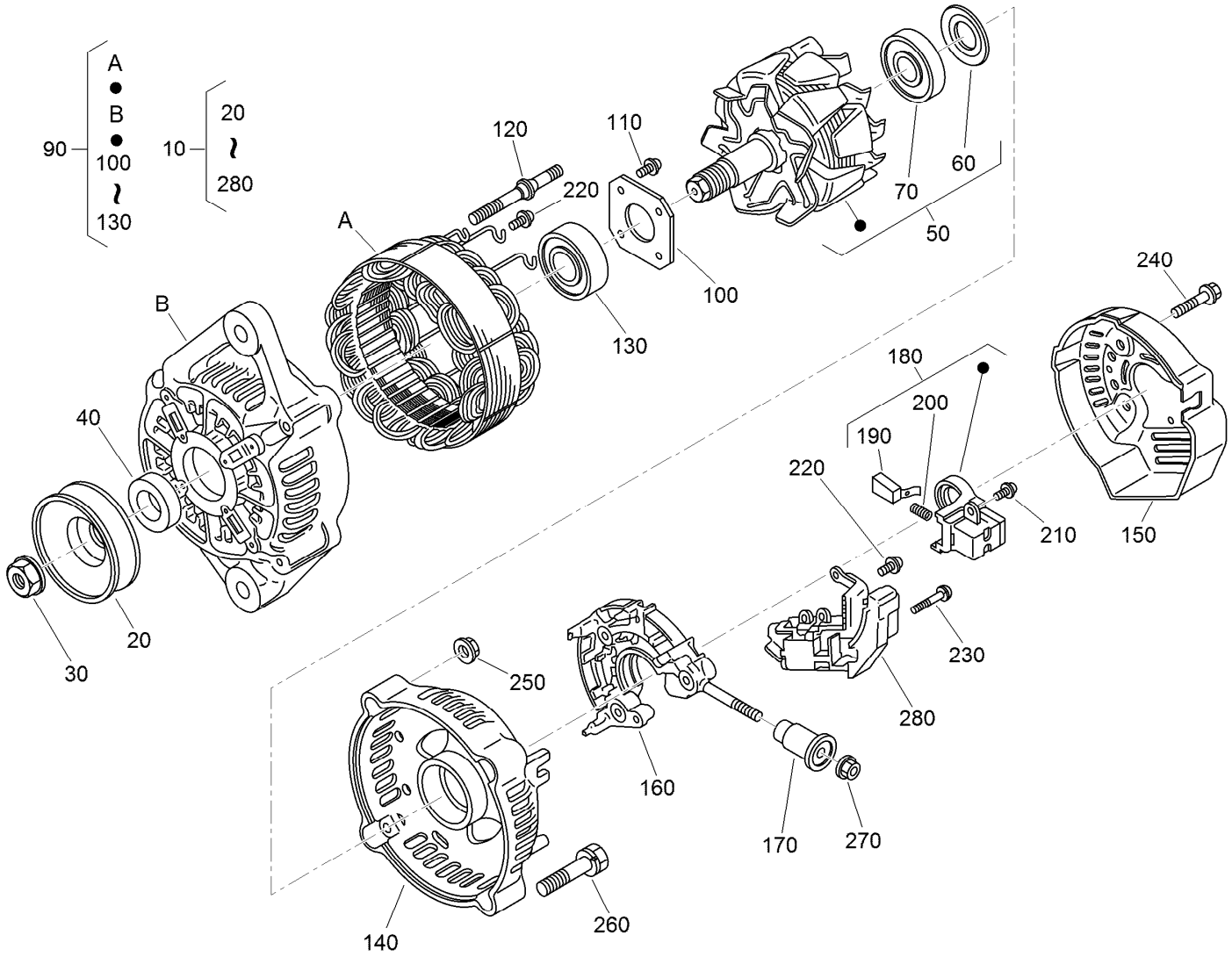


# Alternator Components Assembly

| Ref. | Part Number | Qty. | Description |
|---|---|---|---|
| 10 | 117-5541 | 1 | 60 Amp Alternator ASM |
| 20 | 98-9453 | 1 | Pulley-Dynamo |
| 30 | 98-7708 | 1 | Nut |
| 40 | 98-7709 | 1 | Collar |
| 50 | 117-0317 | 1 | Rotor ASM |
| 60 | 98-7711 | 1 | Cover-Bearing |
| 70 | 107-0138 | 1 | Bearing-Ball |
| 90 | 117-0316 | 1 | Drive End Frame ASM |
| 100 | 98-7715 | 1 | Plate-Retainer |
| 110 | 98-7716 | 4 | Screw-Head, Round |
| 120 | 98-7717 | 2 | Bolt-Through |
| 130 | 107-0137 | 1 | Bearing-Ball |
| 140 | 117-0318 | 1 | *obs* Frame-End |
| 150 | 117-0320 | 1 | Cover-End |

| Ref. | Part Number | Qty. | Description |
|---|---|---|---|
| 160 | 117-0322 | 1 | Holder |
| 170 | 117-0321 | 1 | Insulation-Brush |
| 180 | 107-0141 | 1 | Brush Holder ASM |
| 190 | 98-7724 | 2 | Brush |
| 200 | 98-7725 | 2 | Spring-Brush |
| 210 | 98-7727 | 6 | Screw-Head, Round |
| 220 | 98-7728 | 1 | Screw-Head, Round |
| 230 | 98-7726 | 2 | Screw-Head, Round |
| 240 | 98-7729 | 3 | Bolt |
| 250 | 98-7730 | 2 | Nut |
| 260 | 98-7731 | 2 | Bolt |
| 270 | 98-7732 | 1 | Nut |
| 280 | 117-0319 | 1 | Regulator ASM |

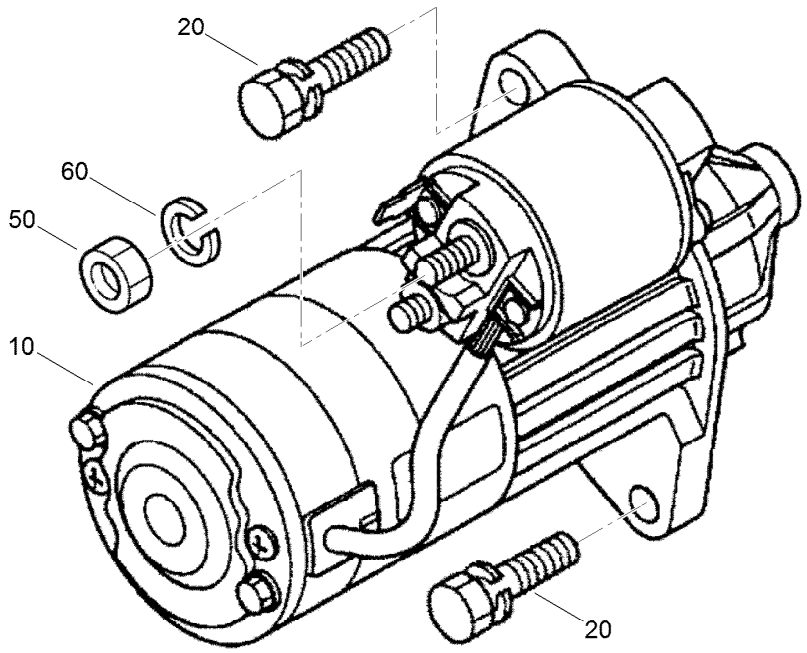


# Starter Assembly

| *Ref.* | *Part Number* | *Qty.* | *Description* |
|---|---|---|---|
| 10 | 130-1294 | 1 | Starter ASM |
| 20 | 98-7697 | 2 | Bolt |
| 50 | 98-7534 | 1 | Nut |
| 60 | 105-2893 | 1 | Washer-Spring |

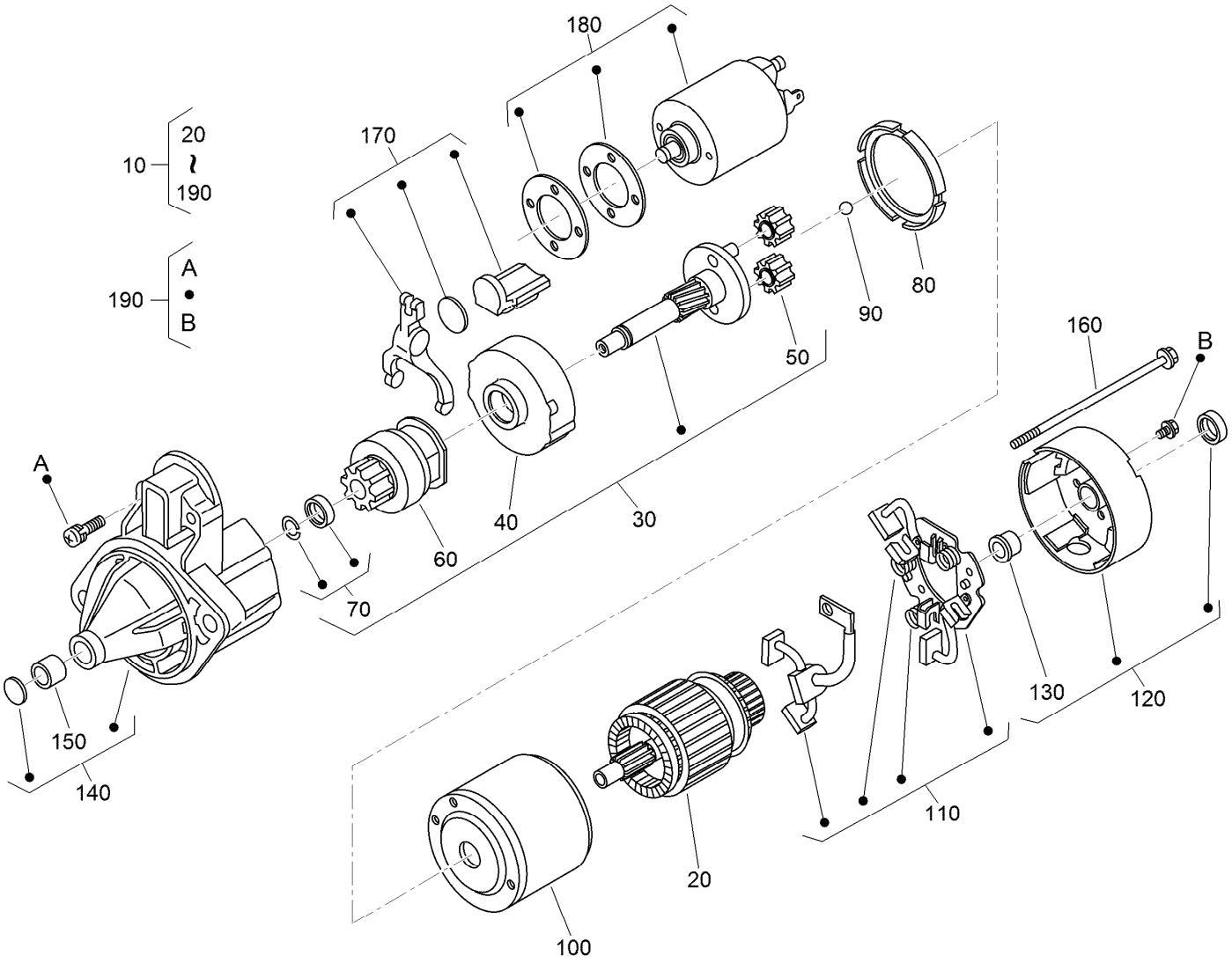


# Starter Component Assembly

| Ref. | Part Number | Qty. | Description |
|---|---|---|---|
| 10 | 130-1294 | 1 | Starter ASM |
| 20 | 110-3801 | 1 | Armature |
| 30 | 110-3802 | 1 | Shaft ASM |
| 40 | 120-3142 | 1 | Gear-Internal |
| 50 | 110-3804 | 3 | Gear-Planetary |
| 60 | 110-3805 | 1 | Clutch-Running, Over |
| 70 | 110-3806 | 1 | Stopper |
| 80 | 120-3143 | 1 | Gasket |
| 90 | 110-3808 | 1 | Ball |
| 100 | 130-1295 | 1 | Yoke |

| Ref. | Part Number | Qty. | Description |
|---|---|---|---|
| 110 | 110-3810 | 1 | Brush Holder ASM |
| 120 | 110-3811 | 1 | Rear Bracket ASM |
| 130 | 110-3812 | 1 | Bushing |
| 140 | 110-3813 | 1 | Front Bracket ASM |
| 150 | 110-3814 | 1 | Bushing |
| 160 | 110-3815 | 2 | Bolt |
| 170 | 110-3816 | 1 | Fork Lever ASM |
| 180 | 125-9099 | 1 | Switch-Magnetic |
| 190 | 110-3818 | 2 | Screws (Set Of 4) |

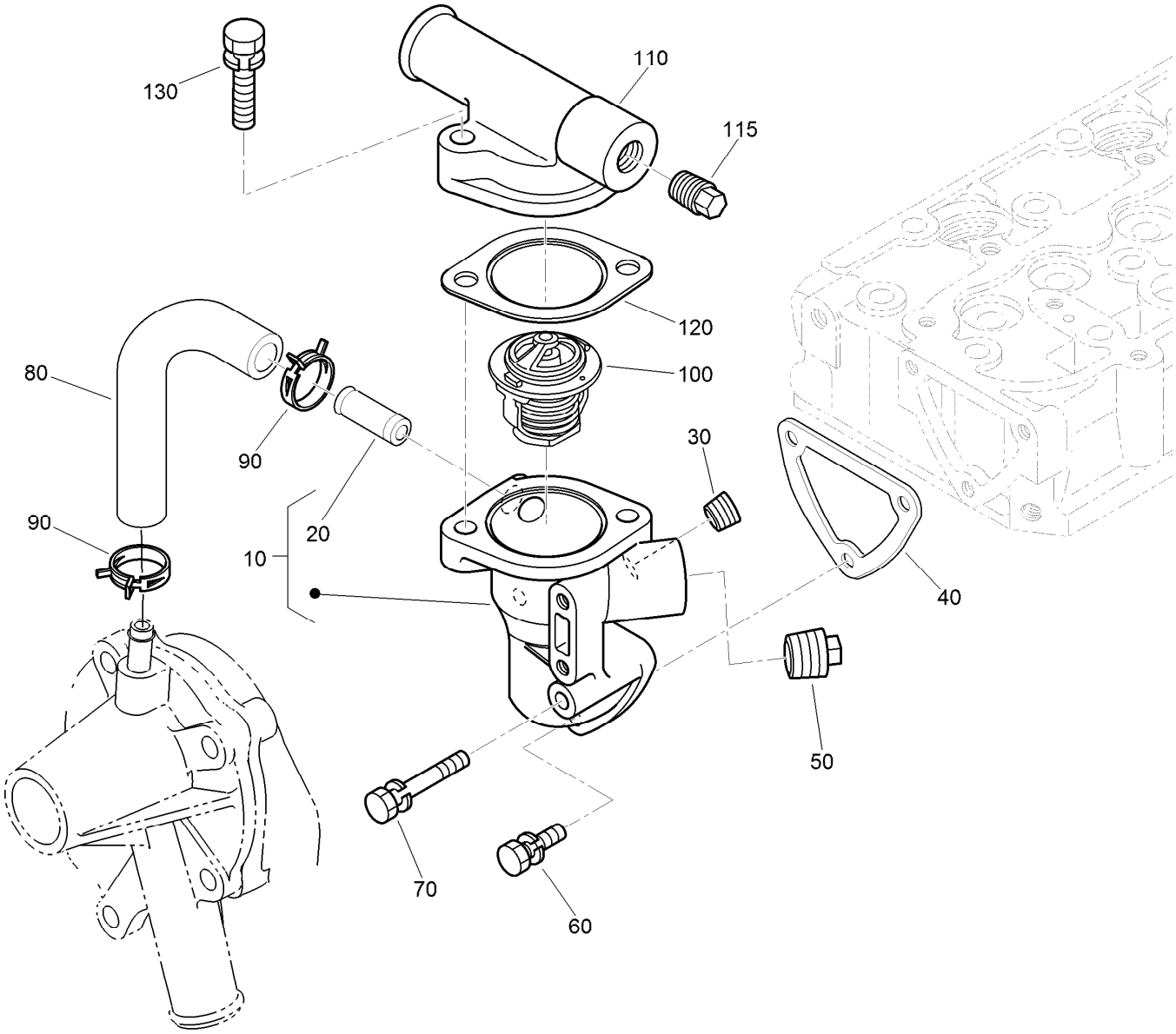


# Water Flange and Thermostat Assembly

| Ref. | Part Number | Qty. | Description |
|---|---|---|---|
| 10 | 110-3819 | 1 | Water Flange ASM |
| 20 | 98-9580 | 1 | Pipe-Return, Water |
| 30 | 98-9444 | 1 | Plug |
| 40 | 110-3820 | 1 | Gasket-Flange, Water |
| 50 | 110-3821 | 1 | Plug |
| 60 | 98-7692 | 2 | Bolt |
| 70 | 125-9063 | 1 | Bolt-Sems |
| 80 | 110-3822 | 1 | Pipe-Return, Water |
| 90 | 125-9078 | 2 | Clamp-Hose |
| 100 | 98-7778 | 1 | Thermostat ASM |
| 110 | 120-7575 | 1 | Cover-Thermostat |
| 115 | 125-9079 | 1 | Plug |
| 120 | 105-3748 | 1 | Gasket-Thermostat |
| 130 | 98-7777 | 2 | Bolt |

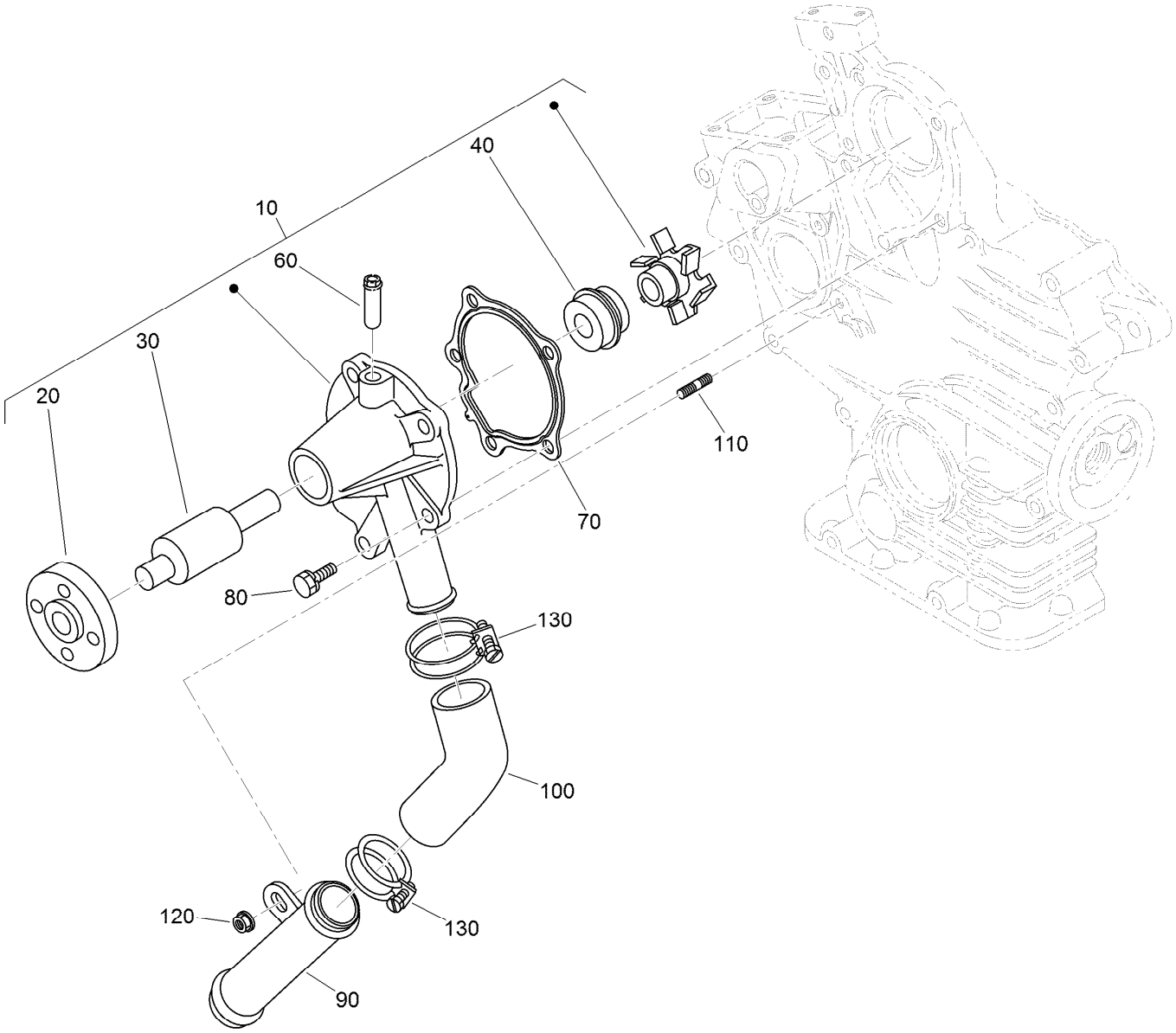


# Water Pump and Water Pipe Assembly

| Ref. | Part Number | Qty. | Description |
|---|---|---|---|
| 10 | 110-3824 | 1 | Water Pump ASM |
| 20 | 125-9081 | 1 | Flange-Pump, Water |
| 30 | 100-1934 | 1 | Bearing-Ball |
| 40 | 99-3518 | 1 | Water Pump Seal ASM |
| 60 | 100-1932 | 1 | Pipe-Return, Water |
| 70 | 117-0330 | 1 | Gasket-Pump, Water |
| 80 | 100-1750 | 4 | Bolt |
| 90 | 100-1918 | 1 | Pipe-Water |
| 100 | 110-3827 | 1 | Pipe-Water |
| 110 | 100-1924 | 1 | Stud |
| 120 | 100-2203 | 1 | Nut-Flange |
| 130 | 110-3828 | 2 | Band-Pipe |

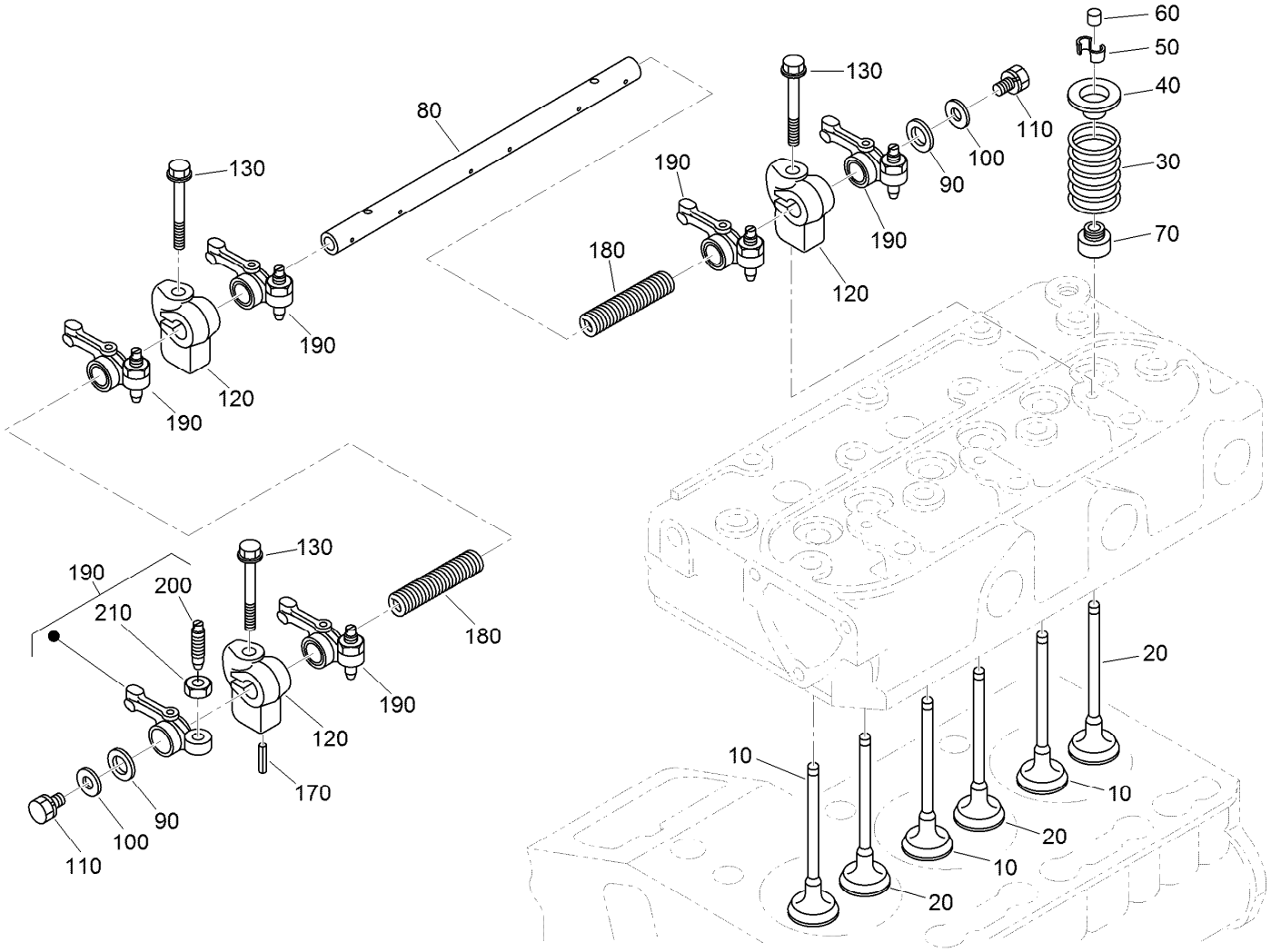


# Valve and Rocker Arm Assembly

| Ref. | Part Number | Qty. | Description |
|---|---|---|---|
| 10 | 112-2514 | 3 | Valve-Inlet |
| 20 | 112-2515 | 3 | Valve-Exhaust |
| 30 | 100-1823 | 6 | Spring-Valve |
| 40 | 100-1825 | 6 | Retainer-Spring, Valve |
| 50 | 120-3136 | 6 | Collet-Spring, Valve |
| 60 | 100-2155 | 6 | Cap-Valve |
| 70 | 100-1797 | 6 | Seal-Stem, Valve |
| 80 | 112-8341 | 1 | Shaft-Arm, Rocker |
| 90 | 100-2044 | 2 | Washer |

| Ref. | Part Number | Qty. | Description |
|---|---|---|---|
| 100 | 110-3832 | 2 | Washer-Plain |
| 110 | 100-1762 | 2 | Bolt |
| 120 | 110-3833 | 3 | Bracket-Arm, Rocker |
| 130 | 110-3834 | 3 | Bolt-Flange |
| 170 | 98-7602 | 1 | Pin-Spring |
| 180 | 112-8342 | 2 | Spring |
| 190 | 100-1884 | 6 | Rocker Arm ASM |
| 200 | 100-1885 | 6 | Screw-Adjusting |
| 210 | 100-1827 | 6 | Nut |

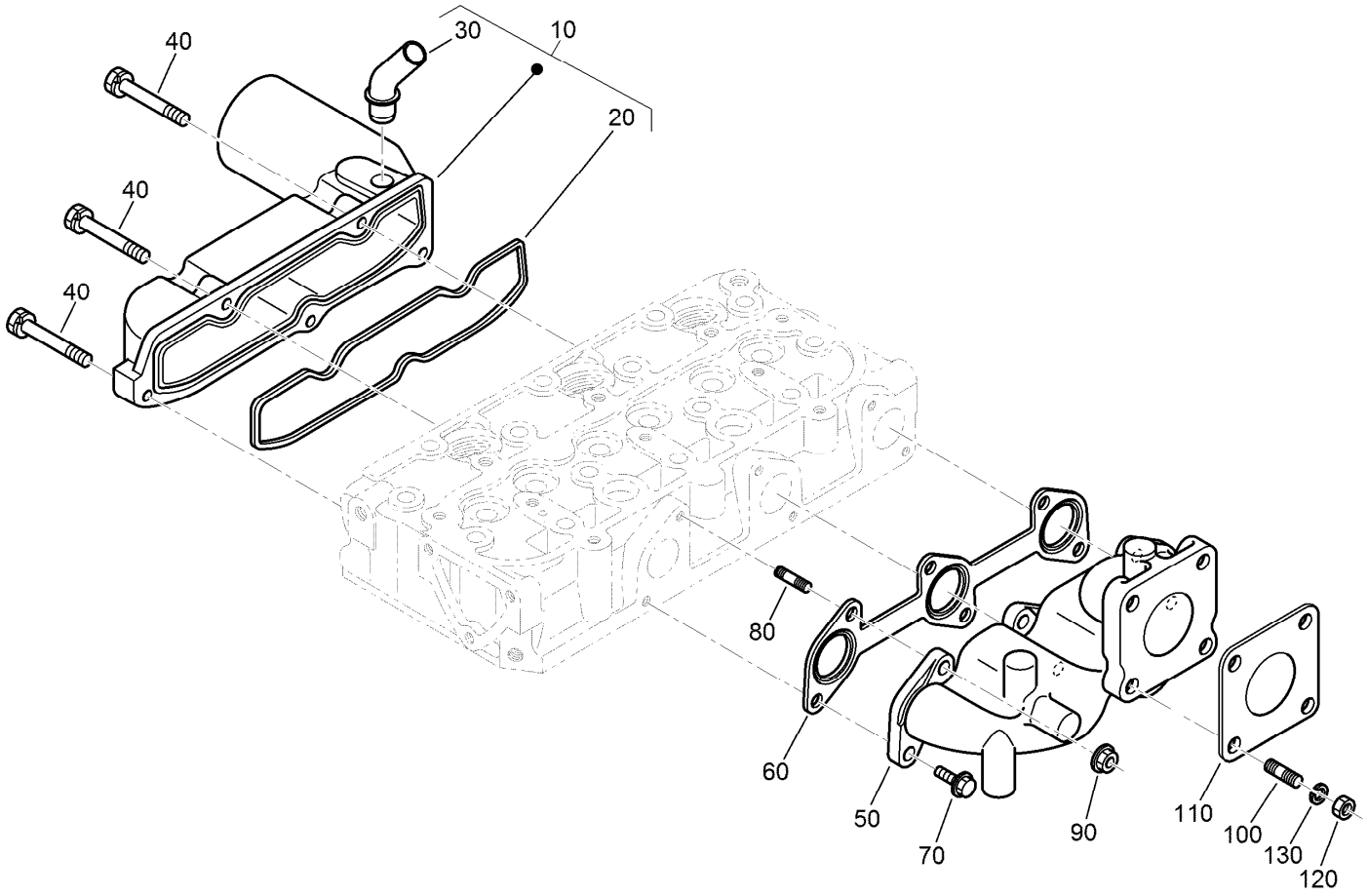


# Inlet and Exhaust Manifold Assembly

| *Ref.* | *Part Number* | *Qty.* | *Description* |
|---|---|---|---|
| 10 | 120-3141 | 1 | Intake Manifold ASM |
| 20 | 110-3838 | 1 | Gasket-Manifold, Intake |
| 30 | 121-2417 | 1 | Pipe-Breather |
| 40 | 98-9352 | 5 | Bolt |
| 50 | 110-3839 | 1 | Manifold-Exhaust |
| 60 | 110-3840 | 1 | Gasket-Manifold, Exhaust |
| 70 | 130-1514 | 3 | Bolt-Ubs |
| 80 | 130-1156 | 3 | Bolt-Stud |
| 90 | 100-1778 | 3 | Nut |
| 100 | 98-7769 | 4 | Stud |
| 110 | 99-8343 | 1 | Gasket-Muffler |
| 120 | 98-7534 | 4 | Nut |
| 130 | 105-2893 | 4 | Washer-Spring |

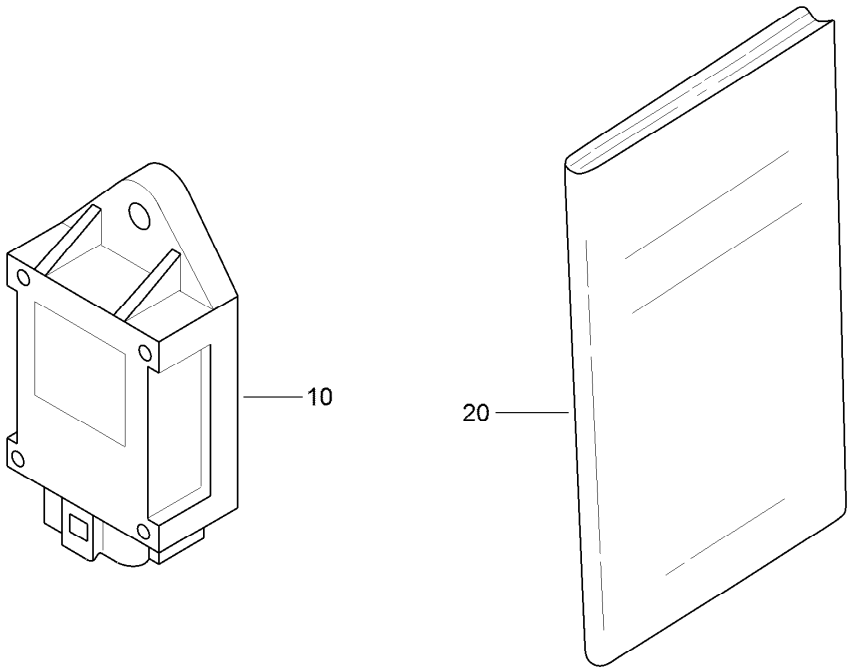


# Miscellaneous Engine Parts

| *Ref.* | *Part Number* | *Qty.* | *Description* |
|---|---|---|---|
| 10 | 98-7611 | 1 | Controller-Glow |
| 20 | 130-1513 | 1 | Manual-Operator |

# Attachments and Accessories

## For 07385 Workman HDX-D Utility Vehicle with Bed

| Product Name | Model/Part |
|---|---|
| Pro Sweep Turf Sweeper | 07068 |
| Full Area Flatbed | 07301 |
| Full Area Flatbed Side Kit | 07302 |
| Fold Down Side Kit | 07303 |
| High-Flow Hydraulic Kit | 07316 |
| 2/3 Area Flatbed | 07321 |
| 2/3 Area Flatbed Side Kit | 07322 |
| Bed Liner | 07331 |
| 1/3 Area Flatbed | 07341 |
| 1/3 Area Platform Lift | 07347 |
| Heater Kit | 07349 |
| Canopy | 07372 |
| Windshield | 07373 |
| 4 Post Roll-Over Protection System | 07378 |
| Cab Kit | 07392 |
| Door Kit with Sliding Window | 07393 |
| Rear PTO Kit | 07419 |
| Hand Throttle Kit | 07420 |
| Aggressive Tire Kit | 07422 |
| Synthetic Turf Conditioner, Tow-Behind Accessory | 08791 |
| ProCore Processor | 09749 |
| Backup Alarm Kit | 107-8037 |
| Premium ATF (Drum) | 108-1185 |
| Premium ATF (Pail) | 108-1186 |
| Premium All Purpose Grease (Tube) | 108-1190 |
| Remote Hydraulics Manifold Kit | 110-2626 |
| Tire-Rear, 24x13-12 | 110-5132 |
| Wheel-12in x 8.0in | 114-8260 |
| Horn Kit | 115-7825 |
| Side Mirror Kit | 115-7849 |
| Roll-Over Protection System Signal Kit | 117-4825 |
| Worklight Kit | 117-4827 |
| Remote Hydraulic Float Kit | 117-4828 |
| Receiver Hitch Kit | 117-4831 |
| Trailer Signal Kit | 117-4836 |
| Canopy for Four-Post Roll-Over Protection System Kit | 119-9457 |
| Road Light and Homologation Kit | 120-5030 |
| Brake and Signal Light Kit | 120-5045 |
| High Air Intake Kit | 121-6285 |
| Trailer Brake Kit | 125-0123 |
| Tailpipe Extension Kit | 127-7397 |
| 1/3 Area Cover Kit | 127-8739 |
| Exterior Mirror Kit | 130-5448 |
| Interior Mirror Kit | 130-5449 |
| Beacon Kit | 130-5484 |
| Work Light Kit | 130-5485 |

# Attachments and Accessories (continued)

| | |
|---|---|
| Windshield Washer Fluid Kit, 2015 and after Workman MD/HD Series Utility Vehicle | 130-5615 |
| Hitch Asm | 131-3462 |
| Tire and Wheel Asm | 131-8432 |
| LED Worklight Kit | 133-0554 |
| ROPS Beacon Kit | 133-0609 |
| Bracket-light, Canopy | 133-0627 |
| Multi Pro WM Turf Sprayer | 41240 |
| Spreader Base Unit | 41253 |
| Vicon Spreader | 41256 |
| Topdresser 1800 | 44225 |
| Core Harvester Adapter Kit | 44242 |
| Topdresser 2500 | 44507 |
| Pro Force Debris Blower | 44552 |
| Pro Force Debris Blower | 44553 |
| Pro Force Debris Blower | 44554 |
| ProPass 200 Top Dresser with Twin Spinner | 44701 |
| ProPass 200 Top Dresser with Twin Spinner and Wireless Control | 44751 |
| 12 Inch Rear Wheel Weights | 81115 |
| Automatic Tailgate Release Kit | 92-1220 |
| Fuse Block | 92-2641 |
| PTO Over Running Clutch Kit | 92-2655 |
| Topdresser 1800 Lift Kit | 92-4452 |
| Spark Arrestor Screen | 94-8157 |
| Tire-Rear, 23x8.50-12 | 98-2993 |
| Tire-Rear, Industrial | 99-1091 |

## For 07385H Workman HDX-D Utility Vehicle with Bed

| Product Name | Model/Part |
|---|---|
| Pro Sweep Turf Sweeper | 07068 |
| Full Area Flatbed | 07301 |
| Full Area Flatbed Side Kit | 07302 |
| Fold Down Side Kit | 07303 |
| High-Flow Hydraulic Kit | 07316 |
| 2/3 Area Flatbed | 07321 |
| 2/3 Area Flatbed Side Kit | 07322 |
| Bed Liner | 07331 |
| 1/3 Area Flatbed | 07341 |
| 1/3 Area Platform Lift | 07347 |
| Heater Kit | 07349 |
| Canopy | 07372 |
| Windshield | 07373 |
| 4 Post Roll-Over Protection System | 07378 |
| Cab Kit | 07392 |
| Door Kit with Sliding Window | 07393 |
| Rear PTO Kit | 07419 |
| Hand Throttle Kit | 07420 |
| Aggressive Tire Kit | 07422 |
| Synthetic Turf Conditioner, Tow-Behind Accessory | 08791 |

# Attachments and Accessories (continued)

ProCore Processor ..... 09749
Backup Alarm Kit ..... 107-8037
Premium ATF (Drum) ..... 108-1185
Premium ATF (Pail) ..... 108-1186
Premium All Purpose Grease (Tube) ..... 108-1190
Remote Hydraulics Manifold Kit ..... 110-2626
Tire-Rear, 24x13-12 ..... 110-5132
Wheel-12in x 8.0in ..... 114-8260
Horn Kit ..... 115-7825
Side Mirror Kit ..... 115-7849
Roll-Over Protection System Signal Kit ..... 117-4825
Worklight Kit ..... 117-4827
Remote Hydraulic Float Kit ..... 117-4828
Receiver Hitch Kit ..... 117-4831
Trailer Signal Kit ..... 117-4836
Canopy for Four-Post Roll-Over Protection System Kit ..... 119-9457
Road Light and Homologation Kit ..... 120-5030
Brake and Signal Light Kit ..... 120-5045
High Air Intake Kit ..... 121-6285
Trailer Brake Kit ..... 125-0123
Tailpipe Extension Kit ..... 127-7397
1/3 Area Cover Kit ..... 127-8739
Exterior Mirror Kit ..... 130-5448
Interior Mirror Kit ..... 130-5449
Beacon Kit ..... 130-5484
Work Light Kit ..... 130-5485
Windshield Washer Fluid Kit, 2015 and after Workman MD/HD Series Utility Vehicle ..... 130-5615
Hitch Asm ..... 131-3462
Tire and Wheel Asm ..... 131-8432
LED Worklight Kit ..... 133-0554
ROPS Beacon Kit ..... 133-0609
Bracket-light, Canopy ..... 133-0627
Multi Pro WM Turf Sprayer ..... 41240
Spreader Base Unit ..... 41253
Vicon Spreader ..... 41256
Topdresser 1800 ..... 44225
Core Harvester Adapter Kit ..... 44242
Topdresser 2500 ..... 44507
Pro Force Debris Blower ..... 44552
Pro Force Debris Blower ..... 44553
Pro Force Debris Blower ..... 44554
ProPass 200 Top Dresser with Twin Spinner ..... 44701
ProPass 200 Top Dresser with Twin Spinner and Wireless Control ..... 44751
12 Inch Rear Wheel Weights ..... 81115
Automatic Tailgate Release Kit ..... 92-1220
Fuse Block ..... 92-2641
PTO Over Running Clutch Kit ..... 92-2655
Topdresser 1800 Lift Kit ..... 92-4452
Spark Arrestor Screen ..... 94-8157

# Attachments and Accessories (continued)

Tire-Rear, 23x8.50-12 ..... 98-2993
Tire-Rear, Industrial ..... 99-1091

**Notes:**

**Notes:**

**Notes:**

TORO®

Count on it.