Form No. 3427-803 Rev B

TORO®

Count on it.

Parts Catalog

# Workman® HDX-D

## 4-Wheel Drive Utility Vehicle with Bed

**Model No. 07387—Serial No. 404350001 and Up**

Register at www.Toro.com.
Original Instructions (EN)

*3427-803* B

# Ordering Replacement Parts

To order replacement parts, please supply the part number, the quantity, and the description of each part desired.

### Understanding Reference Numbers

Each identified part in an illustration has a reference number. The reference number for a part also appears in the parts list, along with other information about the part.

This catalog uses two special reference number formats, one to indicate parts in a service assembly and another to indicate the quantity of a given part in an illustration.

### Service Assembly Reference Numbers

Parts in service assemblies have reference numbers in the form a:b. The a represents the reference number of the entire service assembly and the b represents a sequential number unique to each part within the service assembly.

For example, a wheel assembly might be identified by reference number 6, the tire by 6:1, the valve by 6:2, and the wheel by 6:3. When you order the assembly identified by reference number 6, you receive all parts identified by reference numbers 6:1,6:2, and 6:3. However, you may also order any part individually. Reference numbers of this type appear in illustration and in parts lists.

### Reference Numbers Indicating Quantity

In an illustration, if a reference number indicates more than one part, the reference number has the form nX y. The n represents the quantity of the part, the X is the multiplication symbol, and the y represents the reference number.

For example, in an illustration, the reference number 2X 37 means that two of the parts identified by reference number 37 are indicated.

# Contents


Front Frame Assembly . . . 5
Rear Frame and Suspension Assembly . . . 6
Rear Axle Assembly . . . 7
Brake Caliper Assembly No. 127-7424 . . . 9
Driveshaft Assembly . . . 10
Front and Rear Brake Line Assembly . . . 11
Front Suspension Assembly . . . 12
Steering and Front Wheel Assembly . . . 13
Steering Linkage Assembly . . . 14
Hydraulic Cylinder Assembly No. 120-5059 . . . 15
Front Control Arm Assembly . . . 16
Brake and Clutch Pedal Assembly . . . 17
Master Cylinder Assembly No. 104-6782 . . . 18
Accelerator Pedal Assembly . . . 19
Console Assembly . . . 20
Shift Assembly No. 106-7887 . . . 22
Bumper, Hood and Seat Base Assembly . . . 23
Dash Assembly . . . 24
Steering Hydraulic Assembly . . . 25
Steering Valve Assembly No. 120-4813 . . . 26
Seat Assembly . . . 27
Roll-Over Protection System Assembly . . . 28
Full Bed and Side Panel Assembly . . . 29
Engine Sub Frame Assembly . . . 30
Engine Assembly . . . 31
Cooling System Assembly . . . 32
Radiator Assembly . . . 33
Clutch Linkage Assembly . . . 34
Transaxle Assembly . . . 35
Case Assembly 4 Wheel Drive Transaxle Assembly No. 115-2175 . . . 36
Center Plate Assembly 4 Wheel Drive Transaxle Assembly No. 115-2175 . . . 37
Main Shaft Assembly 4 Wheel Drive Transaxle Assembly No. 115-2175 . . . 38
Reduction Shaft Assembly 4 Wheel Drive Transaxle Assembly No. 115-2175 . . . 39
Reverse Shaft Assembly 4 Wheel Drive Transaxle Assembly No. 115-2175 . . . 40
Main Shift Assembly 4 Wheel Drive Transaxle Assembly No. 115-2175 . . . 41
Hi-Lo Shift Assembly 4 Wheel Drive Transaxle Assembly No. 115-2175 . . . 42
Countershaft Assembly 4 Wheel Drive Transaxle Assembly No. 115-2175 . . . 43
Differential Gear Assembly 4 Wheel Drive Transaxle Assembly No. 115-2175 . . . 44
Differential Carrier Assembly 4 Wheel Drive Transaxle Assembly No. 115-2175 . . . 45
Differential Lock Assembly 4 Wheel Drive Transaxle Assembly No. 115-2175 . . . 46
Axle Shaft Assembly 4 Wheel Drive Transaxle Assembly No. 115-2175 . . . 47
Front Drive Assembly 4 Wheel Drive Transaxle Assembly No. 115-2175 . . . 48
4 Wheel Drive Assembly . . . 49
Differential Assembly No. 119-0824 . . . 50
Drive Shaft Assembly No. 136-6327 . . . 51
Battery Assembly . . . 52
Tail Light and Fender Assembly . . . 53
Fuel System Assembly . . . 54
Hydraulic Lift Cylinder Assembly . . . 55
Hydraulic Cylinder Assembly No. 133-0620 . . . 57
Main Hydraulic Pump and Lift Valve Assembly . . . 58
Control Valve Assembly No. 43-1950 . . . 60
Hydraulic Gear Pump Assembly No. 114-8302 . . . 61
Air Cleaner Assembly . . . 62



**© 2019—The Toro® Company**


**8111 Lyndale Avenue South**
**Bloomington, MN 55420**





**Contact us at www.Toro.com.**
**Printed in the USA.**


**All Rights Reserved**

# Contents (continued)

Air Cleaner Assembly No. 138-5650 . . . 63
Front and Rear Wire Harness Assembly . . . 64
Crankcase Assembly . . . 65
Oil Pan Assembly . . . 66
Cylinder Head Assembly . . . 67
Gear Case and Oil Filter Cartridge Assembly . . . 68
Cylinder Head Cover Assembly . . . 69
Oil Pump and Dipstick Assembly . . . 70
Main Bearing Case Assembly . . . 71
Camshaft and Idle Gear Shaft Assembly . . . 72
Piston and Crankshaft Assembly . . . 73
Flywheel Assembly . . . 74
Fuel Camshaft Assembly . . . 75
Idle Apparatus Assembly . . . 76
Stop Solenoid and Fuel Pump Cover Assembly . . . 77
Injection Pump Assembly . . . 78
Governor Assembly . . . 79
Speed Control Plate Assembly . . . 80
Nozzle Holder and Glow Plug Assembly . . . 81
Nozzle Holder Assembly . . . 82
Alternator and Pulley Assembly . . . 85
Alternator Components Assembly . . . 86
Starter Installation Assembly . . . 87
Starter Component Assembly . . . 88
Water Flange and Thermostat Assembly . . . 89
Water Pump and Water Pipe Assembly . . . 90
Valve and Rocker Arm Assembly . . . 91
Inlet and Exhaust Manifold Assembly . . . 92
Miscellaneous Engine Parts . . . 93
Attachments and Accessories . . . 94

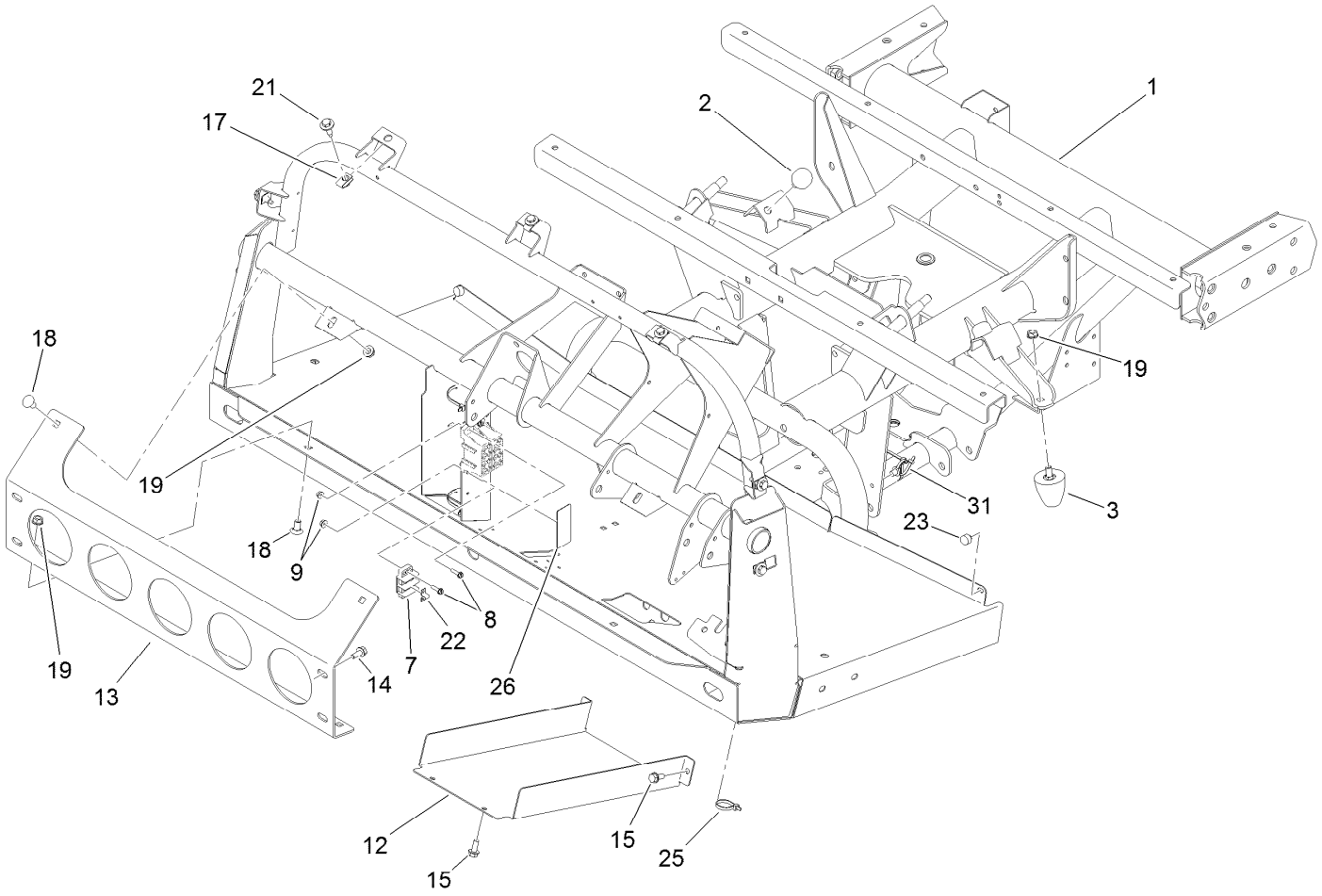


# Front Frame Assembly

| Ref. | Part Number | Qty. | Description |
|---|---|---|---|
| 1 | 138-9251 | 1 | Frame-Front |
| 2 | 87-2440 | 2 | Bumper-Rubber |
| 3 | 26-0071 | 2 | Snubber-Rubber |
| 7 | 42862 | 1 | Block-Terminal, Ground |
| 8 | 32105-13 | 6 | Screw-HWH |
| 9 | 3290-148 | 6 | Nut-HF |
| 12 | 106-2427-03 | 1 | Cover |
| 13 | 114-8272-03 | 1 | Bracket-Bumper |
| 14 | 3234-5 | 4 | Screw-HHF |
| 15 | 32144-70 | 4 | Screw-HWHTF |

| Ref. | Part Number | Qty. | Description |
|---|---|---|---|
| 17 | 94-2413 | 7 | Nut-U |
| 18 | 3231-21 | 4 | Screw-CARR |
| 19 | 3290-357 | 6 | Nut-HHF, Whiz |
| 21 | 114-8418 | 7 | Screw-HWH, Sems |
| 22 | 42863 | 1 | Strip-Jumper |
| 23 | 107-8042 | 2 | Bumper-Rubber |
| 25 | 3290-379 | 9 | Tie-Cable |
| 26 | 115-7813 | 1 | Decal-Fuse |
| 31 | 32180-030 | 2 | Clip-Tie |

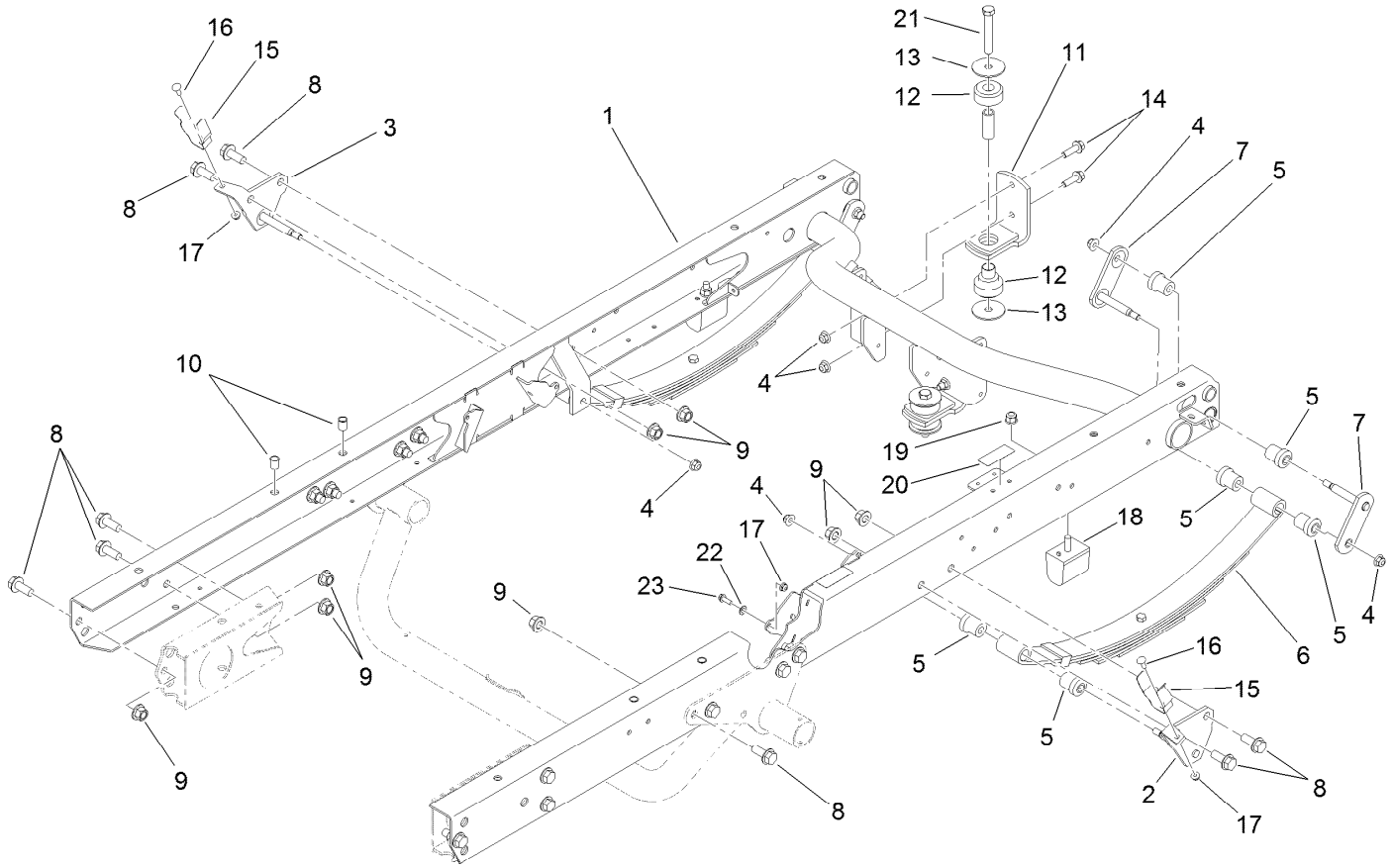


# Rear Frame and Suspension Assembly

| Ref. | Part Number | Qty. | Description |
|---|---|---|---|
| 1 | 115-2255-03 | 1 | Frame-Rear |
| 2 | 131-3474 | 1 | Mount-Spring, LH |
| 3 | 131-3472 | 1 | Mount-Spring, RH |
| 4 | 104-8301 | 10 | Nut-HF, NI |
| 5 | 87-4760 | 12 | Bushing-Rubber |
| 6 | 87-1490 | 2 | Spring-Leaf, Rear |
| 7 | 131-3476 | 4 | Shackle |
| 8 | 3234-38 | 18 | Screw-HHF |
| 9 | 99-5107 | 18 | Nut-Lock |
| 10 | 32148-9 | 4 | Nut-Clinch |
| 11 | 87-5800-03 | 2 | Mount-Transaxle |
| 12 | 106-7865 | 2 | Mount-Engine |

| Ref. | Part Number | Qty. | Description |
|---|---|---|---|
| 13 | 87-5100 | 4 | Washer-Snubbing |
| 14 | 3234-24 | 4 | Screw-HHF |
| 15 | 108-3109 | 2 | Retainer-Cylinder |
| 16 | 3229-1 | 2 | Bolt-CARR |
| 17 | 104-7201 | 3 | Nut-HF |
| 18 | 87-3470 | 2 | Bumper |
| 19 | 103-9511 | 2 | Nut-Lock, NI |
| 20 | 115-2047 | 2 | Decal-Surface, Hot |
| 21 | 33116-080 | 2 | Screw-HH |
| 22 | 3255-8 | 1 | Washer-Lock |
| 23 | 32105-15 | 1 | Screw-HWH |

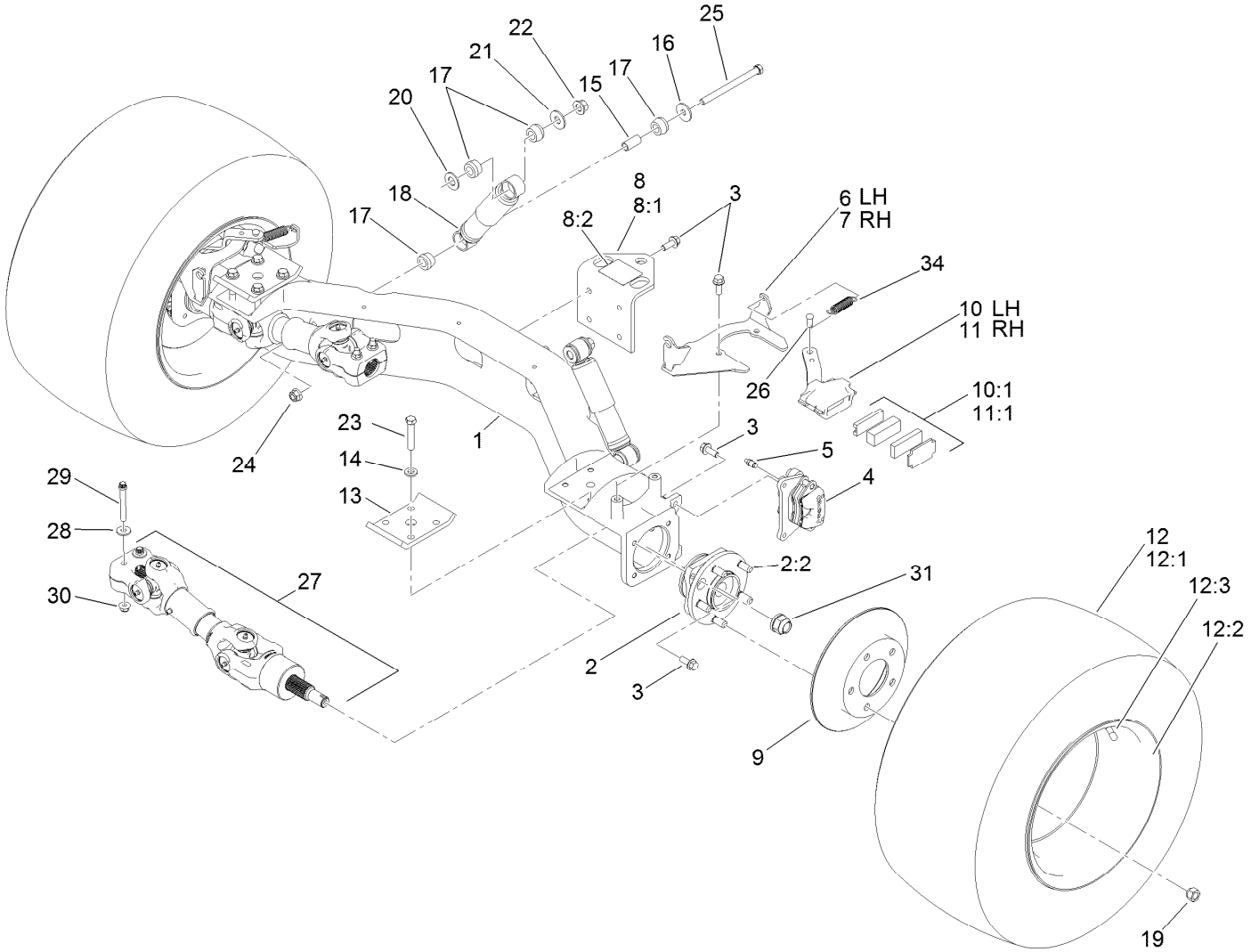


# Rear Axle Assembly

| Ref. | Part Number | Qty. | Description |
|---|---|---|---|
| 1 | 119-9515 | 1 | Axle-Rear |
| 2 | 121-9751 | 2 | Hub-Bearing, Wheel |
| 2:2 | 121-9752 | 5 | Stud-Wheel |
| 3 | 3234-11 | 20 | Screw-HHF |
| 4 | 127-7424 | 2 | Brake Caliper ASM |
| 5 | 119-9509 | 2 | Screw-Bleed |
| 6 | 115-2362-03 | 1 | Bracket-Caliper, LH |
| 7 | 115-2359-03 | 1 | Bracket-Caliper, RH |
| 8 | 115-7742 | 1 | Hitch ASM |
| 8:1 | 92-5951-03 | 1 | Angle-Hitch |
| 8:2 | 136-1163 | 1 | Decal-Load, Towing |
| 9 | 114-8351 | 2 | Rotor-Brake |
| 10 | 114-8365 | 1 | Caliper-Mechanical, LH |
| 10:1 | 115-7847 | 1 | Parking Brake Pad Kit |
| 11 | 114-8366 | 1 | Caliper-Mechanical, RH |
| 11:1 | 115-7847 | 1 | Parking Brake Pad Kit |
| 12 | 131-8428 | 2 | Tire/Wheel ASM |
| 12:1 | 131-6673 | 1 | Tire-Rear |

| Ref. | Part Number | Qty. | Description |
|---|---|---|---|
| 12:2 | 131-8429 | 1 | Wheel |
| 12:3 | 232-27 | 1 | Stem-Valve |
| 13 | 87-7470-03 | 2 | Plate-Spring, Clamp |
| 14 | 87-7480 | 8 | Washer |
| 15 | 87-3600 | 2 | Spacer-Absorber, Shock |
| 16 | 87-5330 | 2 | Washer |
| 17 | 87-3920 | 8 | Bushing |
| 18 | 121-9774 | 2 | Absorber-Shock |
| 19 | 242-50 | 10 | Nut-Lug |
| 20 | 3256-27 | 2 | Washer-Flat |
| 21 | 3256-6 | 2 | Washer-Flat |
| 22 | 99-5107 | 2 | Nut-Lock |
| 23 | 115-2398 | 8 | Bolt-HH |
| 24 | 114-8417 | 2 | Nut-HF, NI |
| 25 | 114-8424 | 2 | Screw-HH |
| 26 | 283-85 | 2 | Pin-Clevis |
| 27 | | 2 | Driveshaft ASM ● |
| 28 | 80-6990 | 4 | Washer-Hardened |

● Not serviced separately

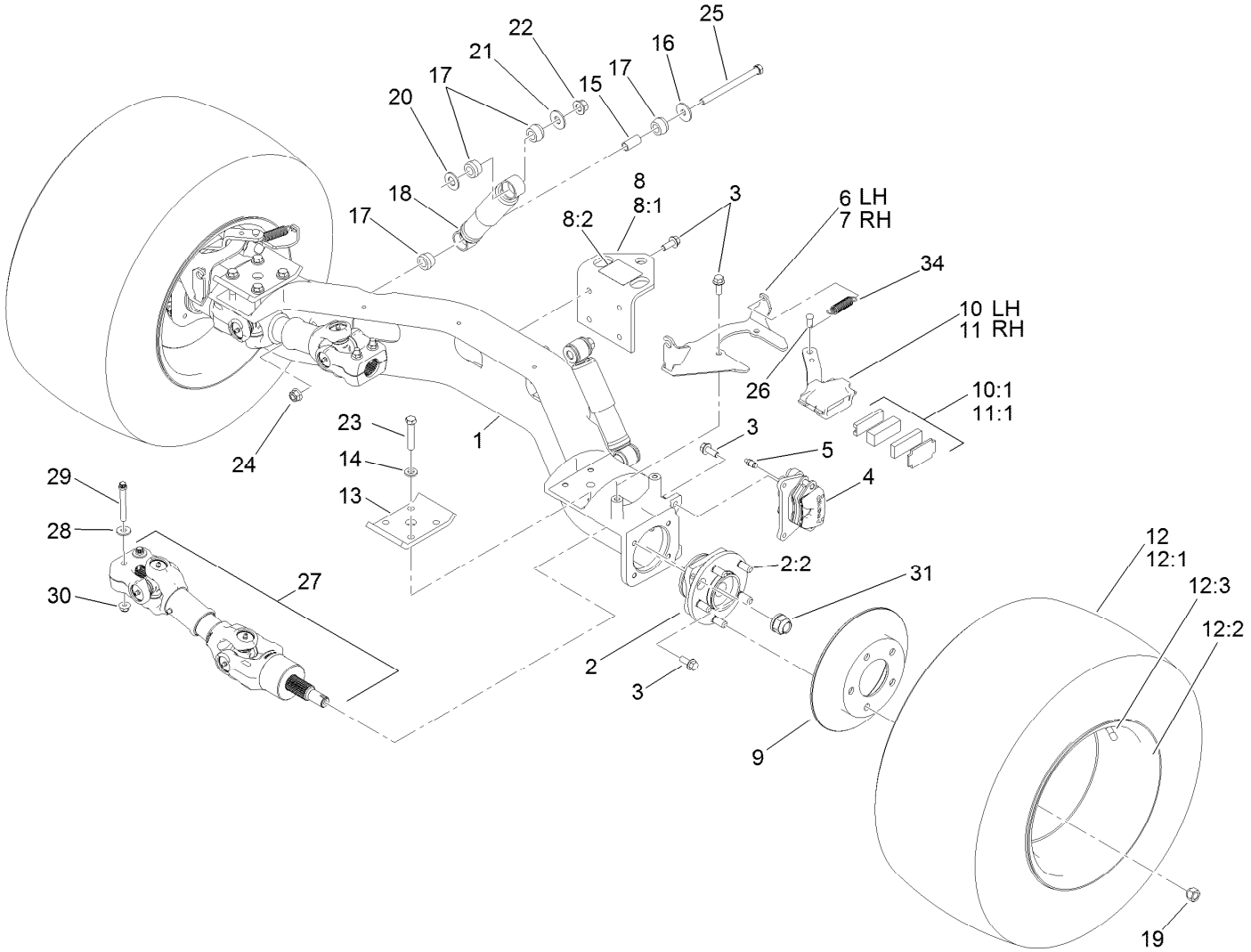


# Rear Axle Assembly (continued)

| Ref. | Part Number | Qty. | Description |
|---|---|---|---|
| 29 | 98-2939 | 4 | Screw-Cap |
| 30 | 104-8301 | 4 | Nut-HF, NI |

| Ref. | Part Number | Qty. | Description |
|---|---|---|---|
| 31 | 115-2164 | 2 | Nut-Spindle |
| 34 | 104-6415 | 2 | Spring-Return, Pedal |

● Not serviced separately

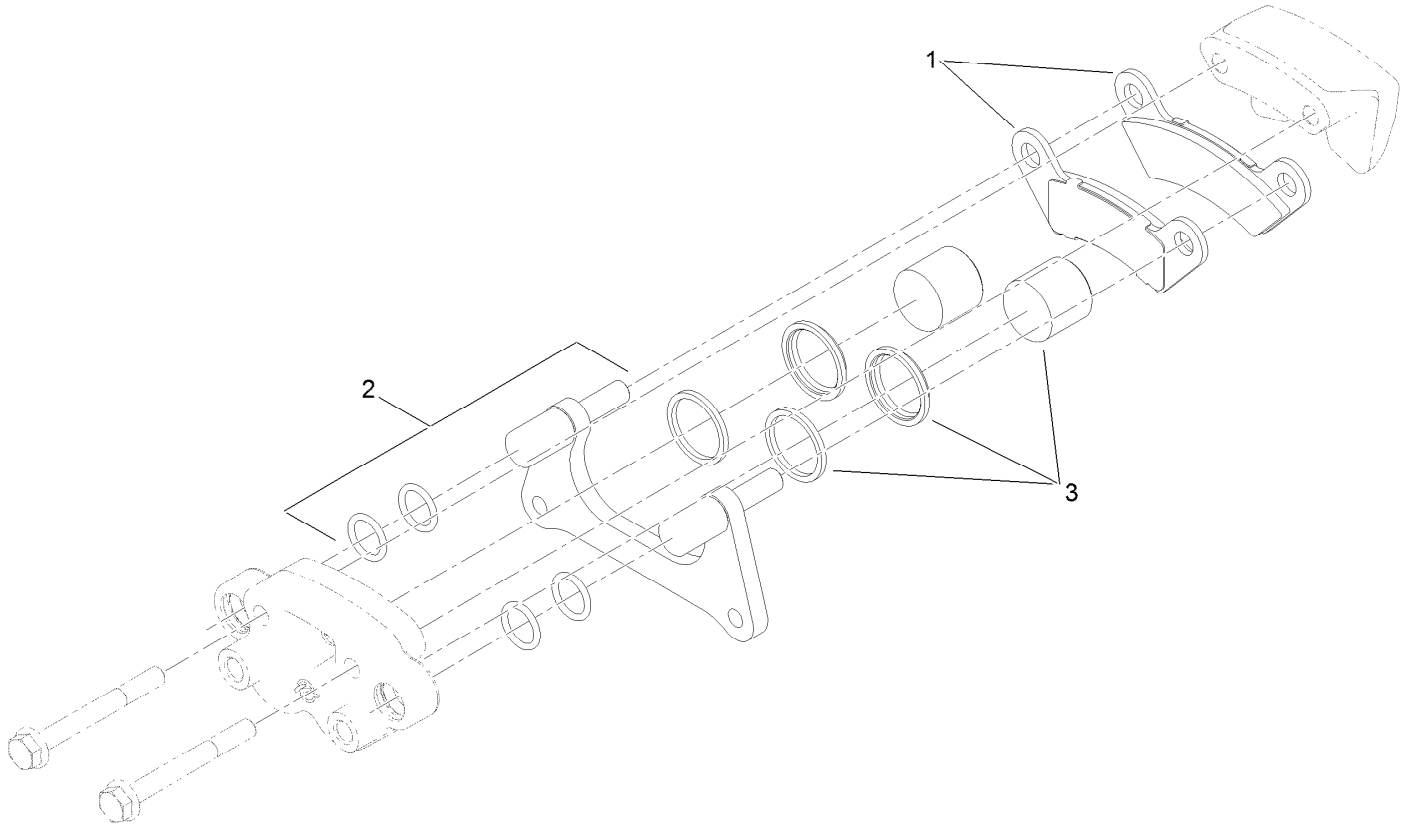


# Brake Caliper Assembly No. 127-7424

| *Ref.* | *Part Number* | *Qty.* | *Description* |
|---|---|---|---|
| 1 | 119-9510 | 1 | Pads-Brake |
| 2 | 119-9511 | 1 | Bracket Kit |
| 3 | 133-0614 | 1 | Piston Kit |

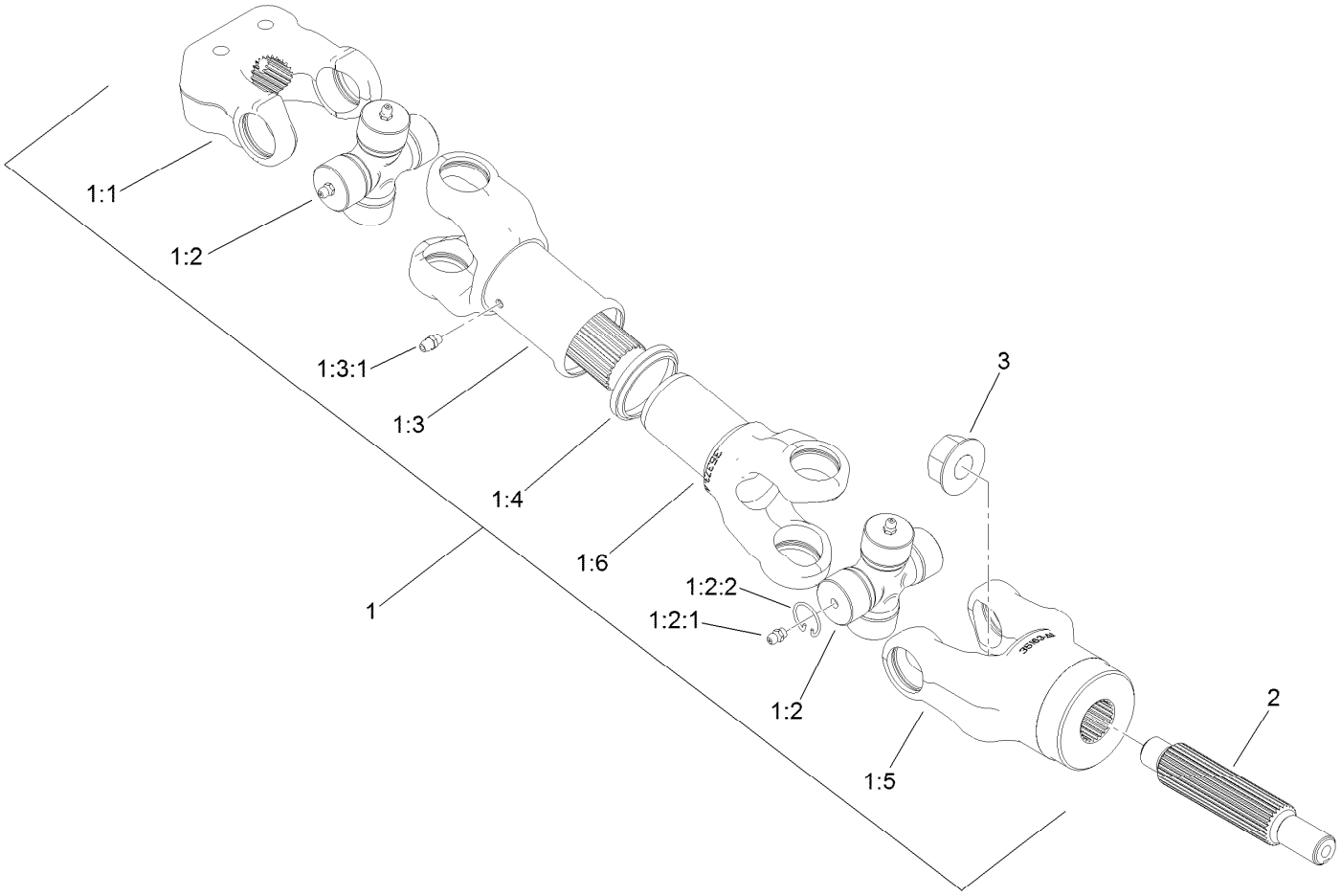


# Driveshaft Assembly

| Ref. | Part Number | Qty. | Description |
|---|---|---|---|
| 1 | 114-8367 | 1 | Driveshaft ASM |
| 1:1 | 98-2940 | 1 | Yoke |
| 1:2 | 92-4187 | 2 | Cross And Bearing Kit |
| 1:2:1 | 302-58 | 4 | Fitting-Straight |
| 1:2:2 | 92-4188 | 4 | Ring-Snap |
| 1:3 | 92-4179 | 1 | Yoke-Tube, Shaft And Seal |
| 1:3:1 | 302-5 | 1 | Fitting-Grease |
| 1:4 | 92-4180 | 1 | Seal |
| 1:5 | 115-2351 | 1 | Yoke |
| 1:6 | 92-4182 | 1 | Yoke-Telescoping |
| 2 | 115-7771 | 1 | Shaft-Splined |
| 3 | 32128-53 | 1 | Nut-HF |

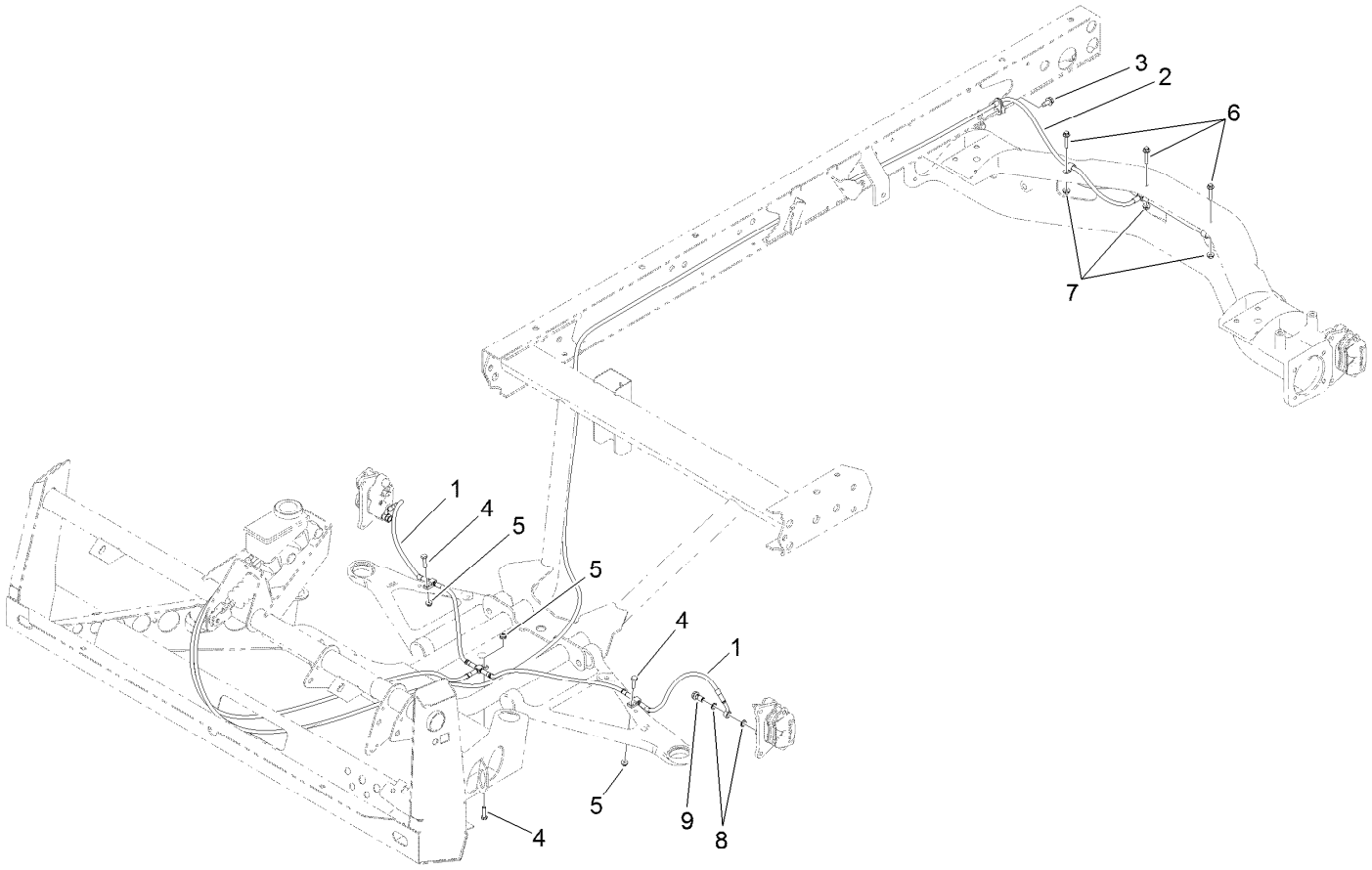


# Front and Rear Brake Line Assembly

| *Ref.* | *Part Number* | *Qty.* | *Description* |
|---|---|---|---|
| 1 | 119-9682 | 1 | Front Brake Line ASM |
| 2 | 119-9681 | 1 | Rear Brake Line ASM |
| 3 | 32144-70 | 1 | Screw-HWHTF |
| 4 | 321-6 | 3 | Screw-HH |
| 5 | 104-7201 | 3 | Nut-HF |
| 6 | 3234-21 | 3 | Screw-HHF |
| 7 | 32128-33 | 3 | Nut-HF |
| 8 | 115-2341 | 8 | Washer-Banjo |
| 9 | 120-4875 | 4 | Bolt-Flange, Banjo |

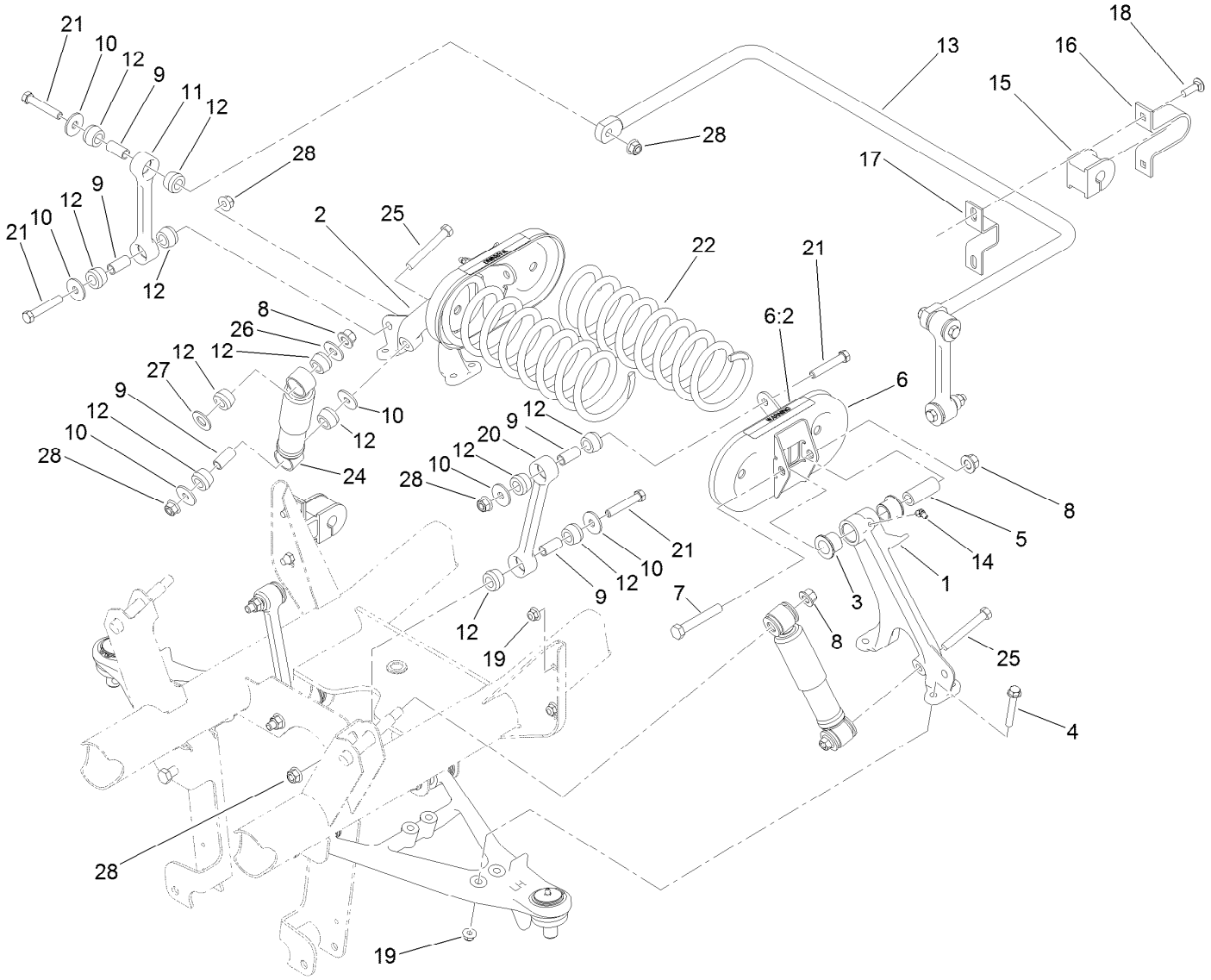


# Front Suspension Assembly

| Ref. | Part Number | Qty. | Description |
|---|---|---|---|
| 1 | 87-0160 | 1 | Tower-Control Arm, LH |
| 2 | 87-0150 | 1 | Tower-Control Arm, RH |
| 3 | 33-3090 | 4 | Bushing |
| 4 | 3234-39 | 8 | Screw-HHF |
| 5 | 87-2500 | 2 | Sleeve-Spring, Pivot |
| 6 | 105-7958 | 2 | Spring Cradle ASM |
| 6:2 | 93-9879 | 1 | Decal-Warning |
| 7 | 325-13 | 2 | Screw-HH |
| 8 | 99-5107 | 4 | Nut-Lock |
| 9 | 87-3600 | 10 | Spacer-Absorber, Shock |
| 10 | 87-5330 | 12 | Washer |
| 11 | 119-6725 | 2 | Link, Anti-Sway Bar |
| 12 | 87-3920 | 24 | Bushing |
| 13 | 133-0633-03 | 1 | Bar-Anti-Sway, HD |

| Ref. | Part Number | Qty. | Description |
|---|---|---|---|
| 14 | 302-11 | 2 | Fitting-Lube, 45 DEG |
| 15 | 87-3910 | 2 | Bushing-Rubber |
| 16 | 87-4010-03 | 2 | Clamp-Bar, Sway |
| 17 | 87-3890-03 | 2 | Bracket-Bar, Sway |
| 18 | 3231-25 | 4 | Bolt-CARR |
| 19 | 104-8301 | 12 | Nut-HF, NI |
| 20 | 119-6724 | 2 | Link-Stabilizer |
| 21 | 324-10 | 8 | Screw-HH |
| 22 | 105-4183-01 | 2 | Spring-Compression |
| 24 | 121-9774 | 2 | Absorber-Shock |
| 25 | 324-13 | 2 | Screw-HH |
| 26 | 3256-6 | 2 | Washer-Flat |
| 27 | 3256-27 | 2 | Washer-Flat |
| 28 | 114-8417 | 10 | Nut-HF, NI |

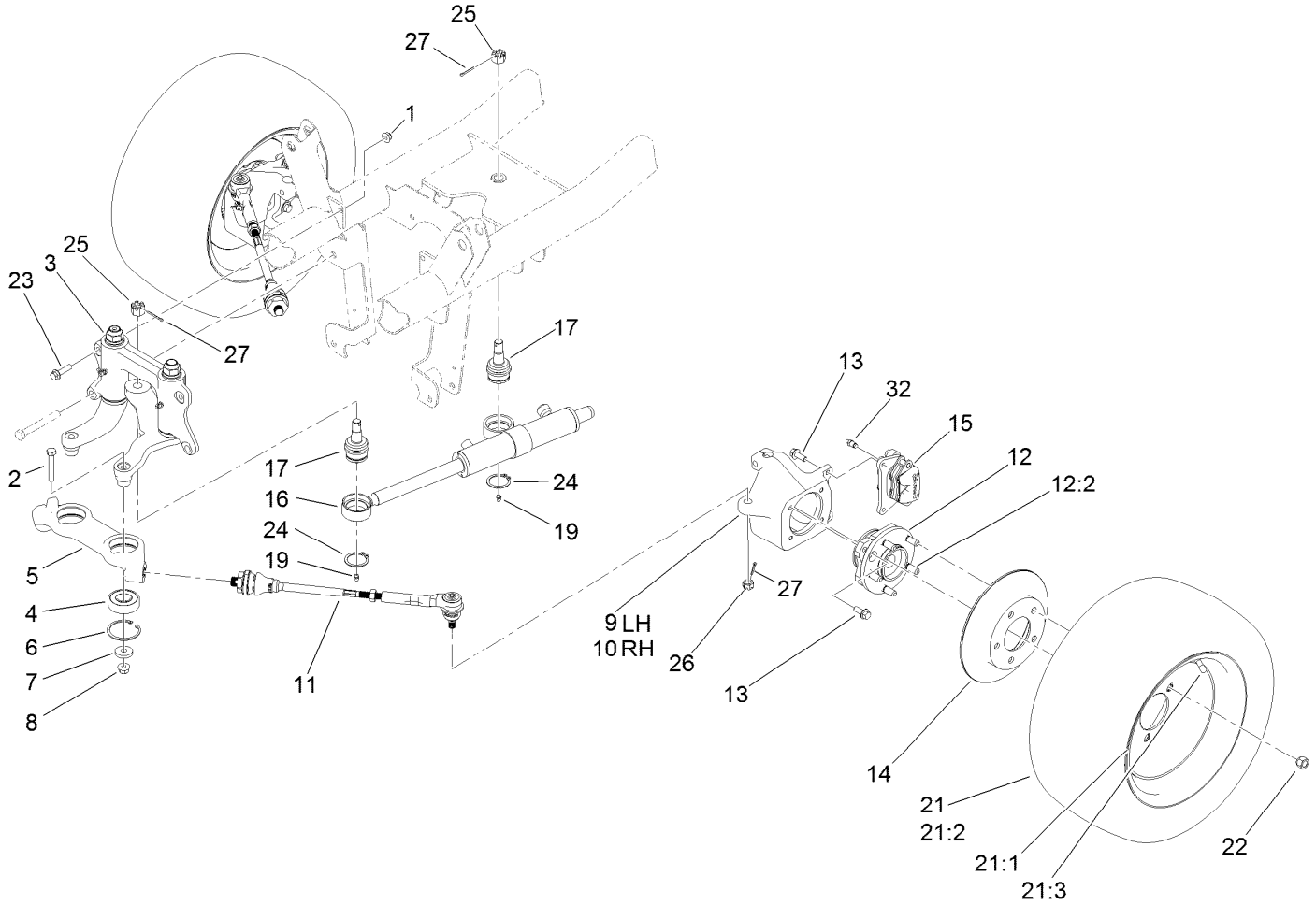


# Steering and Front Wheel Assembly

| Ref. | Part Number | Qty. | Description |
|---|---|---|---|
| 1 | 104-8301 | 2 | Nut-HF, NI |
| 2 | 324-10 | 2 | Screw-HH |
| 3 | | 1 | Steering Linkage ASM ● |
| 4 | 119-9548 | 2 | Bearing-Ball |
| 5 | 114-8296 | 1 | Link-Center |
| 6 | 32120-22 | 2 | Ring-Snap, Internal |
| 7 | 112843 | 2 | Washer |
| 8 | 114-8417 | 2 | Nut-HF, NI |
| 9 | 119-9513 | 1 | Knuckle-LH |
| 10 | 119-9514 | 1 | Knuckle-RH |
| 11 | 114-8356 | 2 | Tie Rod ASM |
| 12 | 121-9751 | 2 | Hub-Bearing, Wheel |
| 12:2 | 121-9752 | 5 | Stud-Wheel |
| 13 | 3234-11 | 12 | Screw-HHF |
| 14 | 114-8351 | 2 | Rotor-Brake |

| Ref. | Part Number | Qty. | Description |
|---|---|---|---|
| 15 | 127-7424 | 2 | Brake Caliper ASM |
| 16 | 120-5059 | 1 | HYD Cylinder ASM |
| 17 | 106-6774 | 2 | Joint-Ball |
| 19 | 302-5 | 2 | Fitting-Grease |
| 21 | 131-8430 | 2 | Tire/Wheel ASM |
| 21:1 | 131-8431 | 1 | Wheel |
| 21:2 | 131-6670 | 1 | Tire |
| 21:3 | 232-27 | 1 | Stem-Valve |
| 22 | 242-50 | 10 | Nut-Lug |
| 23 | 114-4681 | 2 | Screw-HHF |
| 24 | 32151-104 | 2 | Ring-Retaining, External |
| 25 | 32136-14 | 2 | Nut-Hst |
| 26 | 32136-3 | 2 | Nut-SHH |
| 27 | 3272-12 | 4 | Pin-Cotter |
| 32 | 119-9509 | 2 | Screw-Bleed |

● Not serviced separately

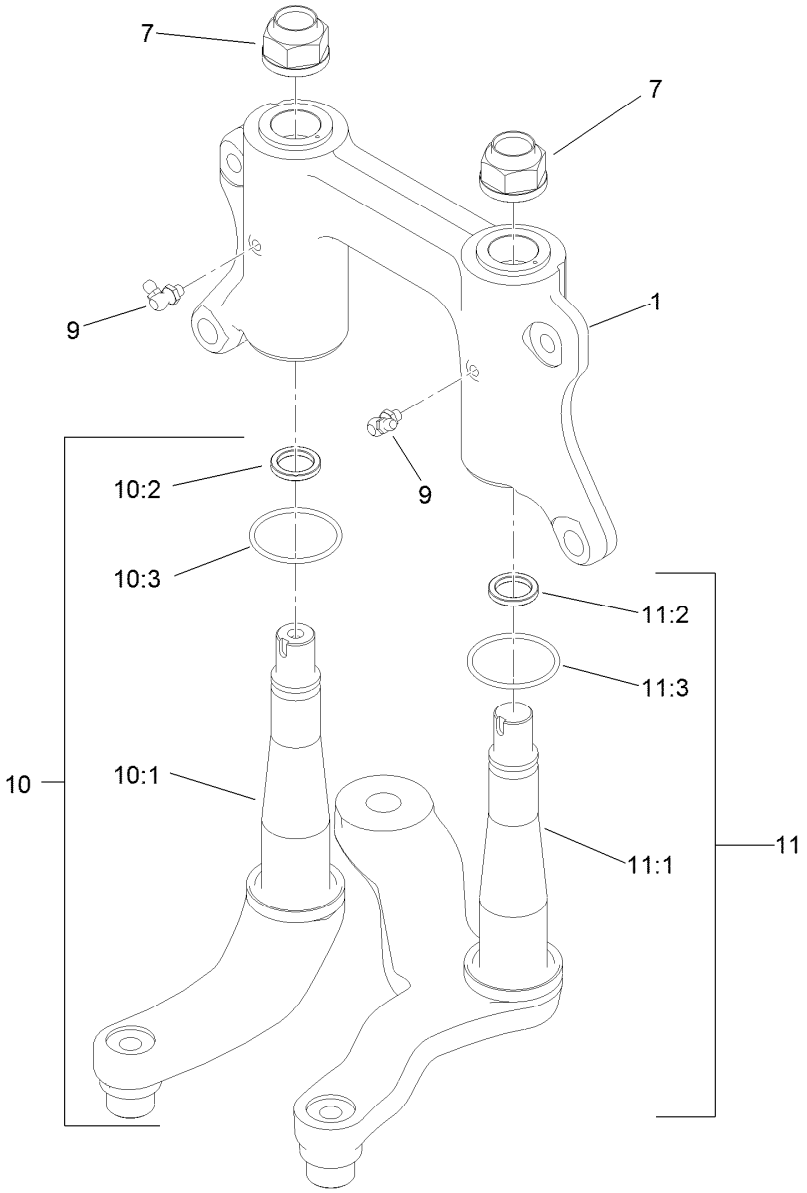


# Steering Linkage Assembly

| *Ref.* | *Part Number* | *Qty.* | *Description* |
|---|---|---|---|
| 1 | 132-6767 | 1 | Mount-Pivot, W/Bushings |
| 7 | 115-2164 | 2 | Nut-Spindle |
| 9 | 302-60 | 2 | Fitting-Grease |
| 10 | 132-0794 | 1 | Idler Arm ASM |
| 10:1 | 132-0792 | 1 | Idler Arm And Thrust Washer ASM |
| 10:2 | 93-7510 | 1 | Ring-Quad |
| 10:3 | 131-3499 | 1 | O-Ring |
| 11 | 132-0795 | 1 | Pitman Arm ASM |
| 11:1 | 132-0793 | 1 | Pitman Arm And Thrust Washer ASM |
| 11:2 | 93-7510 | 1 | Ring-Quad |
| 11:3 | 131-3499 | 1 | O-Ring |

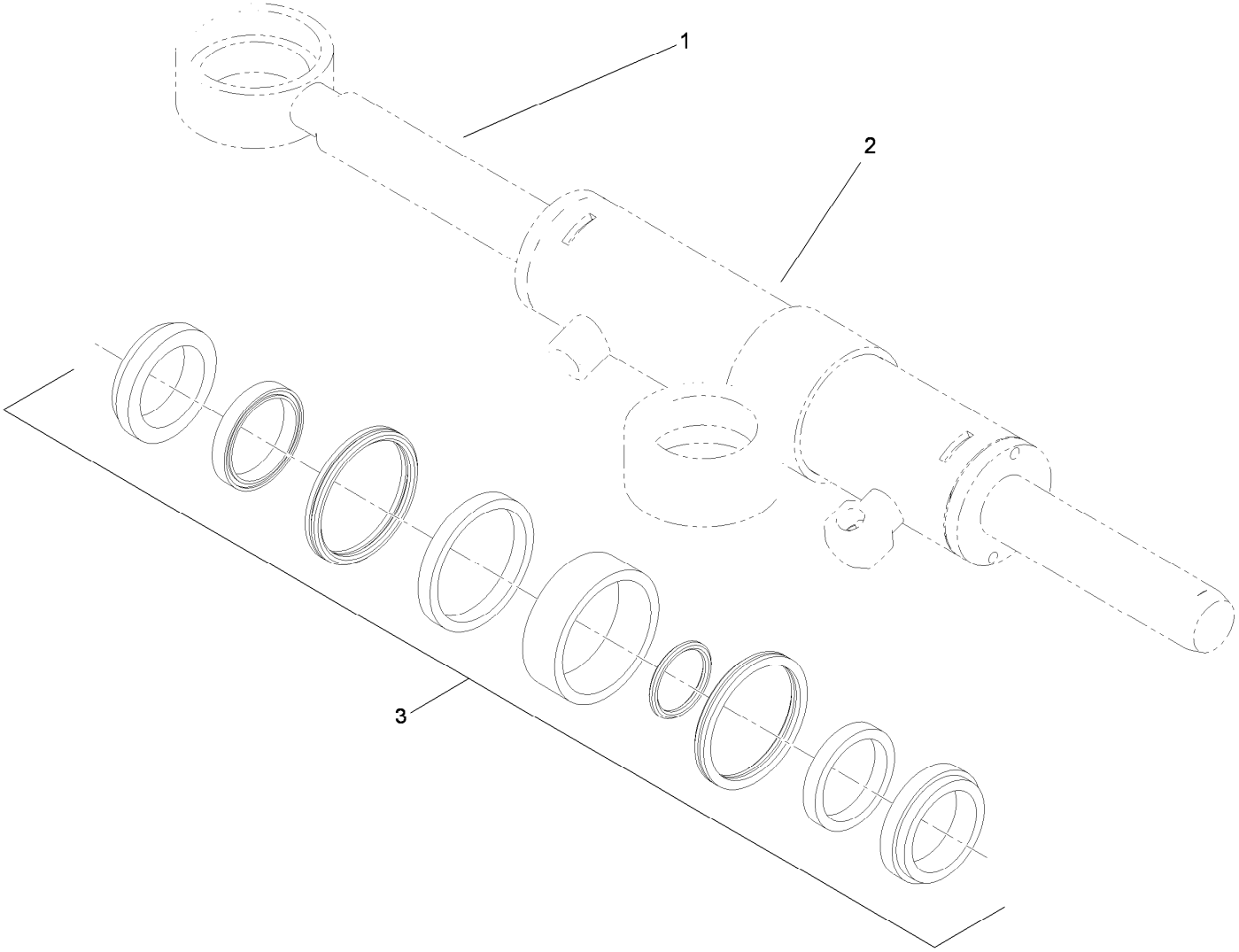


# Hydraulic Cylinder Assembly No. 120-5059

| Ref. | Part Number | Qty. | Description |
|---|---|---|---|
| 1 | | 1 | Rod-Cylinder ● |
| 2 | | 1 | Body-Cylinder ● |
| 3 | 115-2160 | 1 | Cylinder Repair Kit |

● Not serviced separately

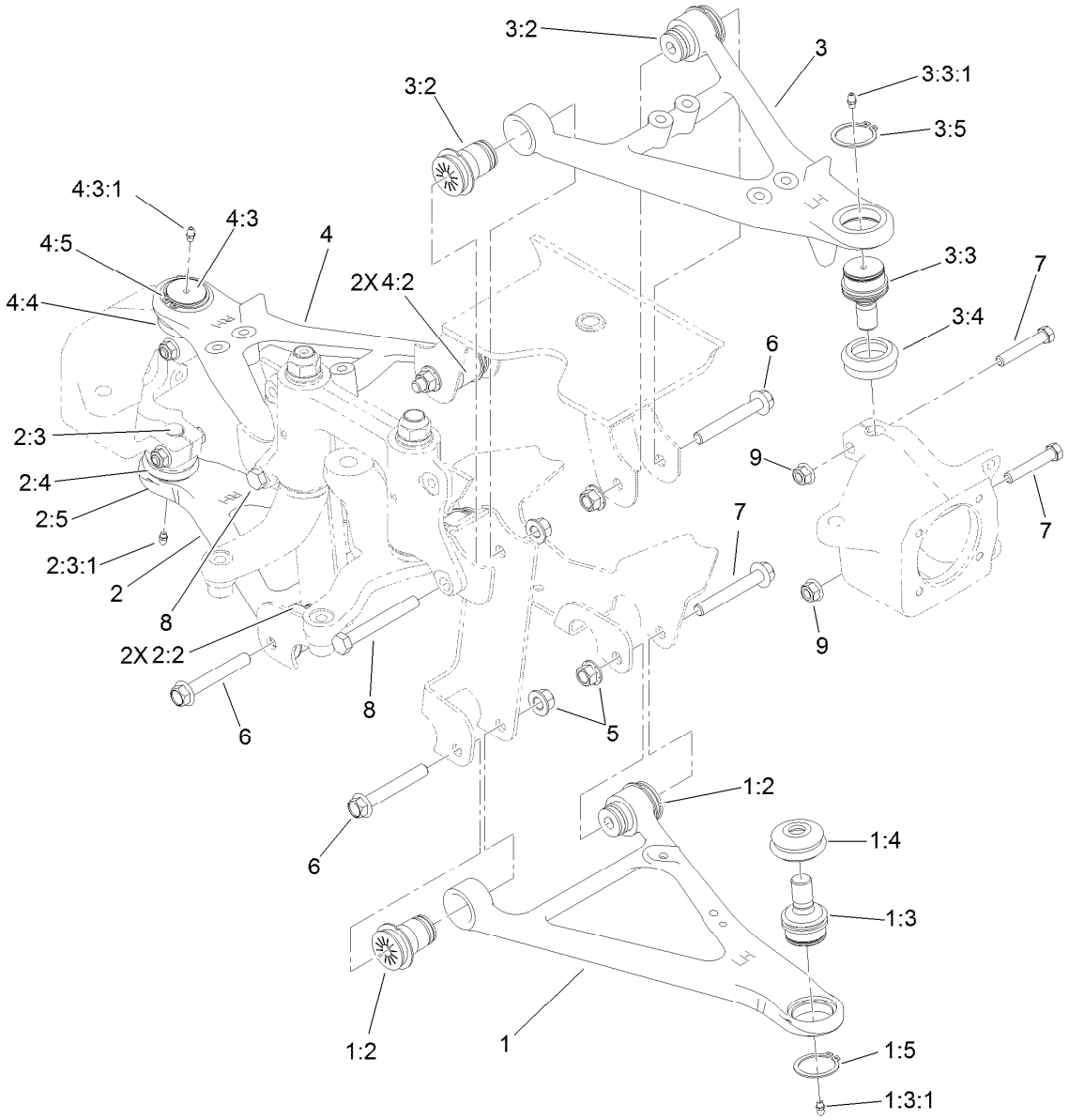


# Front Control Arm Assembly

| Ref. | Part Number | Qty. | Description |
|---|---|---|---|
| 1 | 115-2405 | 1 | Lower LH Control Arm ASM |
| 1:2 | 87-1450 | 2 | Bushing-Flange |
| 1:3 | 115-2165 | 1 | Ball Joint |
| 1:3:1 | 302-5 | 1 | Fitting-Grease |
| 1:4 | 87-2420 | 1 | Seal-Joint, Ball |
| 1:5 | 32151-104 | 1 | Ring-Retaining, External |
| 2 | 115-2407 | 1 | Lower RH Control Arm ASM |
| 2:2 | 87-1450 | 2 | Bushing-Flange |
| 2:3 | 115-2165 | 1 | Ball Joint |
| 2:3:1 | 302-5 | 1 | Fitting-Grease |
| 2:4 | 87-2420 | 1 | Seal-Joint, Ball |
| 2:5 | 32151-104 | 1 | Ring-Retaining, External |
| 3 | 115-2404 | 1 | Upper LH Control Arm ASM |
| 3:2 | 87-1450 | 2 | Bushing-Flange |
| 3:3 | 115-2165 | 1 | Ball Joint |

| Ref. | Part Number | Qty. | Description |
|---|---|---|---|
| 3:3:1 | 302-5 | 1 | Fitting-Grease |
| 3:4 | 87-2420 | 1 | Seal-Joint, Ball |
| 3:5 | 32151-104 | 1 | Ring-Retaining, External |
| 4 | 115-2406 | 1 | Upper RH Control Arm ASM |
| 4:2 | 87-1450 | 2 | Bushing-Flange |
| 4:3 | 115-2165 | 1 | Ball Joint |
| 4:3:1 | 302-5 | 1 | Fitting-Grease |
| 4:4 | 87-2420 | 1 | Seal-Joint, Ball |
| 4:5 | 32151-104 | 1 | Ring-Retaining, External |
| 5 | 99-5107 | 8 | Nut-Lock |
| 6 | 114-8419 | 6 | Screw-HHF |
| 7 | 324-10 | 4 | Screw-HH |
| 8 | 325-17 | 2 | Screw-HH |
| 9 | 114-8417 | 4 | Nut-HF, NI |

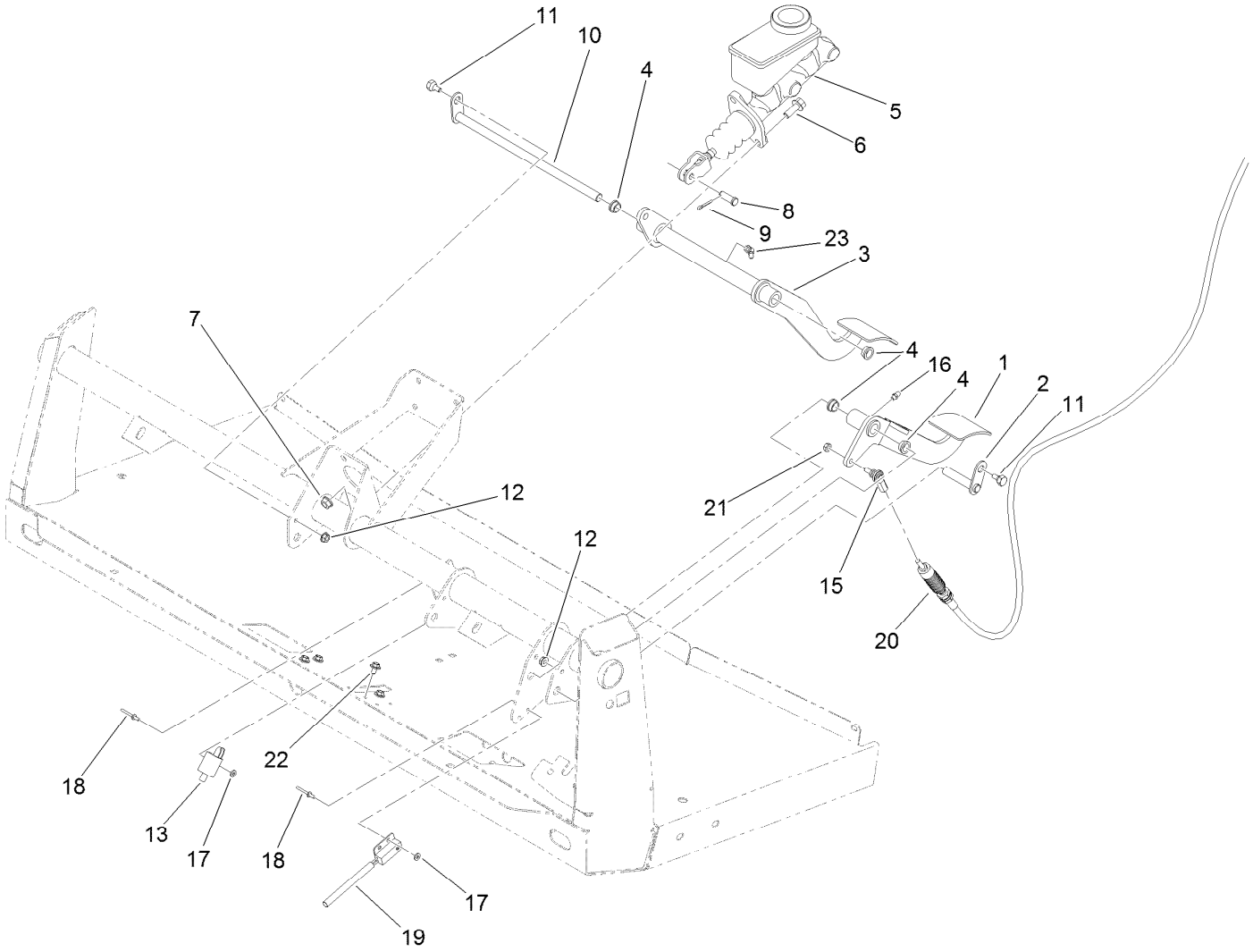


# Brake and Clutch Pedal Assembly

| Ref. | Part Number | Qty. | Description |
|---|---|---|---|
| 1 | 127-7357-03 | 1 | Pedal-Clutch |
| 2 | 115-2269 | 1 | Pin-Pivot |
| 3 | 120-5023-03 | 1 | Pedal-Brake |
| 4 | 256-156 | 4 | Bushing-Flange |
| 5 | 104-6782 | 1 | Master Cylinder ASM |
| 6 | 3234-11 | 2 | Screw-HHF |
| 7 | 3290-357 | 2 | Nut-HHF, Whiz |
| 8 | 283-2 | 1 | Pin-Clevis |
| 9 | 3272-10 | 1 | Pin-Cotter |
| 10 | 106-2475 | 1 | Shaft-Brake |
| 11 | 63-3410 | 2 | Screw-Shoulder |

| Ref. | Part Number | Qty. | Description |
|---|---|---|---|
| 12 | 32128-33 | 2 | Nut-HF |
| 13 | 95-1653 | 1 | Switch-Pole, Single |
| 15 | 110-2554 | 1 | Rod End-Spherical |
| 16 | 302-5 | 1 | Fitting-Grease |
| 17 | 3256-21 | 4 | Washer-Flat |
| 18 | 3269-25 | 4 | Rivet-Pop |
| 19 | 105-0023 | 1 | Switch-Proximity |
| 20 | 115-2284 | 1 | Cable-Clutch |
| 21 | 3296-13 | 1 | Nut-Lock, NI |
| 22 | 46-6811 | 4 | Screw-HWH |
| 23 | 302-60 | 1 | Fitting-Grease |

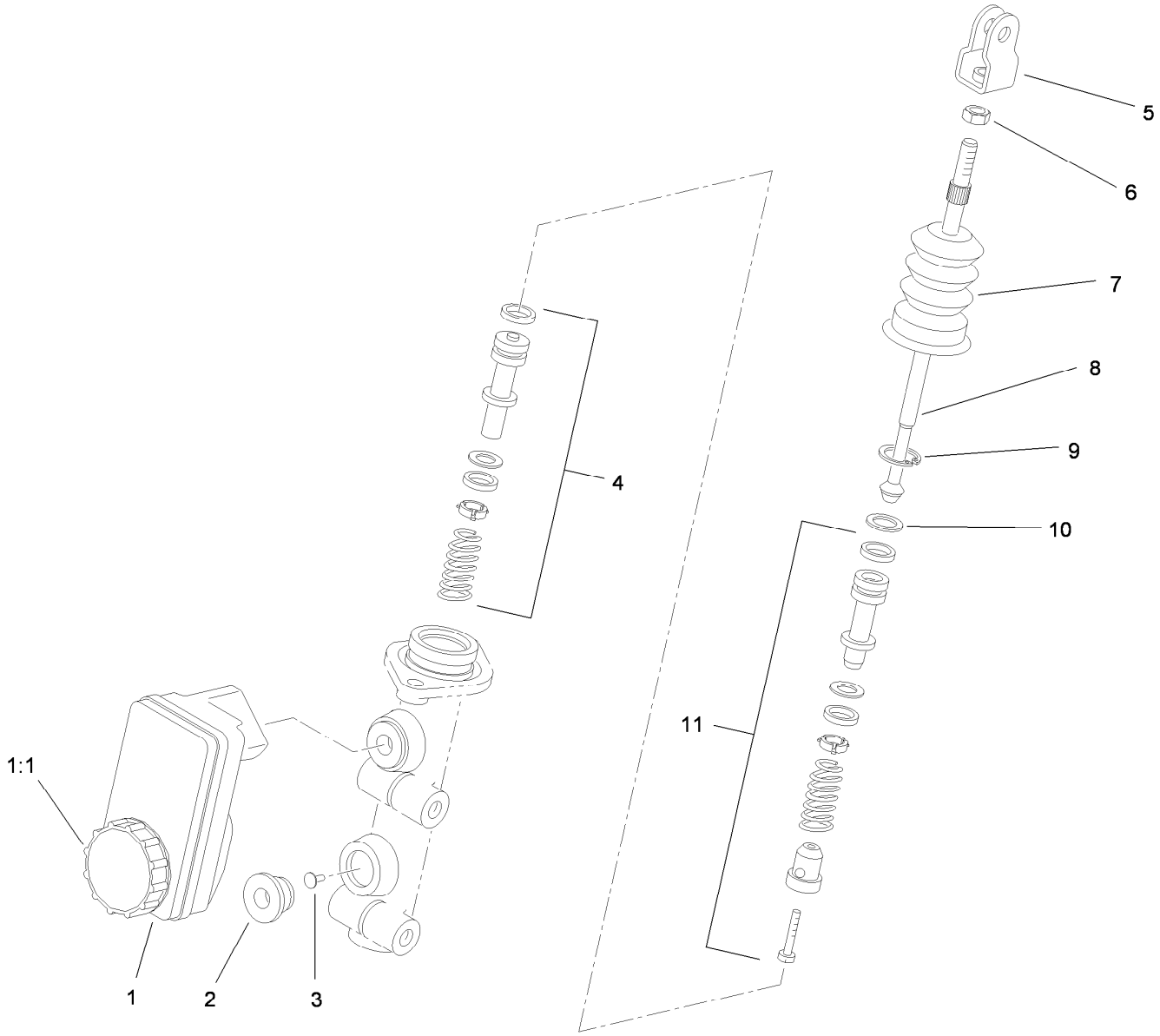


# Master Cylinder Assembly No. 104-6782

| *Ref.* | *Part Number* | *Qty.* | *Description* |
|---|---|---|---|
| 1 | 104-6845 | 1 | Reservoir ASM |
| 1:1 | 92-4112 | 1 | Cap ASM |
| 2 | 93-8971 | 2 | Seal-Port, Flange |
| 3 | 92-4103 | 1 | Pin-Stop |
| 4 | 92-4102 | 1 | Secondary Piston ASM |
| 5 | 92-4110 | 1 | Clevis |
| 6 | 21-0360 | 1 | Nut-Hex |
| 7 | 94-5209 | 1 | Cover-Dust |
| 8 | 94-5210 | 1 | Rod-Push |
| 9 | 92-4109 | 1 | Ring-Snap |
| 10 | 92-4108 | 1 | Retainer-Washer |
| 11 | 92-4101 | 1 | Primary Piston ASM |

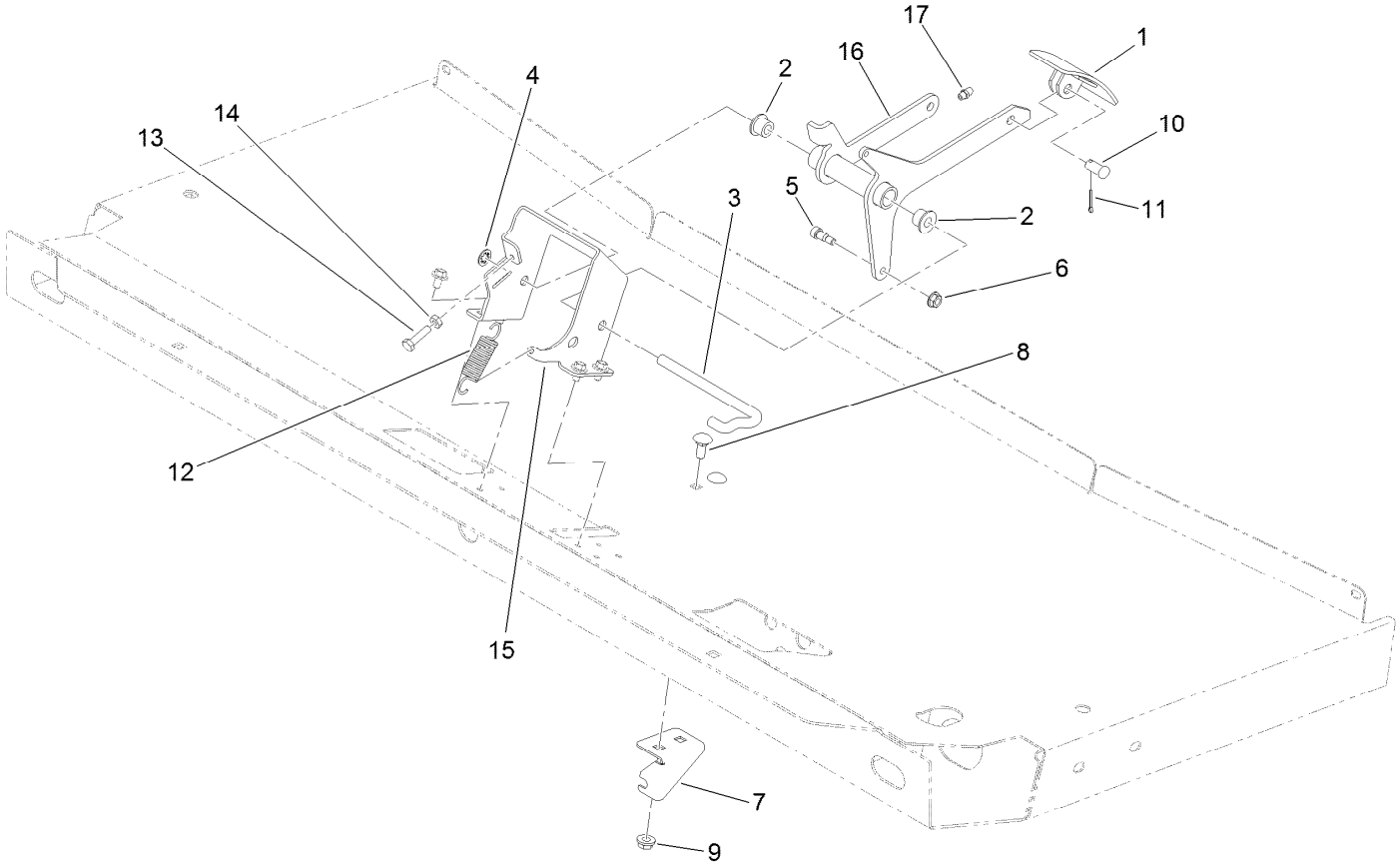


# Accelerator Pedal Assembly

| Ref. | Part Number | Qty. | Description |
|---|---|---|---|
| 1 | 93-8969-03 | 1 | Pedal |
| 2 | 256-259 | 2 | Bushing-Flange |
| 3 | 87-2880 | 1 | Shaft-Pedal, Accelerator |
| 4 | 32151-56 | 1 | Ring-Retaining, External |
| 5 | 119-4881 | 1 | Bolt-Shoulder |
| 6 | 32128-33 | 1 | Nut-HF |
| 7 | 120-4982 | 1 | Bracket-Mount, Cable |
| 8 | 3230-1 | 2 | Bolt-CARR |
| 9 | 32128-20 | 2 | Nut-HF |
| 10 | 283-85 | 1 | Pin-Clevis |
| 11 | 3272-6 | 1 | Pin-Cotter |
| 12 | 67-1450 | 1 | Spring-Idler |
| 13 | 321-6 | 1 | Screw-HH |
| 14 | 3218-1 | 1 | Nut-Jam |
| 15 | 127-8625-03 | 1 | Bracket-Mount, Pedal |
| 16 | 120-4983-03 | 1 | Pedal-Accelerator |
| 17 | 302-5 | 1 | Fitting-Grease |

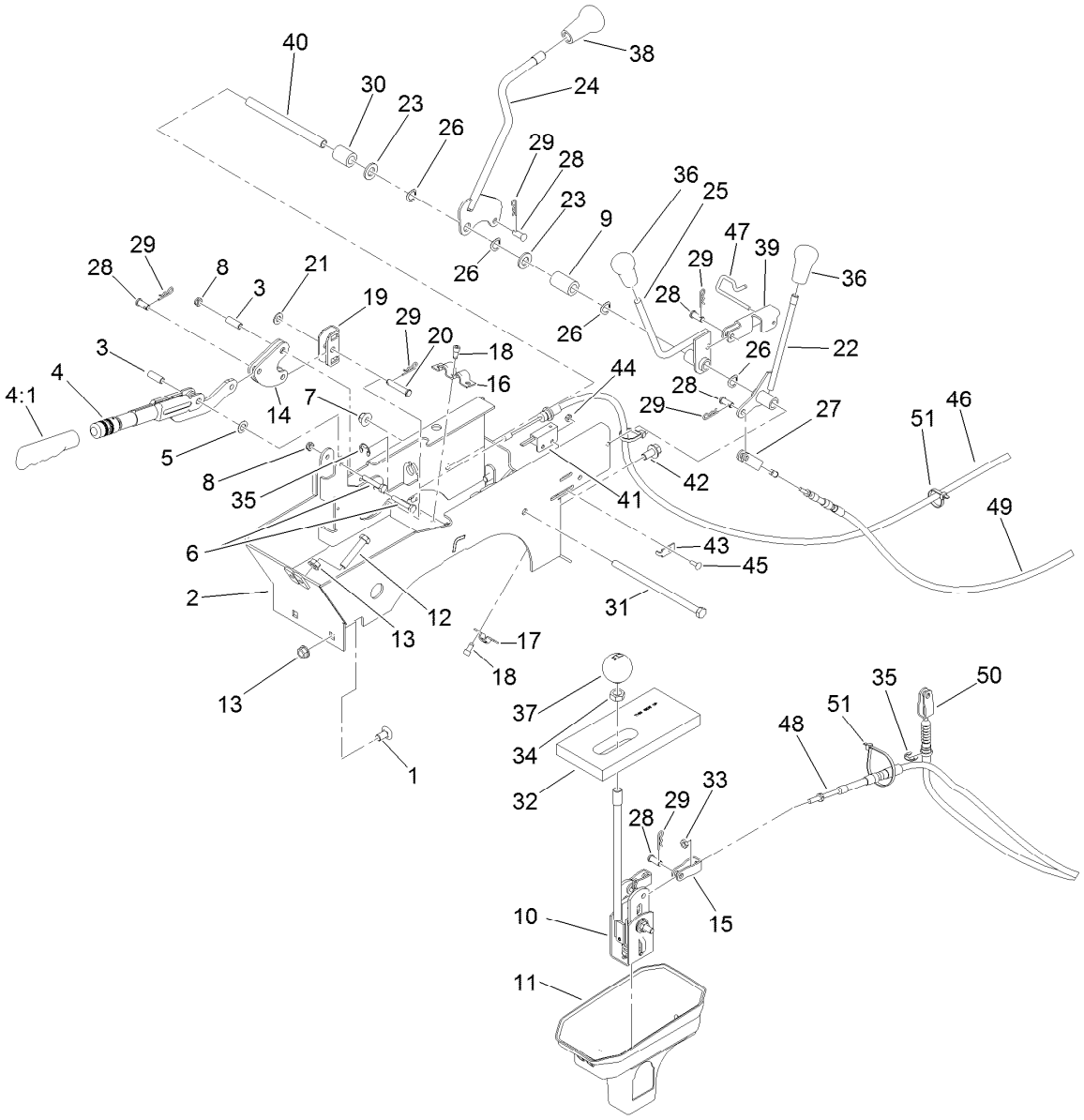


# Console Assembly

| Ref. | Part Number | Qty. | Description |
|---|---|---|---|
| 1 | 3231-21 | 2 | Screw-CARR |
| 2 | 108-6914-03 | 1 | Support-Lever |
| 3 | 114402 | 2 | Spacer |
| 4 | 127-8863 | 1 | Lever-Brake, Park |
| 4:1 | 127-8864 | 1 | Grip-Handle |
| 5 | 3290-477 | 1 | Washer-Curved |
| 6 | 321-9 | 2 | Screw-HH |
| 7 | 104-8301 | 1 | Nut-HF, NI |
| 8 | 3296-56 | 2 | Nut-Lock, NI |
| 9 | 120-5037 | 1 | Spacer |
| 10 | 106-7887 | 1 | Shift ASM |
| 11 | 106-2376 | 1 | Boot-Shift, Lower |
| 12 | 323-10 | 2 | Screw-HH |
| 13 | 3290-357 | 4 | Nut-HHF, Whiz |
| 14 | 106-7814 | 2 | Bellcrank |
| 15 | 87-2310 | 2 | Clevis-Cable |
| 16 | 87-4960 | 1 | Clamp-Cable |
| 17 | 87-4340 | 1 | Clamp-Cable |
| 18 | 65-5220 | 5 | Screw-HSH, Thread Forming |
| 19 | 87-3480 | 1 | Bracket-Equalizer, Cable |
| 20 | 94-3829 | 1 | Pin-Clevis |
| 21 | 3256-23 | 1 | Washer-Plain |
| 22 | 106-7828 | 1 | Lever |
| 23 | 33096-00 | 2 | Washer-Flat |
| 24 | 131-3479 | 1 | Lever-Lock, Differential |
| 25 | 106-7960 | 1 | Lever-HYD |
| 26 | 3290-221 | 4 | Washer-Spring |
| 27 | 87-7160 | 1 | Clevis-Cable |
| 28 | 283-62 | 6 | Pin-Clevis |
| 29 | 3290-307 | 7 | Pin-Cotter |
| 30 | 66-6501 | 1 | Spacer-Wheel |
| 31 | 323-36 | 1 | Screw-HH |
| 32 | 87-6570 | 1 | Seal-Boot, Lower |
| 33 | 3220-1 | 2 | Nut-Jam |
| 34 | 3218-18 | 1 | Nut-Jam |
| 35 | 32120-47 | 3 | Ring-Retaining, External |
| 36 | 106-7903 | 2 | Knob-Control |
| 37 | 87-6720 | 1 | Knob-Shift |
| 38 | 106-7952 | 1 | Knob |
| 39 | 115-2250 | 1 | Link |
| 40 | 106-7833 | 1 | Spacer |

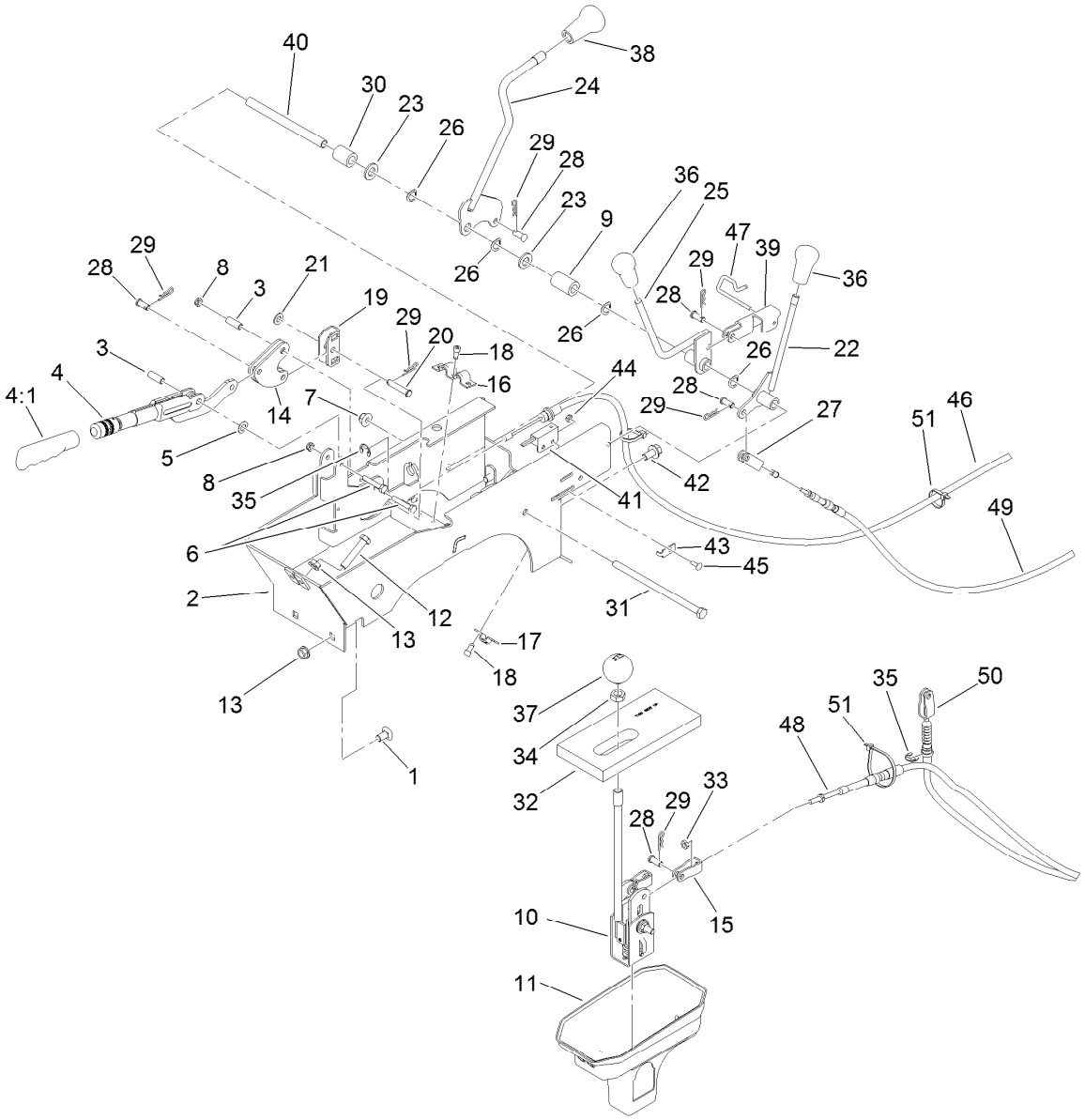


# Console Assembly (continued)

| Ref. | Part Number | Qty. | Description |
|---|---|---|---|
| 41 | 100-1270 | 1 | Switch-Proximity |
| 42 | 3234-12 | 2 | Screw-HHF |
| 43 | 100-4872 | 1 | Plate-Switch, Neutral |
| 44 | 3296-12 | 1 | Nut-Lock, NI |
| 45 | 3229-34 | 1 | Screw-CARR |
| 46 | 115-2283 | 2 | Cable-Brake, Park |

| Ref. | Part Number | Qty. | Description |
|---|---|---|---|
| 47 | 115-2350 | 1 | Pin-Retainer |
| 48 | 115-7811 | 2 | Cable-Selector, Gear |
| 49 | 115-7812 | 1 | Cable-Hi Low |
| 50 | 115-2287 | 1 | Cable-Lock, Differential |
| 51 | 3290-379 | 5 | Tie-Cable |

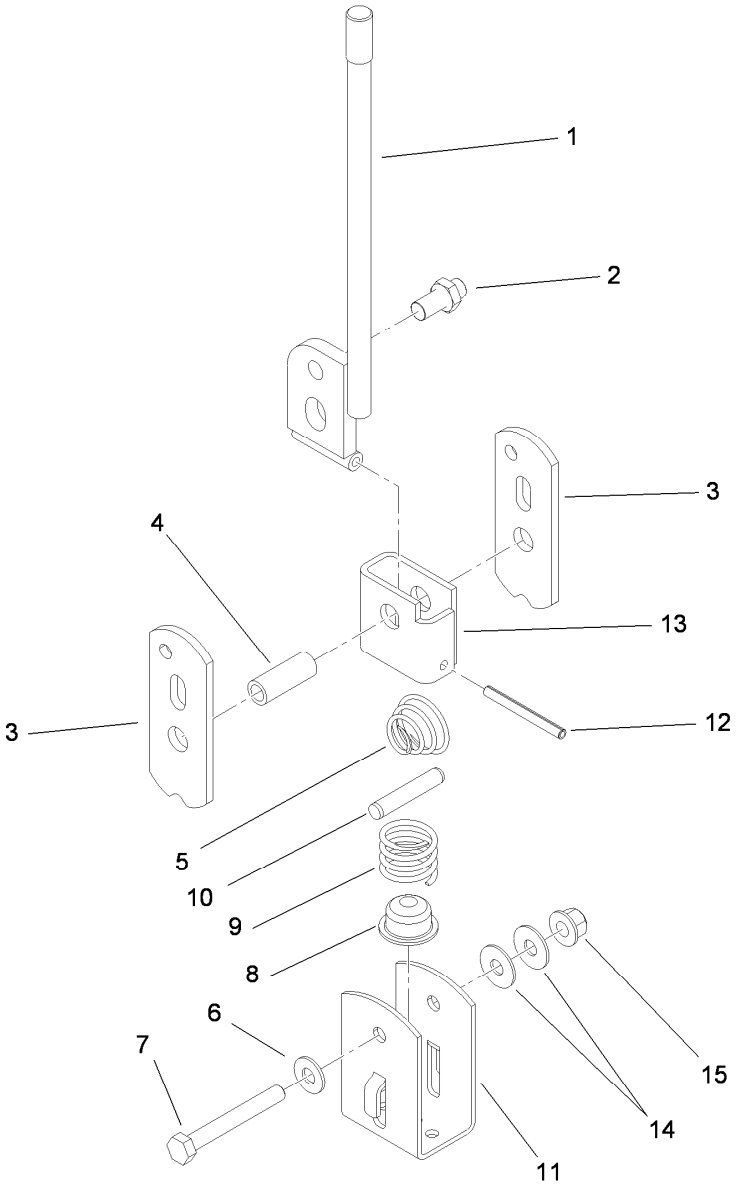


# Shift Assembly No. 106-7887

| Ref. | Part Number | Qty. | Description |
|---|---|---|---|
| 1 | 131-3469 | 1 | Lever-Shift |
| 2 | 87-3650 | 1 | Pin-Shift |
| 3 | 87-3540 | 2 | Link-Shift |
| 4 | 87-2520 | 1 | Tube-Pivot |
| 5 | 87-2900 | 1 | Spring-Compression |
| 6 | 87-8640 | 1 | Washer-Flat |
| 7 | 322-12 | 1 | Screw-HH |
| 8 | 87-3530 | 1 | Button-Shifter |
| 9 | 87-3660 | 1 | Spring-Compression |
| 10 | 3290-507 | 1 | Pin-Dowel |
| 11 | 87-3520 | 1 | Clevis |
| 12 | 32121-48 | 1 | Pin-Spring |
| 13 | 87-6040 | 1 | Bracket-Shifter |
| 14 | 3290-456 | 2 | Washer-Belleville |
| 15 | 104-8300 | 1 | Nut-HF, NI |

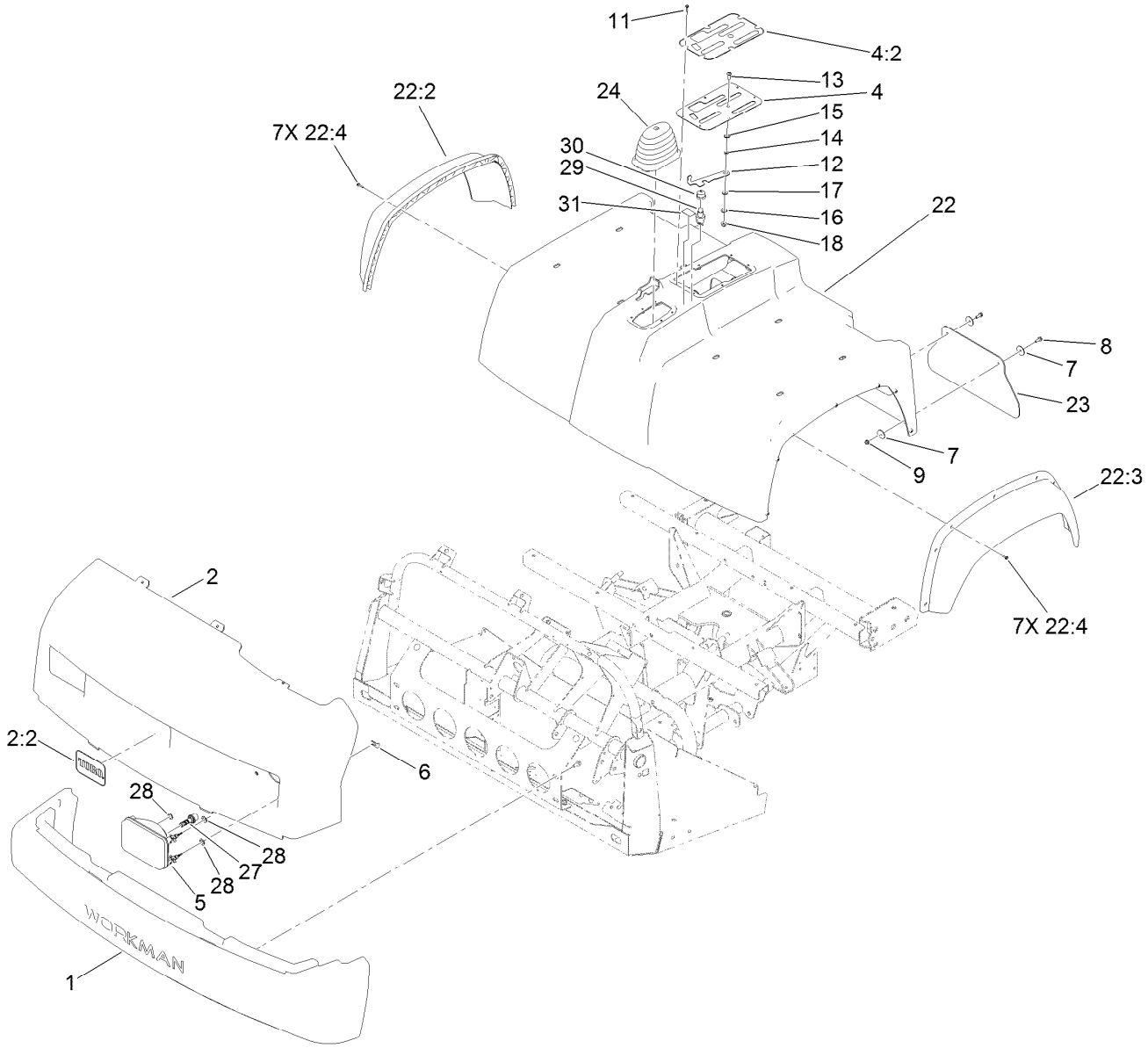


# Bumper, Hood and Seat Base Assembly

| Ref. | Part Number | Qty. | Description |
|---|---|---|---|
| 1 | 112-3185 | 1 | Bumper |
| 2 | 139-3382 | 1 | Hood ASM |
| 2:2 | 117-4950 | 1 | Decal |
| 4 | 106-7886 | 1 | Control Plate ASM |
| 4:2 | 106-2377 | 1 | Decal-Console |
| 5 | 136-6318 | 2 | Housing-Headlight, 12V |
| 6 | 114-8341 | 6 | Clip-Speed |
| 7 | 3256-55 | 8 | Washer-Flat |
| 8 | 3234-4 | 4 | Screw-HHF |
| 9 | 104-7201 | 4 | Nut-HF |
| 11 | 98-1375 | 6 | Screw-HWH |
| 12 | 106-7984 | 1 | Lever-Detent |
| 13 | 3274-55 | 1 | Screw-HSBH |
| 14 | 82-4240 | 1 | Spacer-Bearing |
| 15 | 94-8196 | 1 | Washer-Nylon |

| Ref. | Part Number | Qty. | Description |
|---|---|---|---|
| 16 | 3290-221 | 1 | Washer-Spring |
| 17 | 3256-23 | 1 | Washer-Plain |
| 18 | 104-8300 | 1 | Nut-HF, NI |
| 22 | 133-0566 | 1 | Seatbase ASM |
| 22:2 | 114-8407 | 1 | Fender-Front, RH |
| 22:3 | 114-8408 | 1 | Fender-Front, LH |
| 22:4 | 117-5036 | 14 | Screw-Plastic, HWH |
| 23 | 106-2378 | 2 | Mudflap |
| 24 | 117-8063 | 1 | Boot-Shift |
| 27 | 133-0574 | 2 | Bulb-LED |
| 28 | 112-6957 | 6 | Washer-Hardened |
| 29 | 112-3324 | 1 | Switch-Horn |
| 30 | 112-3313 | 1 | Nut-Weatherproof |
| 31 | 137-9896 | 1 | Decal-4X4 Enable |

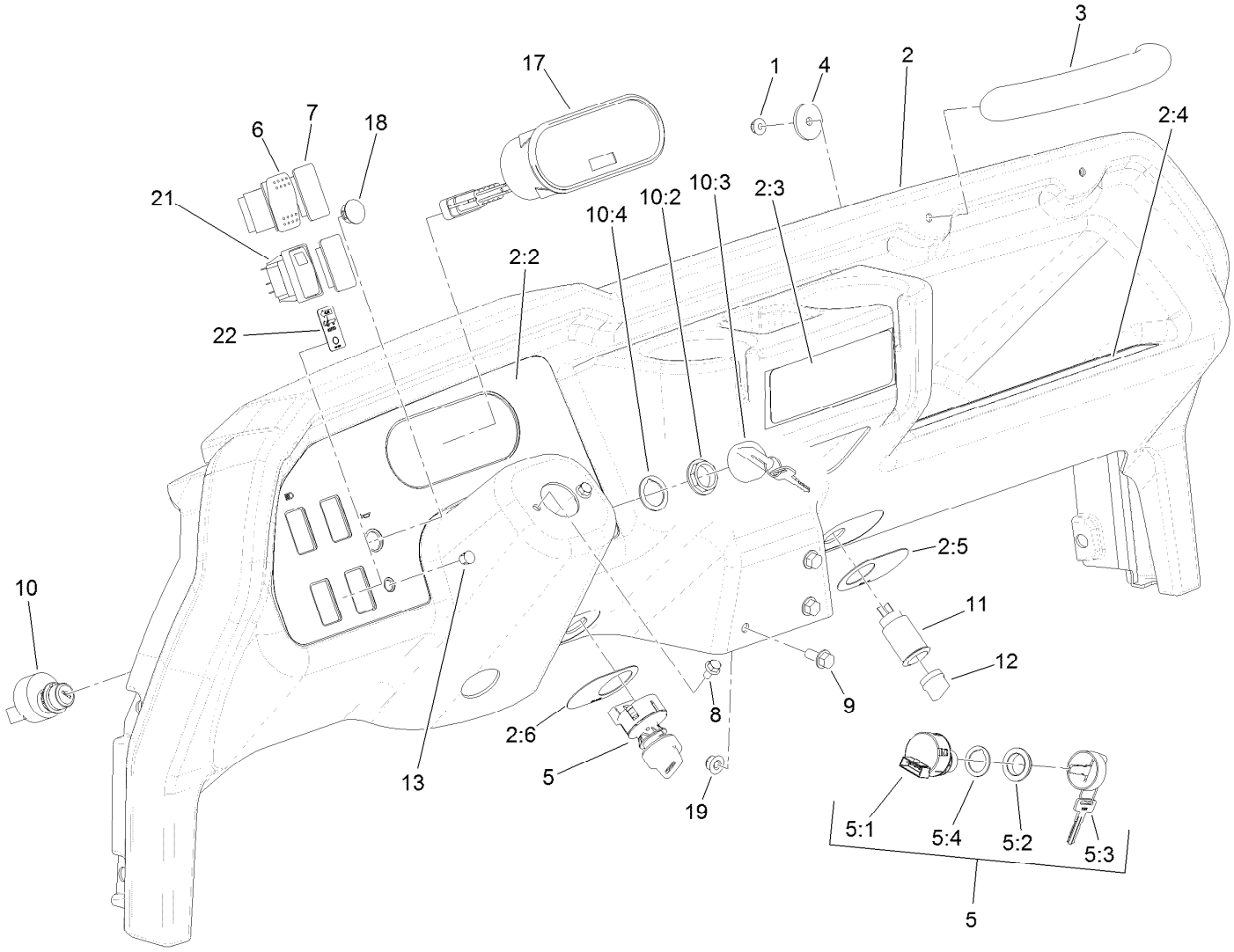


# Dash Assembly

| Ref. | Part Number | Qty. | Description |
|---|---|---|---|
| 1 | 104-7201 | 2 | Nut-HF |
| 2 | 115-7912 | 1 | Dash ASM |
| 2:2 | 138-3523 | 1 | Decal-Panel, Control |
| 2:3 | 121-9776 | 1 | Decal-Danger, Vehicle (CE) |
| 2:4 | 115-2282 | 1 | Decal-Warning, Dash |
| 2:5 | 106-2353 | 1 | Decal-Powerpoint |
| 2:6 | 106-2355 | 1 | Decal-Switch, Supervisor |
| 3 | 117-4948 | 1 | Handle-Grab |
| 4 | 103995 | 2 | Washer |
| 5 | 110-2580 | 1 | Switch-Key, Supervisor |
| 5:1 | | 1 | Switch-Key ● |
| 5:2 | 108-8660 | 1 | Nut-Mounting |
| 5:3 | 110-5221 | 1 | Set-Key, Supervisor |
| 5:4 | 108-8659 | 1 | Washer-Backup |
| 6 | 95-8999 | 1 | Switch |

| Ref. | Part Number | Qty. | Description |
|---|---|---|---|
| 7 | 99-7420 | 3 | Plug-Hole |
| 8 | 33103-012 | 2 | Screw-HHF |
| 9 | 3234-5 | 3 | Screw-HHF |
| 10 | 106-5269 | 1 | Ignition Switch ASM |
| 10:2 | 108-8660 | 1 | Nut-Mounting |
| 10:3 | 106-5270 | 1 | Ignition Key Set |
| 10:4 | 108-8659 | 1 | Washer-Backup |
| 11 | 99-7411 | 1 | Point-Power |
| 12 | 99-7416 | 1 | Cap |
| 13 | 104-9368 | 1 | Plug-Dome |
| 17 | 138-3564 | 1 | Cluster-Instrument |
| 18 | 94-5627 | 1 | Plug |
| 19 | 104-8300 | 3 | Nut-HF, NI |
| 21 | 104-9007 | 1 | Switch-Rocker |
| 22 | 137-9895 | 1 | Decal-4Wd Auto |

● Not serviced separately

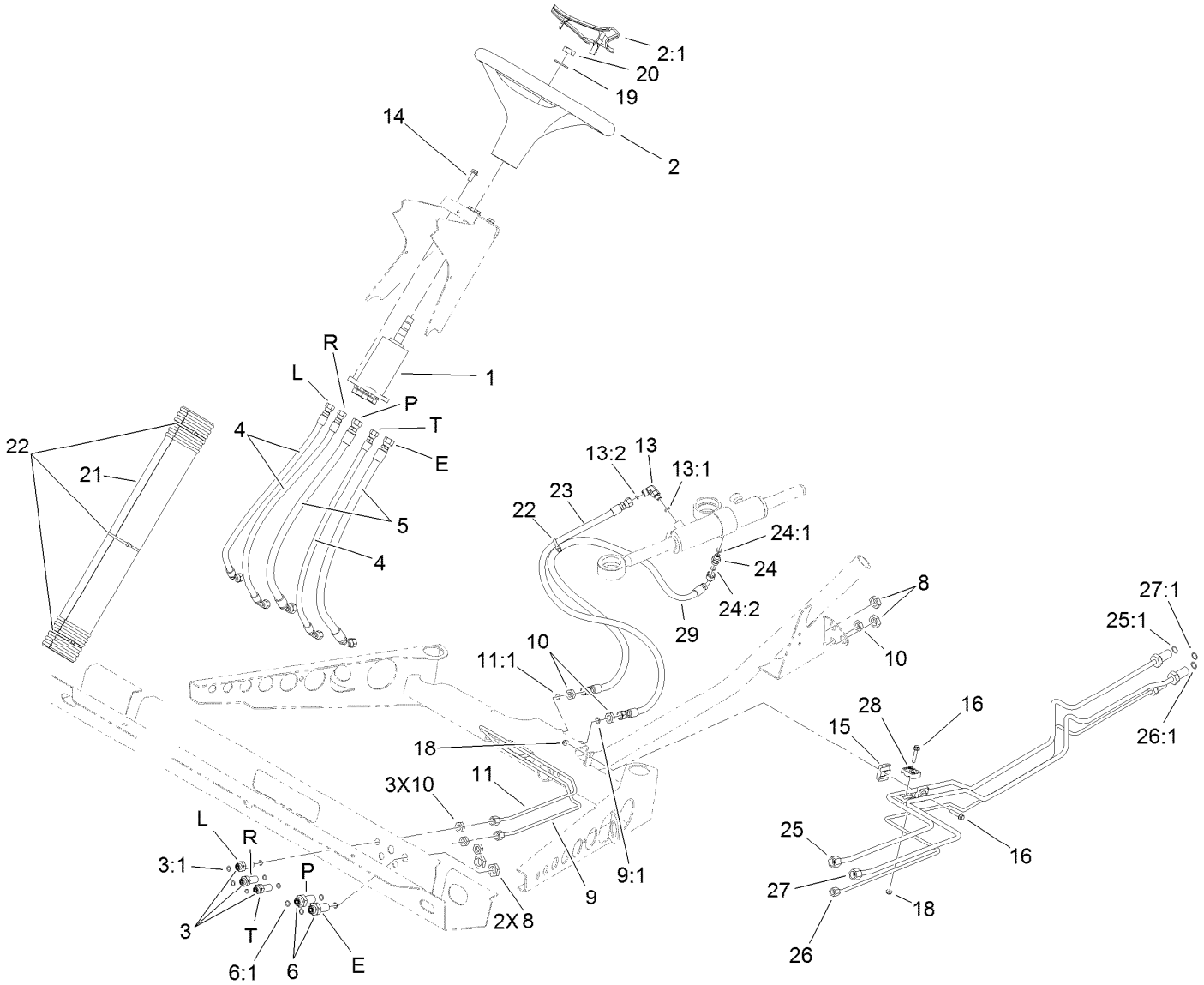


# Steering Hydraulic Assembly

| Ref. | Part Number | Qty. | Description |
|---|---|---|---|
| 1 | 120-4813 | 1 | Pump-Steering |
| 2 | 98-1471 | 1 | Wheel-Steering |
| 2:1 | 98-1468 | 1 | Cover-Wheel, Steering |
| 3 | 94-1444 | 3 | Union-Bulkhead |
| 3:1 | 237-21 | 2 | O-Ring |
| 4 | 106-7974 | 3 | Hose-HYD |
| 5 | 106-7975 | 2 | Hose-HYD |
| 6 | 340-71 | 2 | Fitting-Straight, Bulkhead |
| 6:1 | 237-22 | 2 | O-Ring |
| 8 | 340-70 | 4 | Nut-Lock |
| 9 | 106-7804 | 1 | Tube-HYD |
| 9:1 | 237-21 | 1 | O-Ring |
| 10 | 3219-10 | 6 | Nut-Hex |
| 11 | 106-7806 | 1 | Tube-HYD |
| 11:1 | 237-21 | 1 | O-Ring |
| 13 | 340-132 | 1 | Fitting-Elbow, 90 DEG |
| 13:1 | 237-78 | 1 | O-Ring |
| 13:2 | 237-21 | 1 | O-Ring |
| 14 | 98-7977 | 4 | Screw-HHF |

| Ref. | Part Number | Qty. | Description |
|---|---|---|---|
| 15 | 106-7839 | 2 | Clamp-Tube |
| 16 | 3234-21 | 2 | Screw-HHF |
| 18 | 104-7201 | 2 | Nut-HF |
| 19 | 3256-27 | 1 | Washer-Flat |
| 20 | 3296-33 | 1 | Nut-Lock, NI |
| 21 | 106-6713 | 1 | Cover-Lines, Steering |
| 22 | 3290-379 | 4 | Tie-Cable |
| 23 | 108-6505 | 1 | Hose-HYD |
| 24 | 340-92 | 1 | Fitting-Straight |
| 24:1 | 237-78 | 1 | O-Ring |
| 24:2 | 237-21 | 1 | O-Ring |
| 25 | 115-7701 | 1 | Tube-HYD |
| 25:1 | 237-22 | 1 | O-Ring |
| 26 | 115-7702 | 1 | Tube-HYD |
| 26:1 | 237-22 | 1 | O-Ring |
| 27 | 115-7703 | 1 | Tube-HYD |
| 27:1 | 237-21 | 1 | O-Ring |
| 28 | 56-7973 | 2 | Clamp-Tube |
| 29 | 117-4861 | 1 | Hose-HYD |

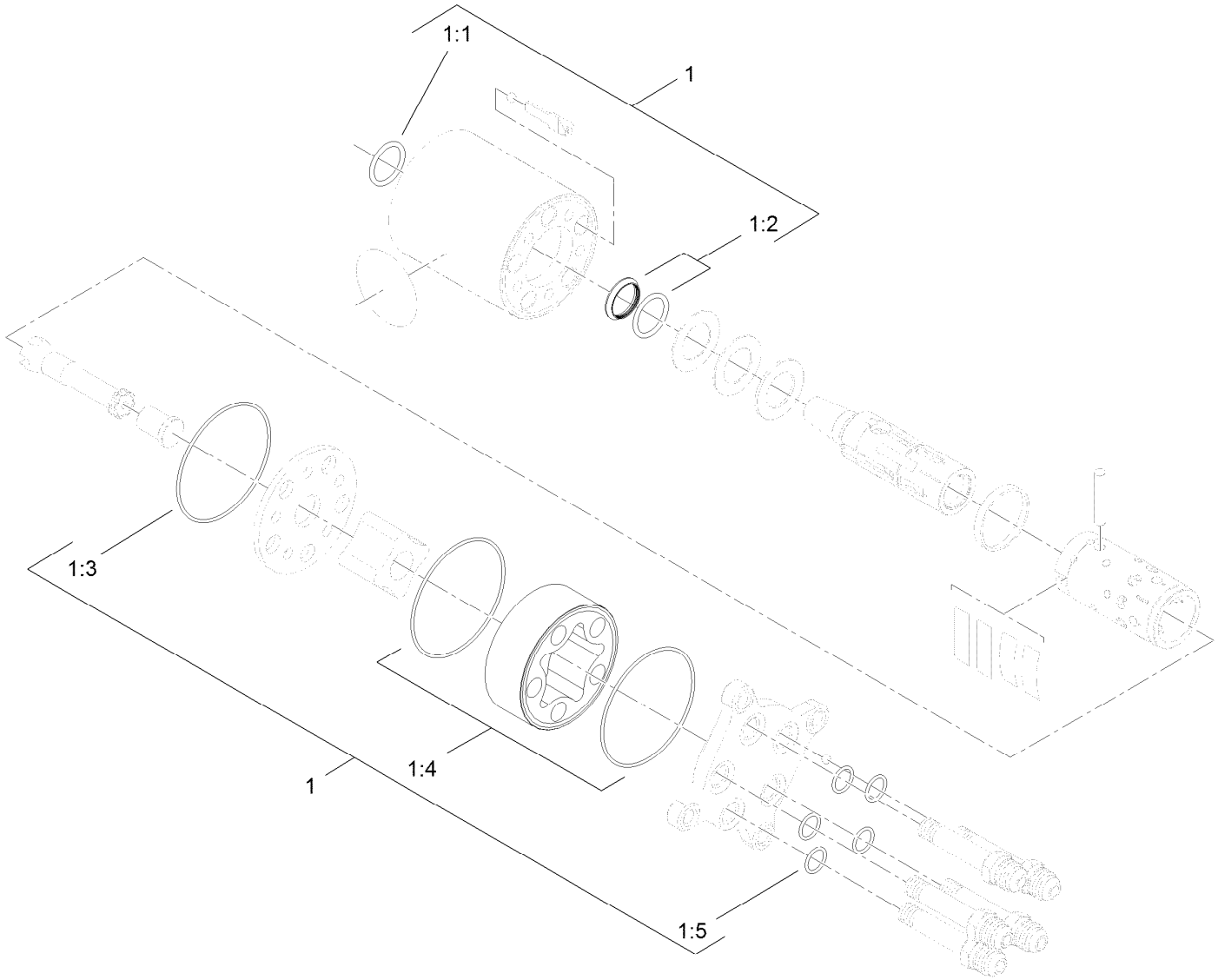


# Steering Valve Assembly No. 120-4813

| *Ref.* | *Part Number* | *Qty.* | *Description* |
|---|---|---|---|
| 1 | 106-6716 | 1 | Seal Kit |
| 1:1 | | 1 | Ring-Seal, Dust ● |
| 1:2 | | 1 | Seal-Shaft ● |
| 1:3 | | 1 | O-Ring ● |
| 1:4 | | 2 | O-Ring ● |
| 1:5 | | 5 | O-Ring ● |

● Not serviced separately

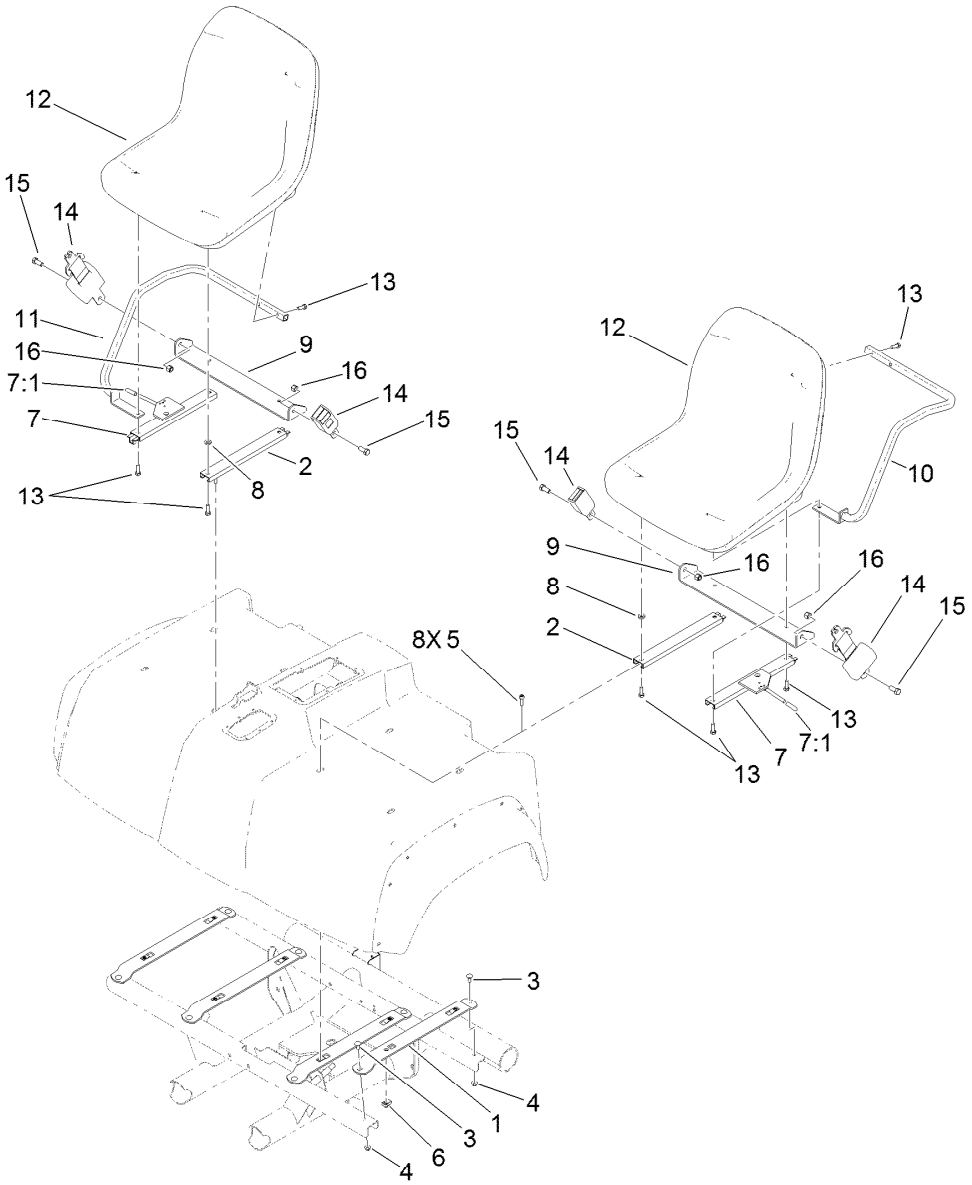


# Seat Assembly

| Ref. | Part Number | Qty. | Description |
|---|---|---|---|
| 1 | 115-2435-03 | 4 | Bracket-Seat |
| 2 | 119-0655 | 2 | Adjuster-Seat, Non Locking |
| 3 | 3230-1 | 8 | Bolt-CARR |
| 4 | 104-8300 | 8 | Nut-HF, NI |
| 5 | 3274-22 | 8 | Screw-HSH |
| 6 | 115-7721 | 8 | Nut-Clip, U |
| 7 | 121-9763 | 2 | Adjuster-Seat, Locking |
| 7:1 | 2410-49 | 1 | Cap-Vinyl |
| 8 | 104-7658 | 2 | Spacer |

| Ref. | Part Number | Qty. | Description |
|---|---|---|---|
| 9 | 119-0727-03 | 2 | Bracket-Belt, Seat |
| 10 | 119-0731-03 | 1 | Armrest-LH |
| 11 | 119-0732-03 | 1 | Armrest-RH |
| 12 | 133-0577 | 2 | Seat ASM |
| 13 | 33114-030 | 12 | Screw-HH |
| 14 | 110-0413 | 2 | Seatbelt-Retractable |
| 15 | 3212-4 | 4 | Screw-HH |
| 16 | 3296-7 | 4 | Nut-Lock |

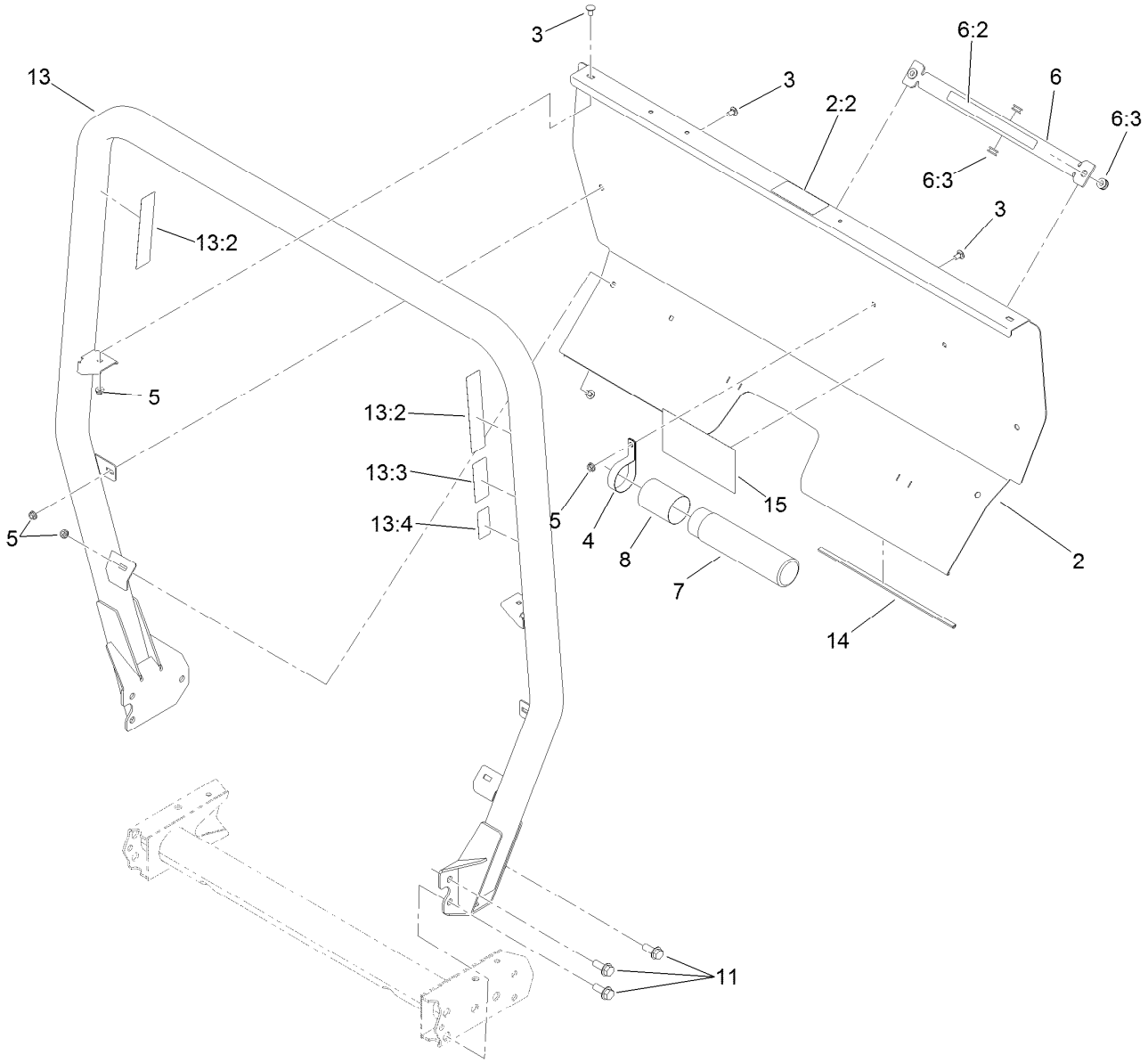


# Roll-Over Protection System Assembly

| Ref. | Part Number | Qty. | Description |
|---|---|---|---|
| 2 | 115-2213 | 1 | ROPS Cover ASM |
| 2:2 | 105-4215 | 1 | Decal-Caution |
| 3 | 3230-18 | 8 | Screw-CARR |
| 4 | 2412-133 | 2 | Clamp-R |
| 5 | 32128-20 | 8 | Nut-HF |
| 6 | 105-7960 | 1 | Bed Support ASM |
| 6:2 | 93-9852 | 1 | Decal-Warning |
| 6:3 | 92-5972 | 4 | Grommet-Rubber |
| 7 | 104-7050 | 1 | Tube-Manual |

| Ref. | Part Number | Qty. | Description |
|---|---|---|---|
| 8 | 104-7048 | 1 | Cap-Housing |
| 11 | 3234-38 | 6 | Screw-HHF |
| 13 | 115-7910 | 1 | ROPS ASM |
| 13:2 | 106-7767 | 2 | Decal-ROPS |
| 13:3 | 93-9850 | 1 | Decal-ROPS, CE |
| 13:4 | 117-4969 | 1 | Decal-ROPS, ISO |
| 14 | 127-7382 | 2 | Seal-ROPS |
| 15 | 115-7814 | 1 | Decal-Reference, Quick |

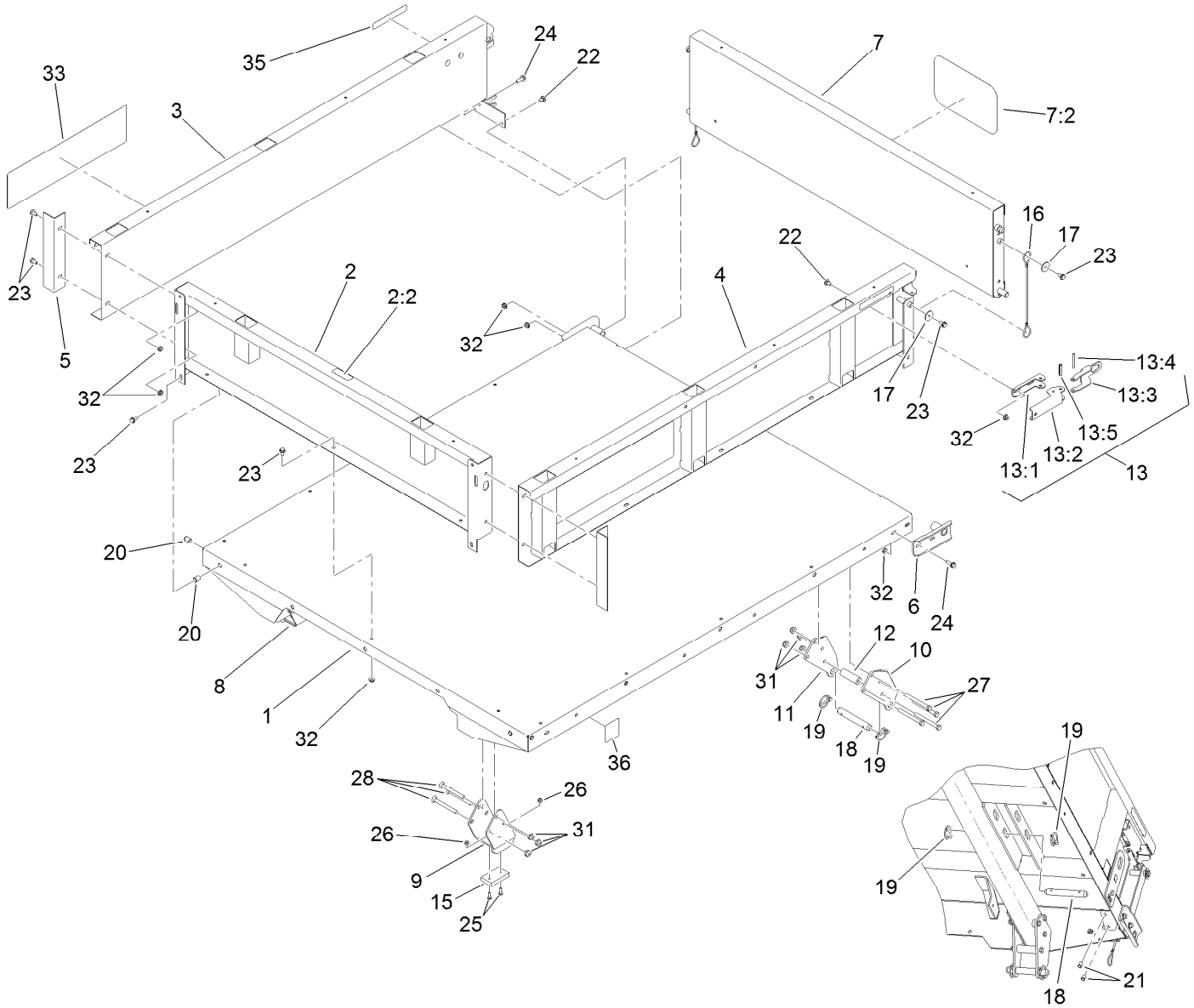


# Full Bed and Side Panel Assembly

| Ref. | Part Number | Qty. | Description |
|---|---|---|---|
| 1 | 93-9724-03 | 1 | Flatbed-Full |
| 2 | 133-0645 | 1 | Front Panel ASM |
| 2:2 | 115-7739 | 1 | Decal-No Riders |
| 3 | 133-0617 | 1 | Panel-Side, RH |
| 4 | 133-0616 | 1 | Panel-Side, LH |
| 5 | 92-1320-03 | 2 | Angle-Side |
| 6 | 92-1265-03 | 2 | Bracket-Pivot |
| 7 | 133-0644 | 1 | Tailgate |
| 7:2 | 105-4222 | 1 | Decal |
| 8 | 106-2423-03 | 1 | Bracket-Spacer, RH |
| 9 | 106-2422-03 | 1 | Bracket-Spacer, LH |
| 10 | 93-9720-03 | 2 | Bracket-Pivot, Long (LH) |
| 11 | 93-9721-03 | 2 | Bracket-Pivot, Long (RH) |
| 12 | 93-9575 | 2 | Tube-Pivot, Flatbed |
| 13 | 99-1123 | 2 | Latch ASM |
| 13:1 | 92-1271 | 1 | Pivot-Latch |
| 13:2 | 99-1113 | 1 | Handle-Latch |
| 13:3 | 99-1112 | 1 | Plate-Retainer |
| 13:4 | 32121-78 | 1 | Pin-Roll |
| 13:5 | 32121-25 | 1 | Pin-Roll |

| Ref. | Part Number | Qty. | Description |
|---|---|---|---|
| 15 | 93-9719 | 2 | Block-Wear |
| 16 | 93-9595 | 2 | Lanyard |
| 17 | 3256-57 | 4 | Washer-Flat |
| 18 | 92-1233 | 4 | Pin-Clevis |
| 19 | 92-1298 | 8 | Pin-Lynch |
| 20 | 32148-7 | 4 | Nut-Clinch |
| 21 | 32148-6 | 4 | Nut-Clinch |
| 22 | 3230-18 | 6 | Screw-CARR |
| 23 | 3234-7 | 21 | Screw-HHF |
| 24 | 3234-29 | 6 | Screw-HHF |
| 25 | 3250-45 | 4 | Screw-SPH |
| 26 | 3296-42 | 4 | Nut-Lock, NI |
| 27 | 323-42 | 8 | Screw-HH |
| 28 | 3231-24 | 6 | Screw-CARR |
| 31 | 3296-44 | 14 | Nut-Lock, NI |
| 32 | 32128-20 | 27 | Nut-HF |
| 33 | 115-7917 | 2 | Decal |
| 35 | 93-9868 | 2 | Decal-Caution |
| 36 | 93-9899 | 2 | Decal-Warning |

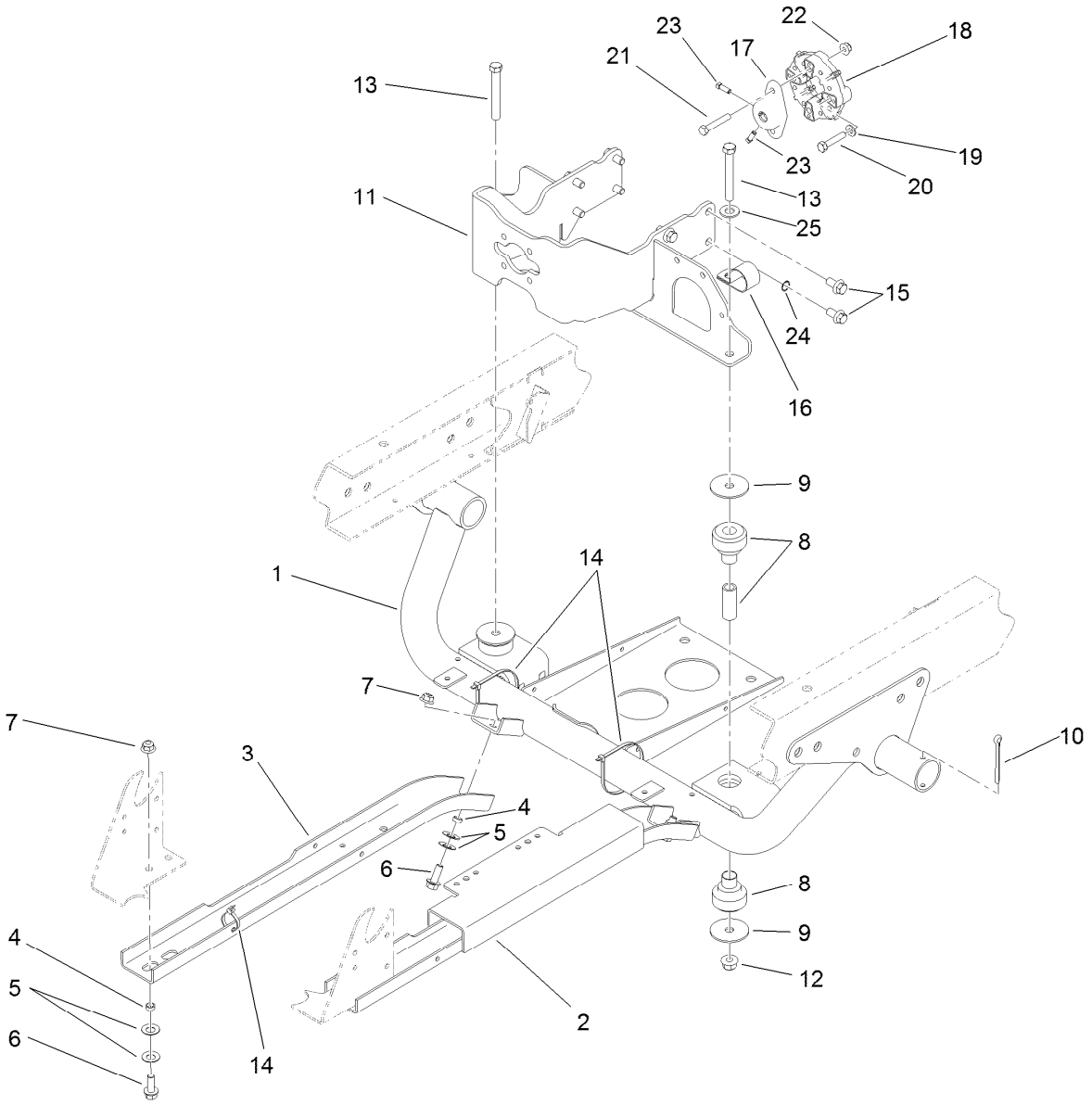


# Engine Sub Frame Assembly

| Ref. | Part Number | Qty. | Description |
|---|---|---|---|
| 1 | 119-9679-03 | 1 | Support-Engine |
| 2 | 115-2215-03 | 1 | Guard-LH |
| 3 | 87-4730-03 | 1 | Guard-Belly |
| 4 | 76-9100 | 6 | Spacer |
| 5 | 3290-413 | 12 | Washer-Belleville |
| 6 | 3234-11 | 6 | Screw-HHF |
| 7 | 104-8301 | 6 | Nut-HF, NI |
| 8 | 106-7865 | 2 | Mount-Engine |
| 9 | 87-5100 | 4 | Washer-Snubbing |
| 10 | 3272-37 | 2 | Pin-Cotter |
| 11 | 121-6259-03 | 1 | Mount-Pump, Engine |
| 12 | 114-8417 | 2 | Nut-HF, NI |
| 13 | 324-13 | 2 | Screw-HH |

| Ref. | Part Number | Qty. | Description |
|---|---|---|---|
| 14 | 3290-379 | 4 | Tie-Cable |
| 15 | 120-4839 | 8 | Screw-HHF |
| 16 | 2412-82 | 1 | Clamp-R |
| 17 | 115-2169 | 1 | Hub-Pump |
| 18 | 119-0652 | 1 | Coupler-Rubber |
| 19 | 3256-23 | 2 | Washer-Plain |
| 20 | 33114-040 | 2 | Screw-HH |
| 21 | 322-21 | 2 | Screw-HH |
| 22 | 104-8300 | 2 | Nut-HF, NI |
| 23 | 3241-6 | 2 | Screw-SQH |
| 24 | 3254-20 | 1 | Washer-Lock, Int |
| 25 | 3256-26 | 1 | Washer-Flat |

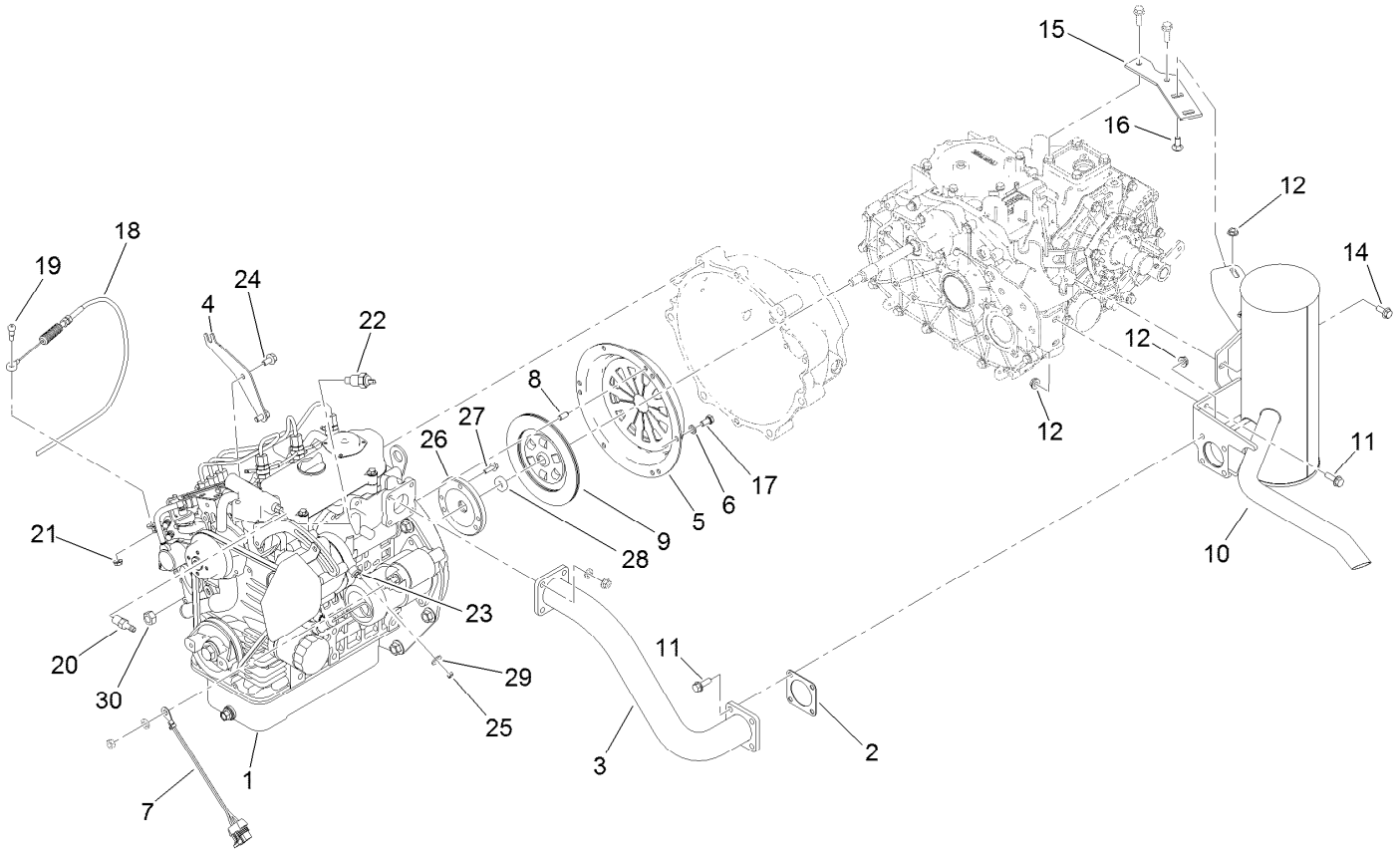


# Engine Assembly

| Ref. | Part Number | Qty. | Description |
|---|---|---|---|
| 1 | 138-6904 | 1 | Engine-Kubota, D902 |
| 2 | 105-4209 | 1 | Gasket-Muffler |
| 3 | 119-0860 | 1 | Tube-Exhaust |
| 4 | 120-4981-03 | 1 | Mount-Cable, Throttle |
| 5 | 87-4690 | 1 | Cover-Clutch |
| 6 | 3253-4 | 6 | Washer-Lock |
| 7 | 99-3441 | 1 | Harness-Wire, Fusible Link |
| 8 | 42-7160 | 3 | Pin |
| 9 | 87-4700 | 1 | Disc-Clutch |
| 10 | 133-0613 | 1 | Muffler |
| 11 | 3234-17 | 6 | Screw-HHF |
| 12 | 32128-20 | 8 | Nut-HF |
| 14 | 98-7977 | 1 | Screw-HHF |
| 15 | 105-9472 | 1 | Plate-Mount, Muffler |
| 16 | 3230-2 | 2 | Bolt-CARR |

| Ref. | Part Number | Qty. | Description |
|---|---|---|---|
| 17 | 33114-016 | 6 | Screw-HH |
| 18 | 120-4980 | 1 | Cable-Throttle |
| 19 | 119-4881 | 1 | Bolt-Shoulder |
| 20 | 115-1448 | 1 | Fitting-Straight |
| 21 | 32128-33 | 1 | Nut-HF |
| 22 | 120-4907 | 1 | Sensor-Temperature |
| 23 | 120-5075 | 1 | Sender-Temperature |
| 24 | 33104-016 | 2 | Screw-HHF |
| 25 | 33013-00 | 1 | Nut-Hex |
| 26 | 120-5006 | 1 | Holder-Bearing, Pilot |
| 27 | 33103-020 | 3 | Screw-HHF |
| 28 | 115-6870 | 1 | Bearing-Ball, Sealed |
| 29 | 3256-2 | 1 | Washer-Flat |
| 30 | 110-8815 | 1 | Nut-Hex |

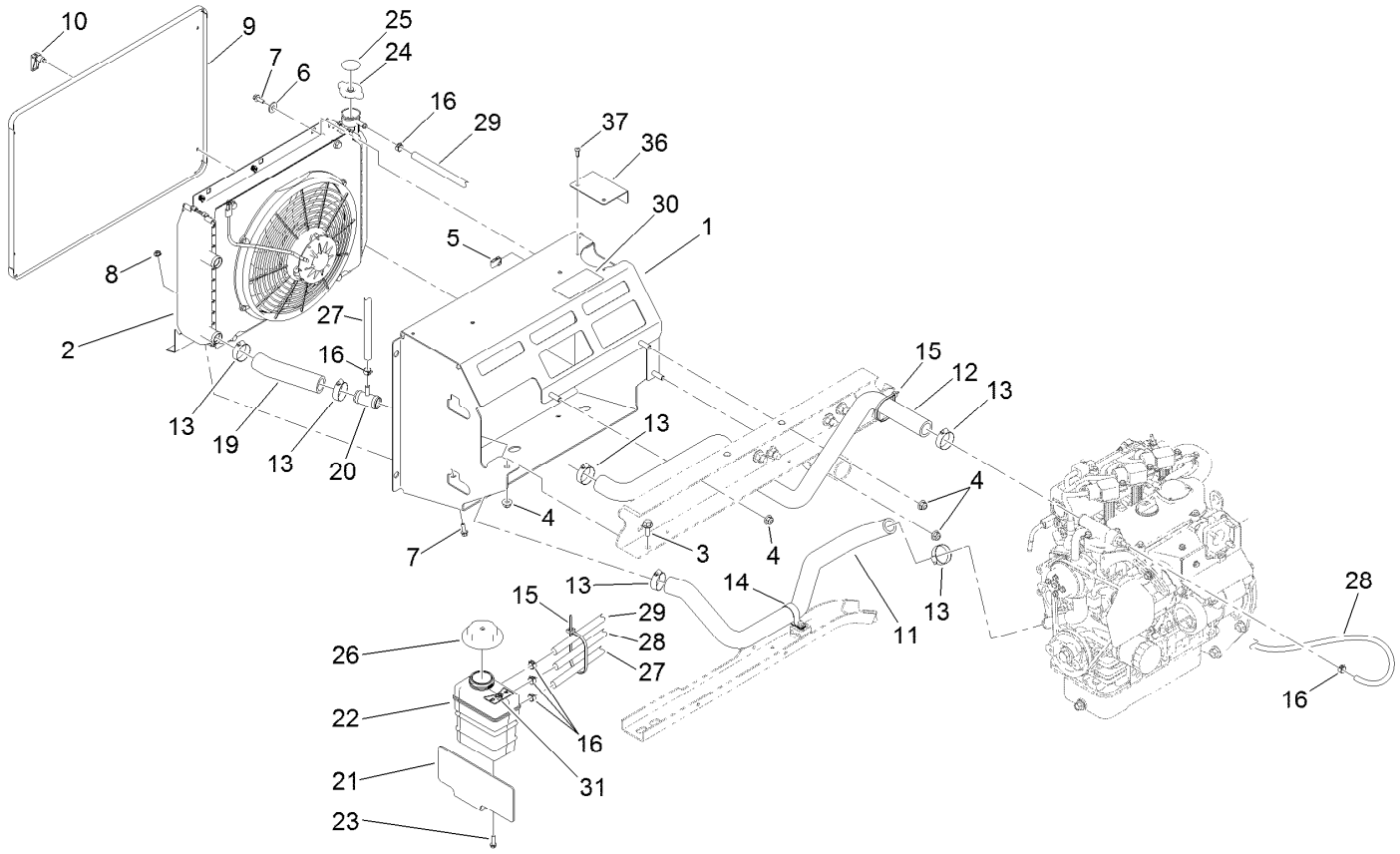


# Cooling System Assembly

| Ref. | Part Number | Qty. | Description |
|---|---|---|---|
| 1 | 115-2434 | 1 | Mount-Radiator |
| 2 | | 1 | Radiator ASM ● |
| 3 | 3234-11 | 1 | Screw-HHF |
| 4 | 104-8301 | 4 | Nut-HF, NI |
| 5 | 107069 | 2 | Clip |
| 6 | 3256-3 | 2 | Washer-Flat |
| 7 | 3234-4 | 4 | Screw-HHF |
| 8 | 32128-33 | 2 | Nut-HF |
| 9 | 115-2428-03 | 1 | Screen-Radiator |
| 10 | 74-5950 | 4 | Latch-Swell |
| 11 | 119-9487 | 1 | Hose-Coolant, Lower |
| 12 | 119-9486 | 1 | Hose-Coolant, Upper |
| 13 | 2412-34 | 6 | Clamp-Hose |
| 14 | 2412-74 | 1 | R-Clamp |
| 15 | 3290-379 | 4 | Tie-Cable |
| 16 | 92-2379 | 6 | Clamp-Hose |

| Ref. | Part Number | Qty. | Description |
|---|---|---|---|
| 19 | 120-4905 | 1 | Hose-Coolant, Lower |
| 20 | 120-4851 | 1 | Tee |
| 21 | 120-4906-03 | 1 | Plate-Mount, Tank |
| 22 | 120-4856 | 1 | Tank-Surge |
| 23 | 46-8091 | 2 | Screw-HWH |
| 24 | 120-4866 | 1 | Cap-System, Cooling |
| 25 | 106-6755 | 1 | Decal-Cap, Radiator |
| 26 | 120-4867 | 1 | Cap-Coolant, Threaded (15 PSI) |
| 27 | 120-5019 | 1 | Hose-Coolant |
| 28 | 120-5020 | 1 | Hose-Coolant |
| 29 | 120-5021 | 1 | Hose-Coolant |
| 30 | 121-6286 | 1 | Decal-Fill, Radiator |
| 31 | 121-6287 | 1 | Decal-Tank, Overflow |
| 36 | 136-6288 | 1 | Cover-Cap, Radiator |
| 37 | 63-8590 | 2 | Screw |

● Not serviced separately

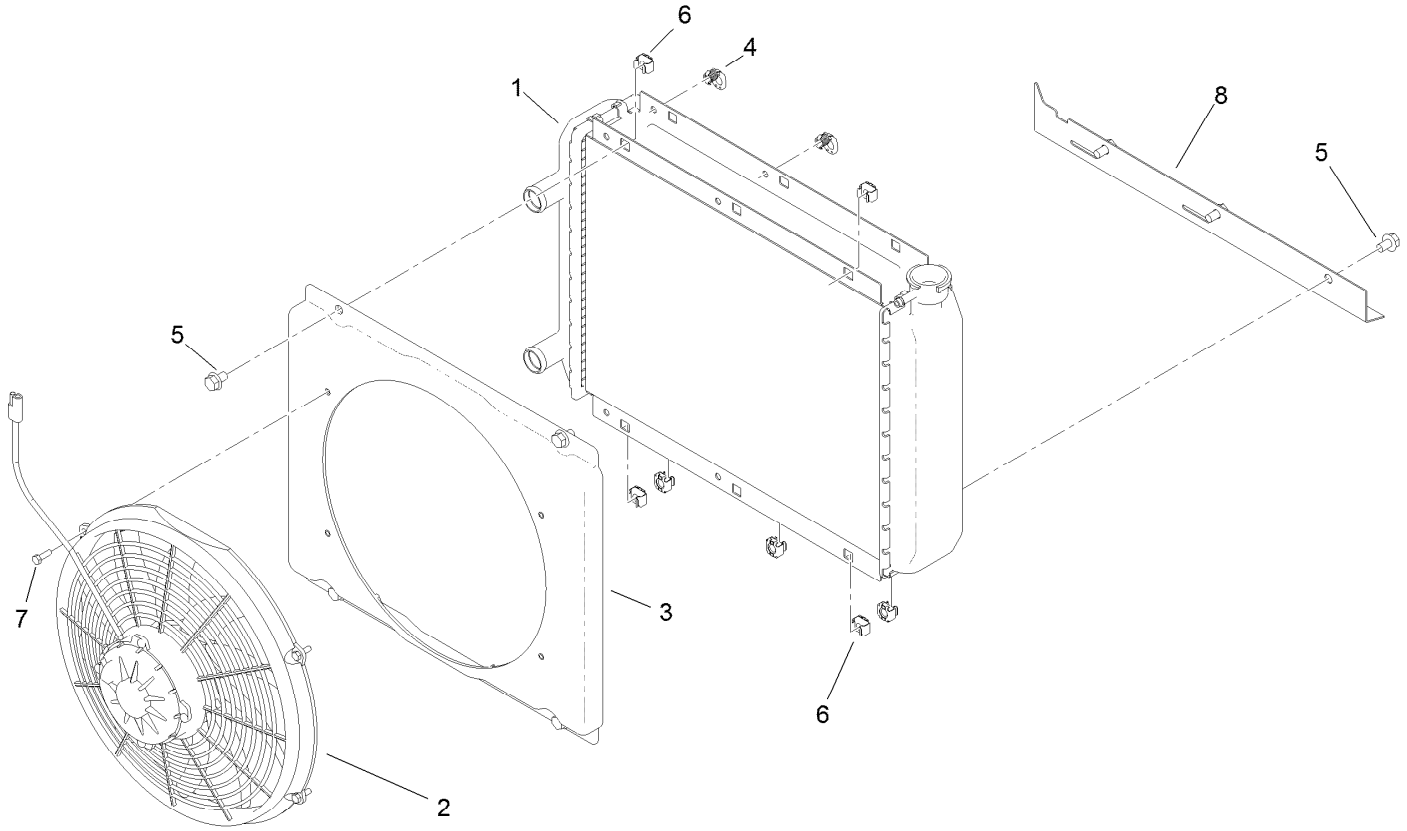


# Radiator Assembly

| Ref. | Part Number | Qty. | Description |
|---|---|---|---|
| 1 | 114-8384 | 1 | Radiator |
| 2 | 114-8385 | 1 | Fan-Electric |
| 3 | 114-8386 | 1 | Shroud |
| 4 | 114-8387 | 2 | Latch-Spring |
| 5 | 3234-30 | 7 | Screw-HHF |
| 6 | 703856 | 7 | Nut-Sq, Caged |
| 7 | 60-6910 | 4 | Screw-HH |
| 8 | 115-7765 | 1 | Plate-Mount, Lower |

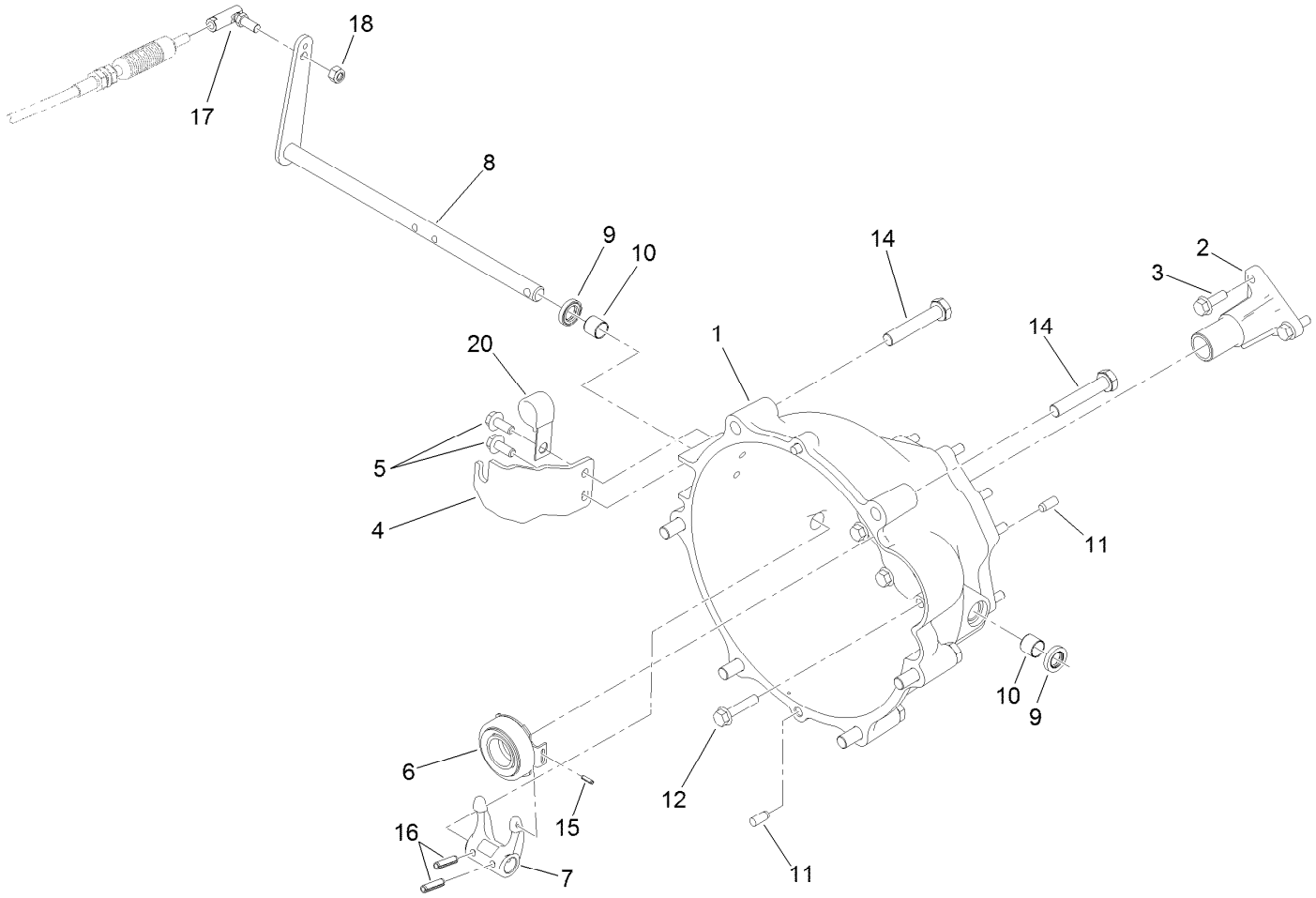


# Clutch Linkage Assembly

| Ref. | Part Number | Qty. | Description |
|---|---|---|---|
| 1 | 119-9498 | 1 | Bell Housing |
| 2 | 120-4886 | 1 | Guide-Release |
| 3 | 33104-025 | 3 | Screw-HHF |
| 4 | 115-2313 | 1 | Bracket-Cable, Clutch |
| 5 | 98-7977 | 2 | Screw-HHF |
| 6 | 110-2538 | 1 | Bearing-Release, Clutch |
| 7 | 87-5300 | 1 | Fork-Clutch |
| 8 | 115-2311 | 1 | Lever-Clutch |
| 9 | 87-1920 | 2 | Seal-Oil |

| Ref. | Part Number | Qty. | Description |
|---|---|---|---|
| 10 | 87-3770 | 2 | Bushing-Housing, Bell |
| 11 | 87-1910 | 4 | Pin-Dowel |
| 12 | 33104-040 | 9 | Screw-HHF |
| 14 | 107-7983 | 6 | Screw-HH |
| 15 | 32121-7 | 1 | Pin-Roll, Slotted |
| 16 | 32121-24 | 2 | Pin-Spring |
| 17 | 2411-33 | 1 | Balljoint-RH (W/Grommet) |
| 18 | 3296-4 | 1 | Nut-Lock |
| 20 | 120-5018 | 1 | Clip-Open J, Coated |

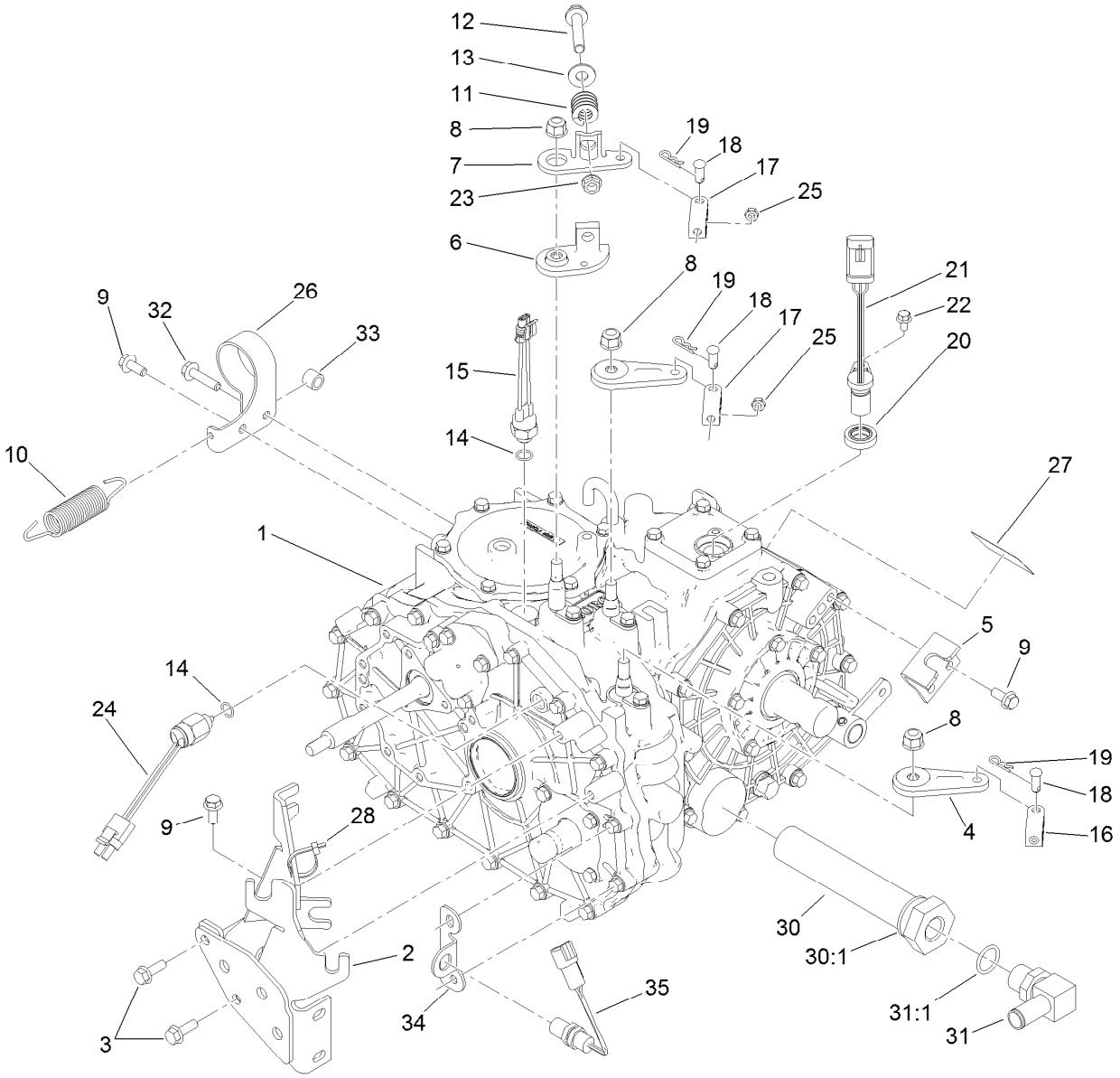


# Transaxle Assembly

| Ref. | Part Number | Qty. | Description |
|---|---|---|---|
| 1 | 115-2175 | 1 | 4 Wheel Drive Transaxle ASM |
| 2 | 105-4207-03 | 1 | Mount-Cable |
| 3 | 33104-025 | 2 | Screw-HHF |
| 4 | 132-6764 | 2 | Lever-Shift |
| 5 | 87-4470 | 1 | Bracket-Lock, Differential |
| 6 | 87-7970 | 1 | Arm-Shift |
| 7 | 87-8250 | 1 | Plate-Arm, Shift |
| 8 | 103-9511 | 3 | Nut-Lock, NI |
| 9 | 98-7977 | 4 | Screw-HHF |
| 10 | 68-9950 | 1 | Spring-Traction |
| 11 | 87-6910 | 1 | Spring-Compression |
| 12 | 66-9302 | 1 | Screw-HHF, Whiz |
| 13 | 3256-4 | 1 | Washer-Flat |
| 14 | 237-30 | 2 | O-Ring |
| 15 | 72-4310 | 1 | Switch-Ball |
| 16 | 87-7160 | 1 | Clevis-Cable |
| 17 | 87-2310 | 2 | Clevis-Cable |
| 18 | 283-62 | 3 | Pin-Clevis |
| 19 | 3290-307 | 3 | Pin-Cotter |
| 20 | 92-3735 | 1 | Seal-Sensor, Oil |
| 21 | 120-4800 | 1 | Sensor-Geartooth |
| 22 | 33103-012 | 1 | Screw-HHF |
| 23 | 3290-357 | 1 | Nut-HHF, Whiz |
| 24 | 87-6710 | 1 | Switch-Transmission |
| 25 | 3220-1 | 2 | Nut-Jam |
| 26 | 131-6695 | 1 | Bracket-Pump, Fuel |
| 27 | 115-7741 | 1 | Decal-Oil, Transmission |
| 28 | 3290-379 | 1 | Tie-Cable |
| 30 | 87-3990 | 1 | Strainer-Transaxle |
| 30:1 | 237-123 | 1 | O-Ring |
| 31 | 353-987 | 1 | Fitting-Elbow, 90 |
| 31:1 | 237-81 | 1 | O-Ring |
| 32 | 132-0797 | 1 | Screw-HHF |
| 33 | 93-9847 | 1 | Spacer |
| 34 | 136-6277 | 1 | Bracket-Sensor, 4Wd |
| 35 | 136-6349 | 1 | Sensor |

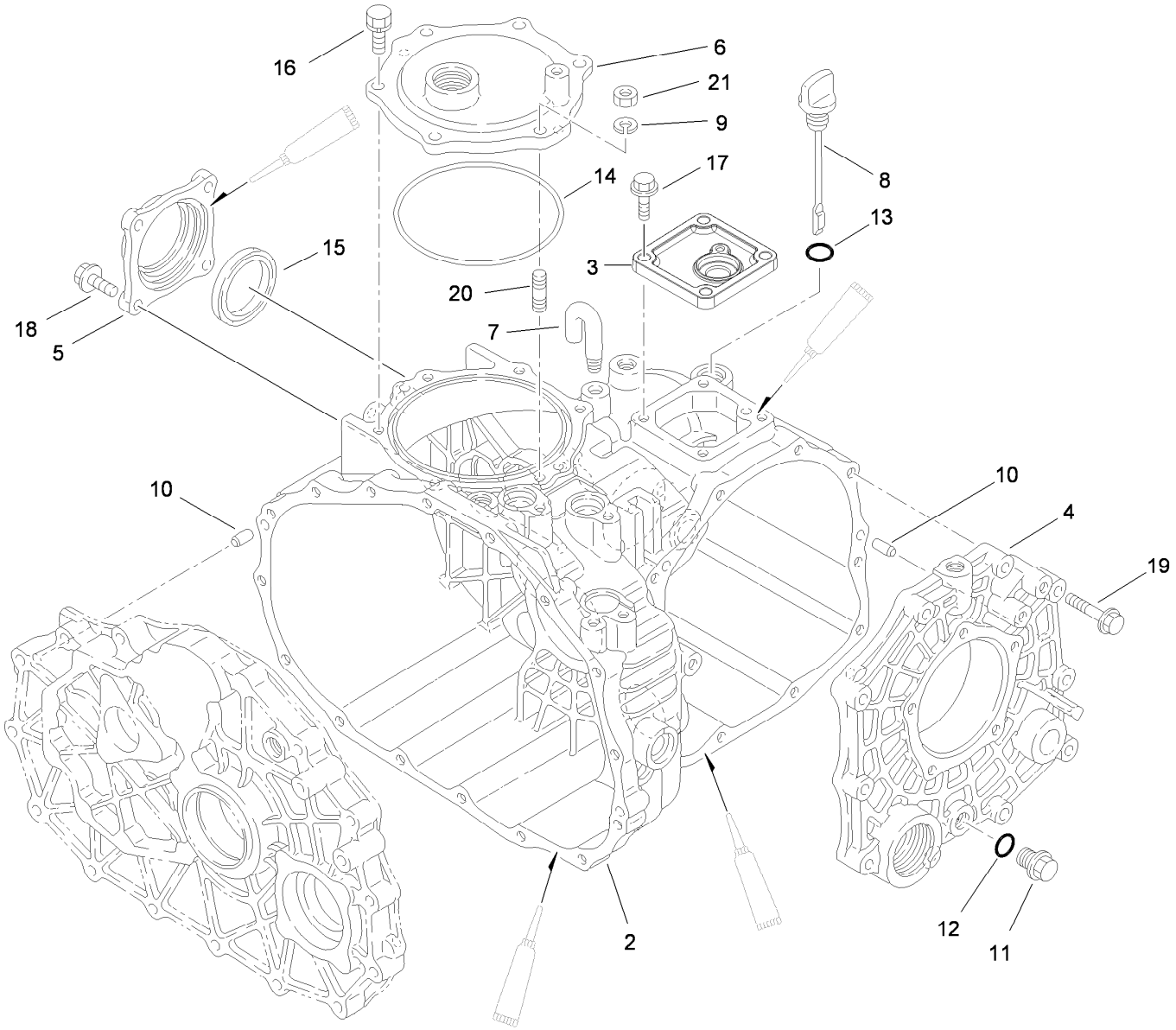


# Case Assembly
# 4 Wheel Drive Transaxle Assembly No. 115-2175

| Ref. | Part Number | Qty. | Description |
|---|---|---|---|
| 2 | 92-0651 | 1 | Case-Transmission |
| 3 | 92-0810 | 1 | Cover-Upper, Sensor |
| 4 | 92-0653 | 1 | Cover-Side |
| 5 | 92-0655 | 1 | Cover-Seal, Axle |
| 6 | 92-0656 | 1 | Cover-Upper, PTO |
| 7 | 92-0743 | 1 | Breather-Air |
| 8 | 92-0662 | 1 | Cap-Oil |
| 9 | 92-0762 | 1 | Washer-Spring |
| 10 | 92-0765 | 4 | Pin-Parallel |
| 11 | 92-0773 | 1 | Plug-Drain |

| Ref. | Part Number | Qty. | Description |
|---|---|---|---|
| 12 | 92-0787 | 1 | O-Ring |
| 13 | 92-0788 | 1 | O-Ring |
| 14 | 92-0790 | 1 | O-Ring |
| 15 | 92-0793 | 1 | Seal-Oil |
| 16 | 92-0796 | 5 | Bolt |
| 17 | 33104-025 | 4 | Screw-HHF |
| 18 | 33104-025 | 4 | Screw-HHF |
| 19 | 33104-040 | 10 | Screw-HHF |
| 20 | 92-0805 | 1 | Bolt 8X20 |
| 21 | 68-9400 | 1 | Nut-Flange [f/W Engine] |

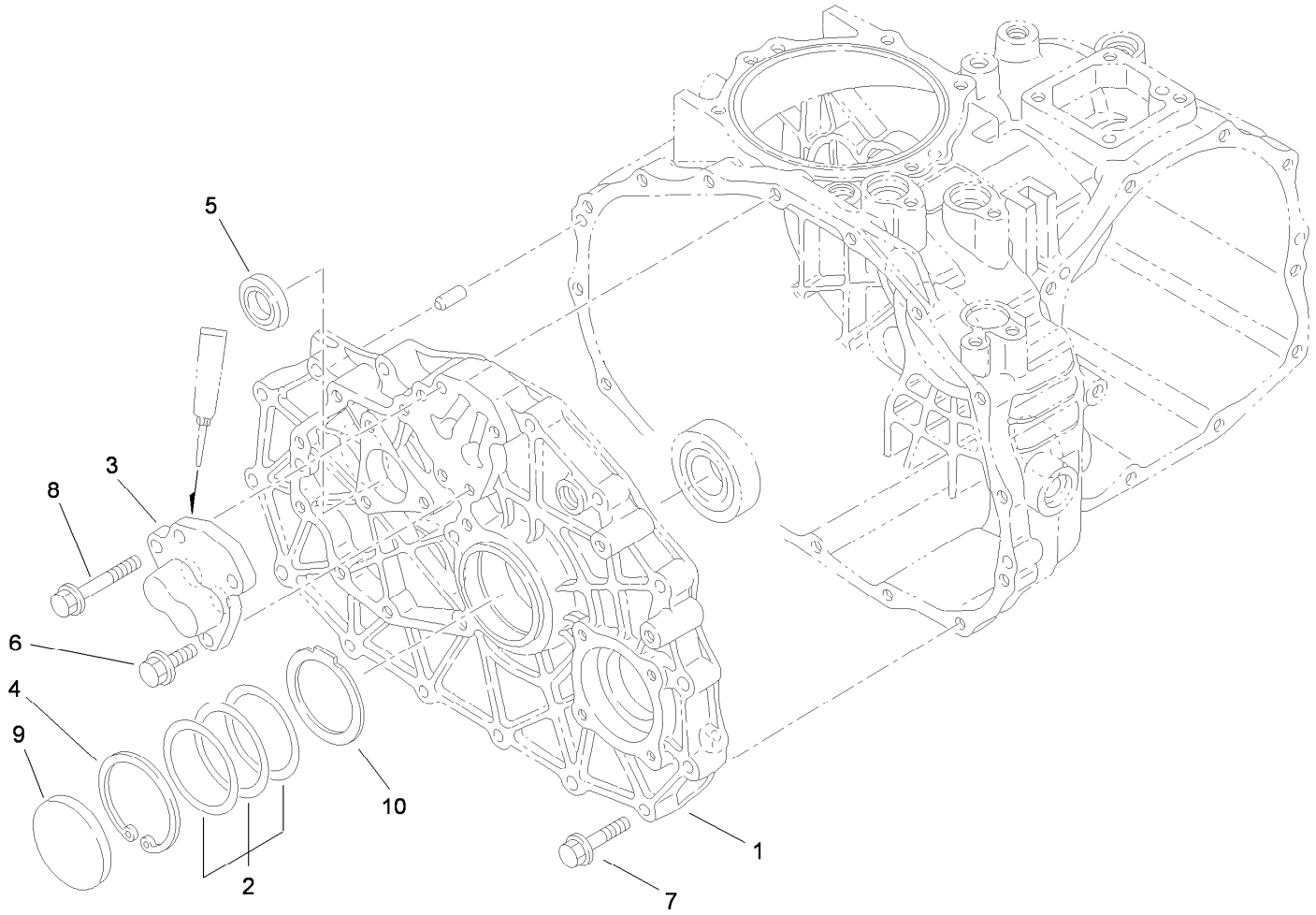


# Center Plate Assembly
# 4 Wheel Drive Transaxle Assembly No. 115-2175

| *Ref.* | *Part Number* | *Qty.* | *Description* |
|---|---|---|---|
| 1 | 100-4462 | 1 | Plate-Center, 4Wd |
| 2 | 100-4460 | 1 | Shim-Set |
| 3 | 92-0706 | 1 | Shaft-Fork |
| 4 | 92-0759 | 1 | Ring-Snap |
| 5 | 92-0791 | 1 | Seal-Oil |
| 6 | 33104-025 | 3 | Screw-HHF |
| 7 | 33104-040 | 15 | Screw-HHF |
| 8 | 33104-050 | 1 | Screw-HHF |
| 9 | 92-0807 | 1 | Cap-Sealing |
| 10 | 100-4465 | 1 | Shim (W/Tab) |

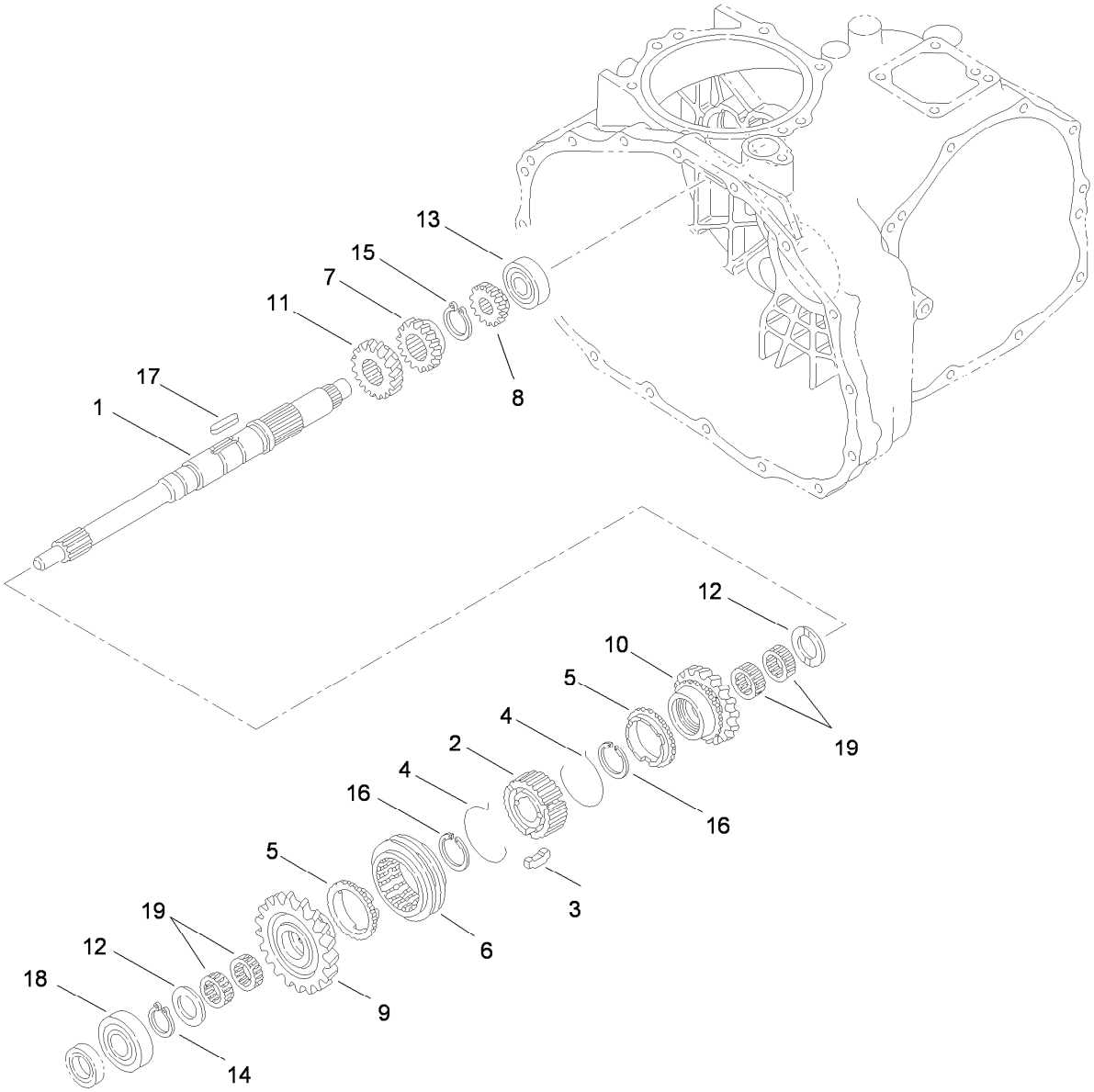


# Main Shaft Assembly
# 4 Wheel Drive Transaxle Assembly No. 115-2175

| Ref. | Part Number | Qty. | Description |
|---|---|---|---|
| 1 | 92-0663 | 1 | Shaft-Main |
| 2 | 92-0664 | 1 | Hub-Synchro |
| 3 | 92-0665 | 3 | Key-Synchro |
| 4 | 92-0666 | 2 | Spring-Synchro |
| 5 | 92-0667 | 2 | Ring-Synchro |
| 6 | 92-0668 | 1 | Shifter-Synchro |
| 7 | 92-0672 | 1 | Gear-Main, 18 Tooth |
| 8 | 92-0673 | 1 | Gear-Main, 14 Tooth |
| 9 | 110-2521 | 1 | Gear-Main, 27 Tooth |
| 10 | 110-2522 | 1 | Gear- Main, 24 Tooth |

| Ref. | Part Number | Qty. | Description |
|---|---|---|---|
| 11 | 92-0687 | 1 | Gear-Main, 16 Tooth |
| 12 | 92-0740 | 2 | Washer-Thrust |
| 13 | 92-0650 | 1 | Bearing |
| 14 | 92-0753 | 1 | Ring-Snap |
| 15 | 92-0754 | 1 | Ring-Snap |
| 16 | 92-0763 | 2 | Ring-Snap |
| 17 | 92-0772 | 1 | Key |
| 18 | 251-8 | 1 | Bearing-Ball |
| 19 | 92-0781 | 4 | Bearing-Needle |

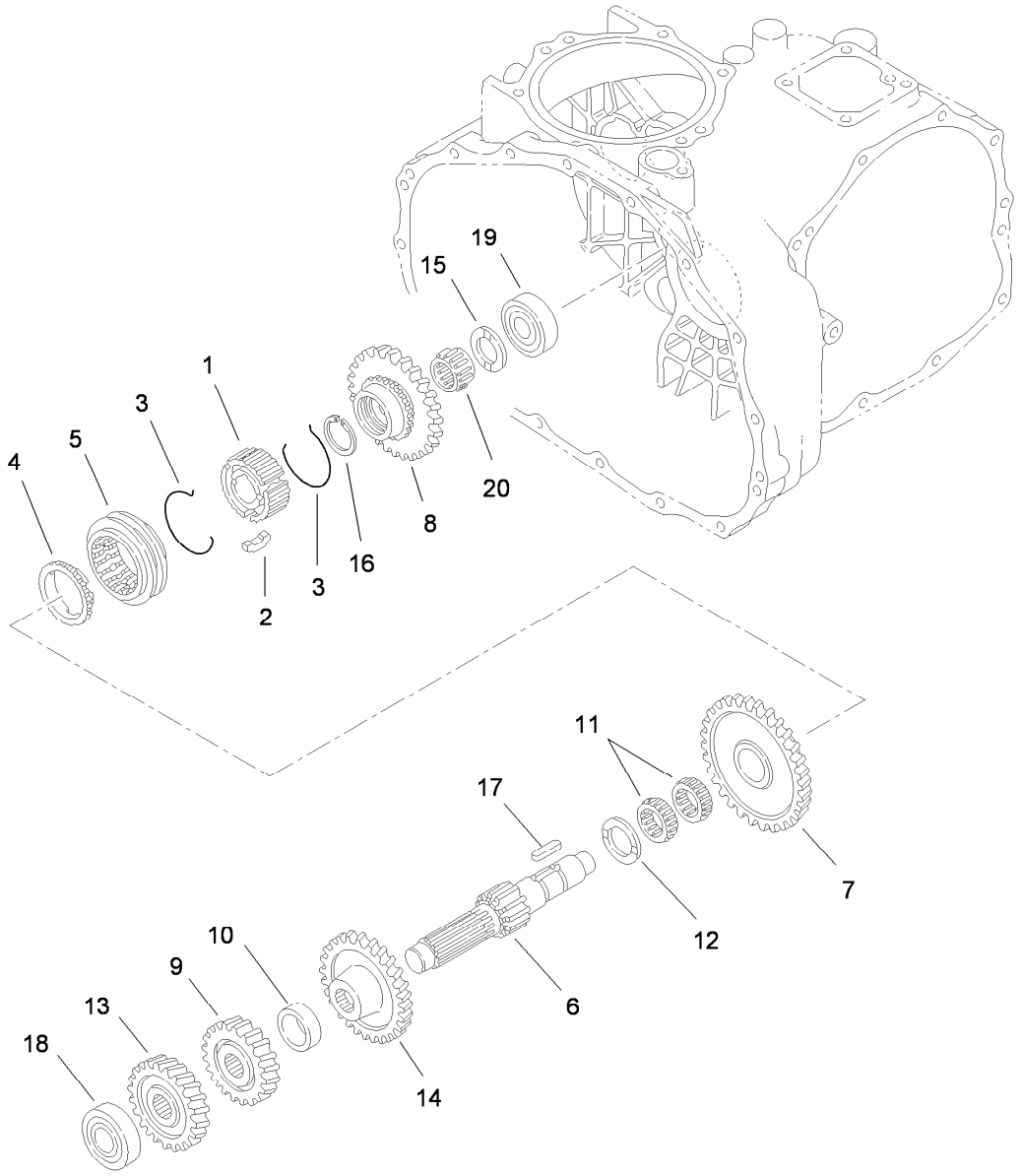


# Reduction Shaft Assembly
# 4 Wheel Drive Transaxle Assembly No. 115-2175

| Ref. | Part Number | Qty. | Description |
|---|---|---|---|
| 1 | 92-0664 | 1 | Hub-Synchro |
| 2 | 92-0665 | 3 | Key-Synchro |
| 3 | 92-0666 | 2 | Spring-Synchro |
| 4 | 92-0667 | 1 | Ring-Synchro |
| 5 | 92-0668 | 1 | Shifter-Synchro |
| 6 | 92-0674 | 1 | Shaft-Reduction |
| 7 | 110-2524 | 1 | Gear- Reduction, 49 Tooth |
| 8 | 92-0819 | 1 | Gear-Reduction, 40 Tooth |
| 9 | 92-0769 | 1 | Pin-Roll |
| 10 | 92-0680 | 1 | Collar |

| Ref. | Part Number | Qty. | Description |
|---|---|---|---|
| 11 | 92-0681 | 2 | Bearing-Needle |
| 12 | 92-0682 | 1 | Washer-Thrust |
| 13 | 92-0822 | 1 | Gear-Reduction, 28 Tooth |
| 14 | 92-0823 | 1 | Gear-Reduction, 43 Tooth |
| 15 | 92-0740 | 1 | Washer-Thrust |
| 16 | 92-0673 | 1 | Gear-Main, 14 Tooth |
| 17 | 92-0772 | 1 | Key |
| 18 | 105-7985 | 1 | Bearing |
| 19 | 92-0778 | 1 | Bearing |
| 20 | 92-0782 | 1 | Bearing-Needle |

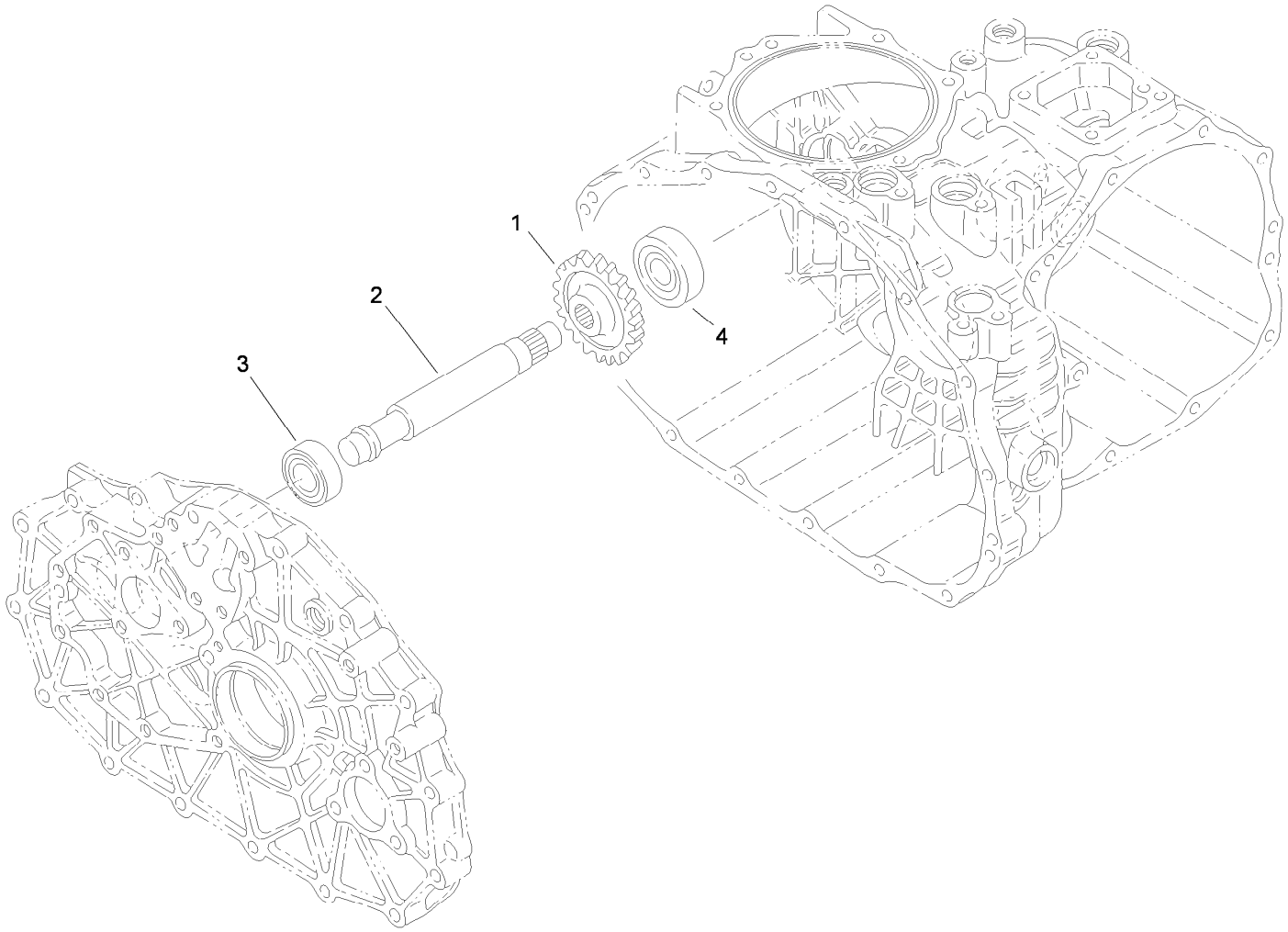


# Reverse Shaft Assembly
# 4 Wheel Drive Transaxle Assembly No. 115-2175

| *Ref.* | *Part Number* | *Qty.* | *Description* |
|---|---|---|---|
| 1 | 92-0684 | 1 | Gear-Reverse, 33 Tooth |
| 2 | 92-0824 | 1 | Shaft-Idler, Reverse |
| 3 | 251-346 | 1 | Bearing-Ball |
| 4 | 92-0778 | 1 | Bearing |

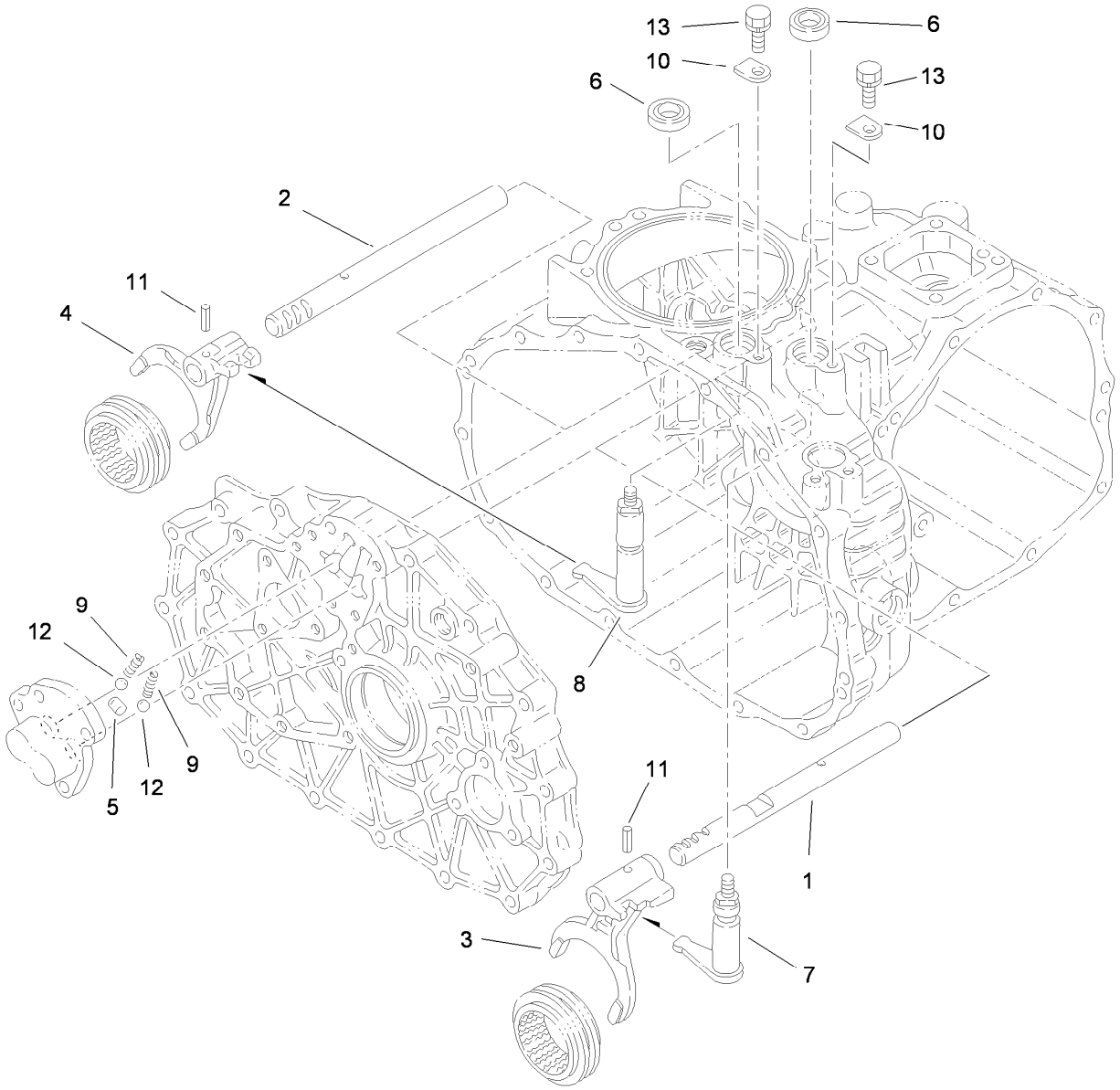


# Main Shift Assembly
# 4 Wheel Drive Transaxle Assembly No. 115-2175

| *Ref.* | *Part Number* | *Qty.* | *Description* |
|---|---|---|---|
| 1 | 92-0698 | 1 | Shaft-Fork |
| 2 | 92-0699 | 1 | Shaft-Fork |
| 3 | 92-0700 | 1 | Fork-Shift |
| 4 | 92-0701 | 1 | Fork-Shift |
| 5 | 92-0705 | 1 | Lock-Spindle |
| 6 | 92-0729 | 2 | Seal-Oil |
| 7 | 92-0816 | 1 | Arm-Shift |
| 8 | 92-0817 | 1 | Arm-Shift |
| 9 | 92-0731 | 2 | Spring |
| 10 | 92-0732 | 2 | Plate-Keeper |
| 11 | 92-0769 | 2 | Pin-Roll |
| 12 | 92-0785 | 2 | Ball-Steel |
| 13 | 33104-016 | 2 | Screw-HHF |

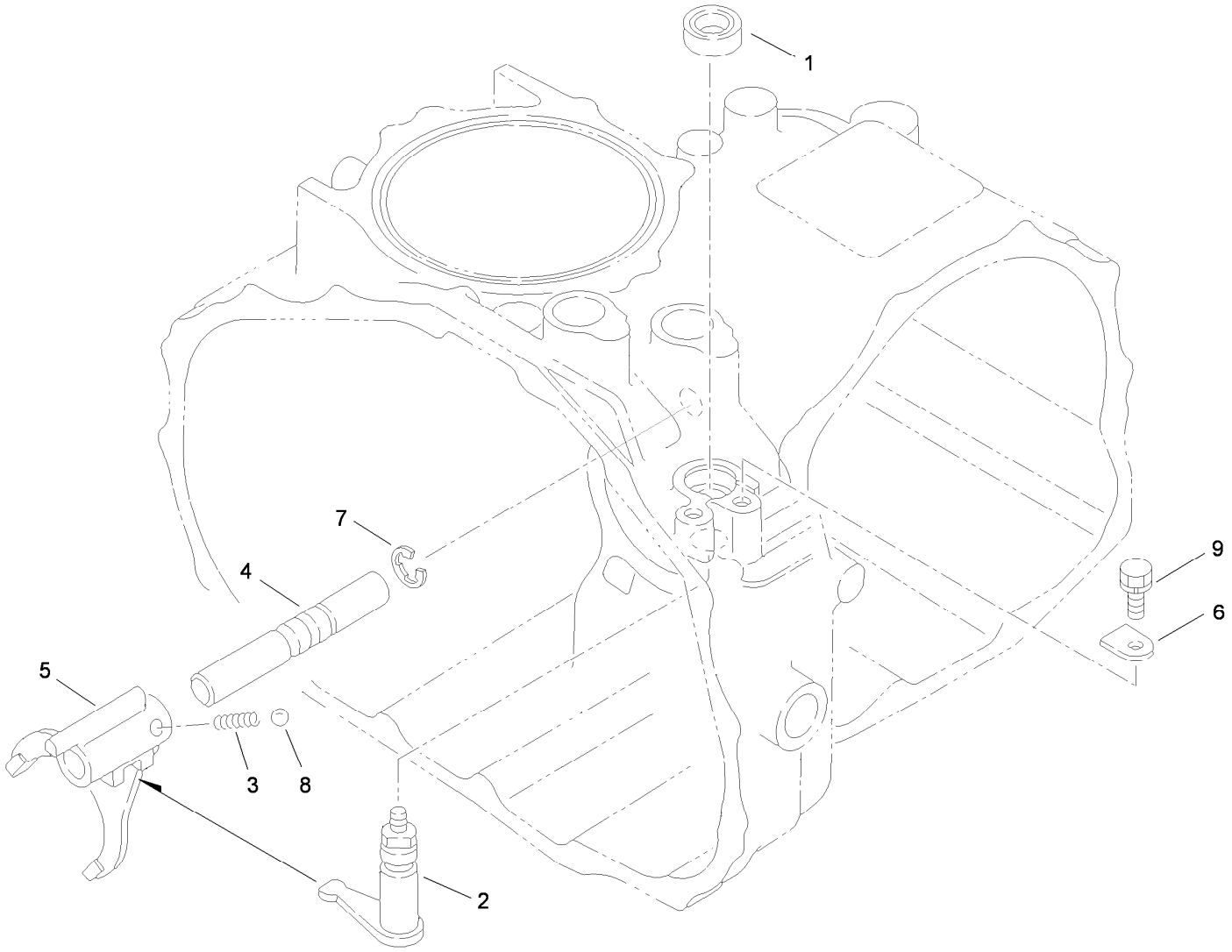


# Hi-Lo Shift Assembly
# 4 Wheel Drive Transaxle Assembly No. 115-2175

| *Ref.* | *Part Number* | *Qty.* | *Description* |
|---|---|---|---|
| 1 | 92-0729 | 1 | Seal-Oil |
| 2 | 92-0818 | 1 | Arm-Shift |
| 3 | 92-0731 | 1 | Spring |
| 4 | 92-0708 | 1 | Shaft-Fork |
| 5 | 92-0709 | 1 | Fork-Shift |
| 6 | 92-0732 | 1 | Plate-Keeper |
| 7 | 92-0761 | 1 | Ring-E |
| 8 | 92-0785 | 1 | Ball-Steel |
| 9 | 33104-016 | 1 | Screw-HHF |

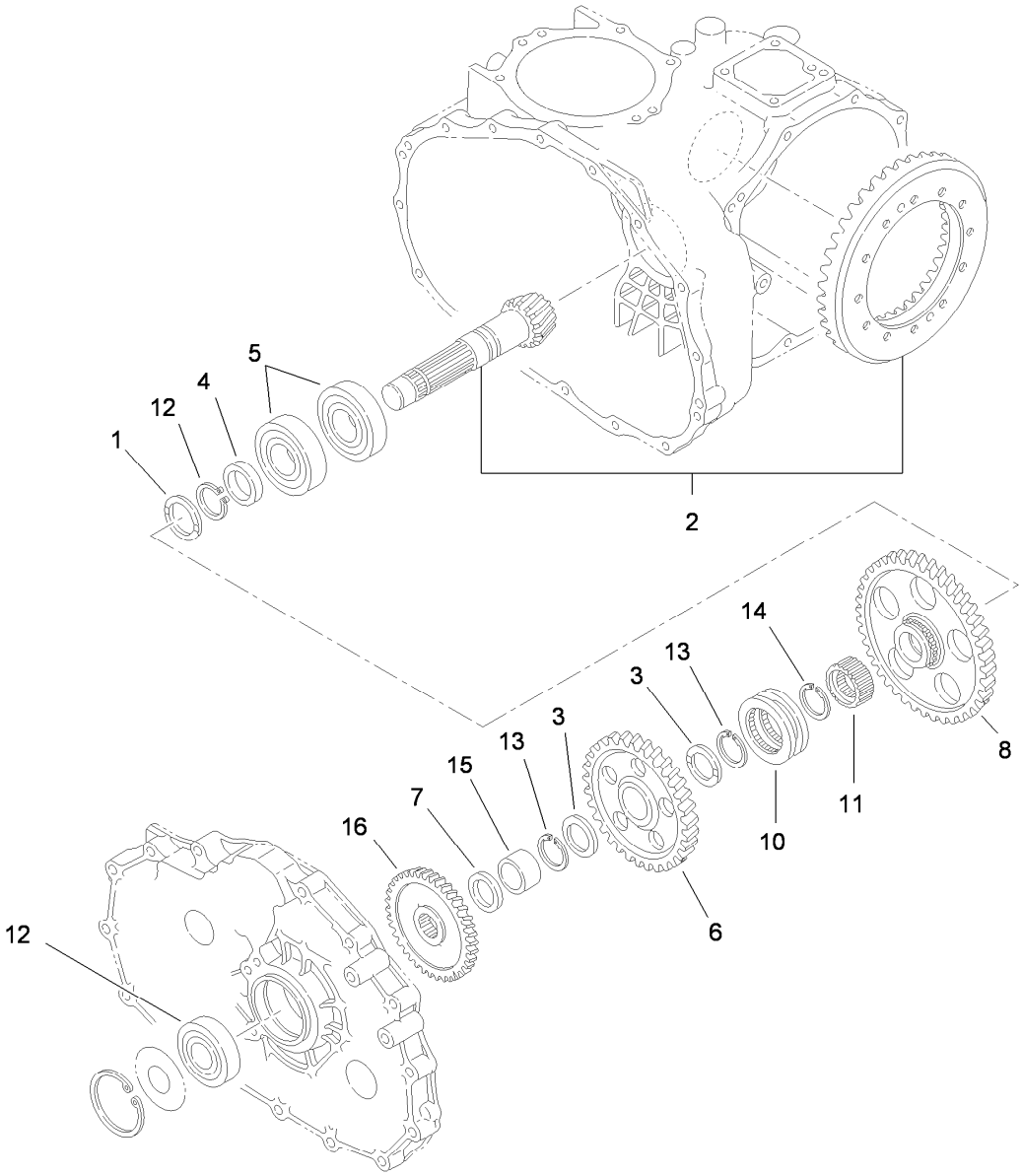


# Countershaft Assembly
# 4 Wheel Drive Transaxle Assembly No. 115-2175

| *Ref.* | *Part Number* | *Qty.* | *Description* |
|---|---|---|---|
| 1 | 92-0741 | 1 | Washer-Thrust |
| 2 | 105-7983 | 1 | Countershaft And Ring Gear ASM |
| 3 | 92-0711 | 2 | Washer-Thrust |
| 4 | 92-0713 | 1 | Collar |
| 5 | 92-0714 | 2 | Bearing |
| 6 | 92-0715 | 1 | Gear-Countershaft |
| 7 | 92-0716 | 1 | Collar |
| 8 | 92-0717 | 1 | Gear-Countershaft |
| 10 | 92-0718 | 1 | Shifter |
| 11 | 105-7986 | 1 | Collar-Spline |
| 12 | 92-0712 | 1 | Bearing-Ball |
| 13 | 105-7987 | 2 | Ring-Snap |
| 14 | 92-0755 | 1 | Ring-Snap |
| 15 | 92-0783 | 1 | Race-Inner |
| 16 | 92-5186 | 1 | Pinion |

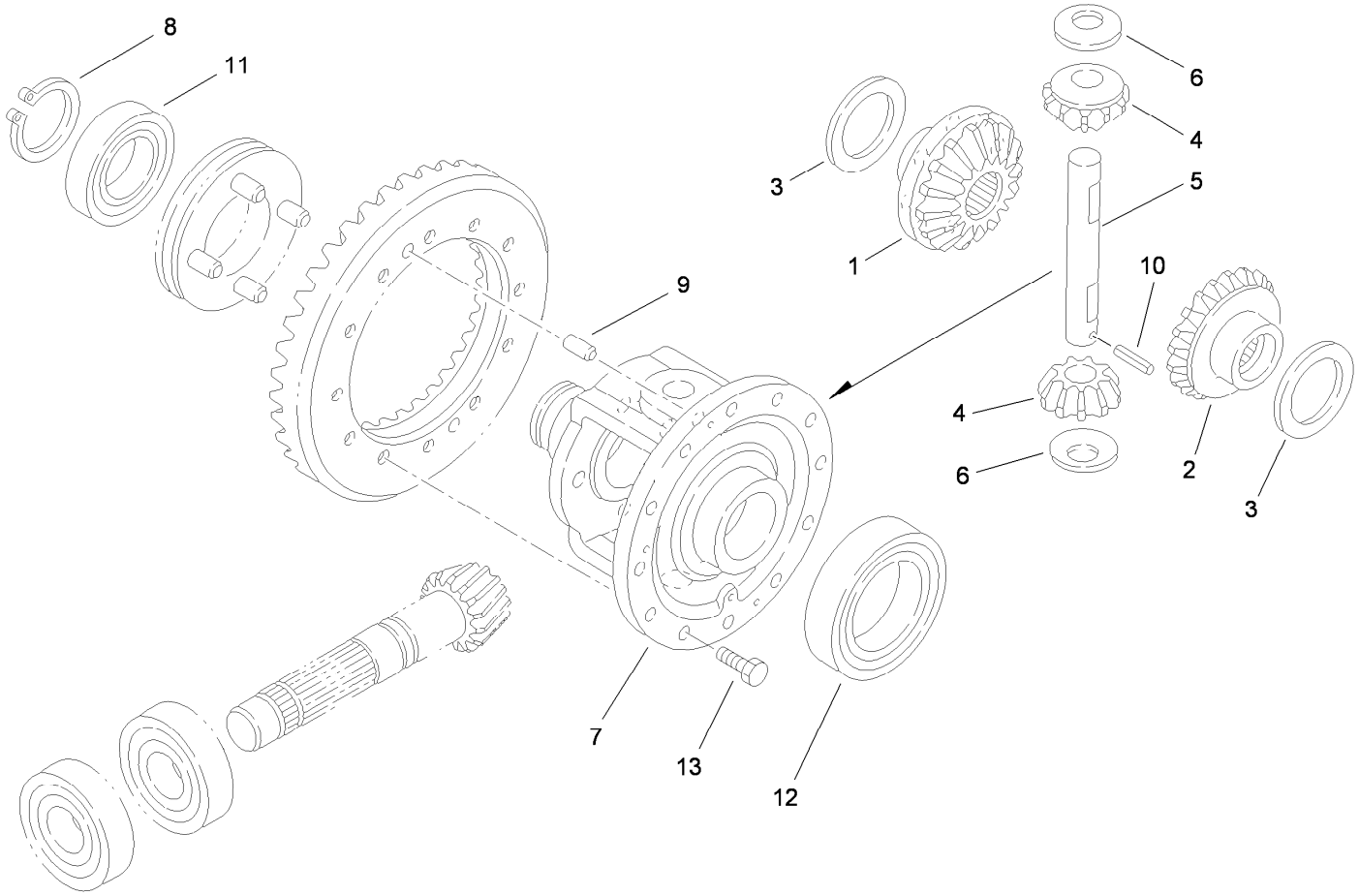


# Differential Gear Assembly
# 4 Wheel Drive Transaxle Assembly No. 115-2175

| *Ref.* | *Part Number* | *Qty.* | *Description* |
|---|---|---|---|
| 1 | 92-0745 | 1 | Gear-Side, LH |
| 2 | 92-0746 | 1 | Gear-Side, RH |
| 3 | 92-0747 | 2 | Side-Gear, Left Inner |
| 4 | 92-0748 | 2 | Pinion-Differential |
| 5 | 92-0749 | 1 | Shaft-Pinion |
| 6 | 92-0750 | 2 | Washer |
| 7 | 92-0720 | 1 | Case-Differential |
| 8 | 92-0756 | 1 | Ring-Snap |
| 9 | 92-0765 | 2 | Pin-Parallel |
| 10 | 92-0768 | 1 | Pin-Roll, Spring |
| 11 | 92-0775 | 1 | Bearing |
| 12 | 92-0776 | 1 | Bearing |
| 13 | 92-0803 | 12 | Bolt |

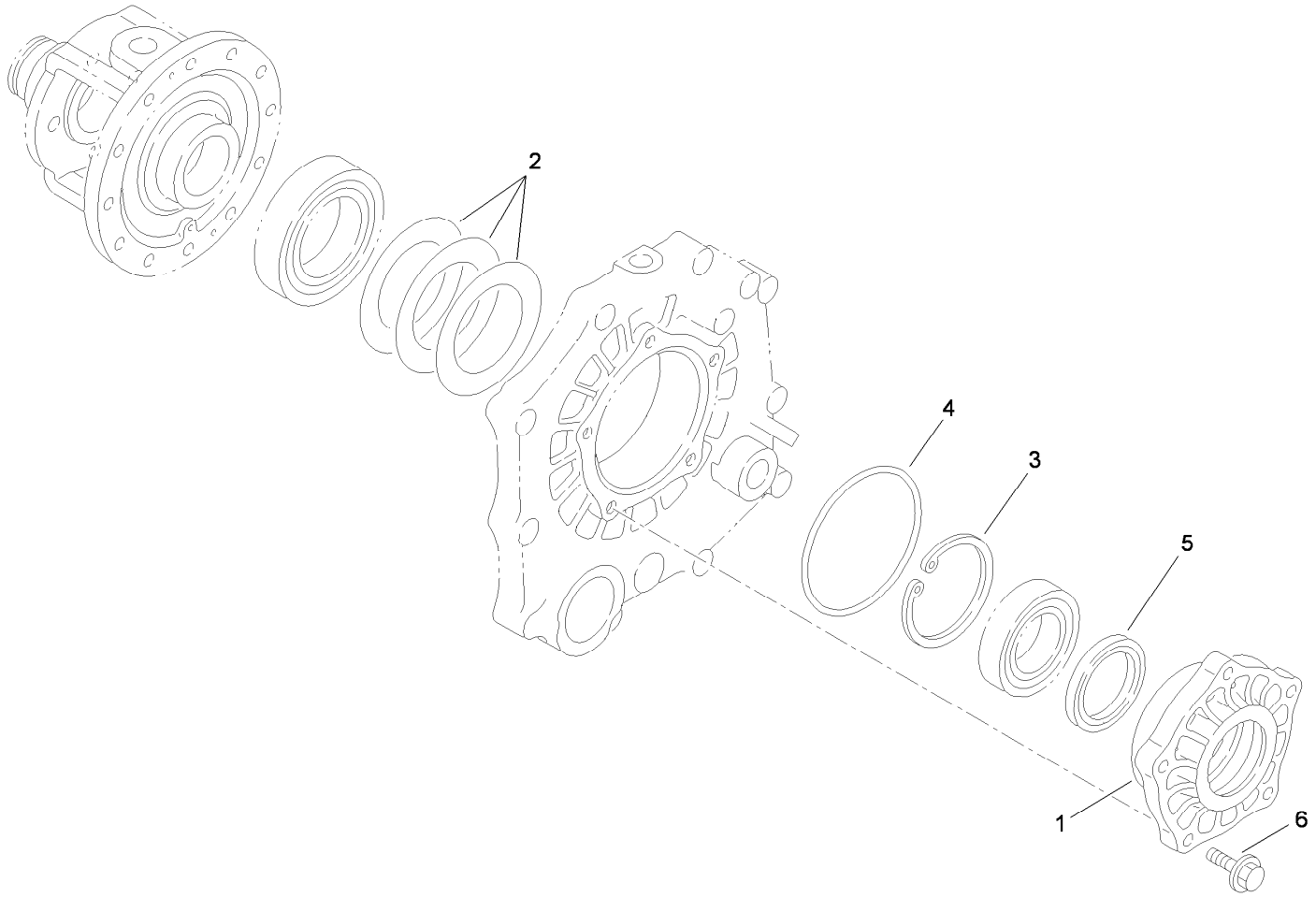


# Differential Carrier Assembly
# 4 Wheel Drive Transaxle Assembly No. 115-2175

| *Ref.* | *Part Number* | *Qty.* | *Description* |
|---|---|---|---|
| 1 | 92-0654 | 1 | Carrier-Differential |
| 2 | 92-0809 | 1 | Set-Shim |
| 3 | 92-0760 | 1 | Ring-Snap |
| 4 | 92-0789 | 1 | O-Ring |
| 5 | 92-0793 | 1 | Seal-Oil |
| 6 | 33104-030 | 5 | Screw-HHF |

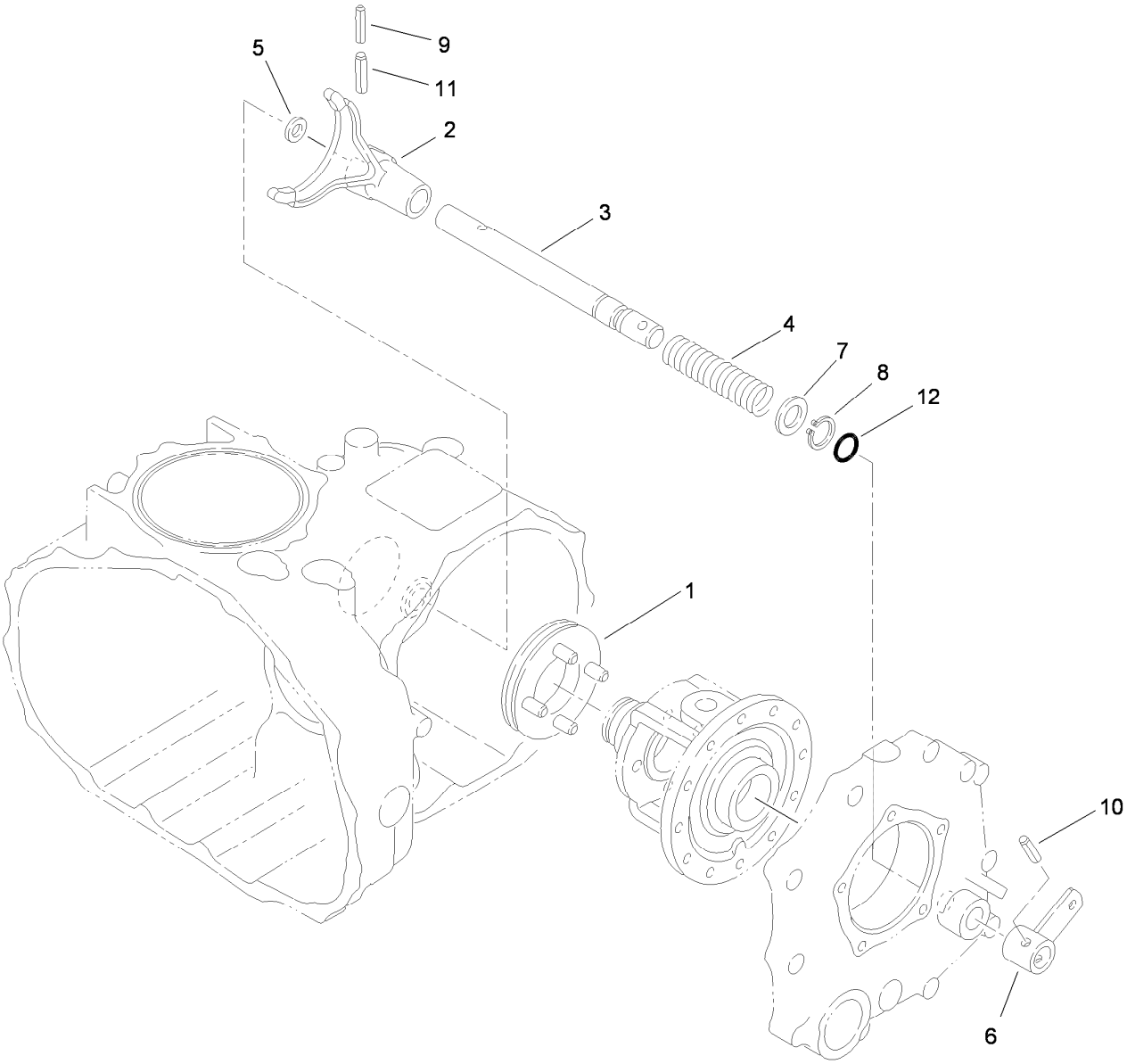


# Differential Lock Assembly
# 4 Wheel Drive Transaxle Assembly No. 115-2175

| *Ref.* | *Part Number* | *Qty.* | *Description* |
|---|---|---|---|
| 1 | 92-0730 | 1 | Slider-Differential, Lock |
| 2 | 92-0721 | 1 | Fork-Lock, Differential |
| 3 | 92-0722 | 1 | Shaft-Fork, Lock Differential |
| 4 | 92-0723 | 1 | Spring-Lock, Differential |
| 5 | 92-0744 | 1 | Washer |
| 6 | 92-0724 | 1 | Arm-Lock, Differential |
| 7 | 92-0733 | 1 | Washer |
| 8 | 92-0753 | 1 | Ring-Snap |
| 9 | 92-0768 | 1 | Pin-Roll, Spring |
| 10 | 92-0770 | 1 | Pin-Roll, Spring |
| 11 | 92-0771 | 1 | Pin-Roll, Spring |
| 12 | 92-0787 | 1 | O-Ring |

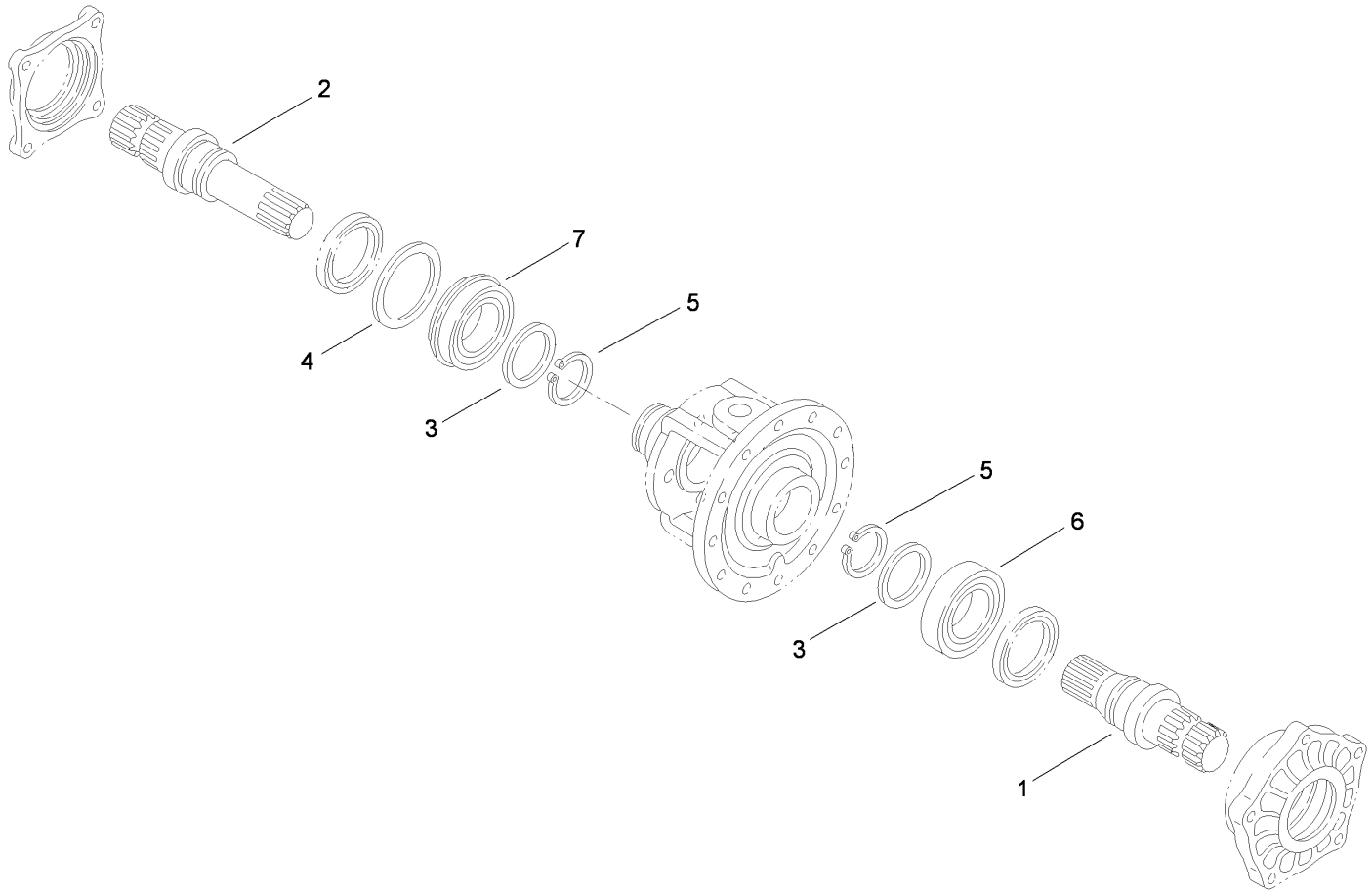


# Axle Shaft Assembly
# 4 Wheel Drive Transaxle Assembly No. 115-2175

| *Ref.* | *Part Number* | *Qty.* | *Description* |
|---|---|---|---|
| 1 | 92-0725 | 1 | Shaft-Axle, Left |
| 2 | 92-0726 | 1 | Shaft-Axle, Right |
| 3 | 92-0727 | 2 | Washer |
| 4 | 92-0728 | 1 | Washer |
| 5 | 92-0756 | 2 | Ring-Snap |
| 6 | 92-0775 | 1 | Bearing |
| 7 | 92-0780 | 1 | Bearing |

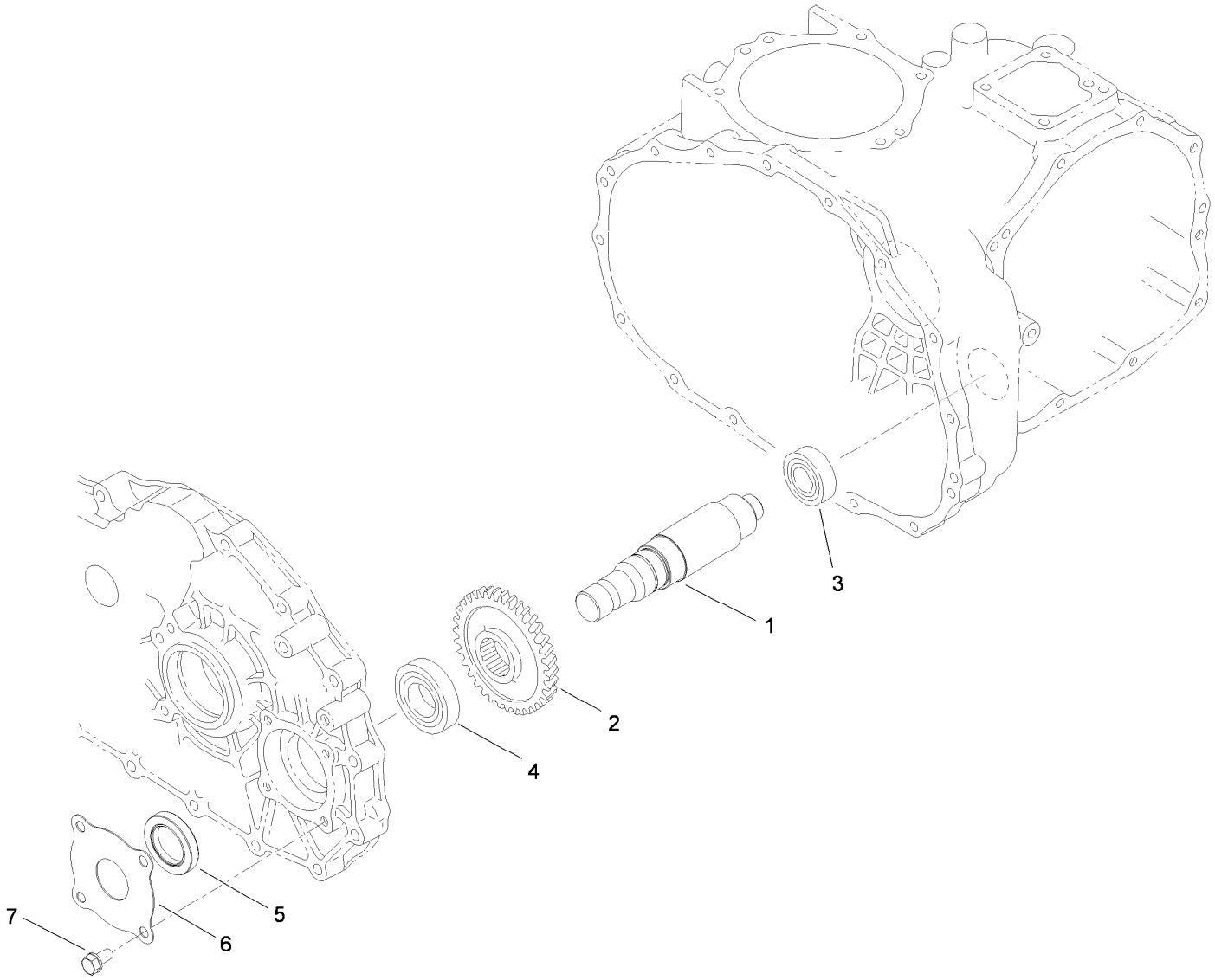


# Front Drive Assembly
# 4 Wheel Drive Transaxle Assembly No. 115-2175

| *Ref.* | *Part Number* | *Qty.* | *Description* |
|---|---|---|---|
| 1 | 115-7828 | 1 | Driveshaft-Front |
| 2 | 92-5184 | 1 | Gear |
| 3 | 251-346 | 1 | Bearing-Ball |
| 4 | 92-5185 | 1 | Bearing |
| 5 | 115-7829 | 1 | Seal |
| 6 | 115-7830 | 1 | Protector-Seal |
| 7 | 33104-016 | 4 | Screw-HHF |

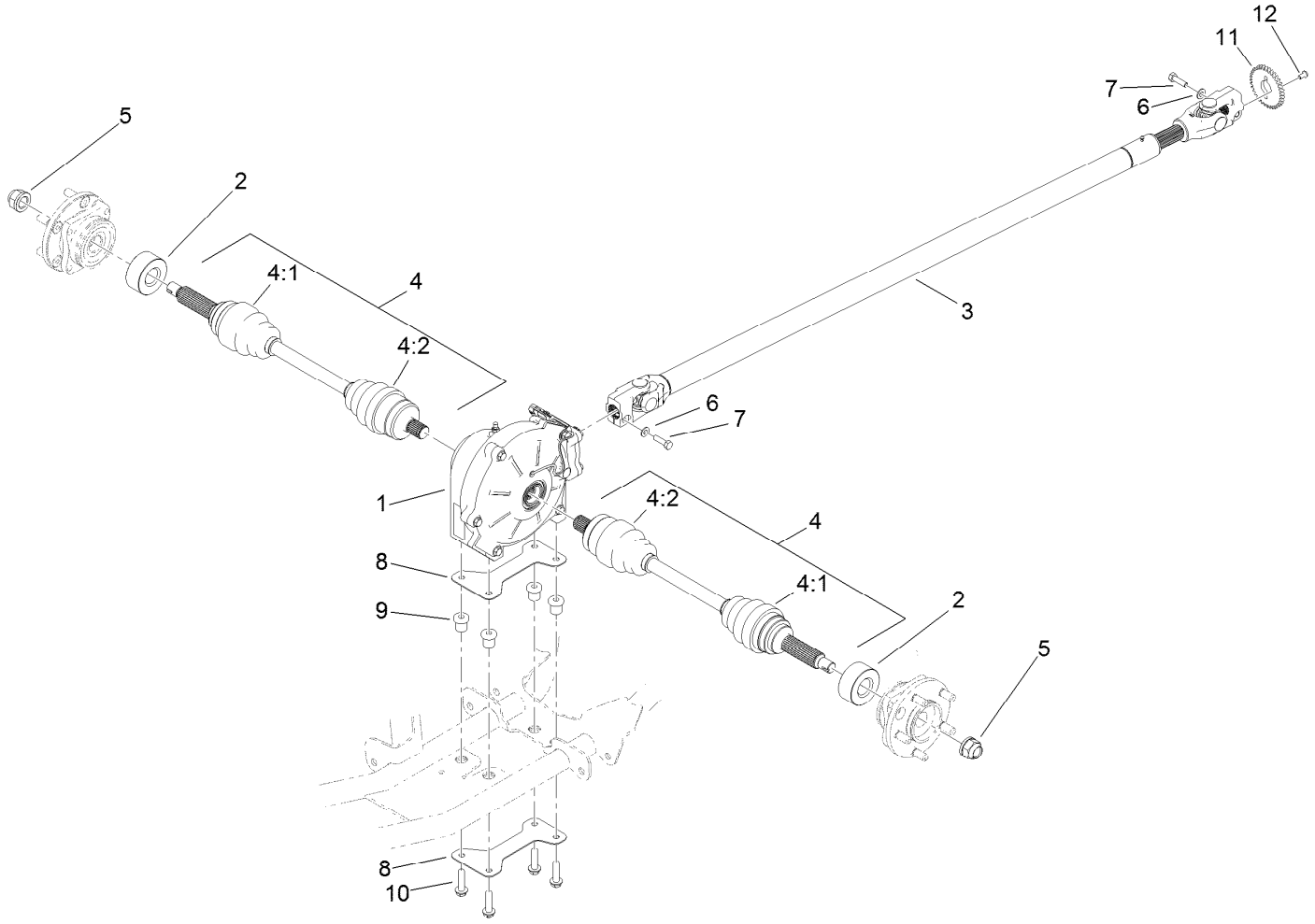


# 4 Wheel Drive Assembly

| Ref. | Part Number | Qty. | Description |
|---|---|---|---|
| 1 | 119-0824 | 1 | Differential ASM |
| 2 | 115-2254 | 2 | Spacer-Axle |
| 3 | 136-6327 | 1 | Drive Shaft ASM |
| 4 | 115-2172 | 2 | Cv Axle ASM |
| 4:1 | 107-2891 | 1 | Outboard Boot Kit |
| 4:2 | 107-2892 | 1 | Inboard Boot Kit |
| 5 | 115-2164 | 2 | Nut-Spindle |
| 6 | 3256-23 | 2 | Washer-Plain |
| 7 | 3210-6 | 2 | Screw-HH |
| 8 | 119-9477-03 | 2 | Plate-Differential |
| 9 | 63-9750 | 4 | Mount |
| 10 | 3234-18 | 4 | Screw-HHF |
| 11 | 136-6331 | 1 | Ring-Sensor, 4Wd |
| 12 | 137-2794 | 1 | Screw-HSBH |

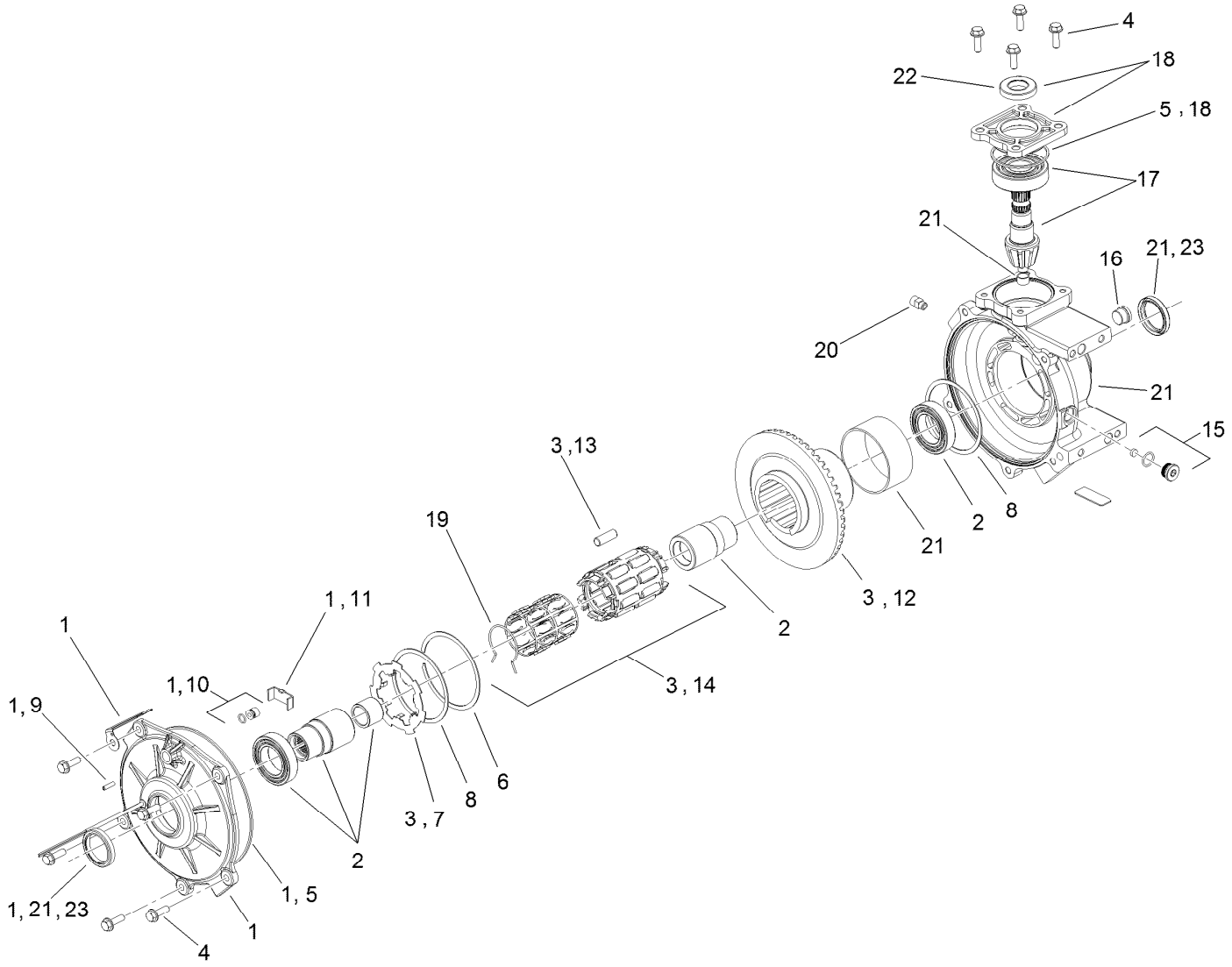


# Differential Assembly No. 119-0824

| Ref. | Part Number | Qty. | Description |
|---|---|---|---|
| 1 | 115-7790 | 1 | Output Cover ASM |
| 2 | 119-9479 | 1 | Output Hub ASM |
| 3 | 115-7792 | 1 | Clutch ASM |
| 4 | 115-7793 | 1 | Bolt Kit |
| 5 | 115-7794 | 1 | Seal Kit |
| 6 | 115-7795 | 1 | Ring-Retaining, Internal |
| 7 | 115-7796 | 1 | Plate-Armature, Notched |
| 8 | 115-7797 | 1 | Shim |
| 9 | 115-7798 | 1 | Screw-Set |
| 10 | 115-7799 | 1 | Thrust Button ASM |
| 11 | 115-7800 | 1 | Plate-Thrust |
| 12 | 115-7801 | 1 | Gear-Ring, 50T |

| Ref. | Part Number | Qty. | Description |
|---|---|---|---|
| 13 | 115-7802 | 1 | Roll Kit |
| 14 | 115-7803 | 1 | Roll Cage ASM |
| 15 | 115-7804 | 1 | Drain Plug ASM |
| 16 | 115-7805 | 1 | Plug-Oil, Fill |
| 17 | 115-7806 | 1 | Shaft-Pinion, 9T |
| 18 | 115-7807 | 1 | Input Cover ASM |
| 19 | 115-7808 | 1 | Spring-Torsion |
| 20 | 117-4985 | 1 | Vent-Protected |
| 21 | 119-9480 | 1 | Gearcase ASM |
| 22 | 127-8866 | 1 | Input Seal |
| 23 | 127-8867 | 2 | Output Seal |

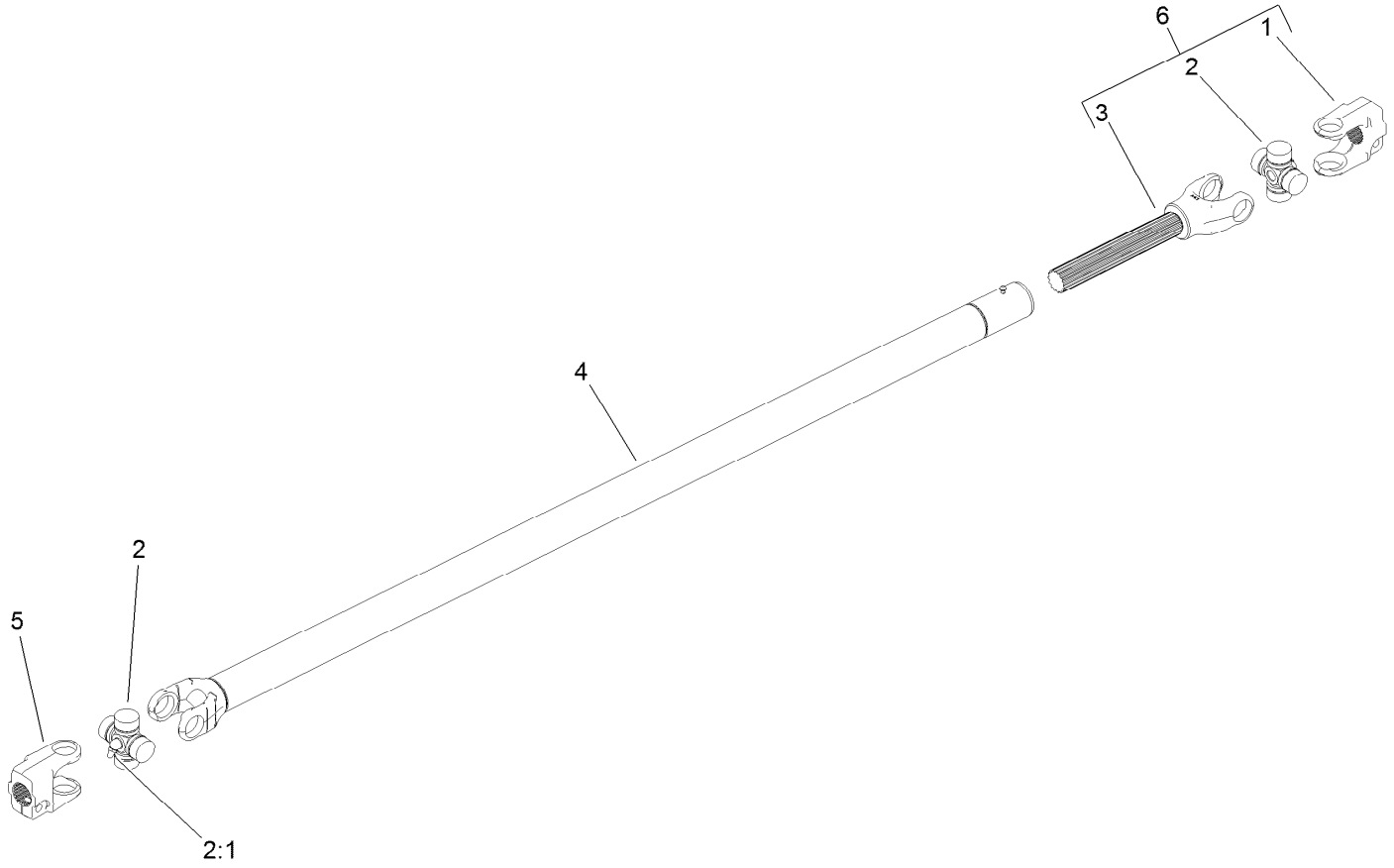


# Drive Shaft Assembly No. 136-6327

| *Ref.* | *Part Number* | *Qty.* | *Description* |
|---|---|---|---|
| 1 | 136-6326 | 1 | Yoke |
| 2 | 54-9180 | 2 | U-Joint Kit |
| 2:1 | 62-3820 | 1 | Fitting-Grease |
| 3 | 115-7708 | 1 | Yoke And Shaft |
| 4 | 115-7709 | 1 | Yoke, Tube And Slip Sleeve ASM |
| 5 | 115-7707 | 1 | Yoke |
| 6 | 136-6338 | 1 | Yoke And Shaft ASM |

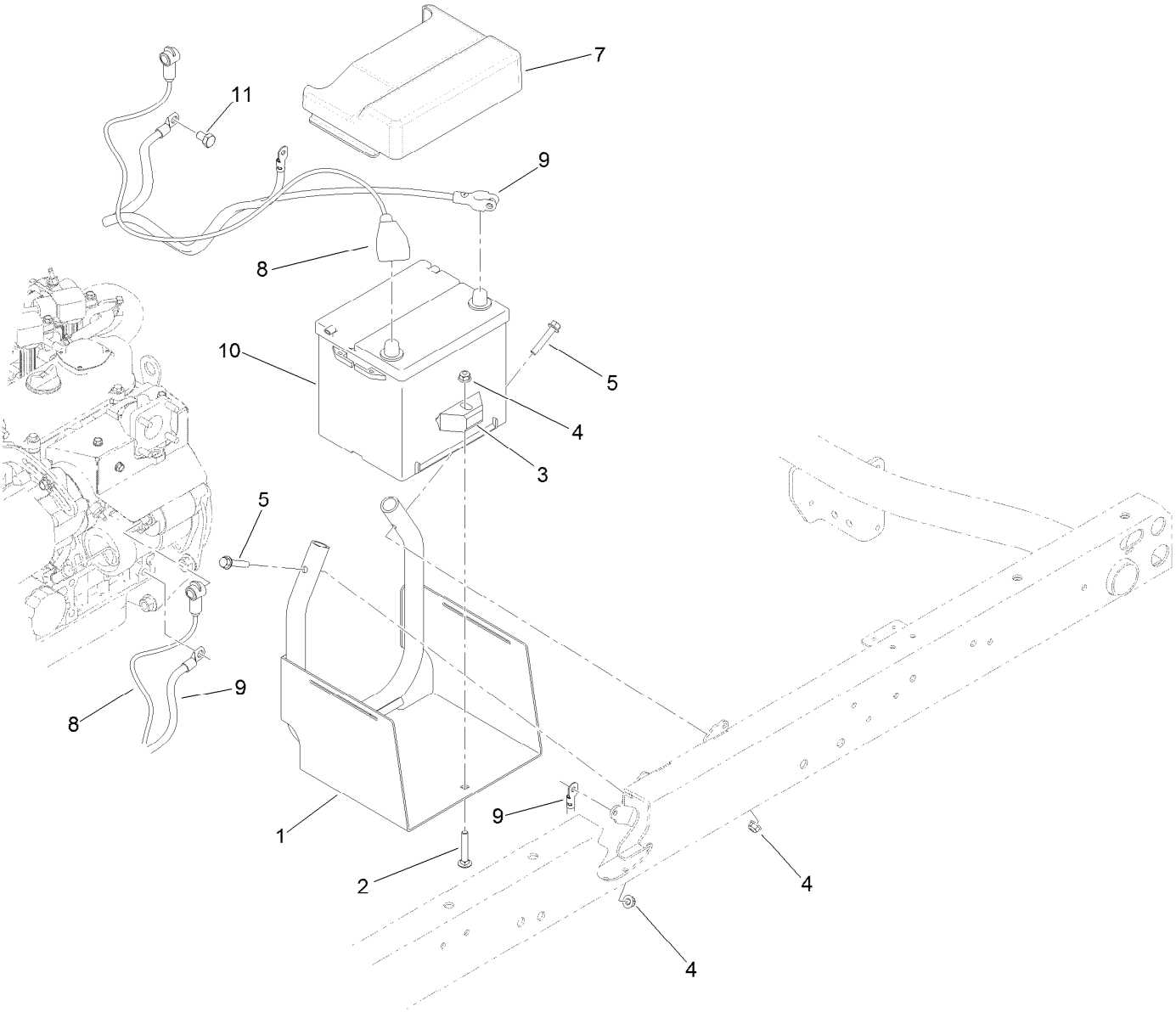


# Battery Assembly

| Ref. | Part Number | Qty. | Description |
|---|---|---|---|
| 1 | 115-2237-03 | 1 | Tray-Battery |
| 2 | 3230-6 | 1 | Bolt-CARR |
| 3 | 66-2490 | 1 | Retainer-Battery |
| 4 | 104-8300 | 3 | Nut-HF, NI |
| 5 | 94-5780 | 2 | Screw-HWH |
| 7 | 119-9496 | 1 | Cover-Battery |
| 8 | 122-0204 | 1 | Cable-Battery, Positive |
| 9 | 122-1024 | 1 | Cable-Battery, Negative |
| 10 | 106-5187 | 1 | Battery-Dry |
| 11 | 120-4839 | 1 | Screw-HHF |

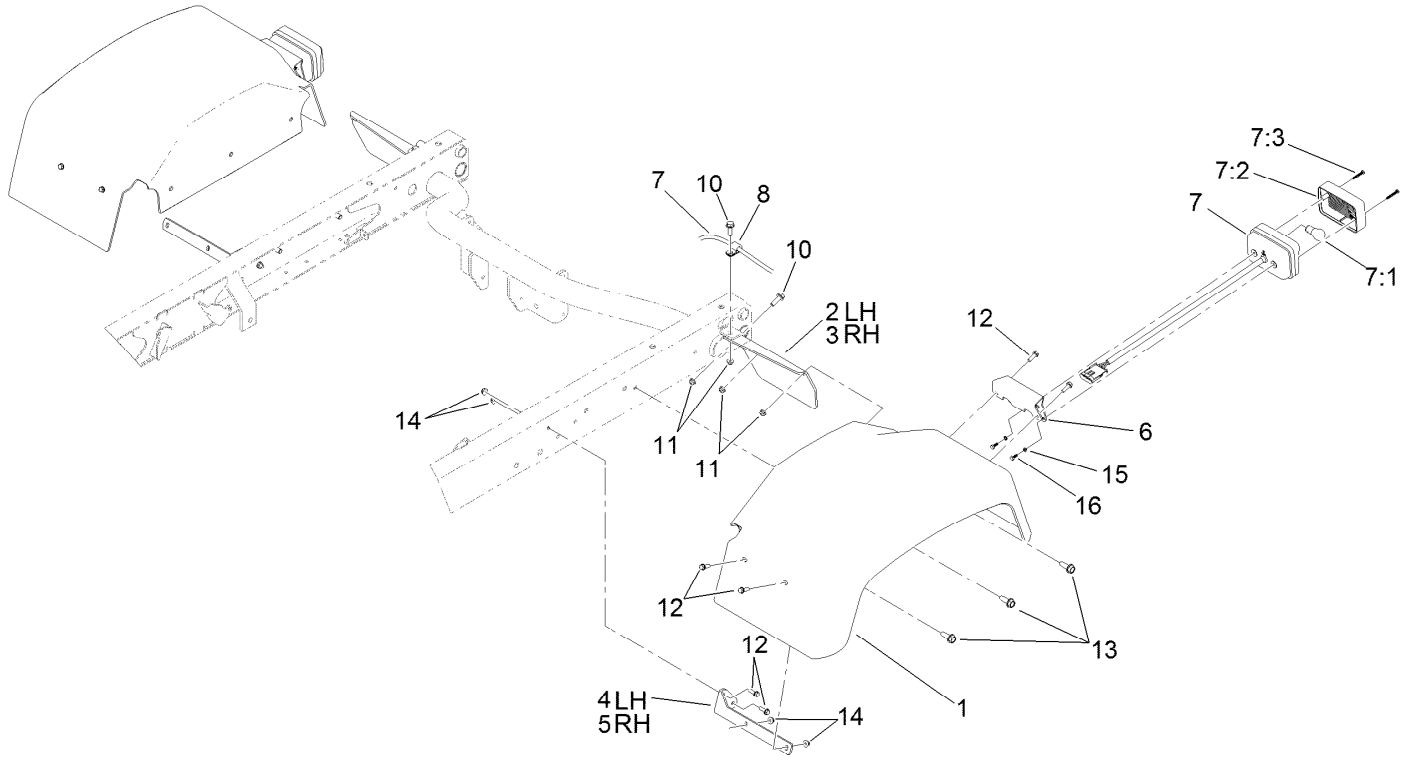


# Tail Light and Fender Assembly

| Ref. | Part Number | Qty. | Description |
|---|---|---|---|
| 1 | 132-6701 | 2 | Fender-Rear |
| 2 | 93-8943-03 | 1 | Bracket-Fender, Rear (LH) |
| 3 | 93-8944-03 | 1 | Bracket-Fender, Rear (RH) |
| 4 | 93-8941-03 | 1 | Bracket-Fender, Front (LH) |
| 5 | 93-8942-03 | 1 | Bracket-Fender, Front (RH) |
| 6 | 121-6269-03 | 2 | Bracket-Light, Tail |
| 7 | 120-4820 | 2 | Light-Tail, Brake |
| 7:1 | 115-7858 | 1 | Bulb-7528 |
| 7:2 | 121-6271 | 1 | Lens-Light, Tail |

| Ref. | Part Number | Qty. | Description |
|---|---|---|---|
| 7:3 | 121-6272 | 2 | Screw-PPH |
| 8 | 2412-93 | 2 | Clamp-R |
| 10 | 3234-17 | 4 | Screw-HHF |
| 11 | 104-8300 | 4 | Nut-HF, NI |
| 12 | 32105-15 | 12 | Screw-HWH |
| 13 | 105-6245 | 6 | Screw-Tapping |
| 14 | 104-7201 | 12 | Nut-HF |
| 15 | 43-5920 | 4 | Washer-Lock, Spring |
| 16 | 121-6320 | 4 | Screw-HH |

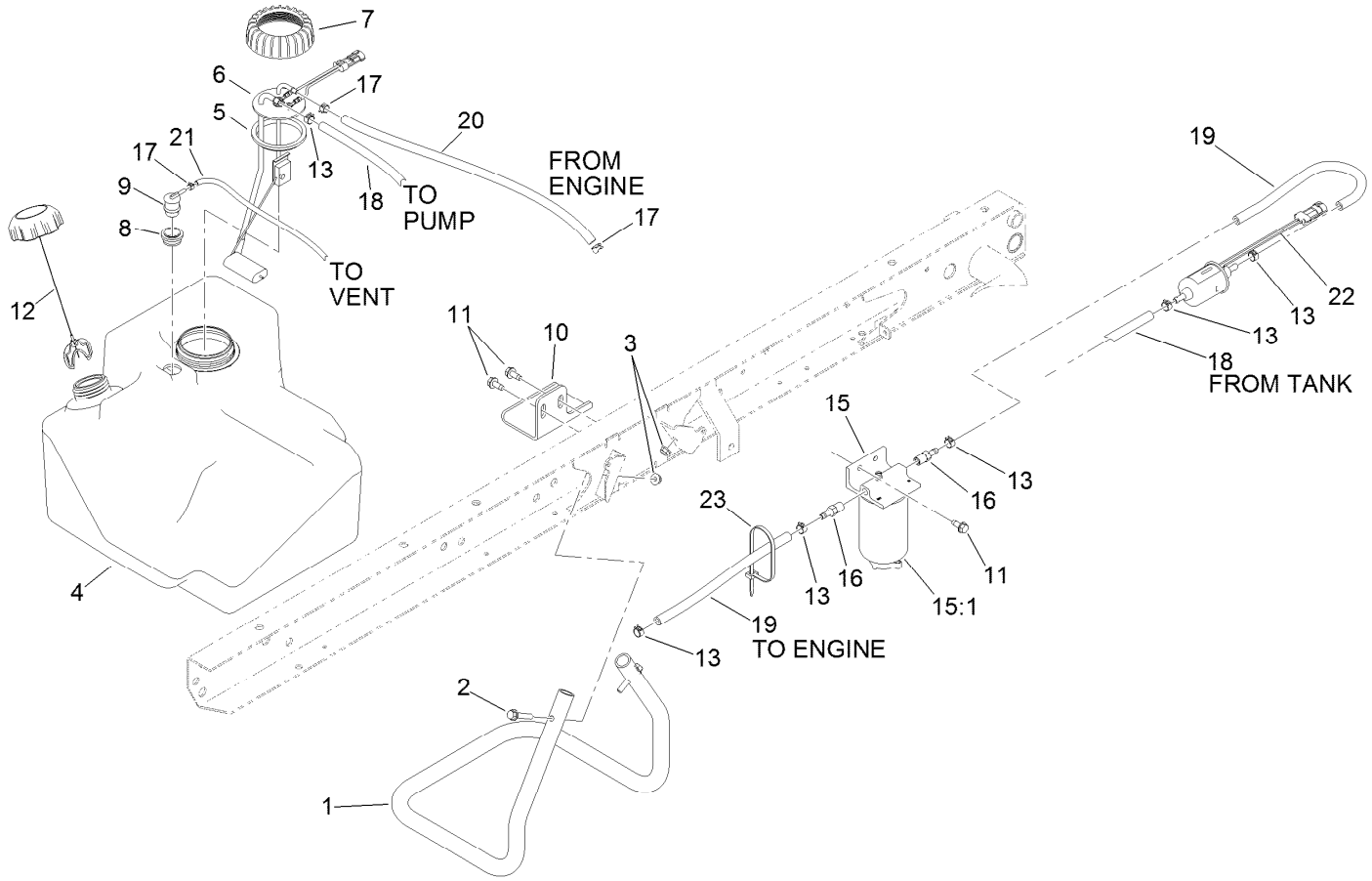


# Fuel System Assembly

| Ref. | Part Number | Qty. | Description |
|---|---|---|---|
| 1 | 115-7767-03 | 1 | Tube-Support |
| 2 | 94-5780 | 2 | Screw-HWH |
| 3 | 104-8300 | 2 | Nut-HF, NI |
| 4 | 119-0735 | 1 | Tank-Fuel |
| 5 | 115-2163 | 1 | Gasket-Pump, Fuel |
| 6 | 114-8348 | 1 | Sender-Fuel |
| 7 | 115-2162 | 1 | Cap-Pump, Fuel |
| 8 | 114-0284 | 1 | Grommet |
| 9 | 114-0285 | 1 | Valve-Rollover |
| 10 | 114-8404 | 1 | Plate-Retainer |
| 11 | 32144-70 | 4 | Screw-HWHTF |
| 12 | 115-7789 | 1 | Cap-Fuel, Diesel |

| Ref. | Part Number | Qty. | Description |
|---|---|---|---|
| 13 | 92-2379 | 6 | Clamp-Hose |
| 15 | 110-9044 | 1 | Separator-Filter |
| 15:1 | 110-9049 | 1 | Filter-Spin On |
| 16 | 353-783 | 2 | Fitting-STR |
| 17 | 2412-80 | 3 | Clamp-Hose |
| 18 | 114-8206 | 1 | Hose-Fuel |
| 19 | 110-4101 | 2 | Hose-Fuel |
| 20 | 120-5022 | 1 | Hose-Fuel |
| 21 | 110-8255 | 1 | Hose-Fuel |
| 22 | 110-8806 | 1 | Pump-Fuel |
| 23 | 3290-379 | 1 | Tie-Cable |

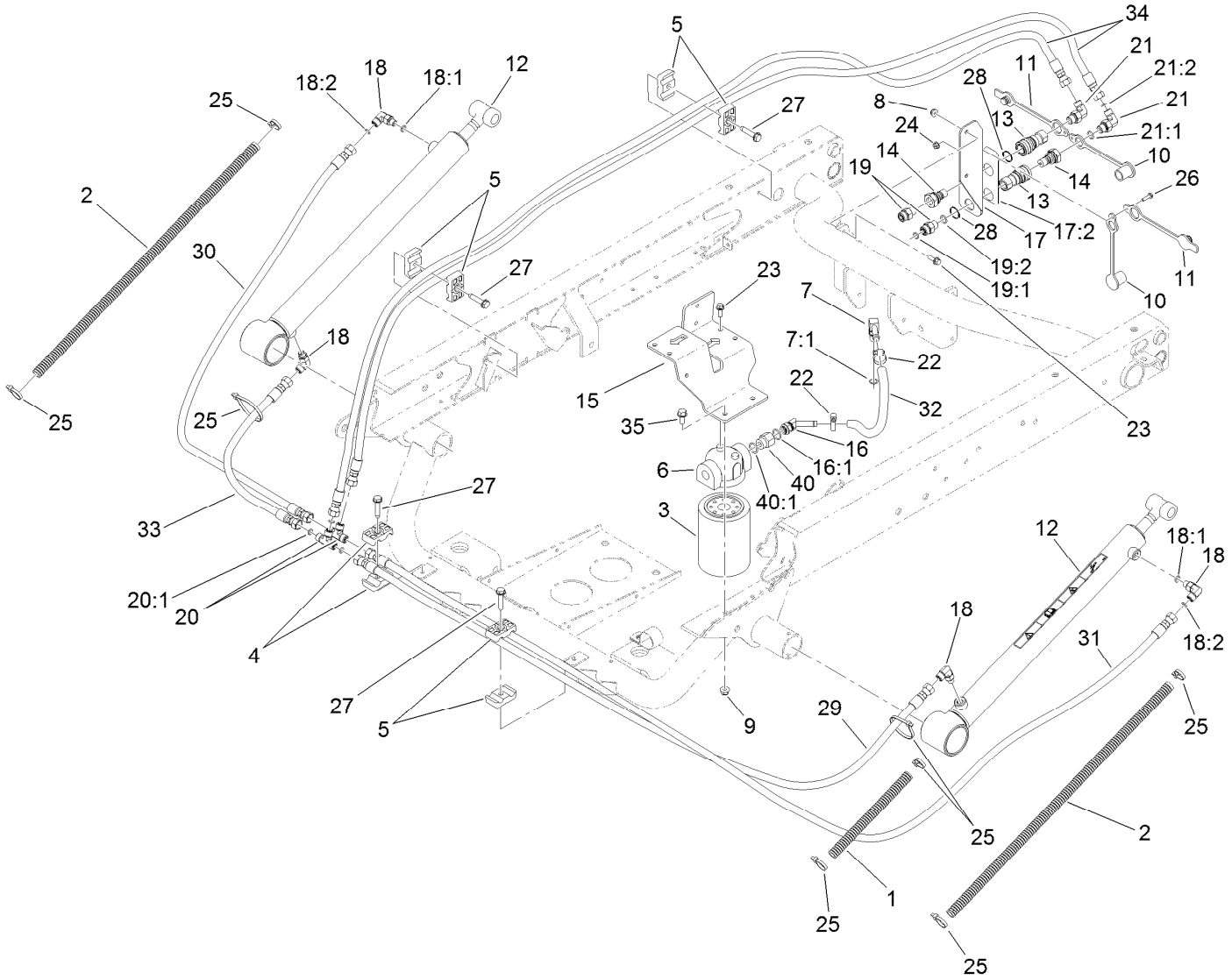


# Hydraulic Lift Cylinder Assembly

| Ref. | Part Number | Qty. | Description |
|---|---|---|---|
| 1 | 24-7922 | 1 | Conduit-Convoluted, Split |
| 2 | 24-7923 | 2 | Conduit-Convoluted, Split |
| 3 | 54-0110 | 1 | Filter-Oil, Transmission |
| 4 | 56-7971 | 2 | Clamp-Tube |
| 5 | 56-7976 | 6 | Clamp-Tube |
| 6 | 87-8780 | 1 | Head-Filter |
| 7 | 100-4887 | 1 | Fitting-Elbow, 90 |
| 7:1 | 237-42 | 1 | O-Ring |
| 8 | 104-7201 | 2 | Nut-HF |
| 9 | 104-8300 | 2 | Nut-HF, NI |
| 10 | 106-7881 | 2 | Cap-Dust, HYD |
| 11 | 106-7882 | 2 | Plug-Dust, HYD |
| 12 | 133-0620 | 2 | HYD Cylinder ASM |
| 13 | 106-7968 | 2 | Coupler-Quick, Female |
| 14 | 106-7969 | 2 | Coupler-Quick, Male |
| 15 | 115-2168-03 | 1 | Bracket-Filter |
| 16 | 103-1807 | 1 | Fitting-Barbed, 45 DEG |
| 16:1 | 237-42 | 1 | O-Ring |
| 17 | 115-7715 | 1 | Coupler Bracket ASM |
| 17:2 | 115-7723 | 1 | Decal-Disconnect, Quick |
| 18 | 340-132 | 4 | Fitting-Elbow, 90 DEG |

| Ref. | Part Number | Qty. | Description |
|---|---|---|---|
| 18:1 | 237-78 | 1 | O-Ring |
| 18:2 | 237-21 | 1 | O-Ring |
| 19 | 340-2 | 2 | Fitting-Straight |
| 19:1 | 237-22 | 1 | O-Ring |
| 19:2 | 237-42 | 1 | O-Ring |
| 20 | 340-21 | 2 | Fitting |
| 20:1 | 237-21 | 3 | O-Ring |
| 21 | 340-82 | 2 | Fitting-Elbow, 90 DEG |
| 21:1 | 237-42 | 1 | O-Ring |
| 21:2 | 237-21 | 1 | O-Ring |
| 22 | 2412-36 | 2 | Clamp-Hose |
| 23 | 3234-4 | 4 | Screw-HHF |
| 24 | 3290-148 | 1 | Nut-HF |
| 25 | 3290-379 | 6 | Tie-Cable |
| 26 | 32105-13 | 1 | Screw-HWH |
| 27 | 32144-57 | 4 | Screw |
| 28 | 32151-83 | 2 | Ring-Snap |
| 29 | 115-7711 | 1 | Hose-HYD |
| 30 | 108-6508 | 1 | Hose-HYD |
| 31 | 104-3716 | 1 | Hose-HYD |
| 32 | 115-2228 | 1 | Hose-HYD |

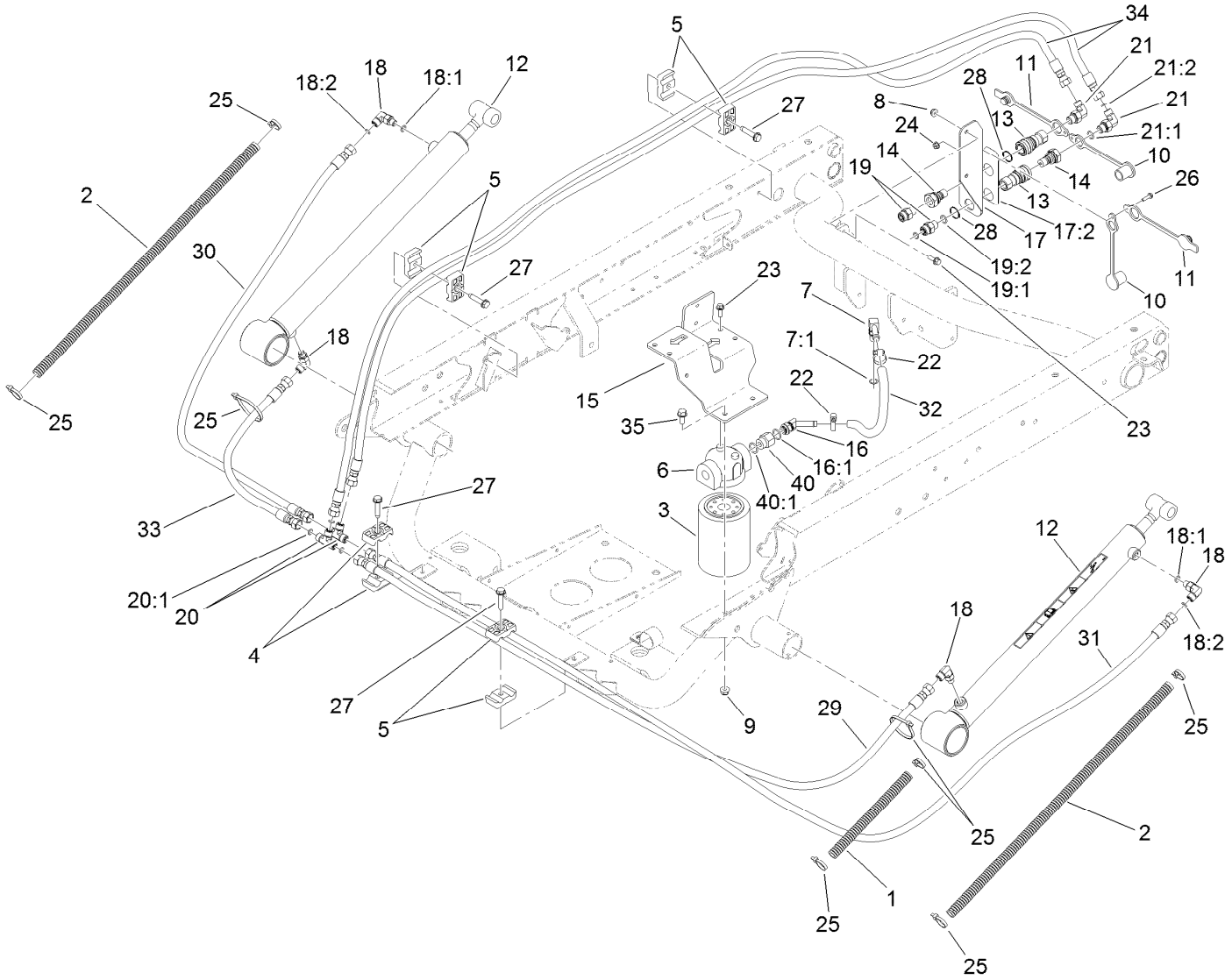


# Hydraulic Lift Cylinder Assembly (continued)

| Ref. | Part Number | Qty. | Description |
|---|---|---|---|
| 33 | 110-0931 | 1 | Hose-HYD |
| 34 | 106-3680 | 2 | Hose-HYD |
| 35 | 3234-5 | 2 | Screw-HHF |

| Ref. | Part Number | Qty. | Description |
|---|---|---|---|
| 40 | 353-397 | 1 | Reducer-Adapter |
| 40:1 | 237-79 | 1 | O-Ring |

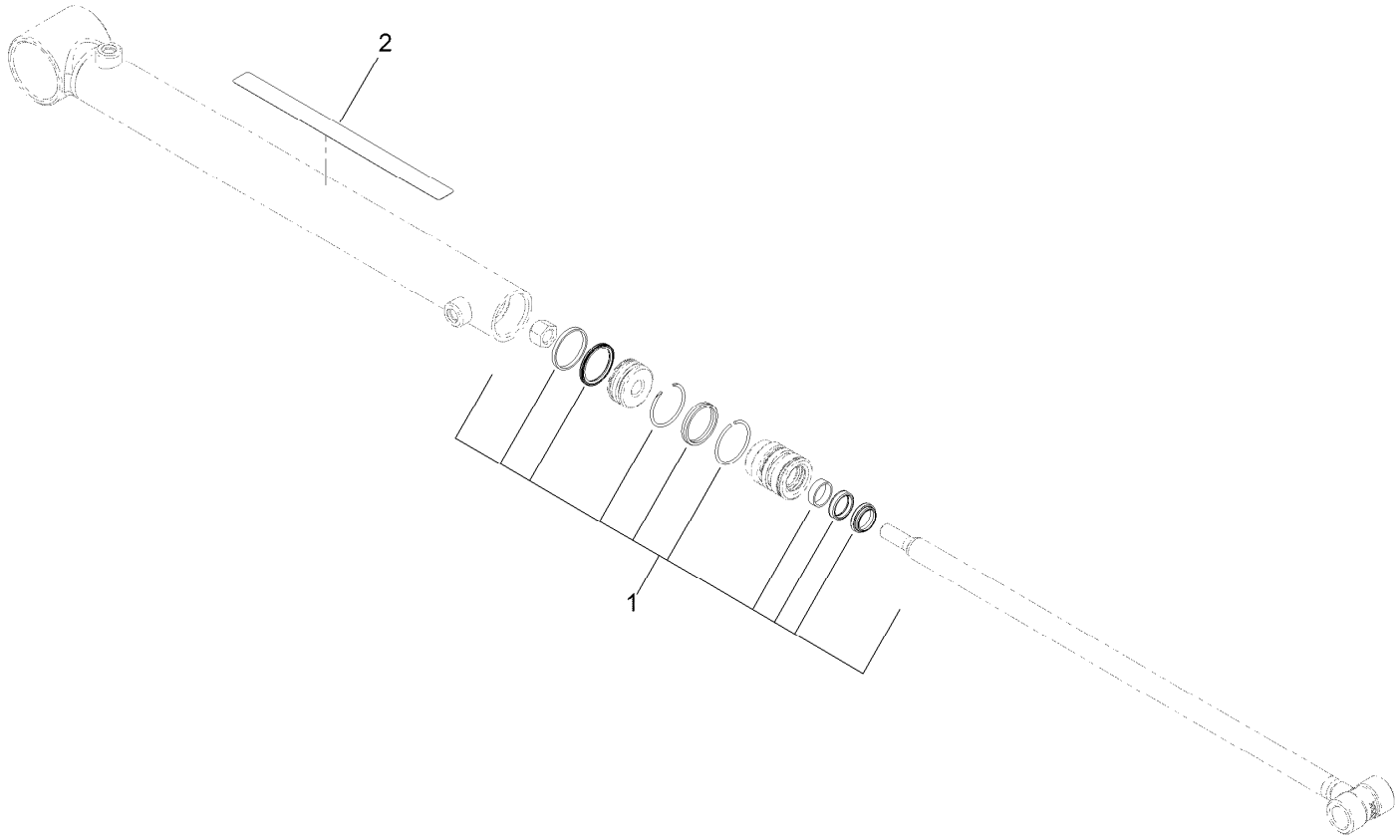


# Hydraulic Cylinder Assembly No. 133-0620

| *Ref.* | *Part Number* | *Qty.* | *Description* |
|---|---|---|---|
| 1 | 133-0618 | 1 | Cylinder Seal Kit |
| 2 | 93-9852 | 1 | Decal-Warning |

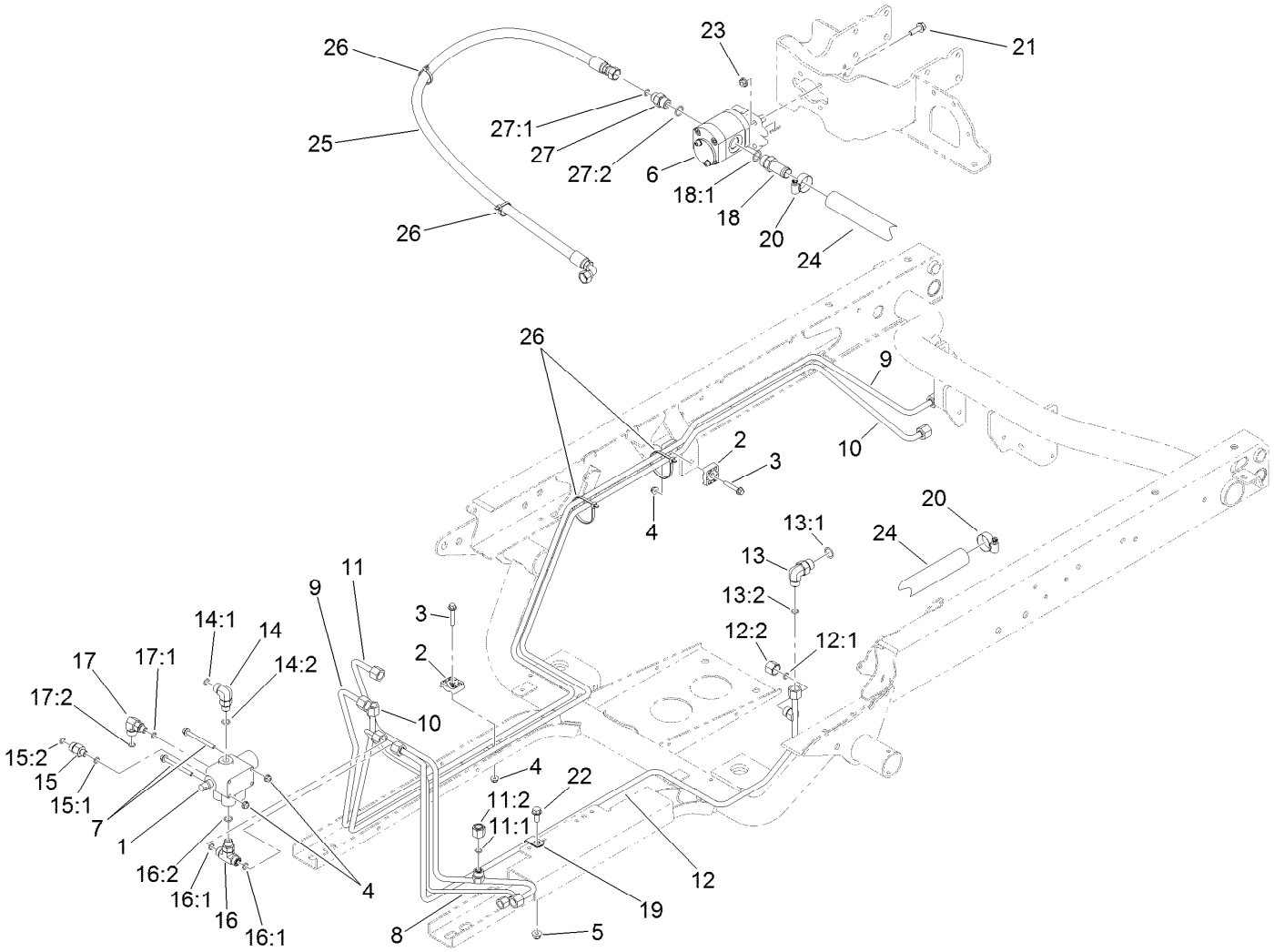


# Main Hydraulic Pump and Lift Valve Assembly

| Ref. | Part Number | Qty. | Description |
|---|---|---|---|
| 1 | 43-1950 | 1 | HYD Control Valve ASM |
| 2 | 56-7973 | 4 | Clamp-Tube |
| 3 | 94-5781 | 2 | Screw-HHF |
| 4 | 104-7201 | 4 | Nut-HF |
| 5 | 104-8300 | 1 | Nut-HF, NI |
| 6 | 114-8302 | 1 | HYD Pump ASM |
| 7 | 114-8410 | 2 | Screw-HHF |
| 8 | 127-8605 | 1 | Tube-HYD |
| 9 | 115-2217 | 1 | Tube-HYD |
| 10 | 115-2218 | 1 | Tube-HYD |
| 11 | 127-8604 | 1 | Tube-HYD |
| 11:1 | 237-22 | 1 | O-Ring |
| 11:2 | 340-117 | 1 | Cap |
| 12 | 127-8752 | 1 | Tube-HYD |
| 12:1 | 237-22 | 1 | O-Ring |
| 12:2 | 340-117 | 1 | Cap |
| 13 | 340-18 | 1 | Fitting-HYD, 90 DEG |
| 13:1 | 237-79 | 1 | O-Ring |
| 13:2 | 237-22 | 1 | O-Ring |
| 14 | 340-77 | 1 | Fitting-Elbow, 90 DEG |
| 14:1 | 237-22 | 1 | O-Ring |

| Ref. | Part Number | Qty. | Description |
|---|---|---|---|
| 14:2 | 237-42 | 1 | O-Ring |
| 15 | 340-88 | 1 | Fitting-Straight |
| 15:1 | 237-22 | 1 | O-Ring |
| 15:2 | 237-78 | 1 | O-Ring |
| 16 | 340-94 | 1 | Adapter |
| 16:1 | 237-22 | 2 | O-Ring |
| 16:2 | 237-42 | 1 | O-Ring |
| 17 | 340-97 | 1 | Fitting-Elbow, 90 DEG |
| 17:1 | 237-22 | 1 | O-Ring |
| 17:2 | 237-78 | 1 | O-Ring |
| 18 | 354-136 | 1 | Fitting-STR |
| 18:1 | 237-80 | 1 | O-Ring |
| 19 | 2412-113 | 1 | Clamp-R |
| 20 | 2412-129 | 2 | Clamp-Hose |
| 21 | 3234-17 | 4 | Screw-HHF |
| 22 | 3234-5 | 1 | Screw-HHF |
| 23 | 32128-20 | 4 | Nut-HF |
| 24 | 87-3670 | 1 | Hose-Suction |
| 25 | 121-6283 | 1 | Hose-HYD |
| 26 | 3290-379 | 4 | Tie-Cable |
| 27 | 340-3 | 1 | Fitting-Straight |

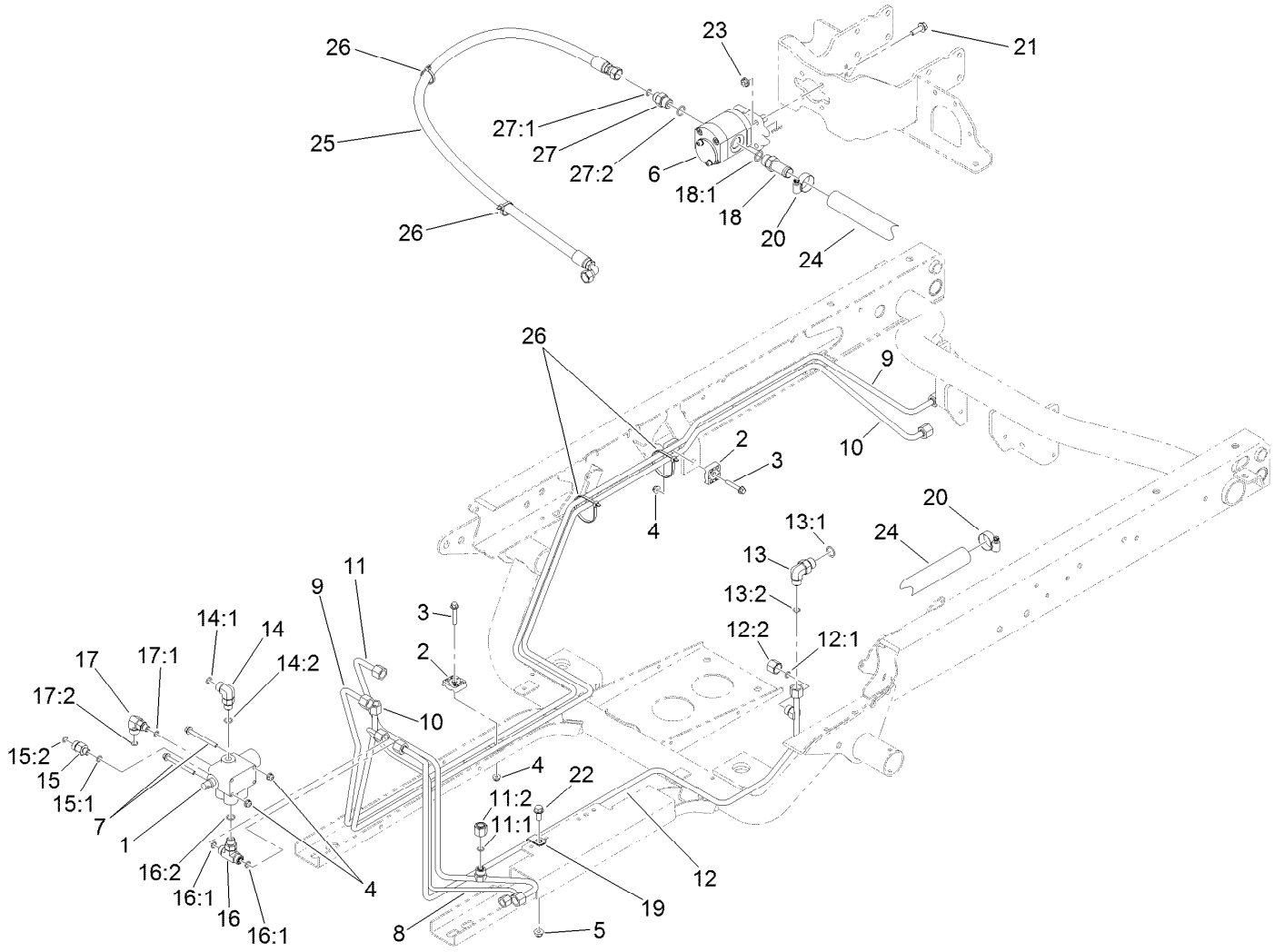


# Main Hydraulic Pump and Lift Valve Assembly (continued)

| *Ref.* | *Part Number* | *Qty.* | *Description* |
|---|---|---|---|
| 27:1 | 237-22 | 1 | O-Ring |
| 27:2 | 237-79 | 1 | O-Ring |

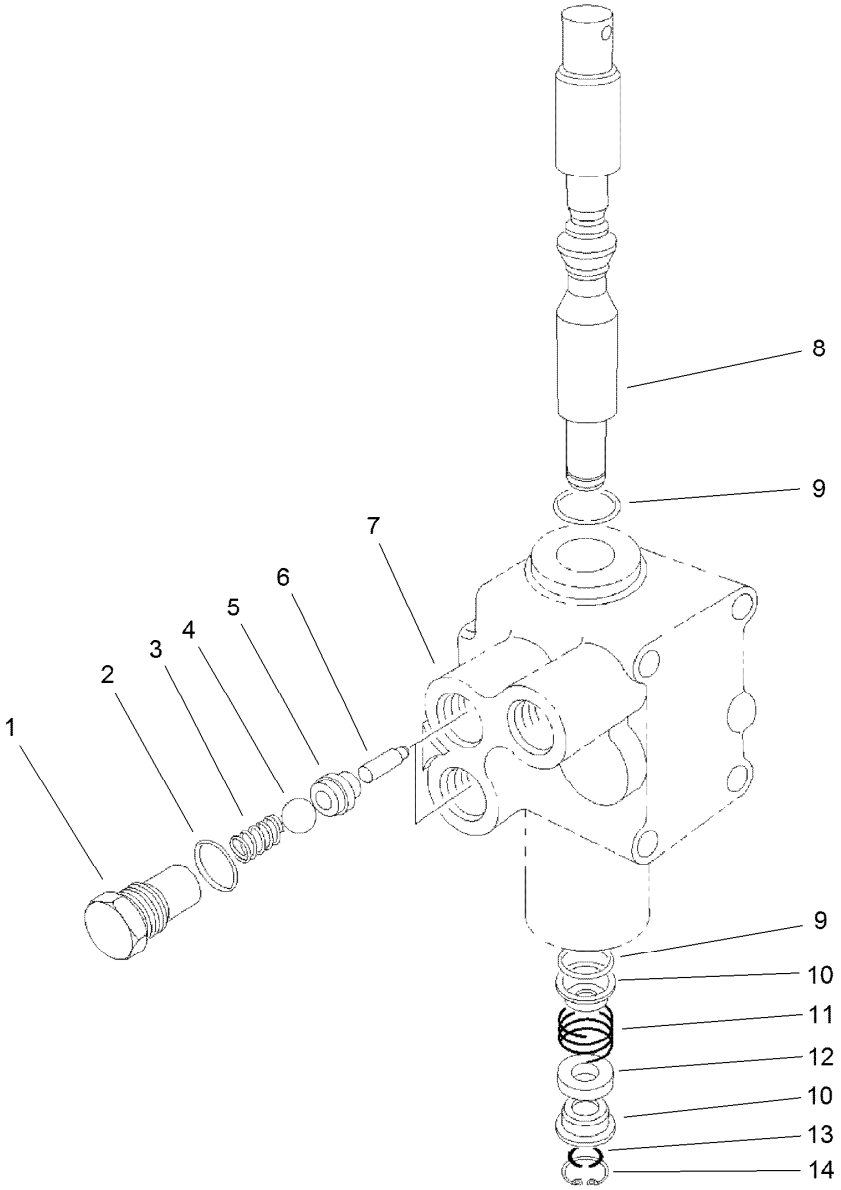


# Control Valve Assembly No. 43-1950

| Ref. | Part Number | Qty. | Description |
|---|---|---|---|
| 1 | 22-8330 | 2 | Plug |
| 2 | 237-42 | 2 | O-Ring |
| 3 | 22-8340 | 2 | Spring |
| 4 | 22-8350 | 2 | Ball |
| 5 | 22-8370 | 2 | Seat-Valve |
| 6 | 22-8360 | 2 | Pin |
| 7 | | 1 | Body ● |
| 8 | 22-8420 | 1 | Spool |
| 9 | 22-8500 | 2 | O-Ring |
| 10 | 22-8380 | 2 | Retainer |
| 11 | 22-8410 | 1 | Spring |
| 12 | 23-3030 | 1 | Spacer |
| 13 | 22-8480 | 1 | Ring-Snap |
| 14 | 22-8490 | 1 | Ring-Snap |

● Not serviced separately

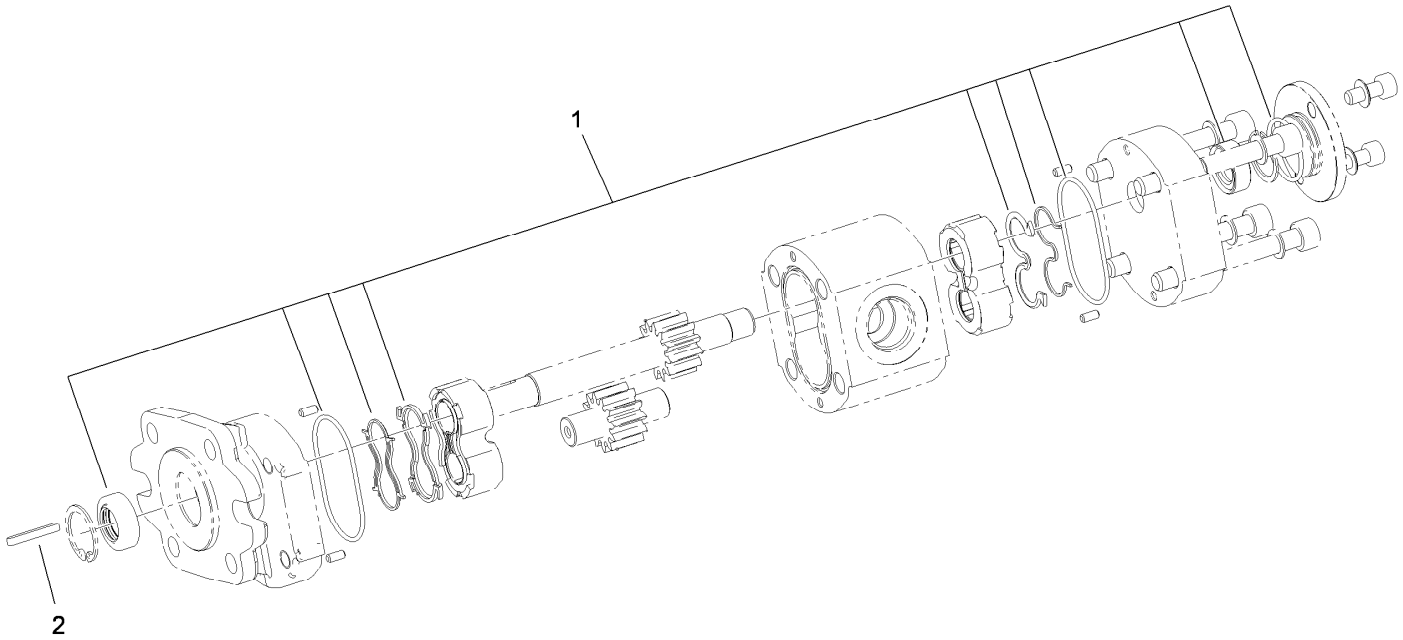


# Hydraulic Gear Pump Assembly No. 114-8302

| *Ref.* | *Part Number* | *Qty.* | *Description* |
|---|---|---|---|
| 1 | 115-8696 | 1 | Seal Kit |
| 2 | 115-7855 | 1 | Key-Square |

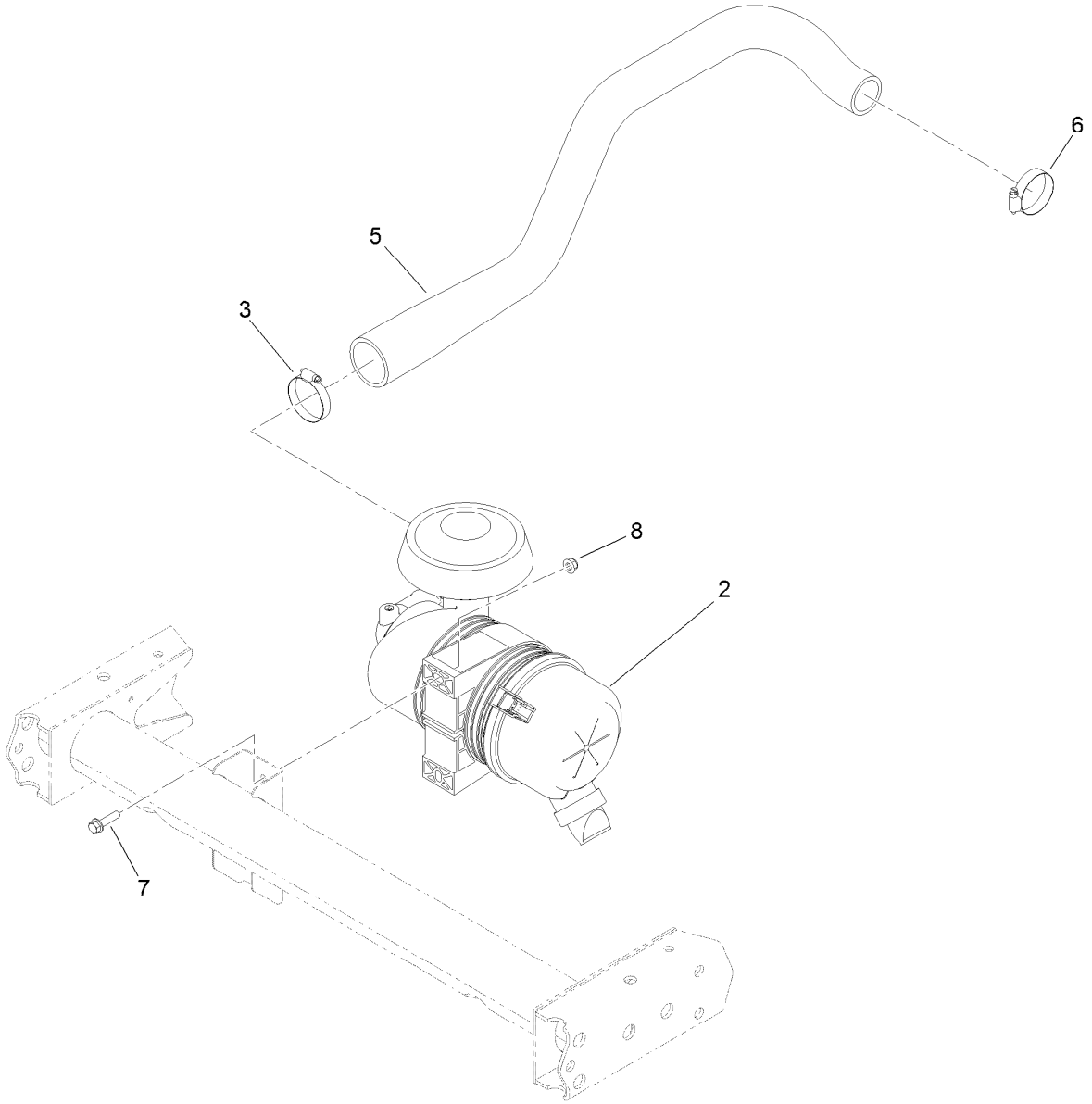


# Air Cleaner Assembly

| Ref. | Part Number | Qty. | Description |
|---|---|---|---|
| 2 | 138-5650 | 1 | Air Cleaner ASM |
| 3 | 2412-130 | 1 | Clamp-Hose |
| 5 | 120-5097 | 1 | Hose-Intake, Air (Diesel) |
| 6 | 2412-3 | 1 | Clamp-Hose |
| 7 | 3234-36 | 2 | Screw-HHF |
| 8 | 104-8300 | 2 | Nut-HF, NI |

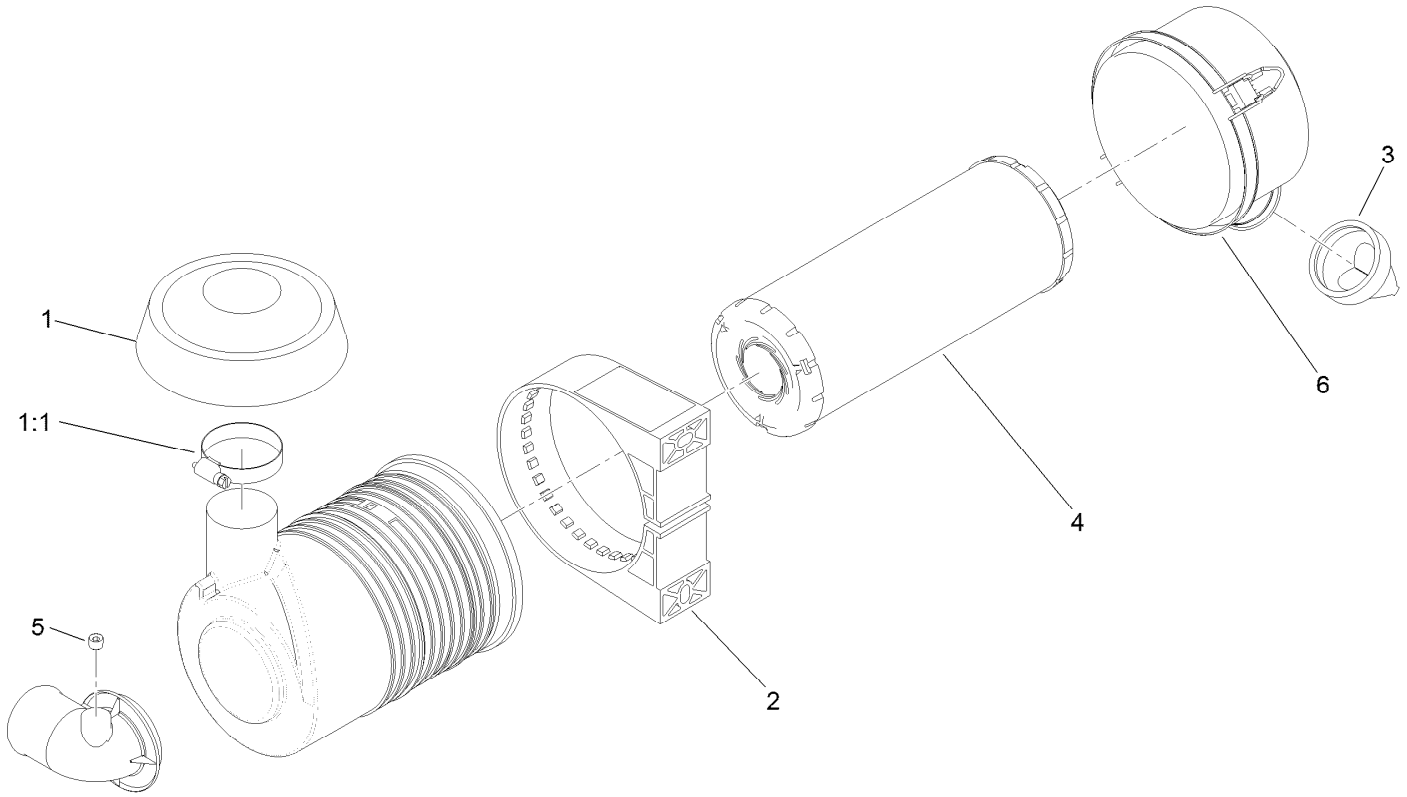


# Air Cleaner Assembly No. 138-5650

| *Ref.* | *Part Number* | *Qty.* | *Description* |
|---|---|---|---|
| 1 | 105-2539 | 1 | Cap |
| 1:1 | 2412-130 | 1 | Clamp-Hose |
| 2 | 98-4525 | 1 | Bracket-Cleaner, Air |
| 3 | 87-9400 | 1 | Valve-Vacuator |
| 4 | 108-3810 | 1 | Filter-Air |
| 5 | 285-17 | 1 | Plug-Pipe |
| 6 | 98-9771 | 1 | Cover ASM |

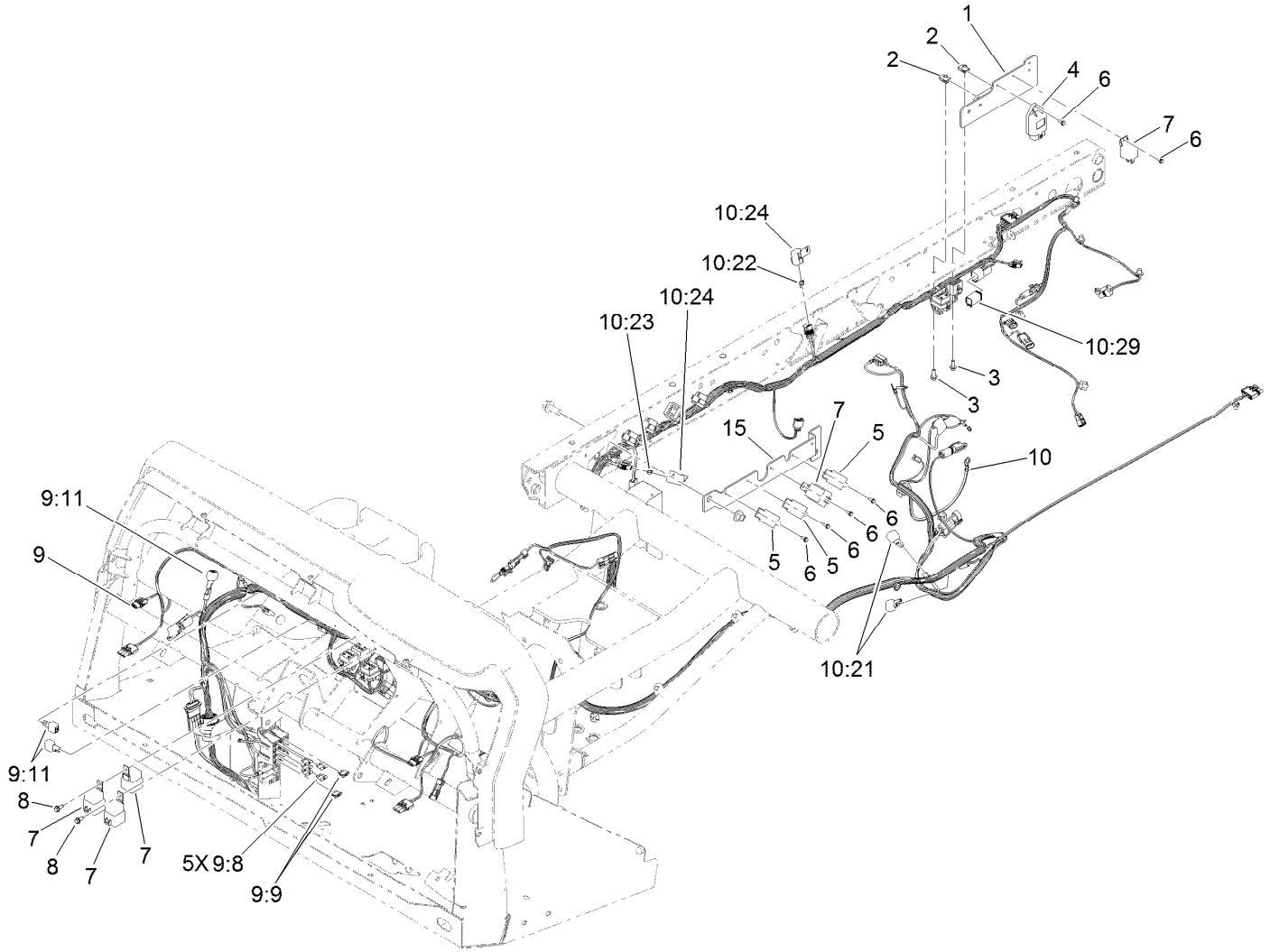


# Front and Rear Wire Harness Assembly

| Ref. | Part Number | Qty. | Description |
|---|---|---|---|
| 1 | 132-6714-03 | 1 | Bracket-Mount, Filter |
| 2 | 107069 | 2 | Clip |
| 3 | 3234-4 | 2 | Screw-HHF |
| 4 | 98-7611 | 1 | Controller-Glow |
| 5 | 99-7435 | 3 | Relay |
| 6 | 32144-112 | 6 | Screw-HWH |
| 7 | 99-7430 | 5 | Relay-Mini |
| 8 | 32144-10 | 2 | Screw-HWH |
| 9 | 122-1447 | 1 | Harness-Wire, Front |
| 9:8 | 218-578 | 5 | Fuse-Blade, 10 Amp |

| Ref. | Part Number | Qty. | Description |
|---|---|---|---|
| 9:9 | 109355 | 2 | Fuse-Blade, 15 Amp |
| 9:11 | 100-4918 | 3 | Diode |
| 10 | 122-0901 | 1 | Harness-Wire, Diesel (Rear) |
| 10:21 | 100-4918 | 2 | Diode |
| 10:22 | 121-8867 | 1 | Fuse-Mini Blade, 15 Amp |
| 10:23 | 121-8870 | 1 | Fuse-Mini Blade, 30 Amp |
| 10:24 | 32180-101 | 2 | Cover-Fuse, Single |
| 10:29 | 122-1131 | 1 | Capacitor-Sealed |
| 15 | 132-6713-03 | 1 | Bracket-Mount, Relay |

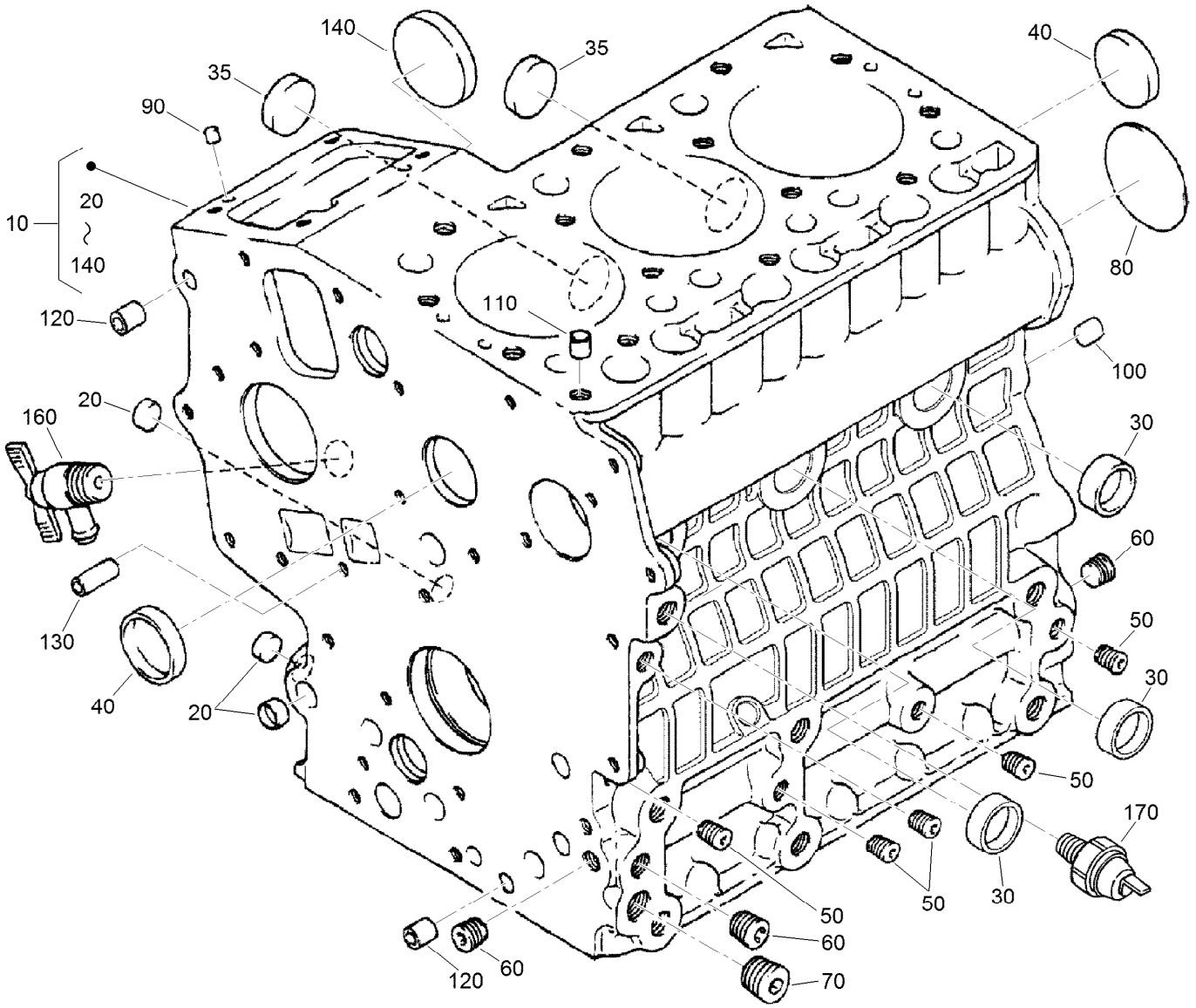


# Crankcase Assembly

| Ref. | Part Number | Qty. | Description |
|---|---|---|---|
| 10 | 120-3120 | 1 | Crankcase ASM |
| 20 | 100-2019 | 3 | Cap-Sealing |
| 30 | 100-2020 | 3 | Cap-Sealing |
| 35 | 110-3702 | 2 | Cap-Sealing |
| 40 | 98-9398 | 2 | Cap-Sealing |
| 50 | 98-9687 | 5 | Plug |
| 60 | 98-7487 | 3 | Plug |
| 70 | 98-7488 | 1 | Plug |
| 80 | 100-1851 | 1 | Plug-Expansion |

| Ref. | Part Number | Qty. | Description |
|---|---|---|---|
| 90 | 98-9375 | 2 | Pin-Straight |
| 100 | 98-9377 | 2 | Pin-Straight |
| 110 | 98-7506 | 1 | Pin-Pipe |
| 120 | 100-2051 | 2 | Pin-Pipe |
| 130 | 100-2051 | 2 | Pin-Pipe |
| 140 | 100-1991 | 1 | Cover-Fuel, Camshaft |
| 160 | 120-3121 | 1 | Draincock ASM |
| 170 | 98-9416 | 1 | Switch-Oil |

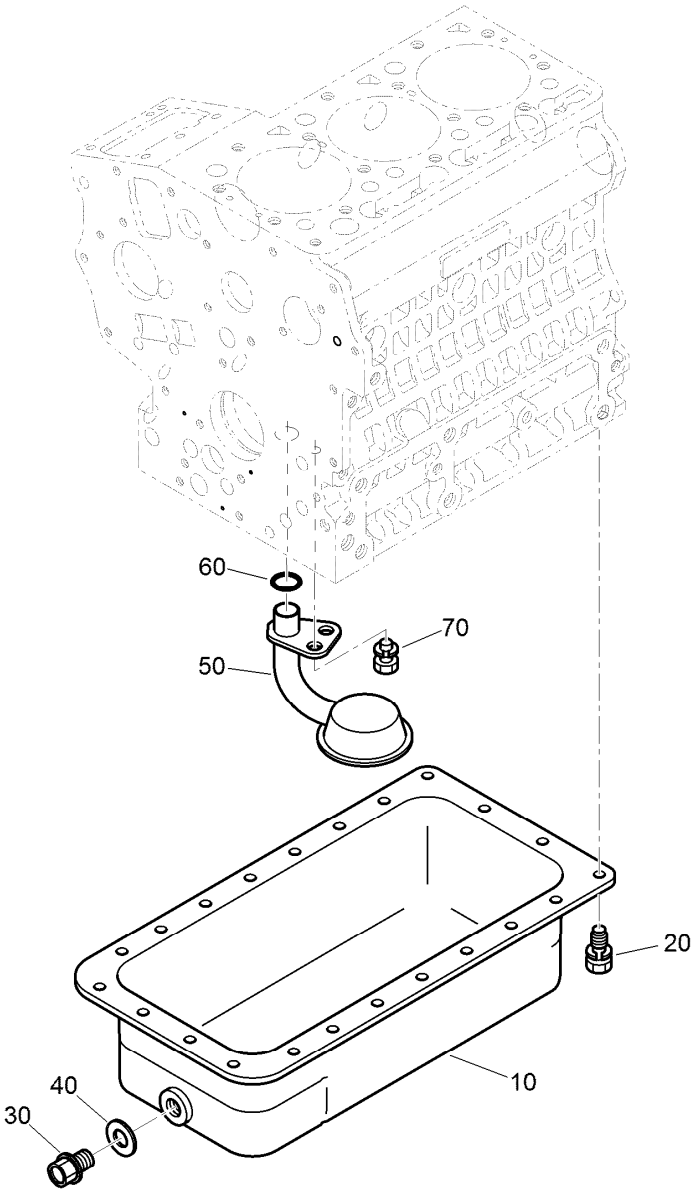


# Oil Pan Assembly

| Ref. | Part Number | Qty. | Description |
|---|---|---|---|
| 10 | 125-9056 | 1 | Oil Pan ASM |
| 20 | 98-9350 | 22 | Bolt |
| 30 | 114-8151 | 1 | Plug-Drain |
| 40 | 98-7524 | 1 | Gasket |
| 50 | 125-9052 | 1 | Tube-Pick Up, Oil |
| 60 | 105-3776 | 1 | O-Ring |
| 70 | 100-9195 | 1 | Bolt |

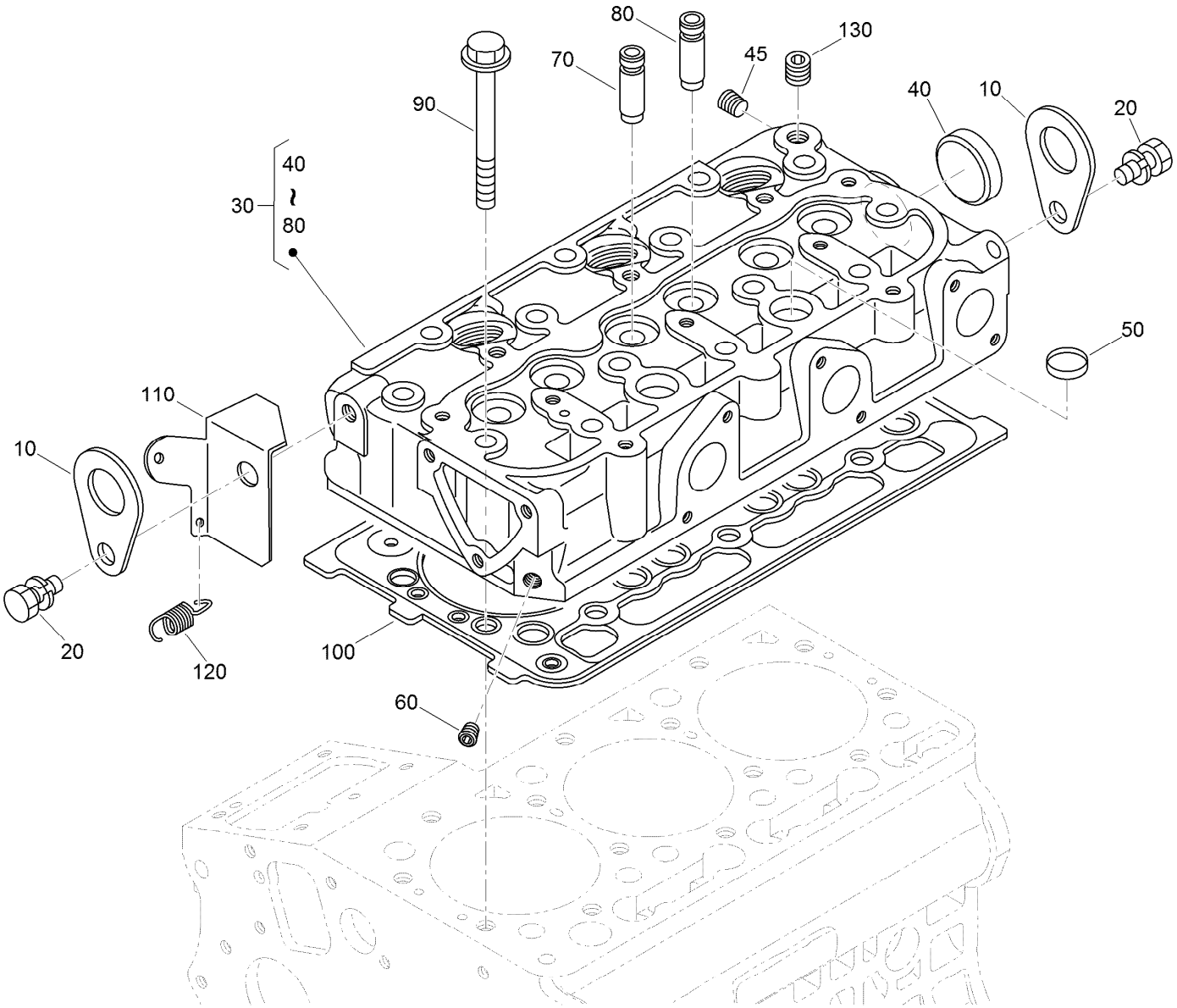


# Cylinder Head Assembly

| Ref. | Part Number | Qty. | Description |
|---|---|---|---|
| 10 | 98-7531 | 2 | Hook-Engine |
| 20 | 98-7526 | 2 | Bolt |
| 30 | 130-1533 | 1 | Cylinder Head ASM |
| 40 | 105-3705 | 1 | Cap-Sealing |
| 45 | 125-9062 | 1 | Plug |
| 50 | 98-9389 | 2 | Cap-Sealing |
| 60 | 98-9687 | 1 | Plug |
| 70 | 100-1882 | 3 | Guide-Valve, Inlet |
| 80 | 100-1883 | 3 | Guide-Valve, Exhaust |
| 90 | 100-1820 | 14 | Bolt-Head, Cylinder |
| 100 | 112-2520 | 1 | Gasket-Head, Cylinder |
| 110 | 121-3810 | 1 | Stay |
| 120 | 121-3820 | 1 | Spring-Return |
| 130 | 98-9444 | 1 | Plug |

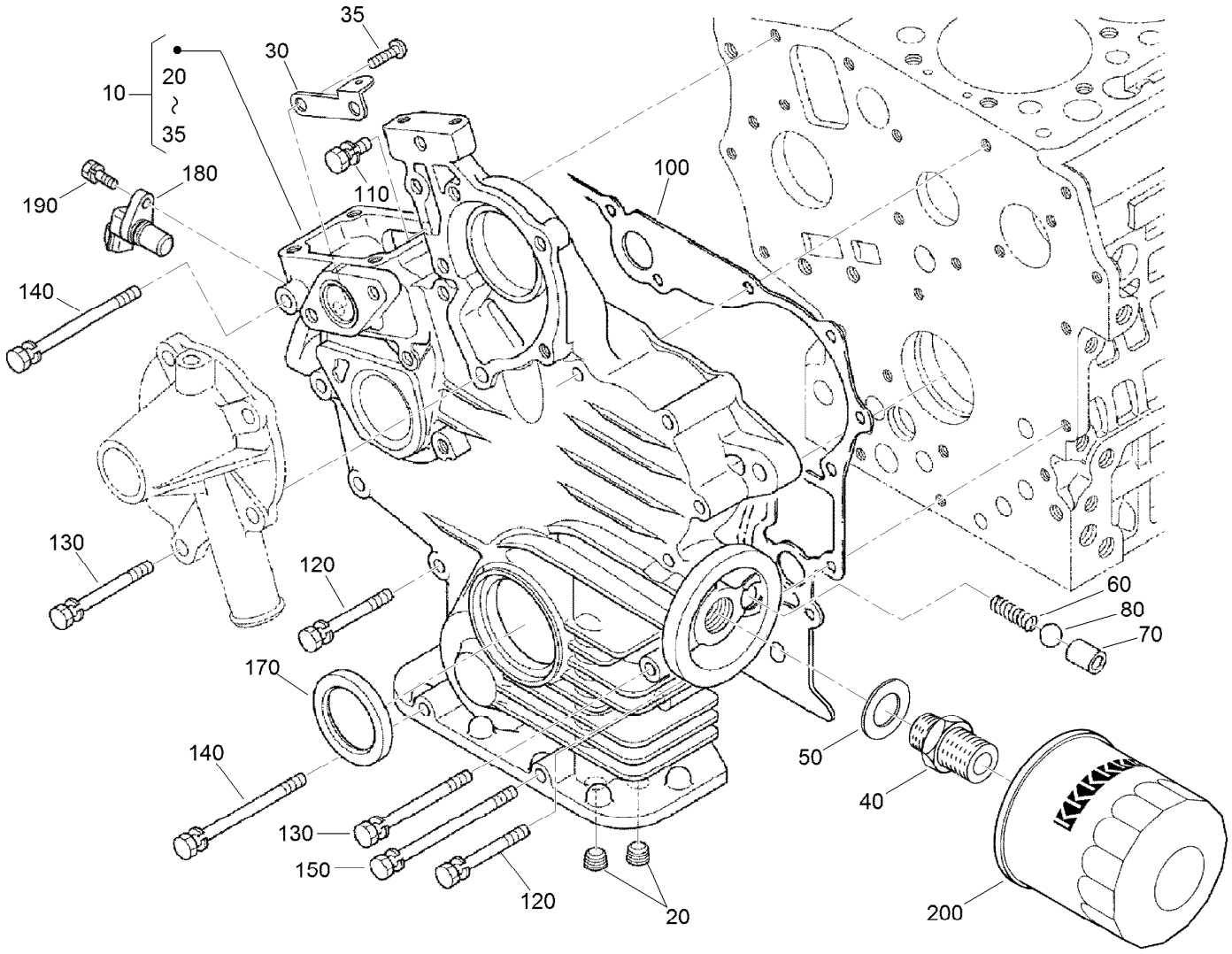


# Gear Case and Oil Filter Cartridge Assembly

| Ref. | Part Number | Qty. | Description |
|---|---|---|---|
| 10 | 125-9057 | 1 | Gear Case ASM |
| 20 | 98-7488 | 2 | Plug |
| 30 | 110-3708 | 1 | Stay-Spring, Start |
| 35 | 100-2040 | 2 | Screw |
| 40 | 98-9388 | 1 | Joint-Pipe |
| 50 | 100-1926 | 1 | Washer-Plain |
| 60 | 100-2004 | 1 | Spring |
| 70 | 100-1894 | 1 | Seat-Valve |
| 80 | 100-1792 | 1 | Ball |
| 100 | 117-0327 | 1 | Gasket-Case, Gear |

| Ref. | Part Number | Qty. | Description |
|---|---|---|---|
| 110 | 127-0403 | 1 | Bolt-Flange |
| 120 | 125-9063 | 9 | Bolt-Sems |
| 130 | 100-1922 | 2 | Bolt |
| 140 | 98-9357 | 2 | Bolt |
| 150 | 110-3710 | 1 | Bolt |
| 170 | 120-7852 | 1 | Seal-Oil |
| 180 | 125-9058 | 1 | Sensor-Revolution |
| 190 | 98-7692 | 1 | Bolt |
| 200 | 115-8189 | 1 | Filter-Oil, Engine |

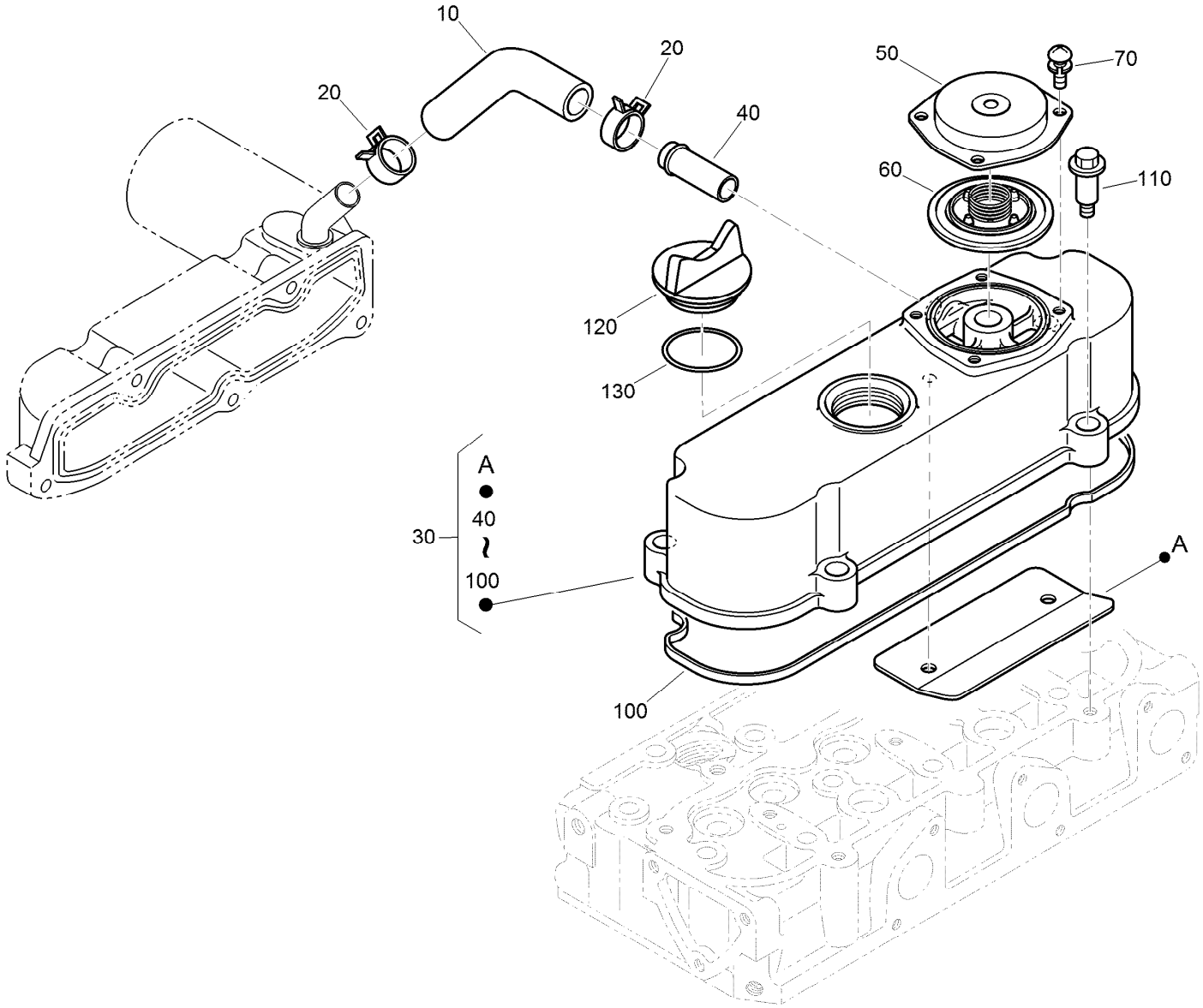


# Cylinder Head Cover Assembly

| Ref. | Part Number | Qty. | Description |
|---|---|---|---|
| 10 | 120-3139 | 1 | Tube-Breather |
| 20 | 110-3712 | 2 | Clamp-Hose |
| 30 | 112-8332 | 1 | Cylinder Head Cover ASM |
| 40 | 98-9580 | 1 | Pipe-Return, Water |
| 50 | 110-3714 | 1 | Cover-Breather |
| 60 | 110-3715 | 1 | Valve-Breather |
| 70 | 98-9364 | 4 | Screw (With Washer) |
| 100 | 112-2521 | 1 | Gasket-Cover, Head |
| 110 | 108-7063 | 4 | Bolt |
| 120 | 107-9075 | 1 | Plug-Filler, Oil |
| 130 | 99-3446 | 1 | O-Ring |

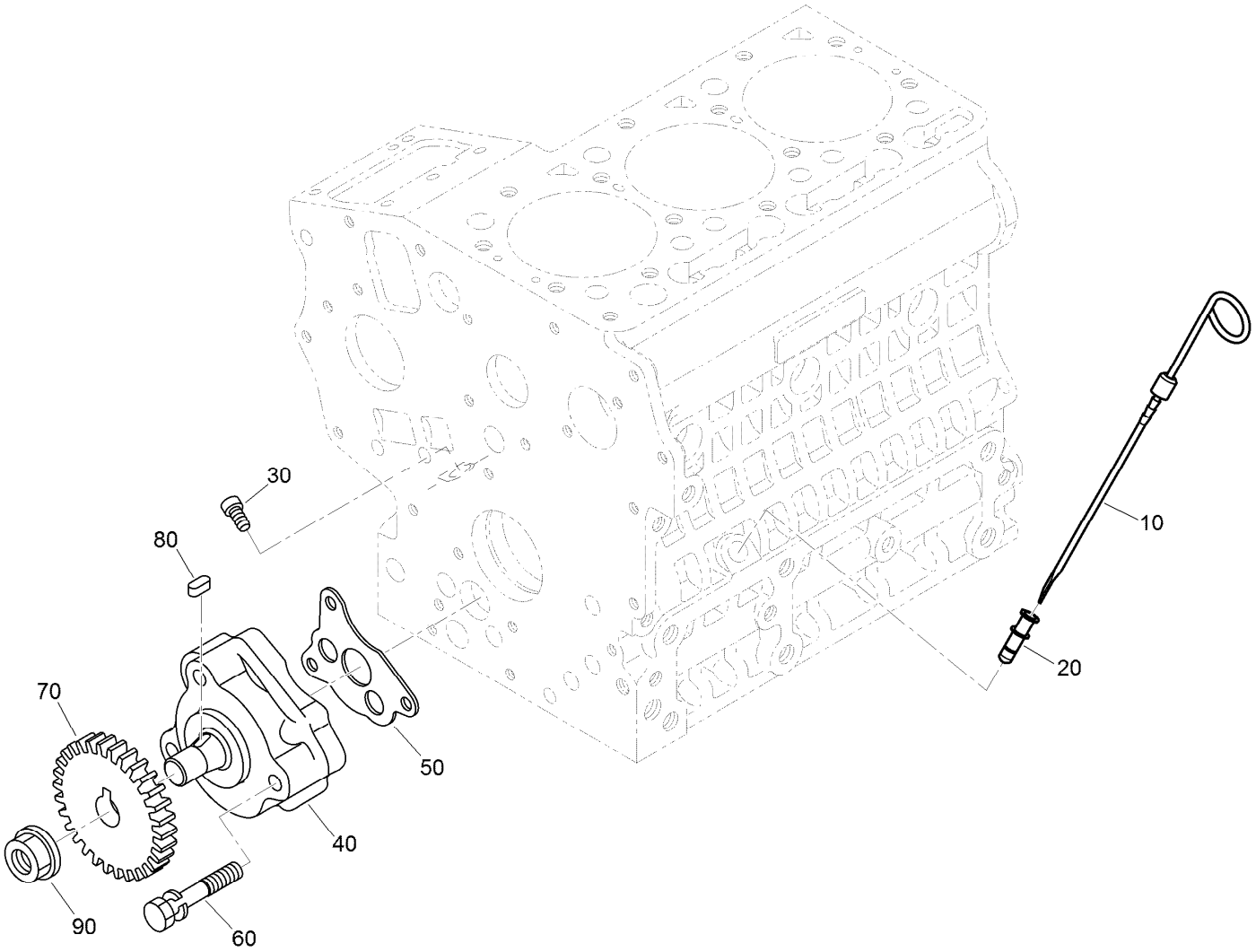


# Oil Pump and Dipstick Assembly

| *Ref.* | *Part Number* | *Qty.* | *Description* |
|---|---|---|---|
| 10 | 110-3719 | 1 | Gauge-Oil |
| 20 | 105-4580 | 1 | Guide-Gauge, Oil |
| 30 | 110-3720 | 1 | Plug-Gauge, Oil |
| 40 | 100-2002 | 1 | Oil Pump ASM |
| 50 | 100-2003 | 1 | Gasket-Pump, Oil |
| 60 | 100-1923 | 3 | Bolt |
| 70 | 130-1419 | 1 | Gear-Drive, Oil Pump |
| 80 | 98-7658 | 1 | Key-Feather |
| 90 | 100-1779 | 1 | Nut-Flange |

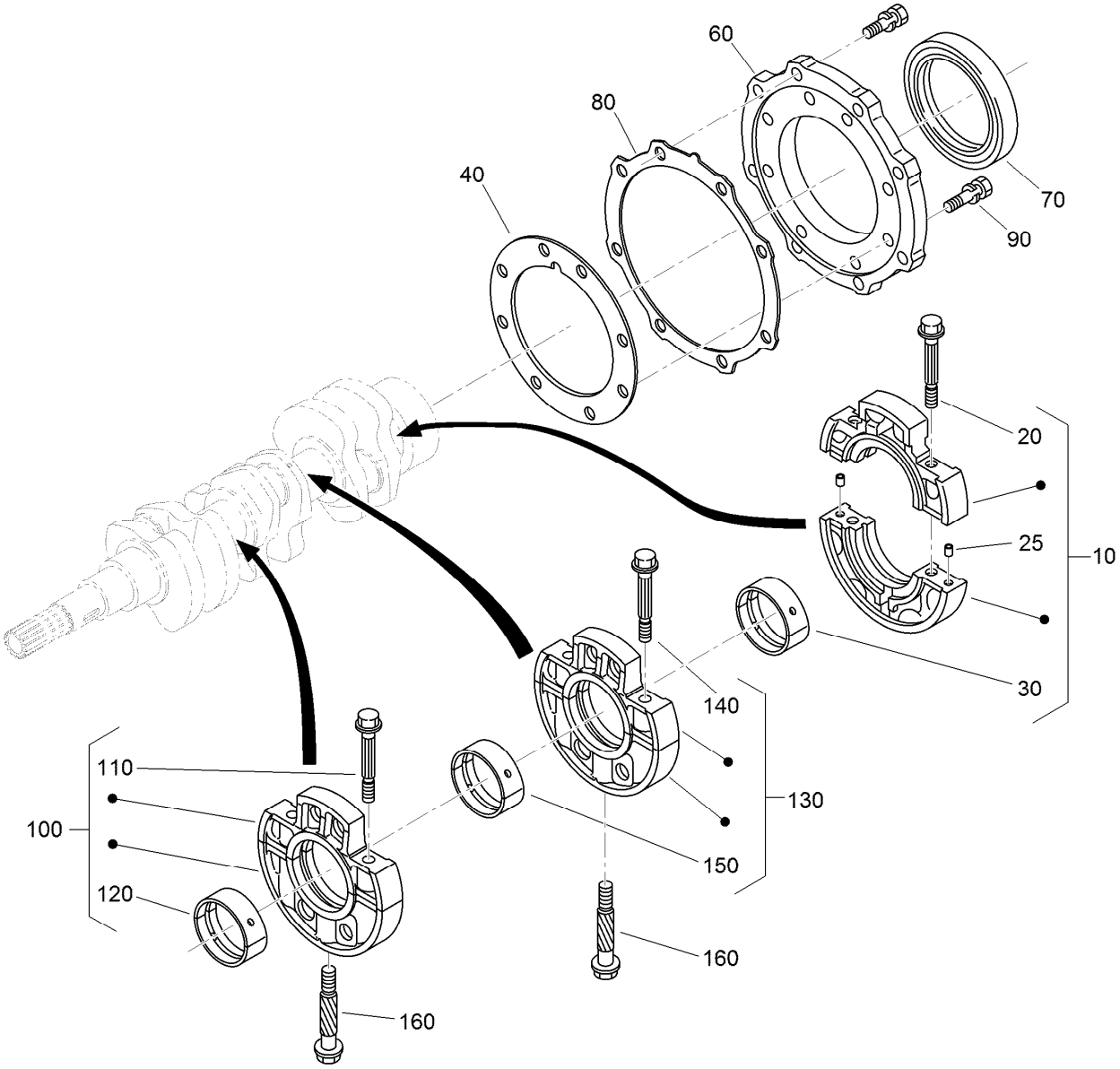


# Main Bearing Case Assembly

| Ref. | Part Number | Qty. | Description |
|---|---|---|---|
| 10 | 125-9064 | 1 | Wheel Bearing Case ASM |
| 20 | 125-9065 | 2 | Bolt-Flange |
| 25 | 125-9082 | 2 | Pin-Straight |
| 30 | 125-9066 | 1 | Crankshaft Metal ASM (STD) |
| 30 | 125-9067 | 1 | Crankshaft Metal ASM (-0.20Mm) |
| 30 | 125-9068 | 1 | Crankshaft Metal ASM (-0.40Mm) |
| 40 | 117-0304 | 1 | Gasket-Case, Bearing |
| 60 | 112-8334 | 1 | Cover-Case, Bearing |
| 70 | 110-3724 | 1 | Seal-Oil |
| 80 | 100-1876 | 1 | Gasket-Cover, Case |
| 90 | 100-1750 | 16 | Bolt |
| 100 | 110-3725 | 1 | Main Bearing Case ASM |
| 110 | 110-3723 | 2 | Bolt-Case, Bearing |

| Ref. | Part Number | Qty. | Description |
|---|---|---|---|
| 120 | 110-3741 | 1 | Crankshaft Metal ASM (STD) |
| 120 | 125-9083 | 1 | Crankshaft Metal ASM (-0.20Mm) |
| 120 | 110-3743 | 1 | Crankshaft Metal ASM (-0.40Mm) |
| 130 | 125-9069 | 1 | Main Case Bearing ASM |
| 140 | 110-3723 | 2 | Bolt-Case, Bearing |
| 150 | 110-3741 | 1 | Crankshaft Metal ASM (STD) |
| 150 | 125-9083 | 1 | Crankshaft Metal ASM (-0.20Mm) |
| 150 | 110-3743 | 1 | Crankshaft Metal ASM (-0.40Mm) |
| 160 | 100-1874 | 2 | Bolt-Case, Bearing |

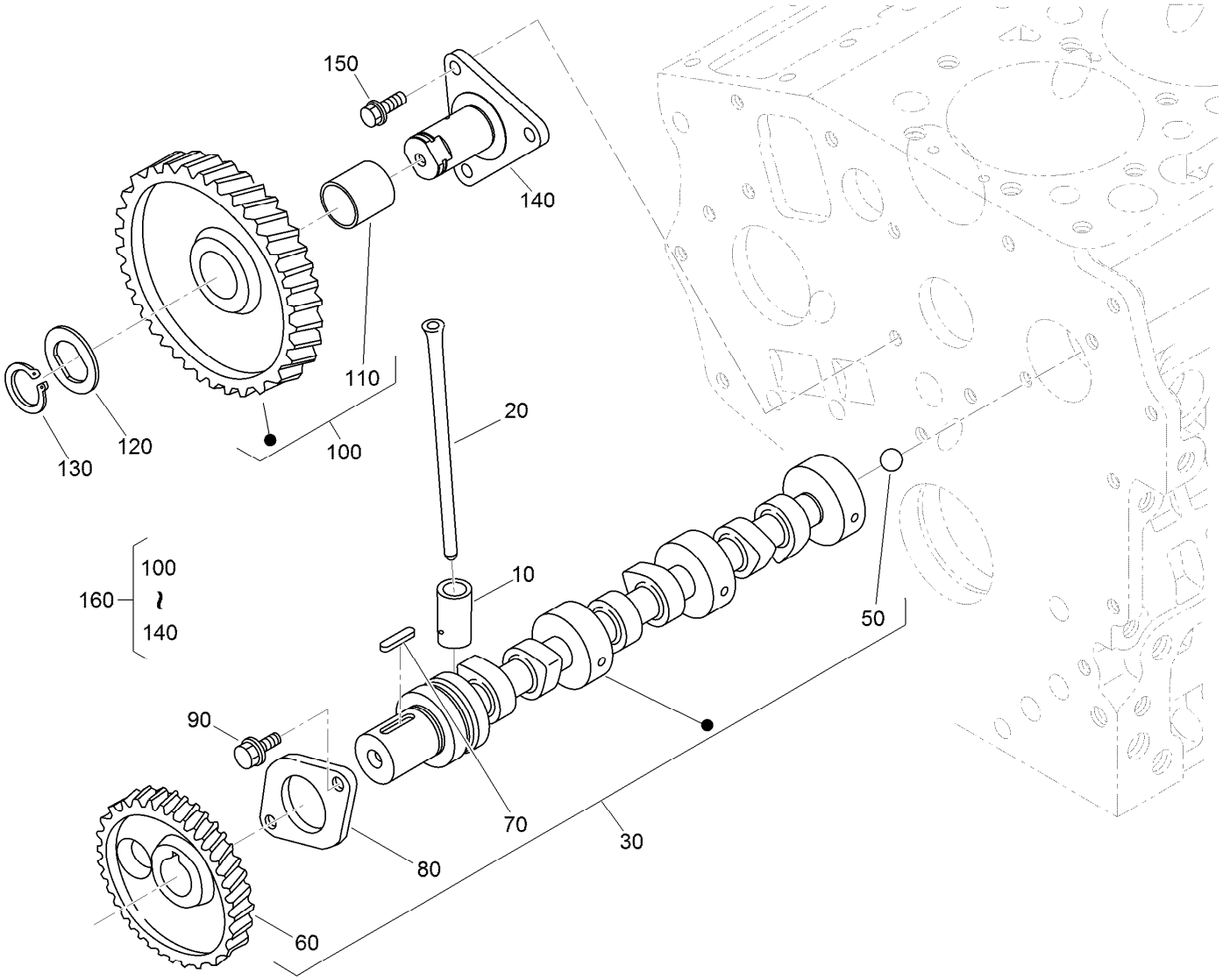


# Camshaft and Idle Gear Shaft Assembly

| Ref. | Part Number | Qty. | Description |
|---|---|---|---|
| 10 | 110-3727 | 6 | Tappet |
| 20 | 100-1989 | 6 | Rod-Push |
| 30 | 117-0305 | 1 | Camshaft ASM |
| 50 | 110-3729 | 1 | Ball |
| 60 | 130-1534 | 1 | Gear-Cam |
| 70 | 98-9378 | 1 | Key-Feather |
| 80 | 100-1887 | 1 | Stopper-Camshaft |
| 90 | 98-9350 | 2 | Bolt |
| 100 | 121-2421 | 1 | Idle Gear ASM |
| 110 | 121-2422 | 1 | Bushing |
| 120 | 100-1970 | 1 | Collar-Gear, Idle |
| 130 | 100-1969 | 1 | Ring-Snap |
| 140 | 100-1967 | 1 | Shaft-Gear, Idle |
| 150 | 100-1774 | 3 | Bolt-Flange |
| 160 | 100-2240 | 1 | Idle Gear ASM |

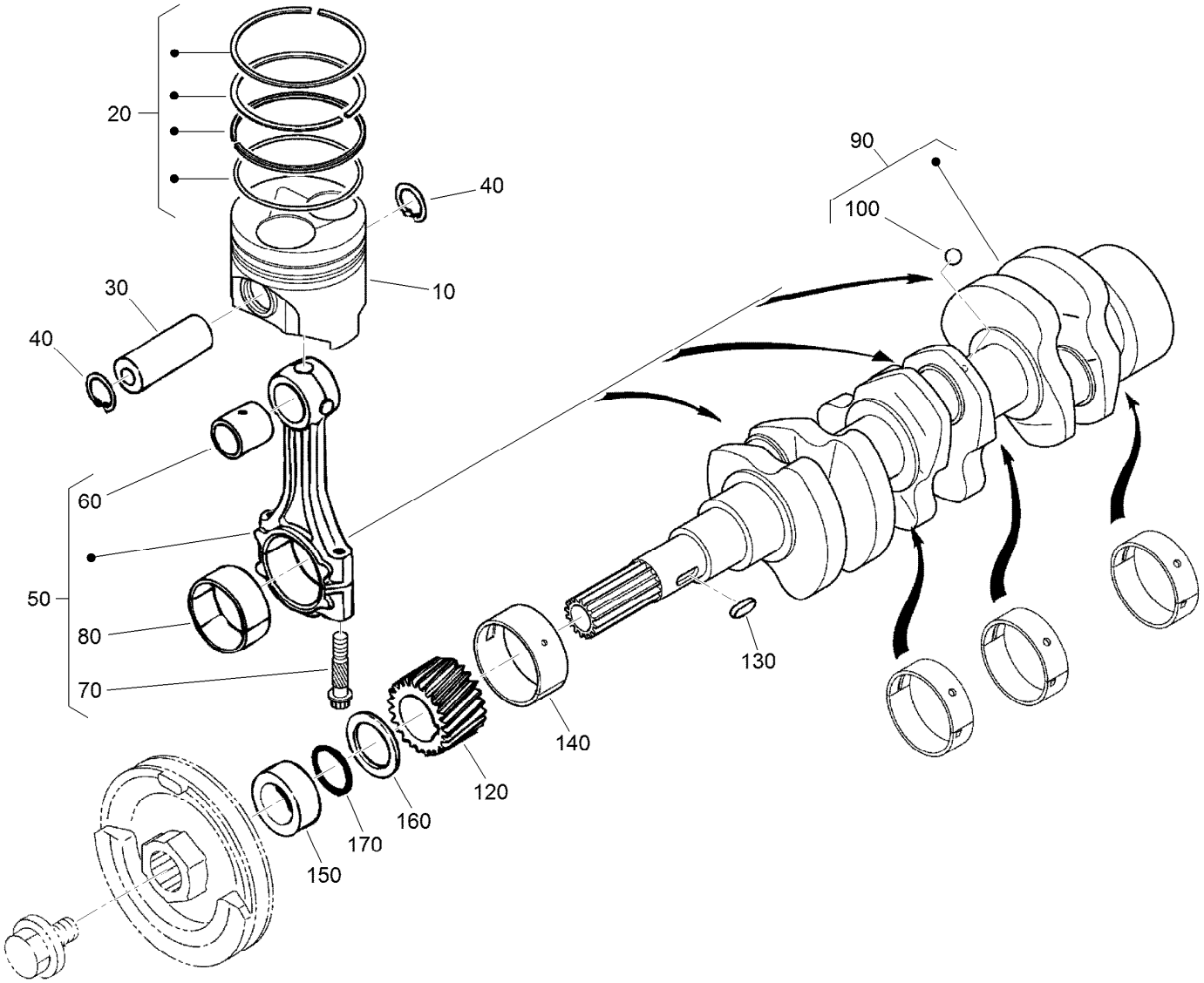


# Piston and Crankshaft Assembly

| Ref. | Part Number | Qty. | Description |
|---|---|---|---|
| 10 | 130-1537 | 3 | Piston |
| 10 | 130-1540 | 3 | Piston |
| 20 | 130-1535 | 3 | Piston Ring ASM |
| 20 | 130-1536 | 3 | Piston Ring ASM |
| 30 | 110-3734 | 3 | Pin-Piston |
| 40 | 100-1835 | 6 | Circlip-Internal |
| 50 | 125-9070 | 3 | Connecting Rod ASM |
| 60 | 110-3736 | 3 | Bushing-Pin, Piston |
| 70 | 100-1999 | 6 | Bolt-Rod, Connecting |
| 80 | 100-2000 | 6 | Metal-Crankpin (STD) |
| 80 | 121-3849 | 3 | Metal-Crankpin (-.20Mm) |

| Ref. | Part Number | Qty. | Description |
|---|---|---|---|
| 80 | 121-2420 | 3 | Metal-Crankpin (-.40Mm) |
| 90 | 117-0308 | 1 | Crankshaft |
| 100 | 100-1791 | 3 | Ball |
| 120 | 100-1891 | 1 | Gear-Crankshaft |
| 130 | 100-1752 | 1 | Key-Feather |
| 140 | 110-3738 | 1 | Metal-Crankshaft (STD) |
| 140 | 121-2424 | 1 | Metal-Crankshaft (-.20Mm) |
| 140 | 121-2425 | 1 | Metal-Crankshaft (-.40Mm) |
| 150 | 100-1890 | 1 | Collar-Crankshaft |
| 160 | 100-1974 | 1 | Slinger-Oil |
| 170 | 100-2209 | 1 | O-Ring |

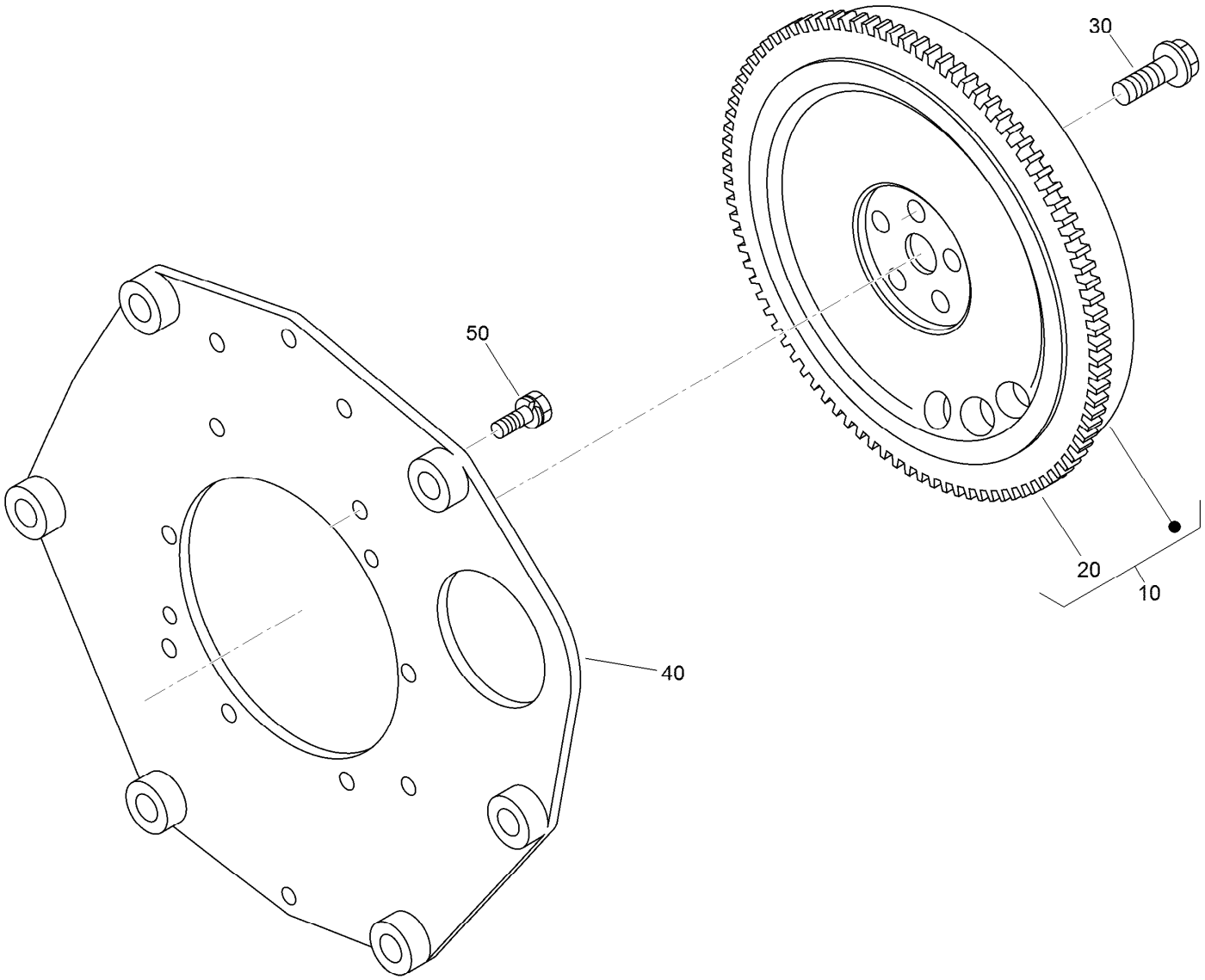


# Flywheel Assembly

| Ref. | Part Number | Qty. | Description |
|---|---|---|---|
| 10 | 125-9054 | 1 | Flywheel ASM |
| 20 | 105-3722 | 1 | Gear-Ring |
| 30 | 125-9051 | 5 | Bolt-Flywheel |
| 40 | 125-9053 | 1 | Plate-Rear End |
| 50 | 110-3754 | 10 | Bolt |

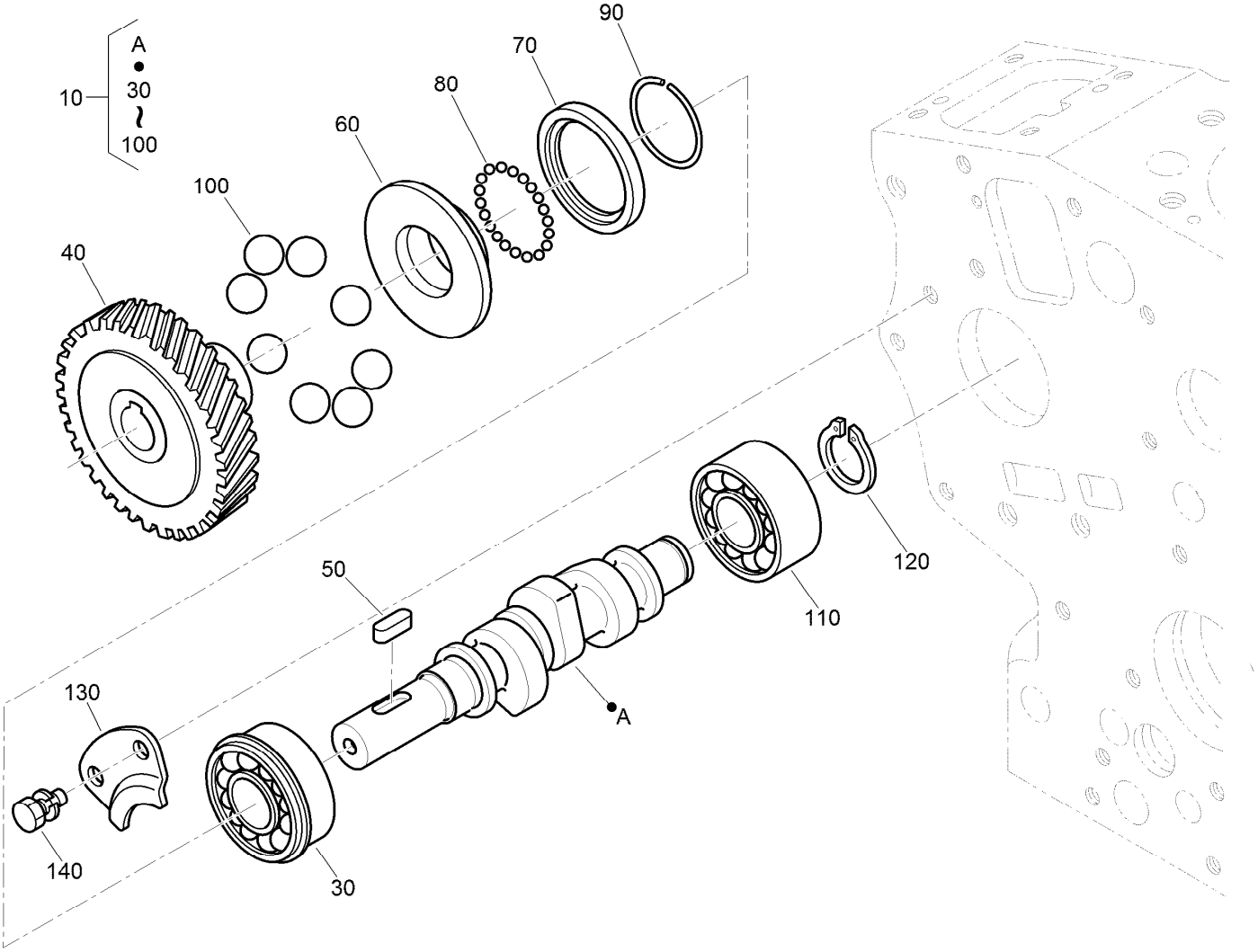


# Fuel Camshaft Assembly

| Ref. | Part Number | Qty. | Description |
|---|---|---|---|
| 10 | 125-9075 | 1 | Fuel Camshaft ASM |
| 30 | 100-1795 | 1 | Bearing-Ball |
| 40 | 100-2006 | 1 | Gear-Pump, Injection |
| 50 | 100-1752 | 1 | Key-Feather |
| 60 | 112-8336 | 1 | Sleeve-Governor |
| 70 | 100-1904 | 1 | Case-Ball, Governor |
| 80 | 100-1790 | 32 | Ball |
| 90 | 100-1843 | 1 | Circ-Clip |
| 100 | 100-1793 | 8 | Ball |
| 110 | 110-3757 | 1 | Bearing-Ball |
| 120 | 100-1784 | 1 | Circ-Clip, External |
| 130 | 100-1888 | 1 | Stopper-Fuel, Camshaft |
| 140 | 98-9350 | 2 | Bolt |

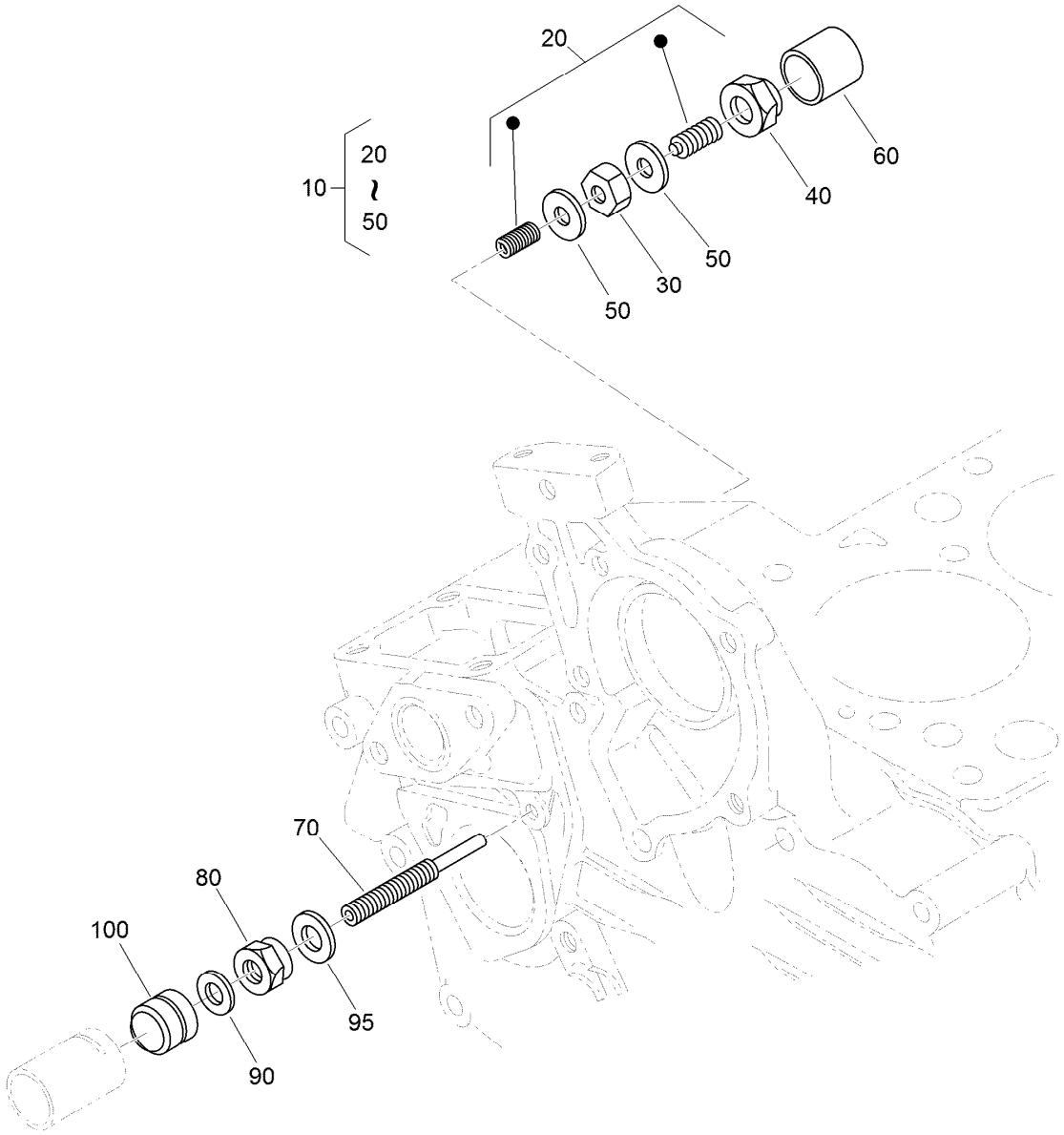


# Idle Apparatus Assembly

| Ref. | Part Number | Qty. | Description |
|---|---|---|---|
| 10 | 100-1898 | 1 | Idle Apparatus ASM |
| 20 | 100-1899 | 1 | Adjusting Bolt ASM |
| 30 | 100-1846 | 1 | Nut |
| 40 | 100-1901 | 1 | Nut-Cap |
| 50 | 98-7428 | 2 | Gasket |
| 60 | 100-1902 | 1 | Cap |
| 70 | 110-3758 | 1 | Bolt-Adjusting |
| 80 | 100-2175 | 1 | Nut-Lock |
| 90 | 98-7654 | 1 | Gasket |
| 95 | 107-9081 | 1 | Gasket |
| 100 | 99-8387 | 1 | Nut-Cap |

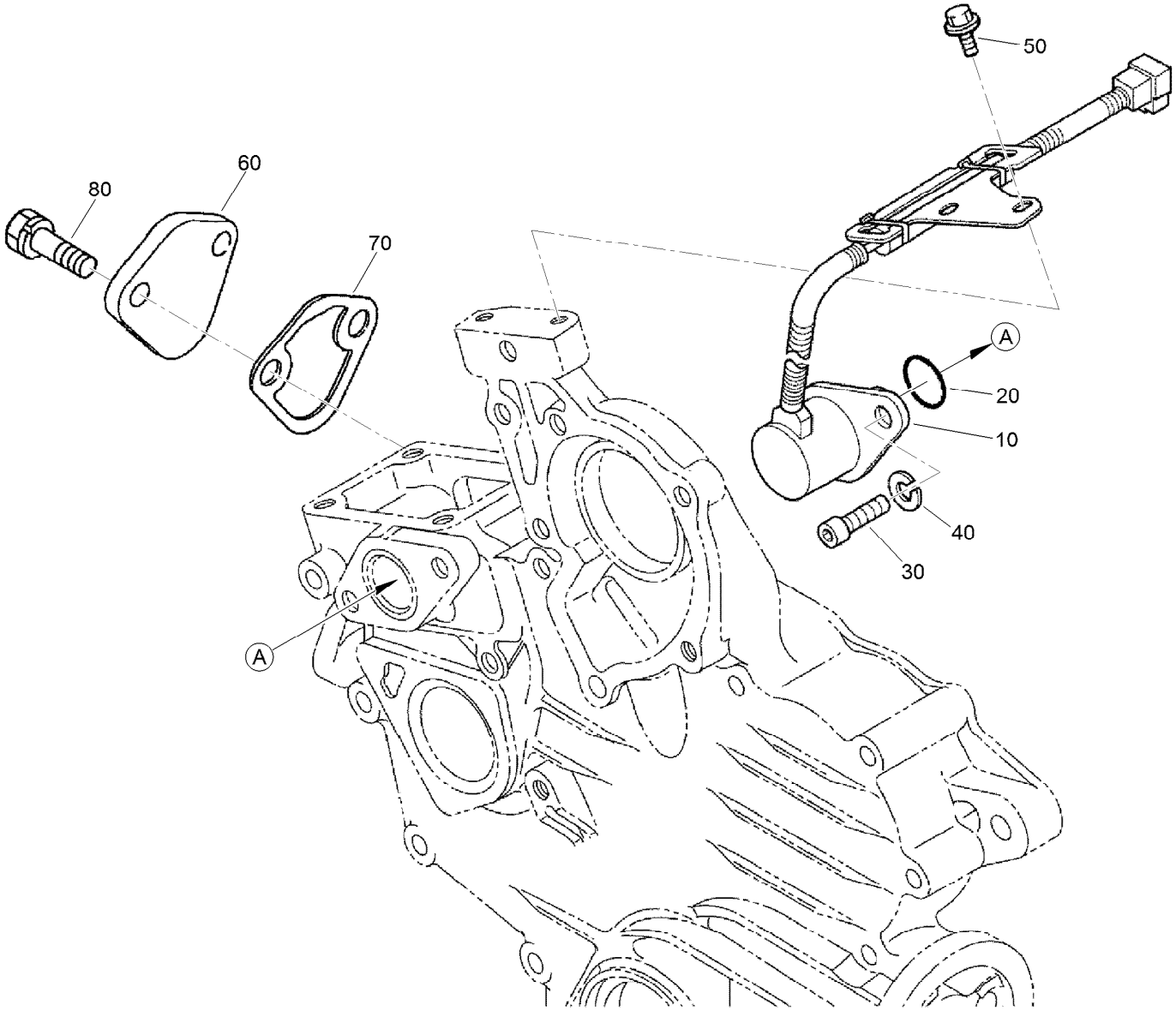


# Stop Solenoid and Fuel Pump Cover Assembly

| *Ref.* | *Part Number* | *Qty.* | *Description* |
|---|---|---|---|
| 10 | 117-2719 | 1 | Solenoid Stop ASM |
| 20 | 110-3762 | 1 | O-Ring |
| 30 | 110-3763 | 2 | Bolt-HSH |
| 40 | 98-7699 | 1 | Washer-Spring |
| 50 | 100-1774 | 2 | Bolt-Flange |
| 60 | 99-3514 | 1 | Cover |
| 70 | 98-9636 | 1 | Gasket-Pump, Fuel |
| 80 | 98-7692 | 2 | Bolt |

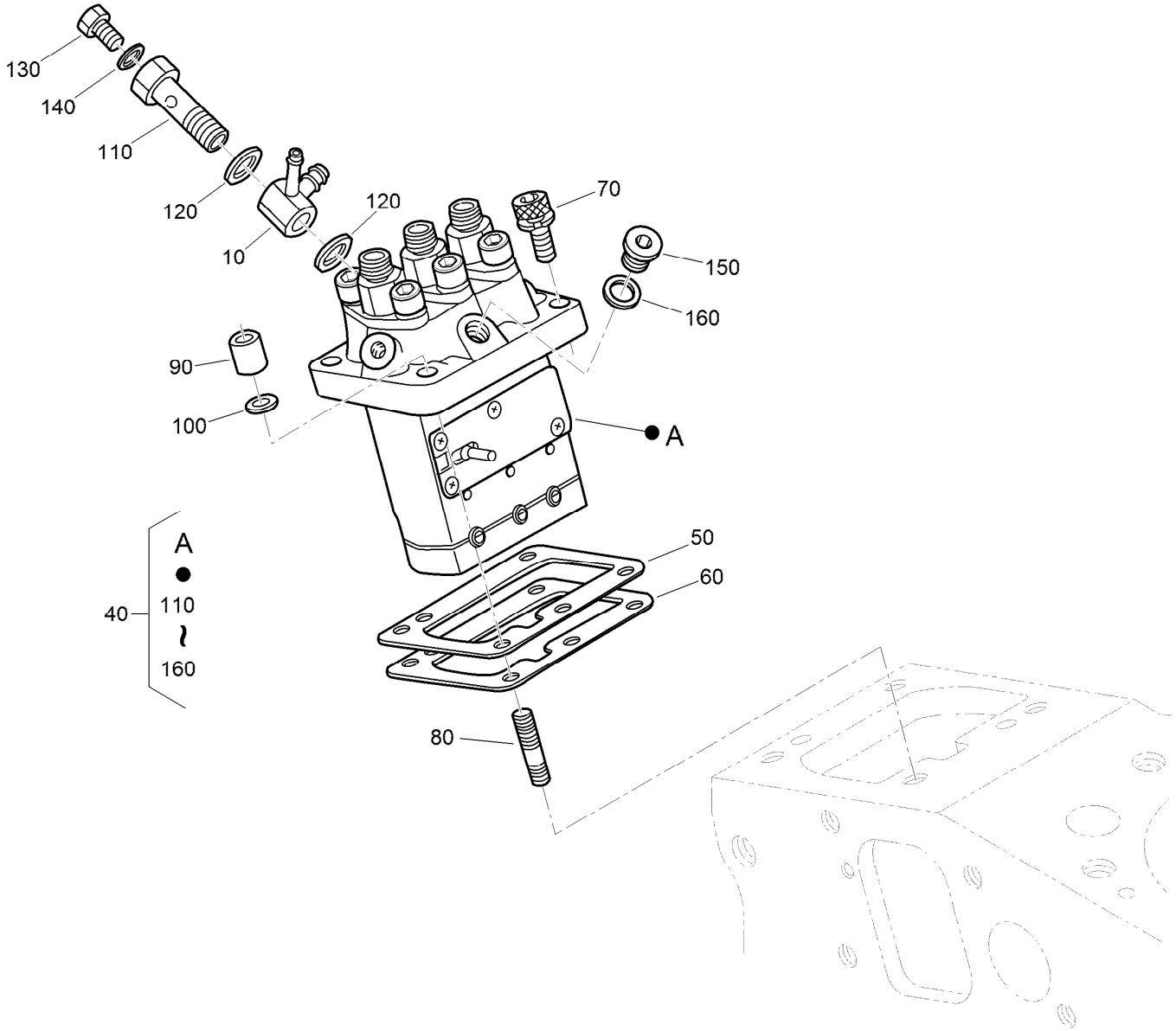


# Injection Pump Assembly

| Ref. | Part Number | Qty. | Description |
|---|---|---|---|
| 10 | 110-3764 | 1 | Joint |
| 40 | 110-3765 | 1 | Injection Pump ASM |
| 50 | 115-3045 | 1 | Shim-Injection (0.175Mm) |
| 50 | 98-9456 | 1 | Shim-Injection (0.20Mm) |
| 50 | 98-9457 | 1 | Shim-Injection (0.25Mm) |
| 60 | 98-9458 | 1 | Shim-Injection (0.30Mm) |
| 60 | 115-3046 | 1 | Shim-Injection (0.35Mm) |
| 70 | 117-7564 | 2 | Bolt-Hex Soc HD |
| 80 | 98-9438 | 2 | Stud |

| Ref. | Part Number | Qty. | Description |
|---|---|---|---|
| 90 | 98-9440 | 2 | Nut-Cap |
| 100 | 98-7699 | 2 | Washer-Spring |
| 110 | 100-1896 | 1 | Screw-Hollow |
| 120 | 98-9445 | 2 | Gasket |
| 130 | 98-9430 | 1 | Screw |
| 140 | 98-9446 | 1 | Gasket |
| 150 | 98-9466 | 1 | Plug |
| 160 | 98-9451 | 1 | Gasket |

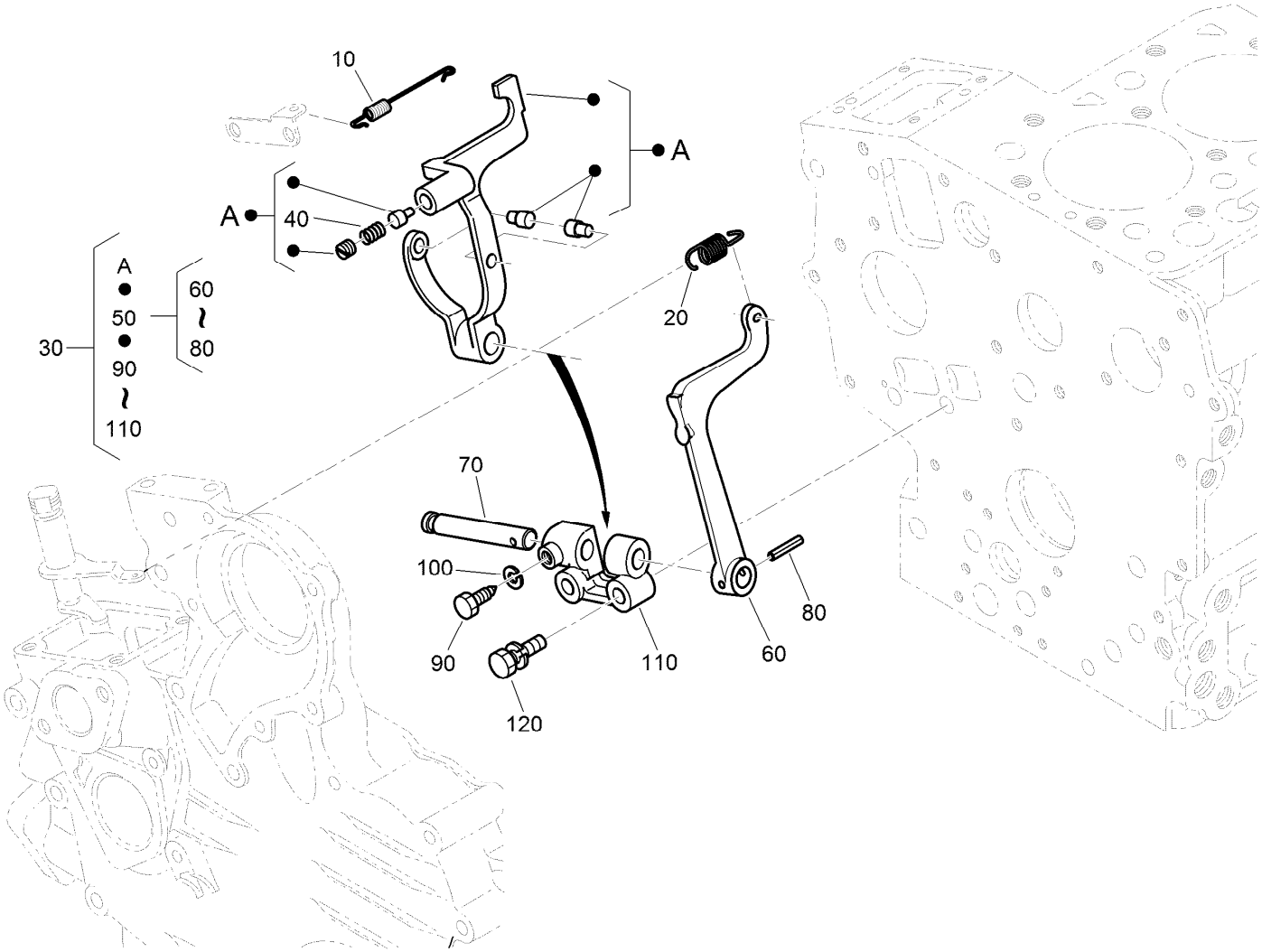


# Governor Assembly

| Ref. | Part Number | Qty. | Description |
|---|---|---|---|
| 10 | 110-3766 | 1 | Spring-Start |
| 20 | 110-3767 | 1 | Spring-Governor |
| 30 | 130-1368 | 1 | Fork Lever ASM |
| 40 | 117-0313 | 1 | Spring |
| 50 | 100-1905 | 1 | Fork Lever ASM |
| 60 | 100-1907 | 1 | Lever-Fork |
| 70 | 100-1908 | 1 | Shaft-Lever, Fork |
| 80 | 100-1751 | 1 | Pin-Spring |
| 90 | 100-1845 | 1 | Bolt |
| 100 | 127-0408 | 1 | Washer-Lock, Spring |
| 110 | 100-1909 | 1 | Holder-Lever, Fork |
| 120 | 100-1763 | 2 | Bolt |

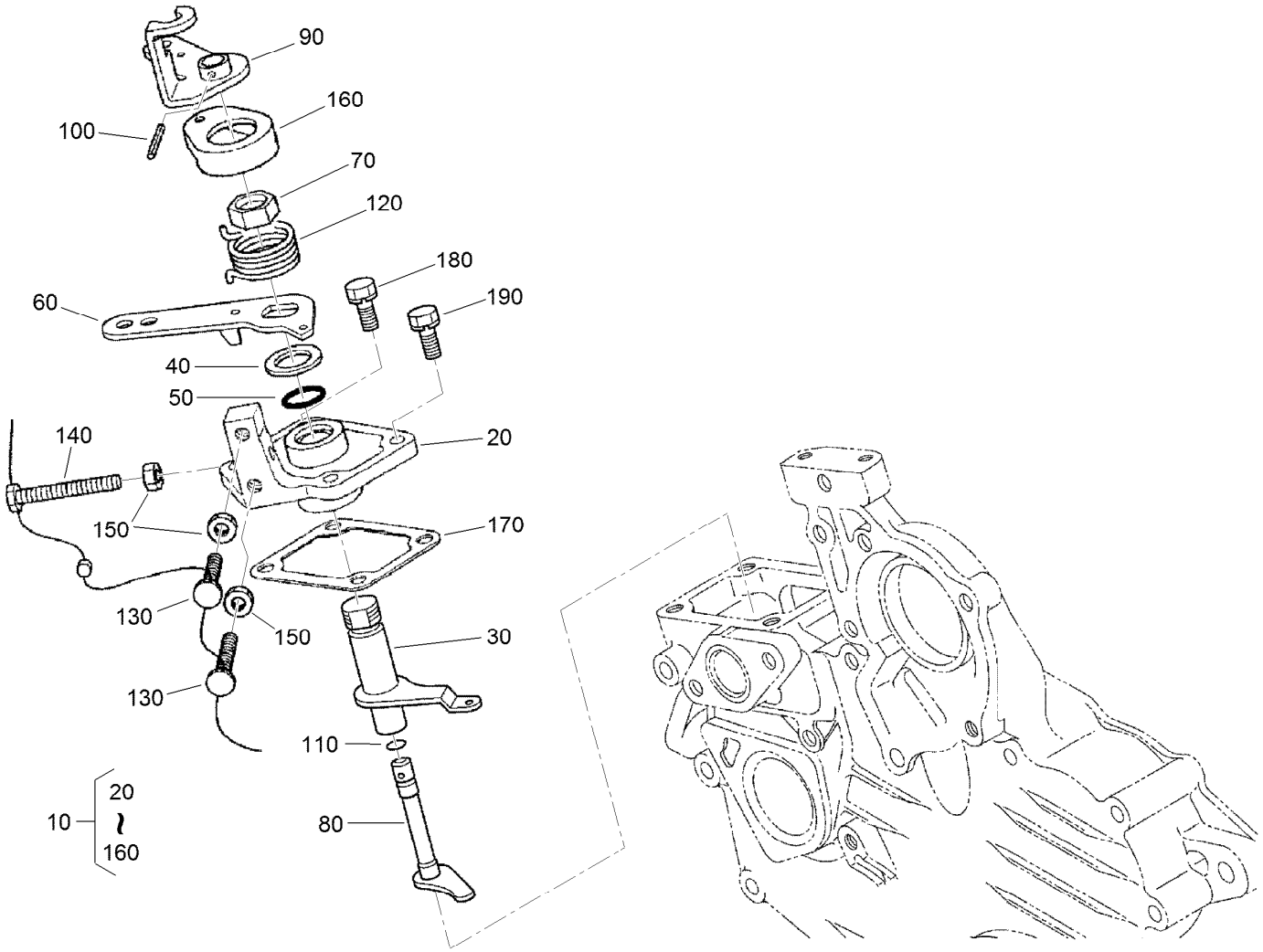


# Speed Control Plate Assembly

| Ref. | Part Number | Qty. | Description |
|---|---|---|---|
| 10 | 110-3769 | 1 | Speed Control Plate ASM |
| 20 | 110-3770 | 1 | Plate-Control, Speed |
| 30 | 110-3771 | 1 | Lever-Governor |
| 40 | 110-3772 | 1 | Collar |
| 50 | 100-2208 | 1 | O-Ring |
| 60 | 110-3773 | 1 | Lever-Control, Speed |
| 70 | 110-3774 | 1 | Nut-Control, Speed |
| 80 | 110-3775 | 1 | Shaft-Lever |
| 90 | 110-3776 | 1 | Lever-Stop, Engine |
| 100 | 110-3777 | 1 | Pin-Spring |

| Ref. | Part Number | Qty. | Description |
|---|---|---|---|
| 110 | 100-2207 | 1 | O-Ring |
| 120 | 110-3778 | 1 | Spring-Return |
| 130 | 120-3133 | 2 | Screw-Stopper |
| 140 | 120-3134 | 1 | Bolt |
| 150 | 98-7572 | 3 | Nut |
| 160 | 110-3779 | 1 | Cap |
| 170 | 100-1962 | 1 | Gasket-Plate, Control |
| 180 | 127-0403 | 2 | Bolt-Flange |
| 190 | 112-2507 | 2 | Bolt |

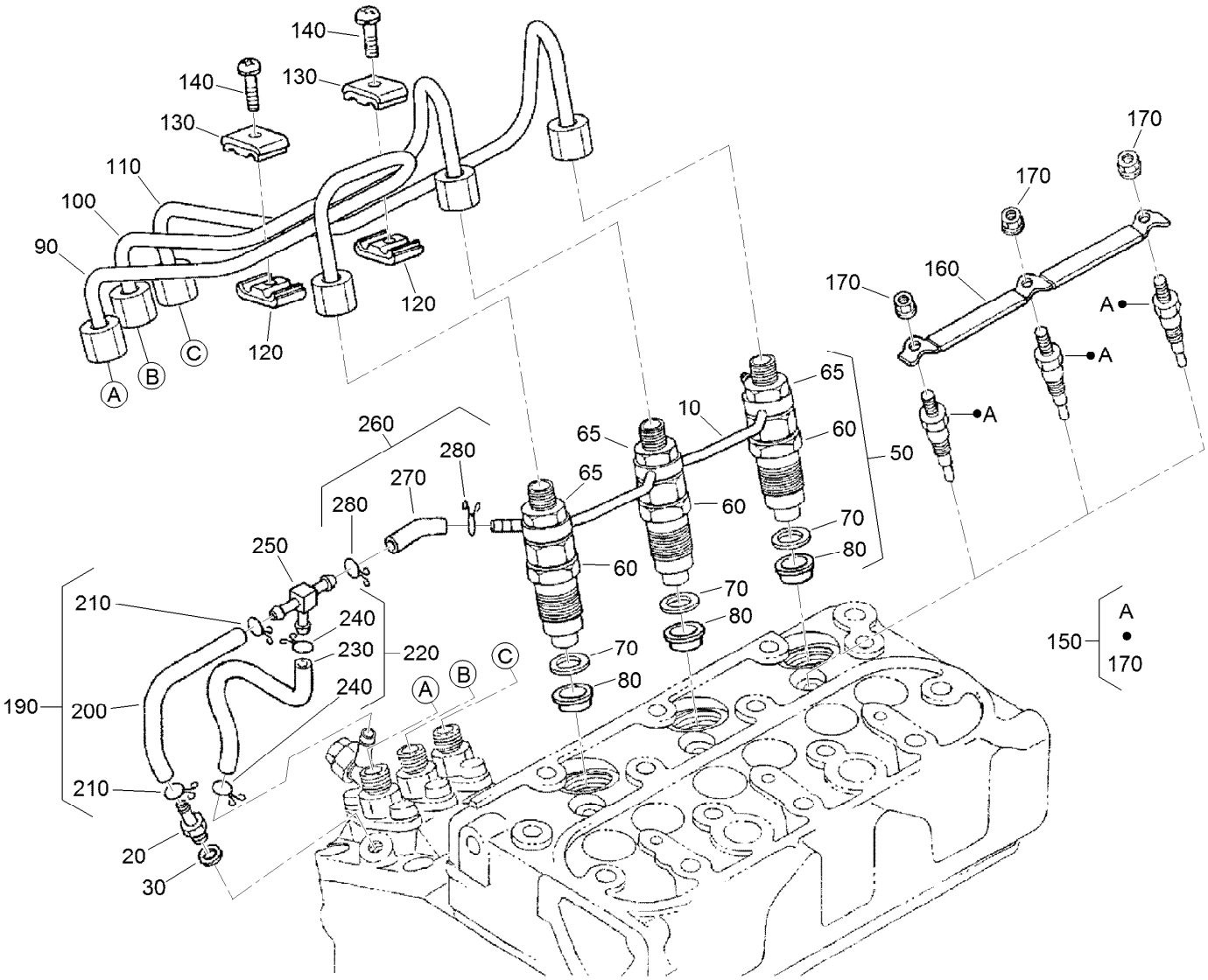


# Nozzle Holder and Glow Plug Assembly

| Ref. | Part Number | Qty. | Description |
|---|---|---|---|
| 10 | 110-3780 | 1 | Over Flow Pipe ASM |
| 20 | 98-9431 | 1 | Screw-Bleeder, Air |
| 30 | 98-7654 | 1 | Gasket |
| 50 | 130-1305 | 3 | Nozzle Holder Kit |
| 60 | 130-1303 | 3 | Nozzle Holder ASM |
| 65 | 121-2411 | 3 | Nut |
| 70 | 98-7676 | 3 | Gasket |
| 80 | 98-7677 | 3 | Seal-Heat |
| 90 | 130-1522 | 1 | Pipe-Injection |
| 100 | 130-1523 | 1 | Pipe-Injection |
| 110 | 130-1541 | 1 | Pipe-Injection |
| 120 | 98-7682 | 2 | Clamp-Pipe |
| 130 | 98-7683 | 2 | Clamp-Pipe |
| 140 | 98-7684 | 2 | Screw (W/Washer) |

| Ref. | Part Number | Qty. | Description |
|---|---|---|---|
| 150 | 130-1411 | 3 | Plug-Glow |
| 160 | 110-3784 | 1 | Cord-Plug, Glow |
| 170 | 99-8377 | 3 | Nut-Flange |
| 190 | 110-3785 | 1 | Fuel Tube ASM |
| 200 | 110-3786 | 1 | Tube-Fuel |
| 210 | 98-7671 | 2 | Clip-Pipe |
| 220 | 110-3787 | 1 | Fuel Tube ASM |
| 230 | 110-3788 | 1 | Tube-Fuel |
| 240 | 98-7671 | 2 | Clip-Pipe |
| 250 | 112-8338 | 1 | Pipe-Joint, T |
| 260 | 110-3790 | 1 | Fuel Tube ASM |
| 270 | 110-3791 | 1 | Tube-Fuel |
| 280 | 98-7671 | 2 | Clip-Pipe |

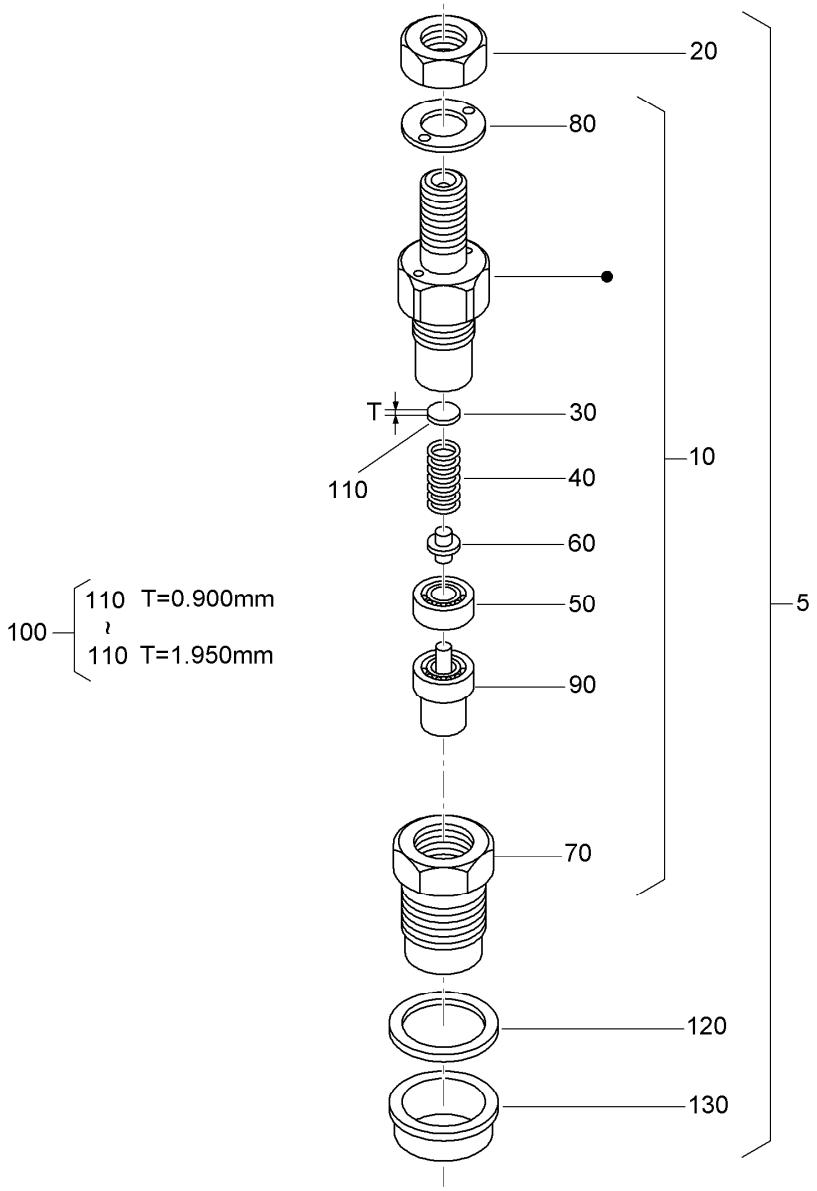


# Nozzle Holder Assembly

| Ref. | Part Number | Qty. | Description |
|---|---|---|---|
| 5 | 130-1305 | 3 | Nozzle Holder Kit |
| 10 | 130-1303 | 3 | Nozzle Holder ASM |
| 20 | 121-2411 | 3 | Nut |
| 30 | 99-8302 | 3 | Washer-Adjusting |
| 40 | 99-8303 | 3 | Spring-Nozzle |
| 50 | 99-8304 | 3 | Spacer-Distance |
| 60 | 99-8305 | 3 | Rod-Push |
| 70 | 130-1304 | 3 | Nut-Nozzle |
| 80 | 99-8307 | 3 | Washer-Plain |
| 90 | 130-1497 | 3 | Nozzle-Piece |
| 100 | 98-9448 | 3 | Adjusting Washer ASM |
| 110 | 98-7642 | 3 | Washer-Adjusting (0.900Mm) |
| 110 | 98-7841 | 3 | Washer-Adjusting (0.925Mm) |
| 110 | 98-7842 | 3 | Washer-Adjusting (0.950Mm) |
| 110 | 98-7843 | 3 | Washer-Adjusting (0.975Mm) |
| 110 | 98-7844 | 3 | Washer-Adjusting (1.000Mm) |
| 110 | 98-7845 | 3 | Washer-Adjusting (1.025Mm) |
| 110 | 98-7846 | 3 | Washer-Adjusting (1.050Mm) |
| 110 | 98-7847 | 3 | Washer-Adjusting (1.075Mm) |
| 110 | 98-7848 | 3 | Washer-Adjusting (1.100Mm) |
| 110 | 98-7849 | 3 | Washer-Adjusting (1.125Mm) |
| 110 | 98-7850 | 3 | Washer-Adjusting (1.150Mm) |
| 110 | 98-7851 | 3 | Washer-Adjusting (1.175Mm) |
| 110 | 98-7852 | 3 | Washer-Adjusting (1.200Mm) |
| 110 | 98-7853 | 3 | Washer-Adjusting (1.225Mm) |
| 110 | 98-7854 | 3 | Washer-Adjusting (1.250Mm) |

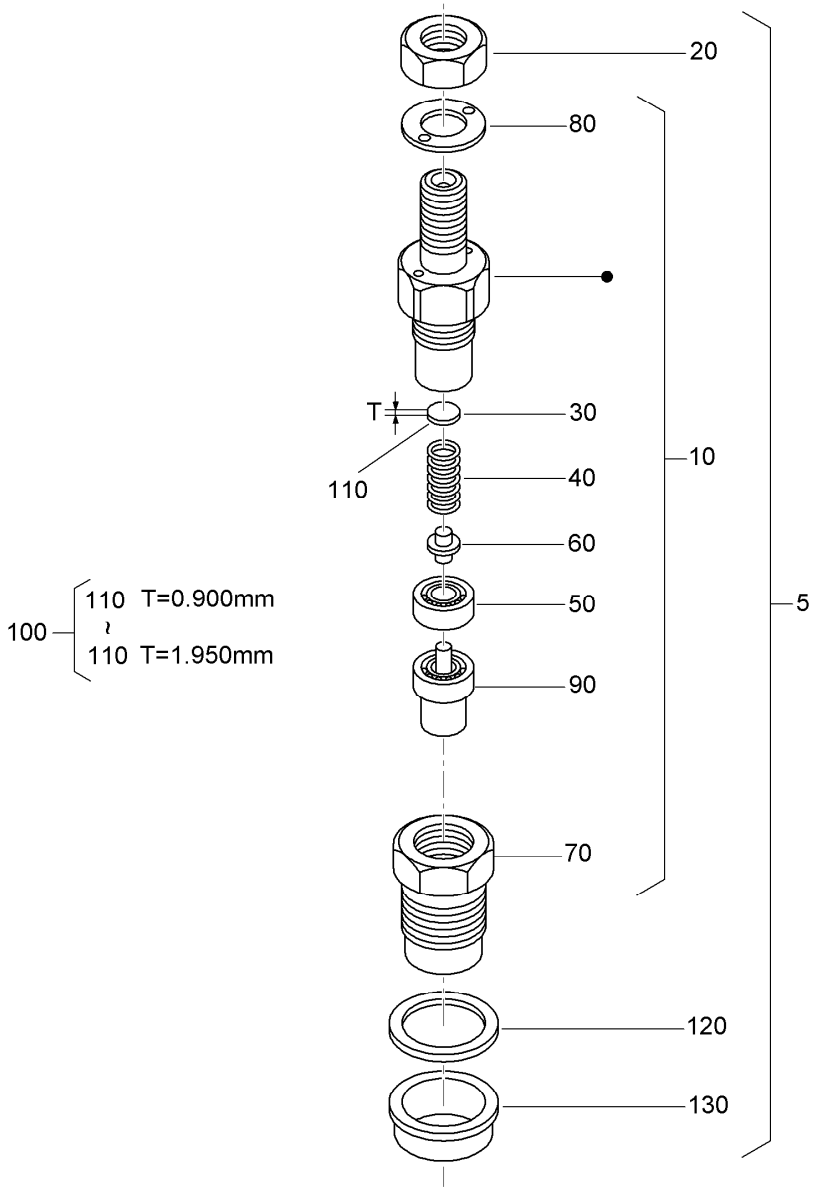


# Nozzle Holder Assembly (continued)

| Ref. | Part Number | Qty. | Description |
|---|---|---|---|
| 110 | 98-7855 | 3 | Washer-Adjusting (1.275Mm) |
| 110 | 98-7856 | 3 | Washer-Adjusting 1.300Mm) |
| 110 | 98-7857 | 3 | Washer-Adjusting (1.325Mm) |
| 110 | 98-7858 | 3 | Washer-Adjusting (1.350Mm) |
| 110 | 98-7859 | 3 | Washer-Adjusting (1.375Mm) |
| 110 | 98-7860 | 3 | Washer-Adjusting (1.400Mm) |
| 110 | 98-7861 | 3 | Washer-Adjusting (1.425Mm) |
| 110 | 98-7862 | 3 | Washer-Adjusting (1.450Mm) |
| 110 | 98-7863 | 3 | Washer-Adjusting (1.475Mm) |
| 110 | 98-7864 | 3 | Washer-Adjusting (1.500Mm) |

| Ref. | Part Number | Qty. | Description |
|---|---|---|---|
| 110 | 98-7865 | 3 | Washer-Adjusting (1.525Mm) |
| 110 | 98-7866 | 3 | Washer-Adjusting (1.550Mm) |
| 110 | 98-7867 | 3 | Washer-Adjusting (1.575Mm) |
| 110 | 98-7868 | 3 | Washer-Adjusting (1.600Mm) |
| 110 | 98-7869 | 3 | Washer-Adjusting (1.625Mm) |
| 110 | 98-7870 | 3 | Washer-Adjusting (1.650Mm) |
| 110 | 98-7871 | 3 | Washer-Adjusting (1.675Mm) |
| 110 | 98-7872 | 3 | Washer-Adjusting (1.700Mm) |
| 110 | 98-7873 | 3 | Washer-Adjusting (1.725Mm) |
| 110 | 98-7874 | 3 | Washer-Adjusting (1.750Mm) |

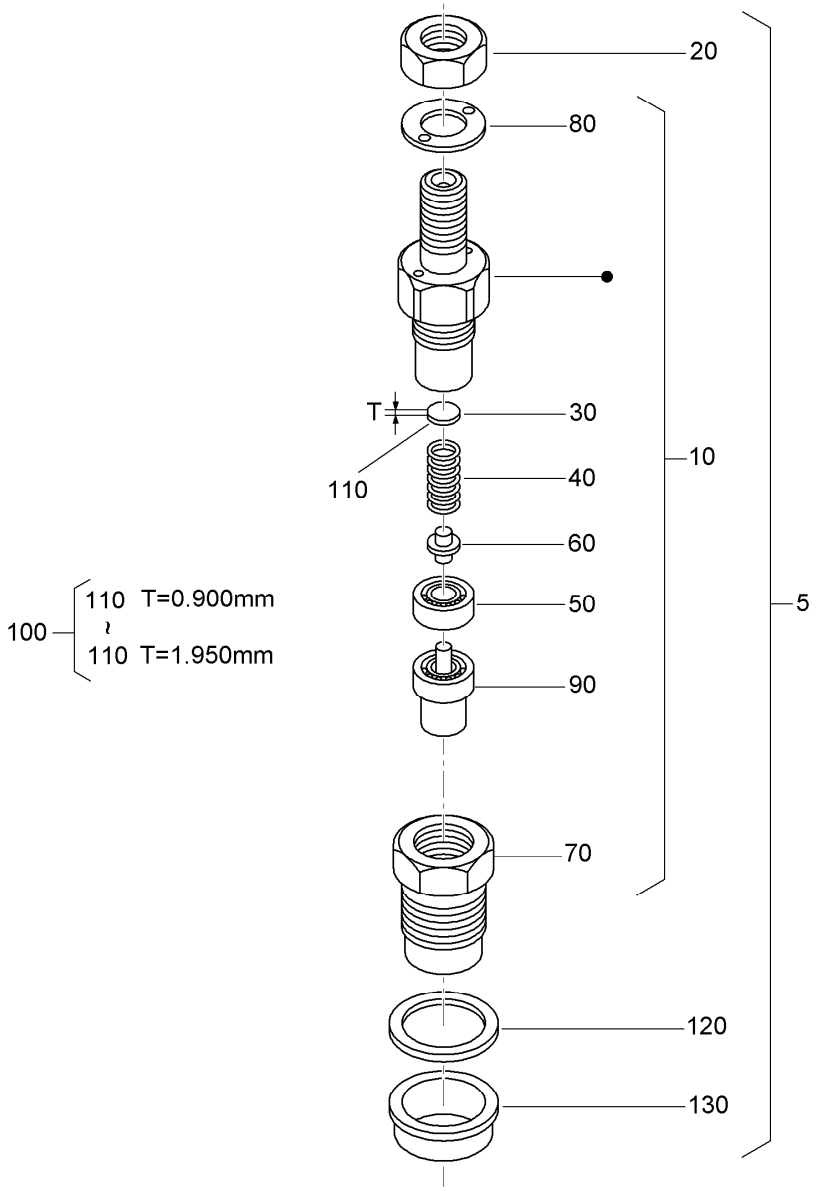


# Nozzle Holder Assembly (continued)

| Ref. | Part Number | Qty. | Description |
|---|---|---|---|
| 110 | 98-7875 | 3 | Washer-Adjusting (1.775Mm) |
| 110 | 98-7876 | 3 | Washer-Adjusting (1.800Mm) |
| 110 | 98-7877 | 3 | Washer-Adjusting (1.825Mm) |
| 110 | 98-7878 | 3 | Washer-Adjusting (1.850Mm) |
| 110 | 98-7879 | 3 | Washer-Adjusting (1.875Mm) |

| Ref. | Part Number | Qty. | Description |
|---|---|---|---|
| 110 | 98-7880 | 3 | Washer-Adjusting (1.900Mm) |
| 110 | 98-7881 | 3 | Washer-Adjusting (1.925Mm) |
| 110 | 98-7882 | 3 | Washer-Adjusting (1.950Mm) |
| 120 | 98-7676 | 3 | Gasket |
| 130 | 98-7677 | 3 | Seal-Heat |

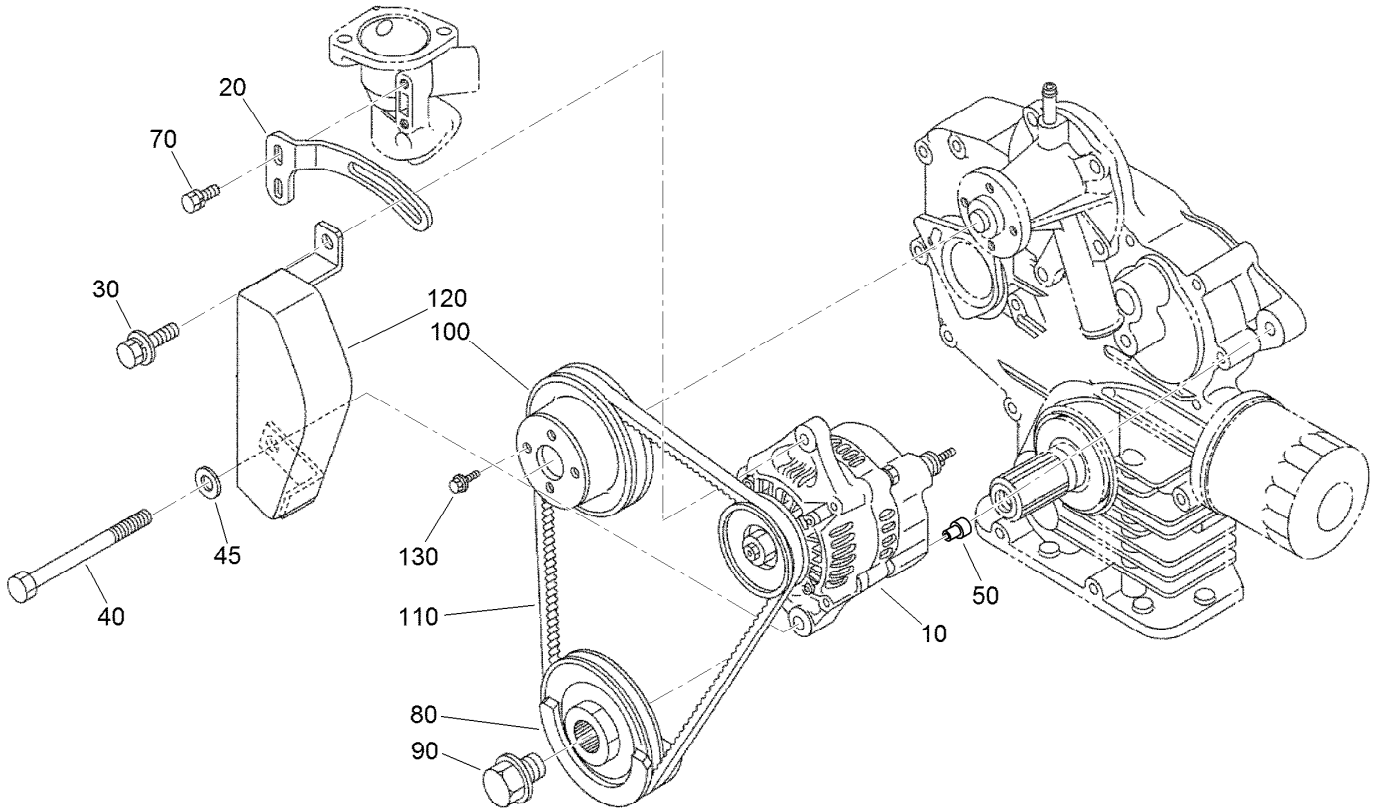


# Alternator and Pulley Assembly

| *Ref.* | *Part Number* | *Qty.* | *Description* |
|---|---|---|---|
| 10 | 117-5541 | 1 | 60 Amp Alternator ASM |
| 20 | 117-0314 | 1 | Stay-Alternator |
| 30 | 121-3800 | 1 | Bolt-Sems |
| 40 | 110-3793 | 1 | Bolt |
| 45 | 120-5832 | 1 | Washer-Plain |
| 50 | 110-3794 | 1 | Collar |
| 70 | 98-7692 | 2 | Bolt |
| 80 | 125-9055 | 1 | Pulley-Drive, Fan |
| 90 | 100-1978 | 1 | Bolt |
| 100 | 100-1921 | 1 | Pulley-Fan |
| 110 | 110-3796 | 1 | Belt-V |
| 120 | 117-0315 | 1 | Cover-Alternator |
| 130 | 99-8363 | 4 | Bolt-Flange |

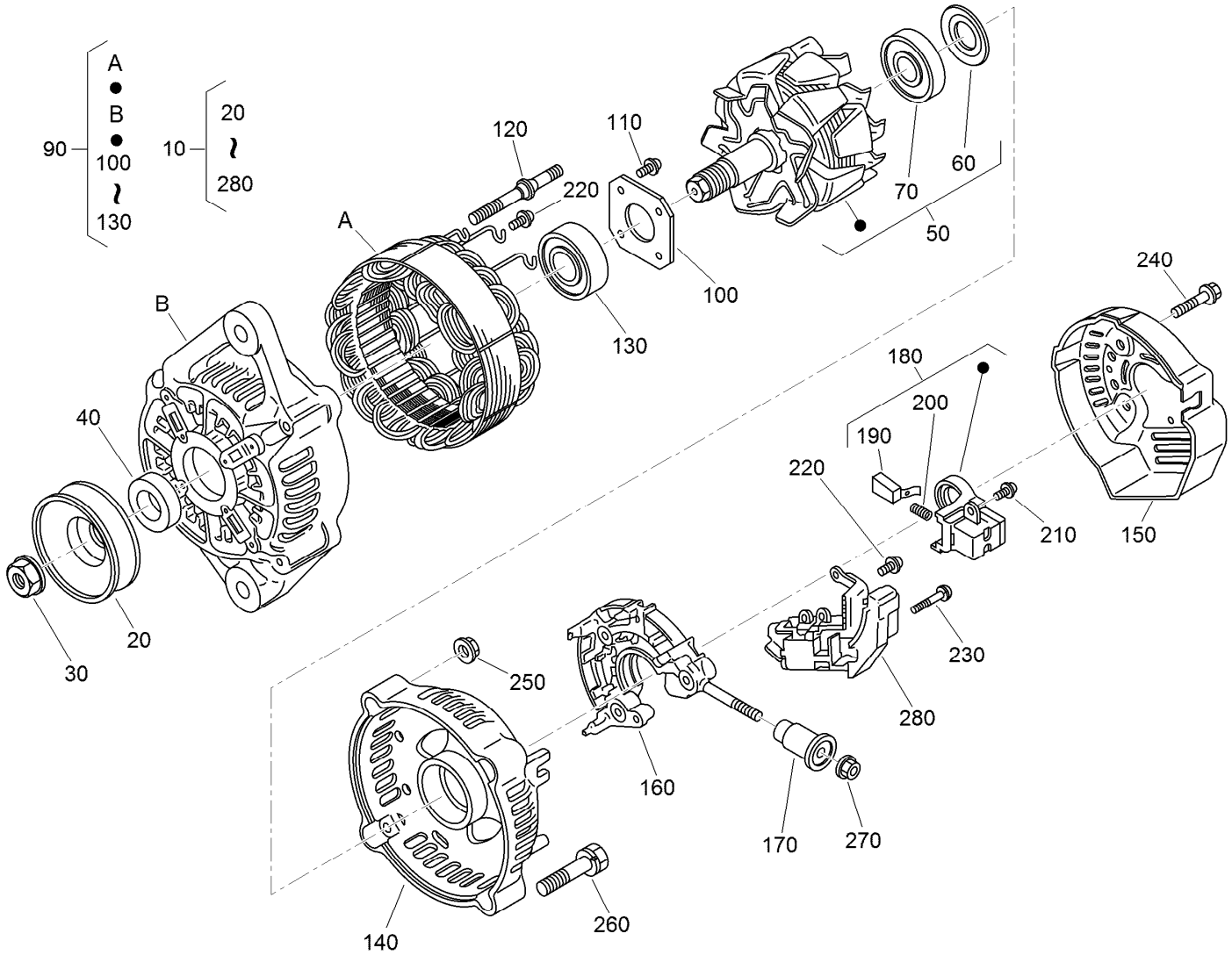


# Alternator Components Assembly

| Ref. | Part Number | Qty. | Description |
|---|---|---|---|
| 10 | 117-5541 | 1 | 60 Amp Alternator ASM |
| 20 | 98-9453 | 1 | Pulley-Dynamo |
| 30 | 98-7708 | 1 | Nut |
| 40 | 98-7709 | 1 | Collar |
| 50 | 117-0317 | 1 | Rotor ASM |
| 60 | 98-7711 | 1 | Cover-Bearing |
| 70 | 107-0138 | 1 | Bearing-Ball |
| 90 | 117-0316 | 1 | Drive End Frame ASM |
| 100 | 98-7715 | 1 | Plate-Retainer |
| 110 | 98-7716 | 4 | Screw-Head, Round |
| 120 | 98-7717 | 2 | Bolt-Through |
| 130 | 133-2811 | 1 | Bearing |
| 140 | 133-2813 | 1 | Frame-End |
| 150 | 117-0320 | 1 | Cover-End |

| Ref. | Part Number | Qty. | Description |
|---|---|---|---|
| 160 | 117-0322 | 1 | Holder |
| 170 | 117-0321 | 1 | Insulation-Brush |
| 180 | 107-0141 | 1 | Brush Holder ASM |
| 190 | 98-7724 | 2 | Brush |
| 200 | 98-7725 | 2 | Spring-Brush |
| 210 | 98-7727 | 6 | Screw-Head, Round |
| 220 | 98-7728 | 1 | Screw-Head, Round |
| 230 | 98-7726 | 2 | Screw-Head, Round |
| 240 | 98-7729 | 3 | Bolt |
| 250 | 98-7730 | 2 | Nut |
| 260 | 98-7731 | 2 | Bolt |
| 270 | 98-7732 | 1 | Nut |
| 280 | 117-0319 | 1 | Regulator ASM |

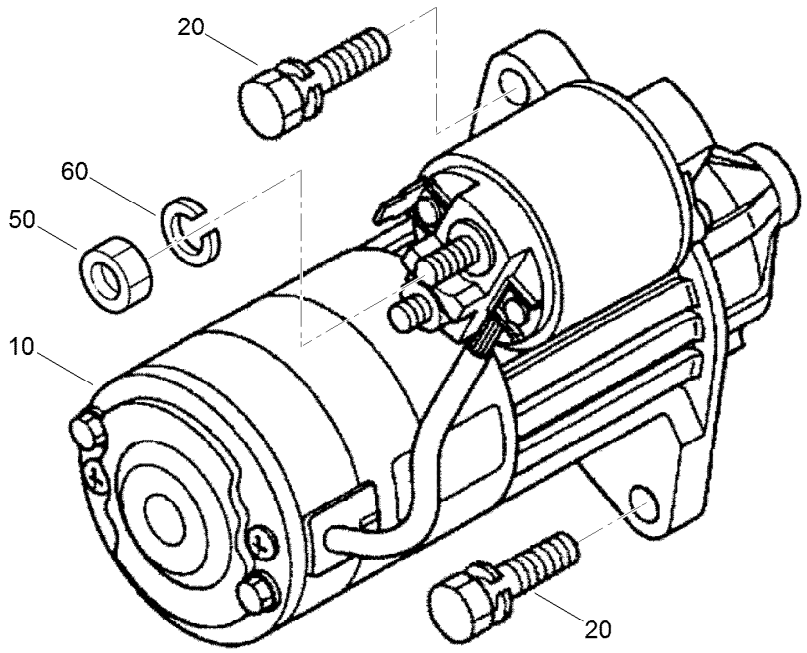


# Starter Installation Assembly

| *Ref.* | *Part Number* | *Qty.* | *Description* |
|---|---|---|---|
| 10 | 110-3800 | 1 | Starter ASM |
| 20 | 98-7697 | 2 | Bolt |
| 50 | 98-7534 | 1 | Nut |
| 60 | 105-2893 | 1 | Washer-Spring |

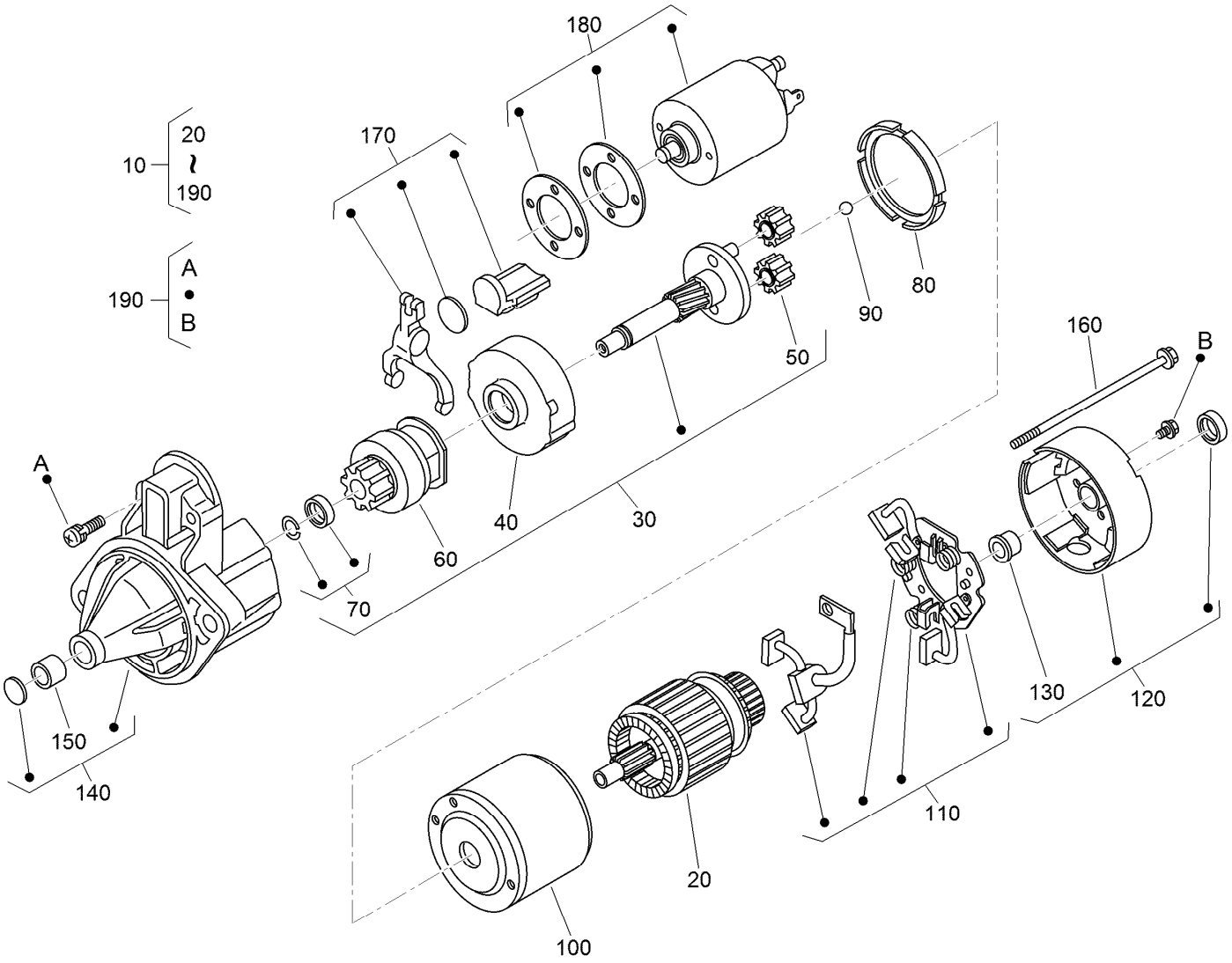


# Starter Component Assembly

| Ref. | Part Number | Qty. | Description |
|---|---|---|---|
| 10 | 110-3800 | 1 | Starter ASM |
| 20 | 110-3801 | 1 | Armature |
| 30 | 110-3802 | 1 | Shaft ASM |
| 40 | 120-3142 | 1 | Gear-Internal |
| 50 | 110-3804 | 3 | Gear-Planetary |
| 60 | 110-3805 | 1 | Clutch-Running, Over |
| 70 | 110-3806 | 1 | Stopper |
| 80 | 120-3143 | 1 | Gasket |
| 90 | 110-3808 | 1 | Ball |
| 100 | 130-1295 | 1 | Yoke |

| Ref. | Part Number | Qty. | Description |
|---|---|---|---|
| 110 | 110-3810 | 1 | Brush Holder ASM |
| 120 | 110-3811 | 1 | Rear Bracket ASM |
| 130 | 110-3812 | 1 | Bushing |
| 140 | 110-3813 | 1 | Front Bracket ASM |
| 150 | 110-3814 | 1 | Bushing |
| 160 | 110-3815 | 2 | Bolt |
| 170 | 110-3816 | 1 | Fork Lever ASM |
| 180 | 125-9099 | 1 | Switch-Magnetic |
| 190 | 110-3818 | 2 | Screws (Set Of 4) |

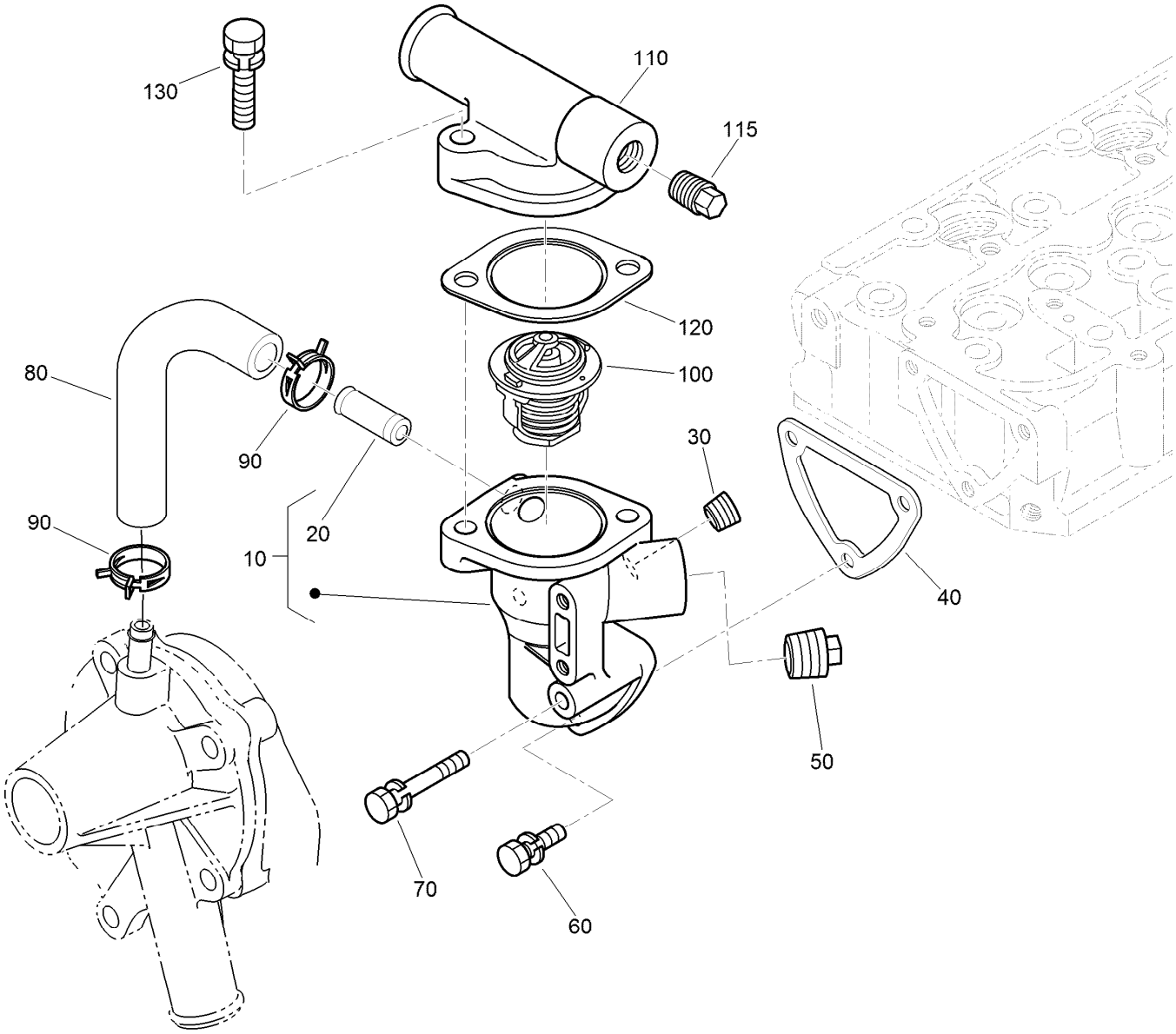


# Water Flange and Thermostat Assembly

| Ref. | Part Number | Qty. | Description |
|---|---|---|---|
| 10 | 110-3819 | 1 | Water Flange ASM |
| 20 | 98-9580 | 1 | Pipe-Return, Water |
| 30 | 98-9444 | 1 | Plug |
| 40 | 110-3820 | 1 | Gasket-Flange, Water |
| 50 | 110-3821 | 1 | Plug |
| 60 | 98-7692 | 2 | Bolt |
| 70 | 125-9063 | 1 | Bolt-Sems |
| 80 | 110-3822 | 1 | Pipe-Return, Water |
| 90 | 125-9078 | 2 | Clamp-Hose |
| 100 | 98-7778 | 1 | Thermostat ASM |
| 110 | 120-7575 | 1 | Cover-Thermostat |
| 115 | 125-9079 | 1 | Plug |
| 120 | 105-3748 | 1 | Gasket-Thermostat |
| 130 | 98-7777 | 2 | Bolt |

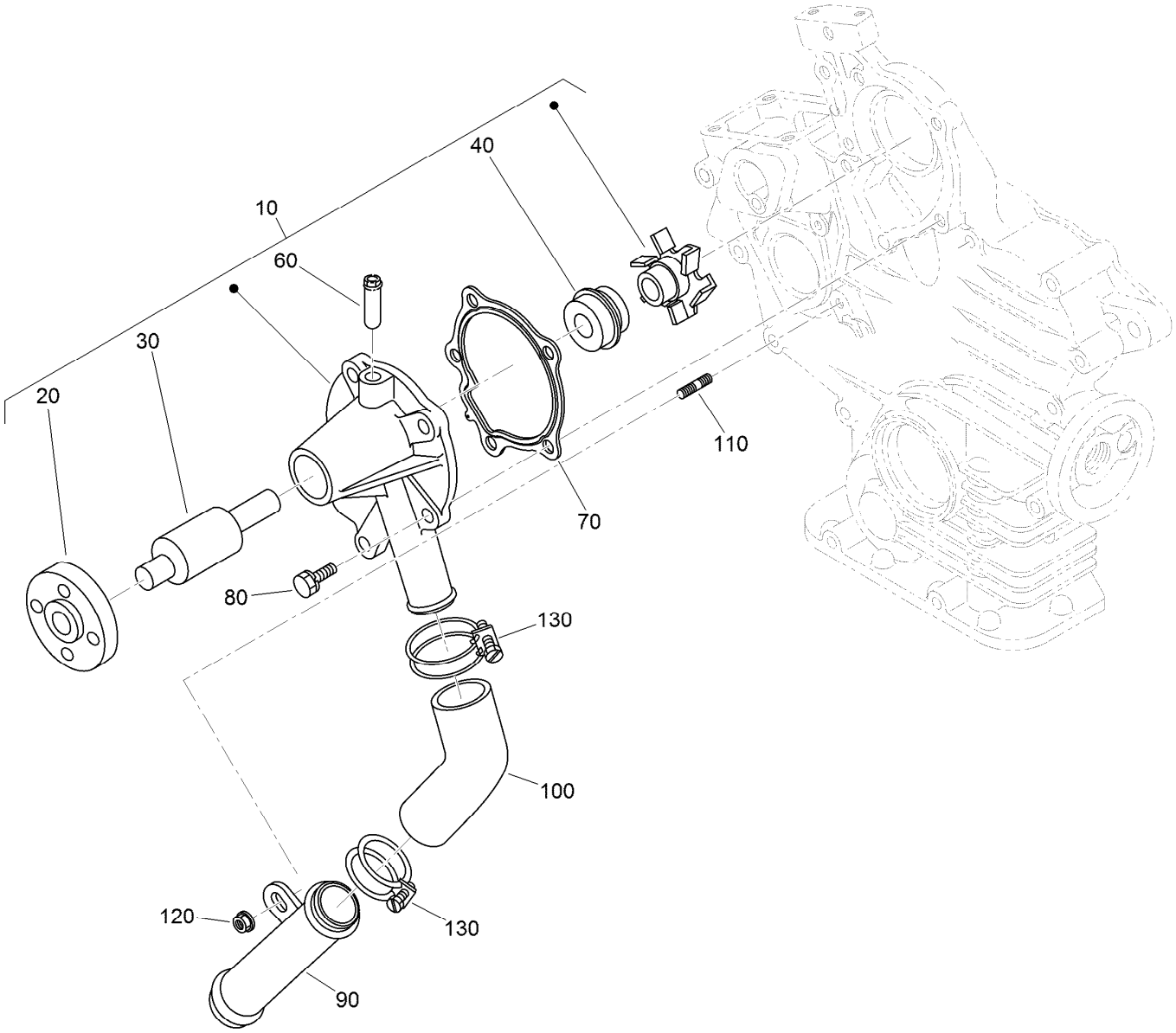


# Water Pump and Water Pipe Assembly

| Ref. | Part Number | Qty. | Description |
|---|---|---|---|
| 10 | 110-3824 | 1 | Water Pump ASM |
| 20 | 125-9081 | 1 | Flange-Pump, Water |
| 30 | 100-1934 | 1 | Bearing-Ball |
| 40 | 99-3518 | 1 | Water Pump Seal ASM |
| 60 | 100-1932 | 1 | Pipe-Return, Water |
| 70 | 117-0330 | 1 | Gasket-Pump, Water |
| 80 | 100-1750 | 4 | Bolt |
| 90 | 100-1918 | 1 | Pipe-Water |
| 100 | 110-3827 | 1 | Pipe-Water |
| 110 | 100-1924 | 1 | Stud |
| 120 | 100-2203 | 1 | Nut-Flange |
| 130 | 110-3828 | 2 | Band-Pipe |

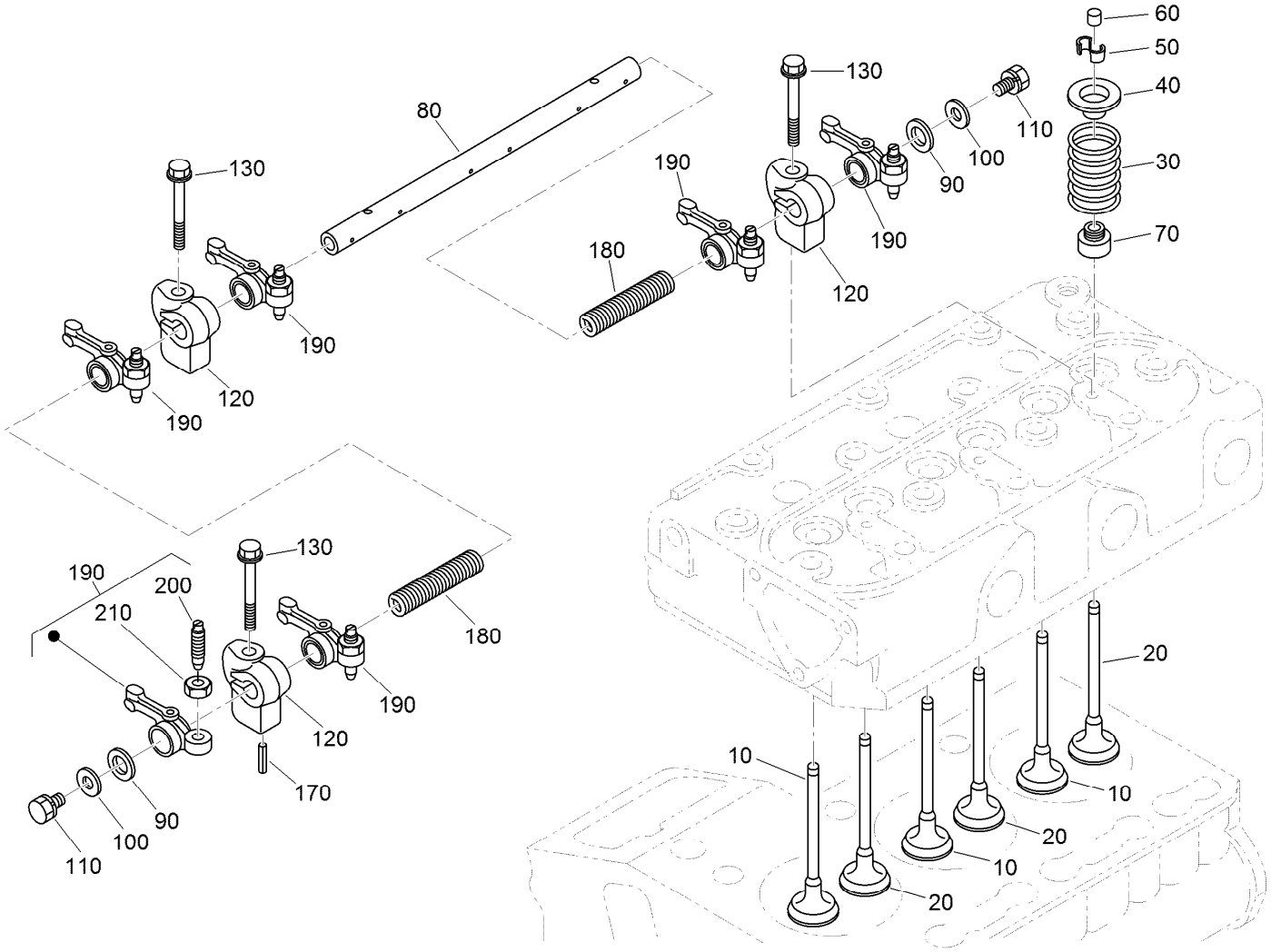


# Valve and Rocker Arm Assembly

| Ref. | Part Number | Qty. | Description |
|---|---|---|---|
| 10 | 112-2514 | 3 | Valve-Inlet |
| 20 | 112-2515 | 3 | Valve-Exhaust |
| 30 | 100-1823 | 6 | Spring-Valve |
| 40 | 100-1825 | 6 | Retainer-Spring, Valve |
| 50 | 120-3136 | 6 | Collet-Spring, Valve |
| 60 | 100-2155 | 6 | Cap-Valve |
| 70 | 100-1797 | 6 | Seal-Stem, Valve |
| 80 | 112-8341 | 1 | Shaft-Arm, Rocker |
| 90 | 100-2044 | 2 | Washer |

| Ref. | Part Number | Qty. | Description |
|---|---|---|---|
| 100 | 110-3832 | 2 | Washer-Plain |
| 110 | 100-1762 | 2 | Bolt |
| 120 | 110-3833 | 3 | Bracket-Arm, Rocker |
| 130 | 110-3834 | 3 | Bolt-Flange |
| 170 | 98-7602 | 1 | Pin-Spring |
| 180 | 112-8342 | 2 | Spring |
| 190 | 100-1884 | 6 | Rocker Arm ASM |
| 200 | 100-1885 | 6 | Screw-Adjusting |
| 210 | 100-1827 | 6 | Nut |

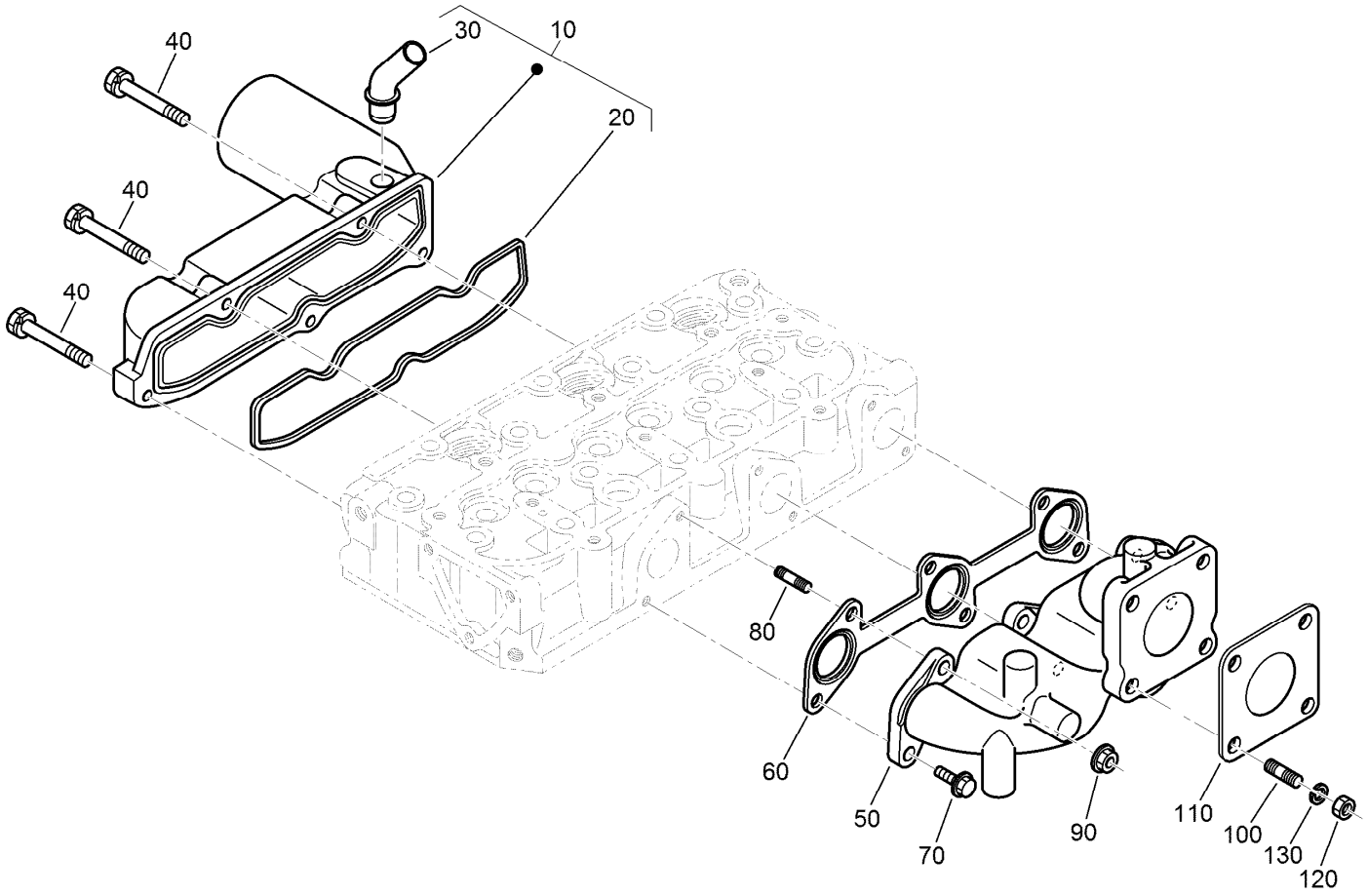


# Inlet and Exhaust Manifold Assembly

| *Ref.* | *Part Number* | *Qty.* | *Description* |
|---|---|---|---|
| 10 | 120-3141 | 1 | Intake Manifold ASM |
| 20 | 110-3838 | 1 | Gasket-Manifold, Intake |
| 30 | 121-2417 | 1 | Pipe-Breather |
| 40 | 98-9352 | 5 | Bolt |
| 50 | 110-3839 | 1 | Manifold-Exhaust |
| 60 | 110-3840 | 1 | Gasket-Manifold, Exhaust |
| 70 | 130-1154 | 3 | Screw-Hex HD |
| 80 | 130-1156 | 3 | Bolt-Stud |
| 90 | 100-1778 | 3 | Nut |
| 100 | 98-7769 | 4 | Stud |
| 110 | 99-8343 | 1 | Gasket-Muffler |
| 120 | 98-7534 | 4 | Nut |
| 130 | 105-2893 | 4 | Washer-Spring |

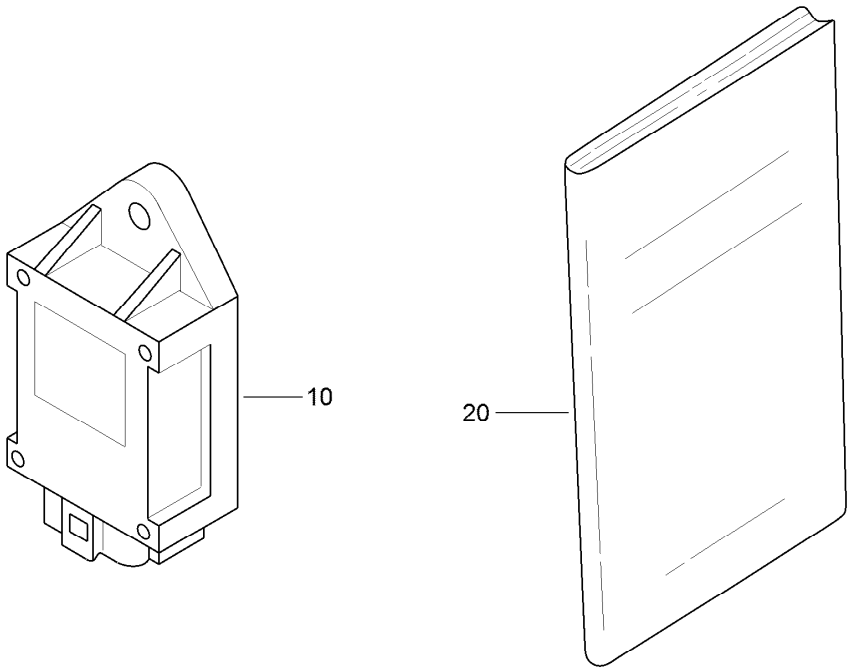


# Miscellaneous Engine Parts

| *Ref.* | *Part Number* | *Qty.* | *Description* |
|---|---|---|---|
| 10 | 98-7611 | 1 | Controller-Glow |
| 20 | 130-1513 | 1 | Manual-Operator |

# Attachments and Accessories

## For 07387 Workman HDX-D 4-Wheel Drive Utility Vehicle with Bed

| Product Name | Model/Part |
|---|---|
| Pro Sweep Turf Sweeper | 07068 |
| Full Area Flatbed | 07301 |
| Full Area Flatbed Side Kit | 07302 |
| Fold Down Side Kit | 07303 |
| High-Flow Hydraulic Kit | 07316 |
| 2/3 Area Flatbed | 07321 |
| 2/3 Area Flatbed Side Kit | 07322 |
| Bed Liner | 07331 |
| 1/3 Area Flatbed | 07341 |
| 1/3 Area Platform Lift | 07347 |
| Heater Kit | 07349 |
| Canopy | 07372 |
| Windshield | 07373 |
| 4 Post Roll-Over Protection System | 07378 |
| Cab Kit | 07392 |
| Door Kit with Sliding Window | 07393 |
| Rear PTO Kit | 07419 |
| Hand Throttle Kit | 07420 |
| Aggressive Tire Kit | 07422 |
| Synthetic Turf Conditioner, Tow-Behind Accessory | 08791 |
| ProCore Processor | 09749 |
| Backup Alarm Kit | 107-8037 |
| Premium ATF (Drum) | 108-1185 |
| Premium ATF (Pail) | 108-1186 |
| Premium All Purpose Grease (Tube) | 108-1190 |
| Remote Hydraulics Manifold Kit | 110-2626 |
| Tire-Rear, 24x13-12 | 110-5132 |
| Wheel-12in x 8.0in | 114-8260 |
| Wireless Hourmeter | 115-4754 |
| Horn Kit | 115-7825 |
| Side Mirror Kit | 115-7849 |
| Roll-Over Protection System Signal Kit | 117-4825 |
| Worklight Kit | 117-4827 |
| Remote Hydraulic Float Kit | 117-4828 |
| Receiver Hitch Kit | 117-4831 |
| Trailer Signal Kit | 117-4836 |
| Manual 4-Wheel Drive Control Kit | 119-0817 |
| Canopy for Four-Post Roll-Over Protection System Kit | 119-9457 |
| Road Light and Homologation Kit | 120-5030 |
| Brake and Signal Light Kit | 120-5045 |
| High Air Intake Kit | 121-6285 |
| Front Differential Interrupter Kit | 121-6337 |
| Trailer Brake Kit | 125-0123 |
| Tailpipe Extension Kit | 127-7397 |
| 1/3 Area Cover Kit | 127-8739 |
| Exterior Mirror Kit | 130-5448 |

# Attachments and Accessories (continued)

| | |
|---|---|
| Interior Mirror Kit | 130-5449 |
| Beacon Kit | 130-5484 |
| Work Light Kit | 130-5485 |
| Windshield Washer Fluid Kit, 2015 and after Workman MD/HD Series Utility Vehicle | 130-5615 |
| Hitch Asm | 131-3462 |
| Tire and Wheel Asm | 131-8432 |
| 4-Wheel Drive Wire Harness Kit | 132-6774 |
| LED Worklight Kit | 133-0554 |
| ROPS Beacon Kit | 133-0609 |
| Bracket-light, Canopy | 133-0627 |
| Wheel/Tire ASM, A502 (20X9-12)Semi-Aggressive | 136-6308 |
| Wheel/Tire ASM, K502 (24X12-12)Semi-Aggressive | 136-6309 |
| Wheel/Tire ASM, A404 (20X9-12)Smooth | 136-6334 |
| Wheel/Tire ASM, A404 (24X12-12)Smooth | 136-6335 |
| Wireless Hourmeter Kit | 138-5655 |
| Multi Pro WM Turf Sprayer | 41240 |
| Spreader Base Unit | 41253 |
| Vicon Spreader | 41256 |
| Topdresser 1800 | 44225 |
| Core Harvester Adapter Kit | 44242 |
| Topdresser 2500 | 44507 |
| Pro Force Debris Blower | 44552 |
| Pro Force Debris Blower | 44553 |
| Pro Force Debris Blower | 44554 |
| ProPass 200 Top Dresser with Twin Spinner | 44701 |
| ProPass 200 Top Dresser with Twin Spinner and Wireless Control | 44751 |
| 12 Inch Rear Wheel Weights | 81115 |
| Automatic Tailgate Release Kit | 92-1220 |
| Fuse Block | 92-2641 |
| PTO Over Running Clutch Kit | 92-2655 |
| Topdresser 1800 Lift Kit | 92-4452 |
| Spark Arrestor Screen | 94-8157 |
| Tire-Rear, 23x8.50-12 | 98-2993 |
| Tire-Rear, Industrial | 99-1091 |

TORO®

Count on it.