TORO

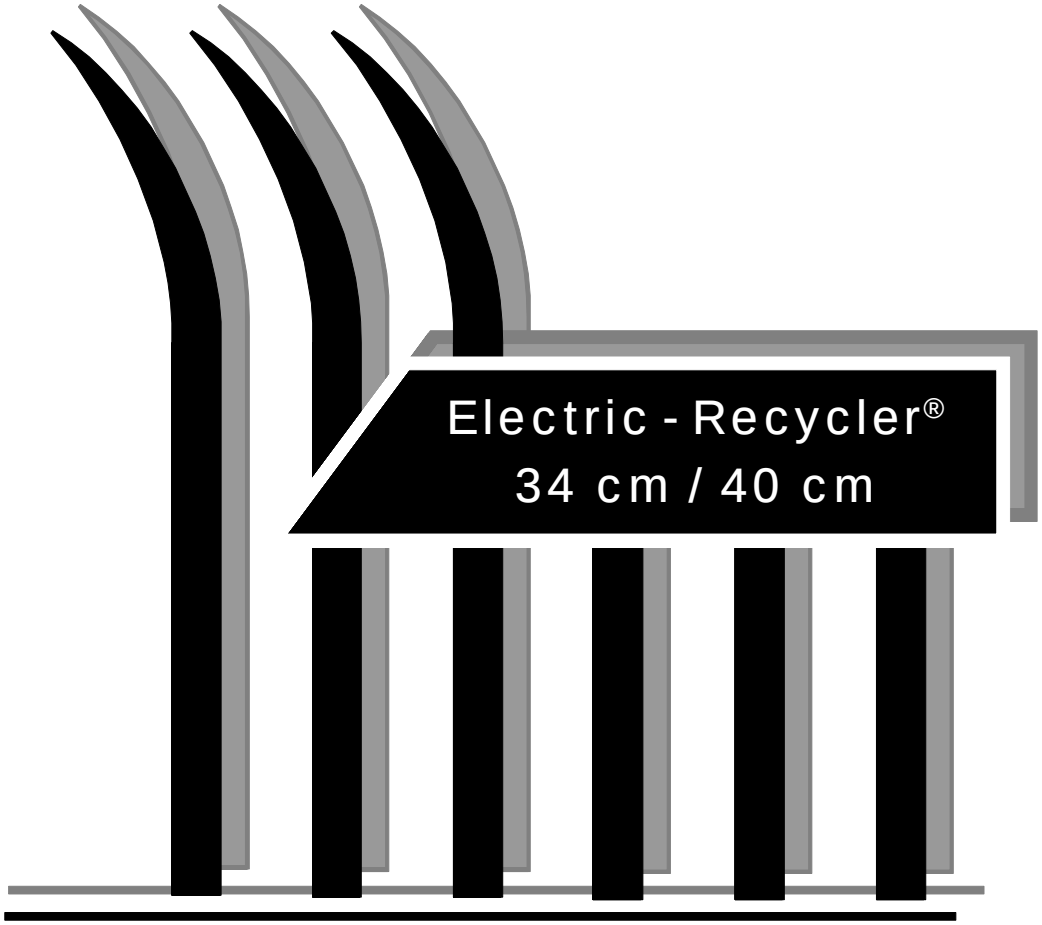

Model

34 cm	**21060, 21061, 21062**
40 cm	**21070, 21071, 21072**

GB

Operator's Manual

© 1998 by The Toro Company

General	**3**		**Maintenance and Upkeep**	**15**	
Safety	**5**		**Spare Parts and Troubleshooting**	**17**	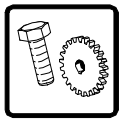
Assembly and Start-up	**7**		**Hints on Tending the Lawn**	**23**	
Operation	**11**				

© 1998 by TORO Company

1 General

1.1 Introduction

1.2 Regulation on time limits for the operation of lawn mowers

1.3 Technical data

1.1 Introduction

The TORO lawn mower has been designed according to the latest technical and physiological aspects with due regard to the safety regulations in force.
With its special equipment the Recycler®- -Mower can cut up grass and leaves several times. This superfine-cut material will be sprinkled into the lawn by the mower.
Read the instructions for use carefully and familiarize yourself with the instructions on safety, assembling, operation and maintenance.
The TORO lawn mower has been designed for the private use in the garden. Lawn mowers for the private garden are units which are - as a rule - in use for not more than 50 hours per year, and which are mainly used for the tending of patches of grass and lawns; they are, however, not to be used in public gardens, parks, sports fields etc. and not on roadsides nor in the agriculture and forestry.
The observance of the instructions for use enclosed by TORO is a prerequisite for the proper use of the lawn mower. The instructions for use also enclose the conditions of operation, maintenance and upkeep.

Safety



On-the-job safety symbol, this symbol you will find with all on-the-job safety instructions dealing with danger of personal injury. It is imperative to observe these instructions. The on-the-job safety instructions should be passed on to other users as well. The general regulations for safety and prevention of accidents must also be observed.



Warning sign, this symbol marks the points which are to be taken special notice of in order to avoid damaging or destroying the unit.

1.2 Regulation on time limits for the operation of lawn mowers.

The regulations on the operation of lawn mowers vary from one region to another. The competent authority will be pleased to inform you on regulations and regional restrictions, especially as to the protection of the period of quiet after lunch or of very sensitive areas (e. g. nature reserves),

1.3 Technical data

Electro Recycler 34 cm

width of cut:	34 cm
motor type:	CRB 52/21A with brake
output:	1100 W
voltage:	230 V~ 50 Hz
amperage:	5,5 A
motor speed:	2800 min^{-1}
vibrations on the handle bar a_{hw} :	4 m/sec^2 (measured in accordance with pr EN 1033)
weight:	17 kg
dimensions :	L x W x H = 80 x 38 x 35 cm (folded up)

Electro Recycler 40 cm

width of cut:	40 cm
motor type:	CRB 72/21A with brake
output:	1400 W
voltage:	230 V~ 50 Hz
amperage:	6,5 A
motor speed:	2800 min^{-1}
vibrations on the handle bar a_{hw} :	4 m/sec^2 (measured in accordance with pr EN 1033)
weight:	19 kg
dimensions:	L x W x H = 88 x 44 x 35 cm (folded up)

© 1998 by The Toro Company

TORO

GB EC Declaration of Conformity to Directives
89/392, 91/368, 93/44, 93/68, 89/336, 73/23 (EN60335)

GB Certificate of Conformity
Conforms to the Specifications of Directive 84/538/EEC

Manufacturer	**The Toro Company, 8111 Lyndale Ave.So., Bloomington, MN 55420-1196, USA**	
Product Name	Toro Recycler®	
Serial Number	8900101 +	
Model Number	34 cm 21060 21061 21062	40 cm 21070 21071 21072
Noise information	L_{WA} = 85 db (A)	L_{WA} = 89 db (A)
Signature, Title, Date	VP Technical Manager	Bloomington, MN, USA 01.11.1998



Jerry Patrin

© 1998 by The Toro Company

2 Safety

2.1 General notes
2.2 Proper use
2.3 Improper use
2.4 Preparing the lawn mower for safe operation
2.5 Safe operation
2.6 Safe maintenance and storage
2.7 List of symbols

2.1 General notes

1. Read the instructions carefully. Familiarize yourself with the operating elements and the proper use of the unit.
2. Children as well as persons who are not familiar with the instructions for use must not operate the lawn Observe the local age limits for the operation of the unit.
3. Do not start the mower in close proximity to children and pets.
4. The operator is liable for injuries of third parties and damages of their property.

2.2 Proper use

The lawn mower serves exclusively for the tending of grass patches and lawns in the private garden. Any other use is regarded as inexpedient. Roth Motorgeraete GmbH is not liable for damages resulting from this.

2.3 Improper use

The mower must not be used for the trimming of bushes, hedges and shrubs, for the cutting of creepers or grass on roof gardens or in balcony boxes, for the cleaning (by suction, blowing away; snow removal) of sidewalks nor as a chaffcutter for chopping cut-off twigs and branches of trees and hedges. Moreover, the mower must not be used as drive unit for other interchangeable equipment items and tool kits. It is also regarded as inexpedient to use the unit for pulling lawn sweepers and barrow-type spreaders. The same holds true for the attachment of trailers, e. g. to ride along with or for transporting cut material except with the grass collecting sack which TORO designated for this purpose.

2.4 Preparations for safe operation

1. You should always wear sturdy shoes and trousers when mowing. Do not mow barefoot or wearing sandals.
2. First inspect the area to be mowed. Remove all objects which can be hurled away by the mower.
3. Make a visual inspection before starting the motor and check for damages and wear on cutter bar, fastening screws of cutter and cutting parts.
   Worn or damaged cutters and screws must always be exchanged in sets to keep the balance.

2.5 Safe operation

1. Mow only in daylight or with good illumination.
2. Do not mow grass when wet.
3. Make sure to have a firm foothold when mowing on sloping ground.
4. Mow at a walking pace, do not run.
5. With a wheeled rotary mower you should always mow sideways to the slope, never up and down.
6. Be careful when changing direction on sloping ground.
7. Do not mow on extremly sloping ground.
8. Be careful when moving the lawn mower backward or pulling it.
9. Stop the engine, if you have to tilt the lawn mower when walking off the grass to cross paths. Transport the machine to the area to be mowed and back with the motor off.
10. Never operate the lawn mower without safety devices e. g. impact protection and/or grass collecting elements.
11. On starting the motor, all instructions are to be observed, and attention is to be paid that the feet are in a safe distance to the cutters.
12. Do not tilt the lawn mower when starting the motor, unless the motor has to be tilted for this purpose. In this case, the unit must not be tilted more than absolutely necessary, to be more precise, the mower may only be tilted backward, so that the bottom side with the cutters is not turned towards the operator
13. Keep away from the grass ejection opening when starting the motor.
14. Never put your hands and feet on or under rotating parts. Keep a due distance to the ejection hole.
15. Do not lift or carry the lawn mower with the motor running.
16. In the following cases, the motor is to be stopped and the mains plug is to be disconnected:
    - before removing chokings resp. obstructions in the ejection channel
    - before inspecting, cleaning or performing any other work on the lawn mower;
    - after the lawn mower has hit against a foreign matter. Check your lawn mower for damages and make the necessary repairs before further use of the lawn mower.
    - if the unit starts to vibrate heavily (immediate inspection required).
17. In accordance with VDE standard 0282, for electric mowers only extension cables with a metallic section of at least 1.5 mm^2 of the type HO5RN-F or HO7RN-F may be used. The coupler plugs and socket connections of the connecting cables must be made of rubber or rubber-covered, splash-proof and in accordance with VDE standard 0282.
    TORO cables conform to this requirement. Check the cable periodically for signs of defects. It may only be used if undamaged.

2.6 Safe maintenance and storage

1. Ensure that all nuts, bolts and screws are tightened to guarantee a safe operating state.
2. Check the grass collecting sack at short, regular intervals for wear and damages.
3. For safety reasons, worn or damaged parts are to be exchanged.

© 1998 by The Toro Company

2.7 List of symbols

„Motor ON“



„Motor OFF“



„Adjustment of cutting height“



Warning

Read the instructions for use before starting



Third parties have to be kept out of the hazardous area



Warning! Rotating cutter!

Keep hands and feet off



Warning! Danger of electric shock

Keep dry



Disconnect mains plug before servicing the cutting tool



If the blade catches or cuts the cord, immediately unplug the cable from the outlet.

© 1998 by The Toro Company

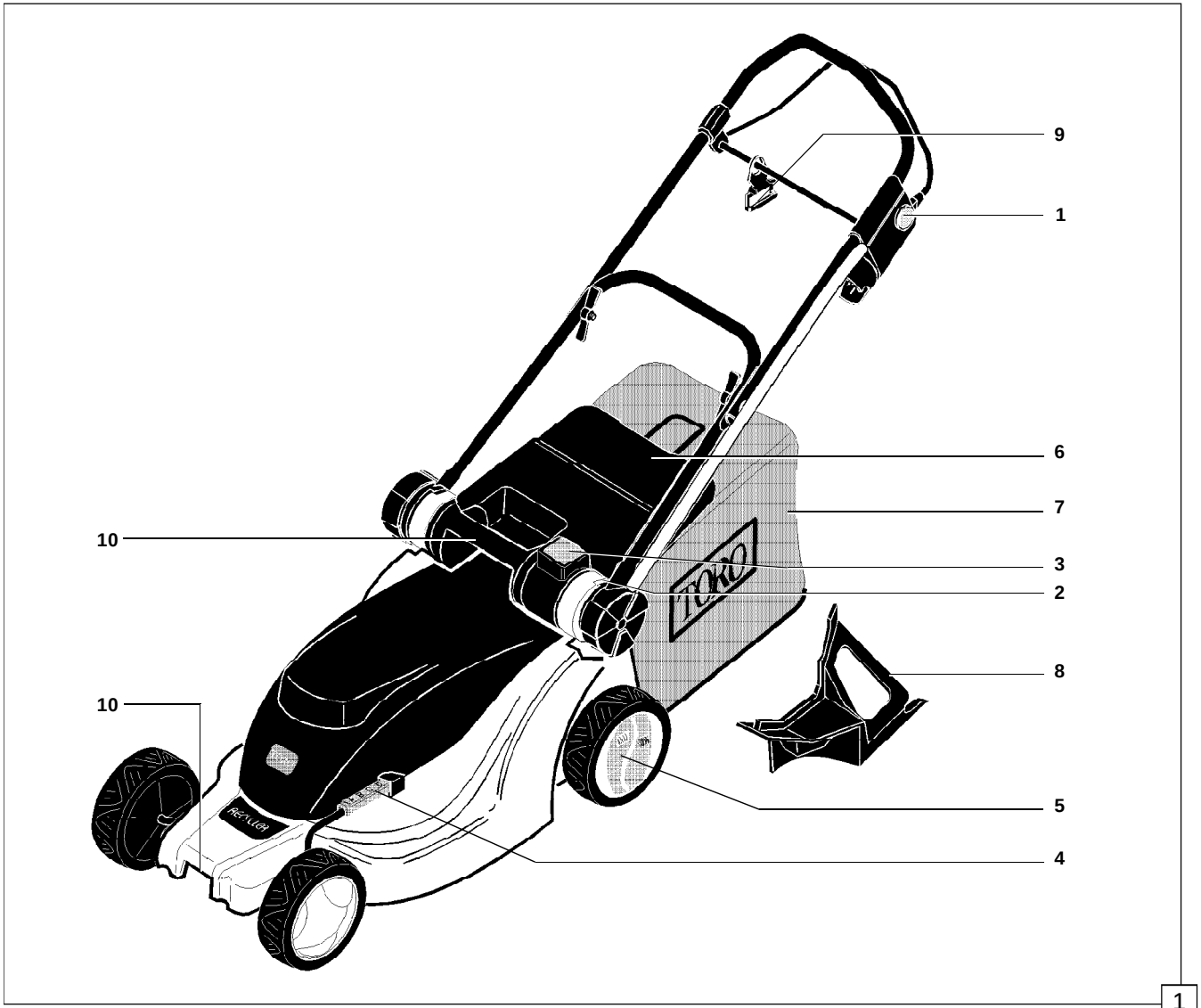

1

3 Assembly and start-up

3.1 Become acquainted with your lawn mower
3.2 Setting the lawn mower up
3.3 Mounting the wheels
3.4 Mounting the handlebar
3.5 Attaching the grass collecting device
3.6 Adjusting the cutting height
3.7 Proper cutting height
3.8 Connecting the lawn mower

3.1 Become acquainted with your lawn mower

1 ON-OFF switch
For turning the mower on and off.

2 Height adjustment of handlebar

3 Pushbutton for adjustment of cutting height (6 steps)

4 Cutting height scale
Scale indicating the adjusted cutting height

5 „Smart Wheel“ scale
Scale for adjusting the proper cutting height

6 Ejection door
Guard for the ejection opening which must not be removed. It also serves as a stacker for the cut grass when mowing without collecting device.

7 Grass-collecting device
Device for collecting the grass during mowing.

8 Recycler® plug
To recycle, close the ejection channel with it.
For mowing with the grass collecting device or if a deposition of the grass is desired, remove the Recycler® plug

9 Cable strain relief
Protects plug-in socket and socket connection from extreme pull

10 Carrying handles

© 1998 by The Toro Company

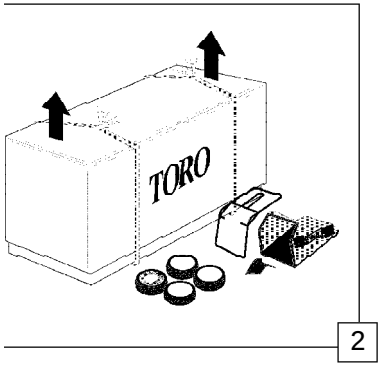

2

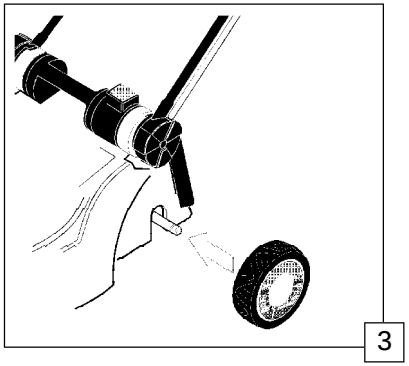
3

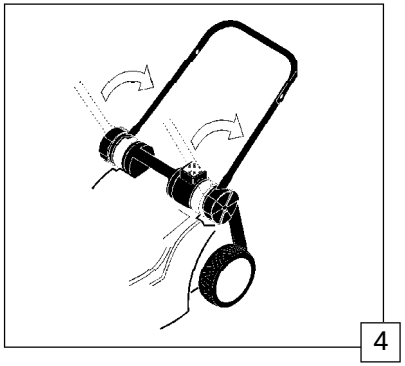
4

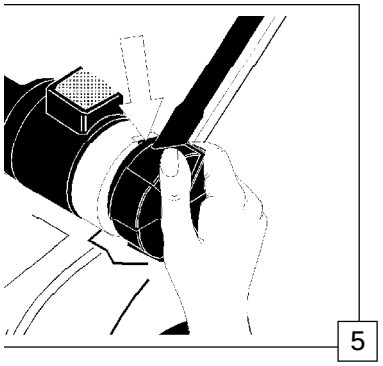
5

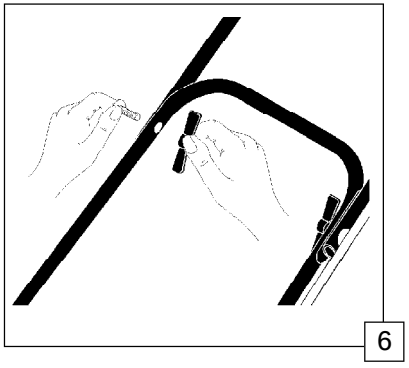
6

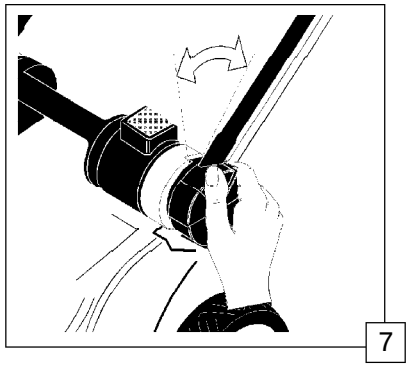
7

3.2 Setting the lawn mower up

1. Open the tapes and lift the upper part of the carton (Fig. 2).
2. Take out the components and put them down (Fig. 2).
3. Check completeness of contents.
   Dispose packaging according to the local regulations.

3.3 Mounting the wheels

Note: First mount the wheel bearing with the ”Smart-Wheel” scale on the left in the back.

1. Push the wheel bearing the ”Smart-Wheel“ scale on the left-hand side in the back onto the axle until engaged (Fig. 3).
2. Mount the other wheels.

Wheels must engage on the axles.

3.4 Mounting the handlebar

The cable must not be bent, pinched or damaged.

1. Unscrew the tommy nuts on the sides of the mower rear and pull up the lower part of the handlebar until the locks engage into the groove on the housing (Fig. 4 + 5).
2. Fasten the tommy nuts fingertight.
3. Add the upper part of the handlebar and put the screws from the outside inwards into the bore holes (Fig. 6).
4. Fasten the upper part of the handlebar by screwing down the butterfly nut fingertight.
5. Adjust the height of the handlebar with the tommy nuts on the mower housing - asdjusting range approx. 10 cm (Fig.7).

© 1998 by The Toro Company

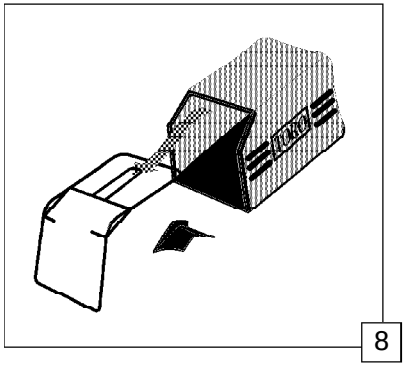

8

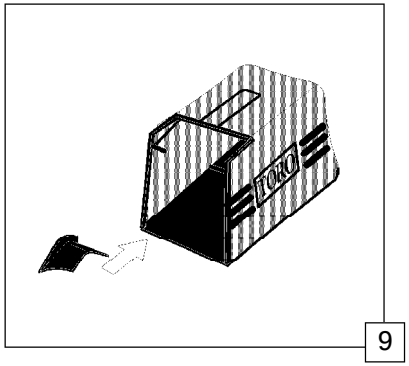

9

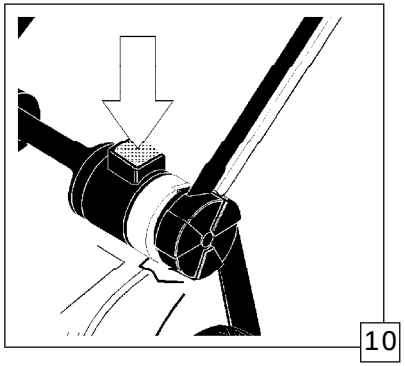

10

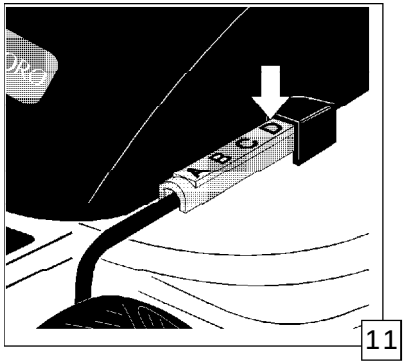

11

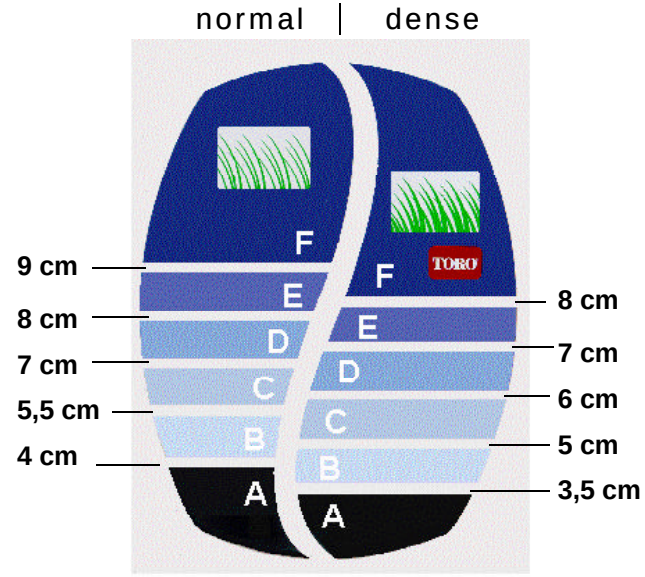

setting height-of-cut B - F

12

3.5 Attaching the grass-collecting device

1. Put the fabric of the collecting sack from behind onto the frame (Fig. 8).
   Slide the upper plastic profile underneath the handle to the front and clip it there.
2. clip the other plastic profiles around the frame.
3. clip the plastic profile (Fig. 9)

3.6 Adjusting the cutting height

Adjust cutting height only when the motor is turned off.

The cutting height is adjustable with a six-step central height adjustment.

1. Hold the lawn mower by the handle above the ejection door.
2. Press the red pushbutton (Fig. 10).
3. Adjust the cutting height by means of the scale keeping the push button pressed and moving the mower up and down (Fig. 11).
4. Let the push button go. The mower will be locked in the desired position.

3.7 Proper cutting height

The left rear wheel bears a scale (Smart Wheel) for reading the appropriate cutting height (Fig. 12).
Left scale = normal grass
Right scale = dense grass
During the warm summer months, adjust cutting height according to the scale „normal“.
For dense, thicker or damp grass e. g. in spring, use the scale „dense“.

Never use position **"A"** for recycling

In easy and suitable conditions, position **"B"** is possibletouse, recommended for recycling is **"C"**, **"D"** or **"E".**

1. First push the mower onto the lawn - the scale must be parallel to the ground.
2. Now you can read the length of the uncut grass on the scale and choose the recommended adjustment.

© 1998 by The Toro Company

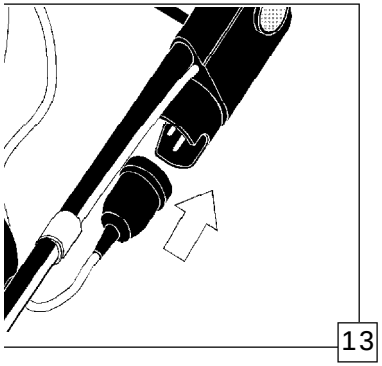
13

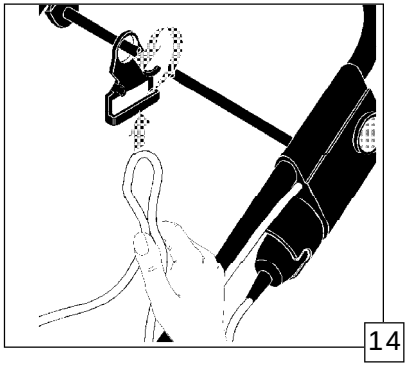
14

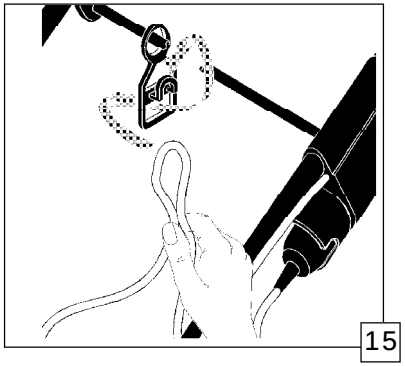
15

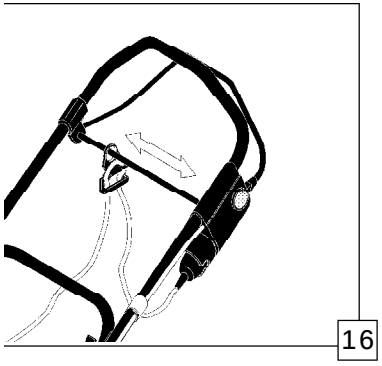
16

3.8 Connecting the lawn mower

Important:
Use only approved outdoor extension cables with a metallic section of at least 1.5 mm².

- Check the cable for defects.
  Never use a damaged cable.
- Keep the cable off the cutter when mowing.
- Do not let the cable chafe on edges and pointed or sharp objects.
  Do not pinch the cable.

1. Fasten the connecting cable leading to the motor to the handlebar by means of the holding straps.
2. Connect the cable to the plug-in socket on the handlebar (Fig.13).
3. Secure the cable with the strain relief (Fig. 14 + 15).
   It is imperative to use the strain relief.
   Make sure that the cable section between the plug-in socket and the strain relief is of sufficient length so that the strain relief may slight over the whole width of the handlebar (Fig.16)
4. Connect the mains plug.

Note: Use an extension cable of the appropriate length. Extra-long cables lead to a power loss and a reduction of the mowing capacity.
If using a cable drum, unwind the cable completely, otherwise the cable drum might heat up to an unacceptable extent.

⚠ Disconnect the mains plug when leaving the mower. Do not take the mains plug of the socket by pulling on the cable.

© 1998 by The Toro Company

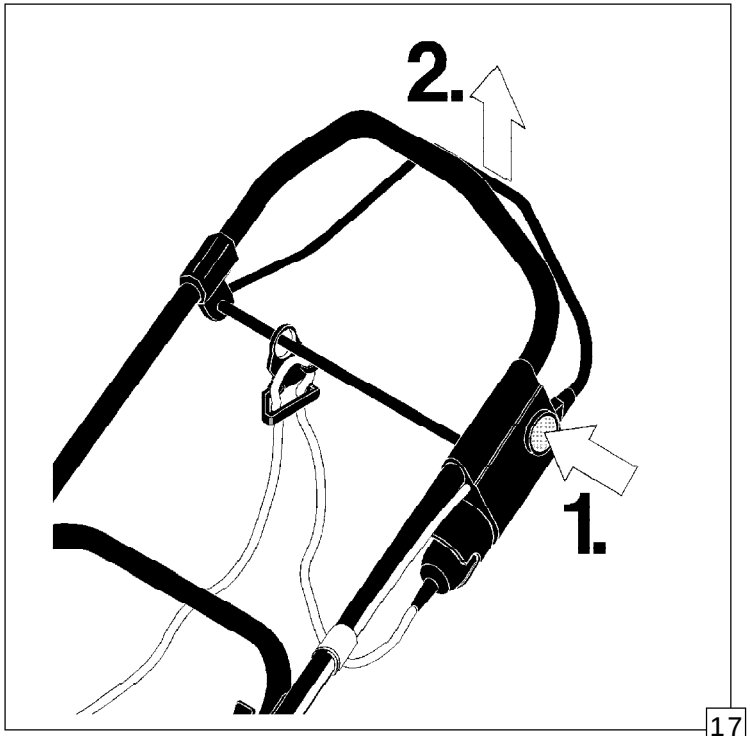

17

4 Operation

4.1 How to turn the mower on and off
4.2 Recycling
4.3 Mowing with grass-collecting device
4.4 Mowing without grass-collecting device

4.1 How to turn the mower on and off

Make sure that the mains cable does not lie next to the mower housing

Turning on

Important! Observe the right order of the starting operation, otherwise the motor will not start.

1. Put the mower on even ground. If the grass is high, tilt the mower slightly by pushing the handlebar down (Fig. 17).
2. Push the red button on the side of the plug shell and keep it pushed.
3. Pull the control lever to the socket and let the red button go.

The motor runs as long as the control lever is pulled.

Turning off

Let the control lever go.

The cutter will coast for a short time.
Do not touch underneath the mower.

Turn the mower off when driving off the lawn.
Wait until the cutters stand still and disconnect the mains plug before transporting or lifting the mower.

© 1998 by The Toro Company

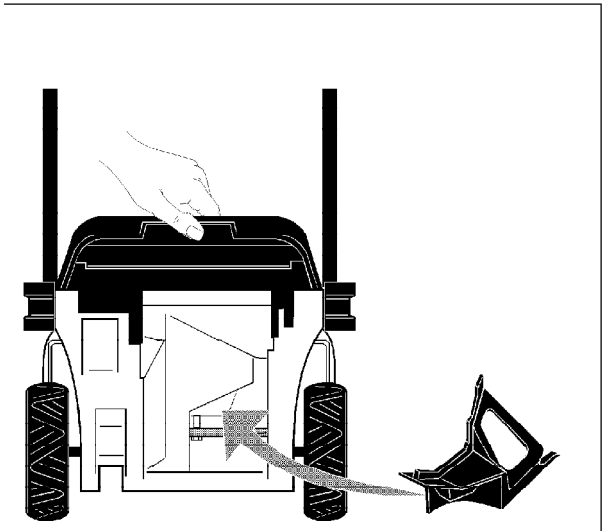

18

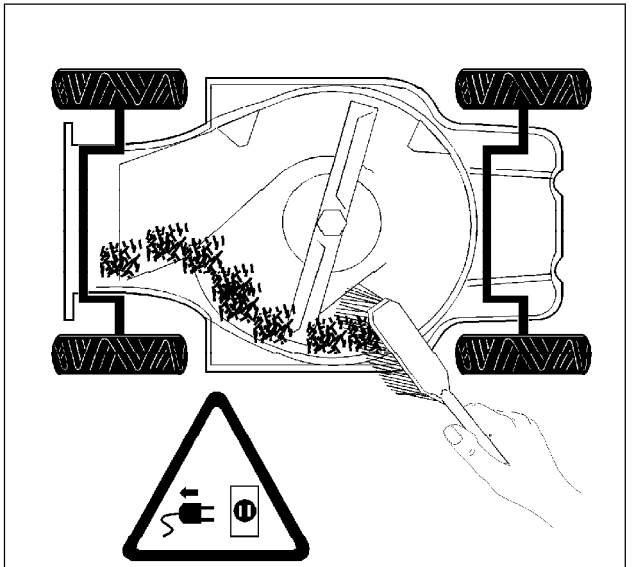

19

4.2 Recycling

For recycling the Recycler plug must be inside the ejection channel.

1. Ensure that the motor and the cutter stand still.
2. Open the ejection door.
3. Push the Recycler plug into the ejection channel. The Recycler plug must lock (Fig.18)
4. Close the ejection door.

To remove the Recycler plug, rum the motor off and wait until the cutter stands still.

Open the ejection door and pull the Recycler plug out. Close the ejection door.

- Ensure that the cutter is always sharp. Notches may be removed by means of a file (mind the unbalance).
- After each mowing the grass rests must be removed from the bottom side of the mower, from the deflectors and from the Recycler plug (Fig. 19).
- With grass heights greater than or equal to 15 cm, the lawn should be mowed in two steps.
- In hot summers, adjust the cutting height on C, D, E or F. Do not cut off more than a third of the grass leaf.

When mowing in high grass, you should select a higher cutting adjustment first. Then mow with the usual adjustment.

Lumpy grass and chockings inside the mowing channel effect a throttling or stop of the motor. In such cases, you should mow at least one step higher.

© 1998 by The Toro Company

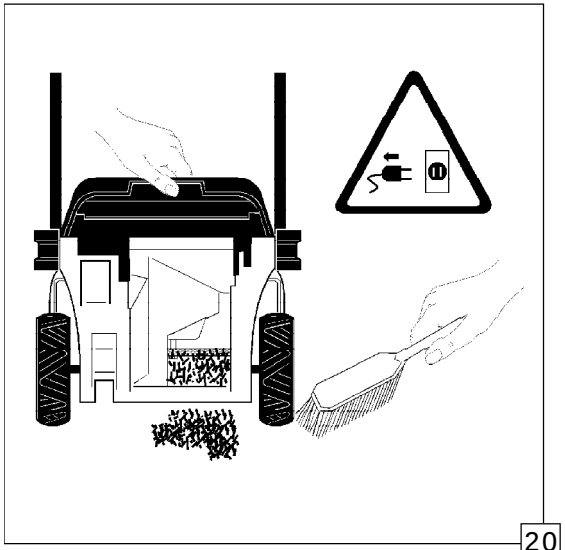

20

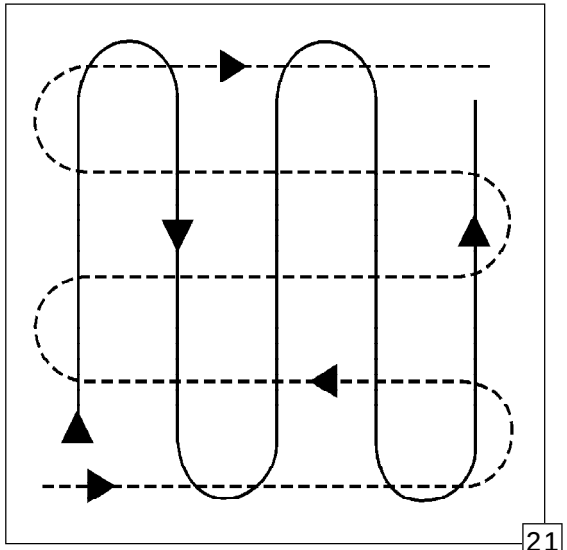

21

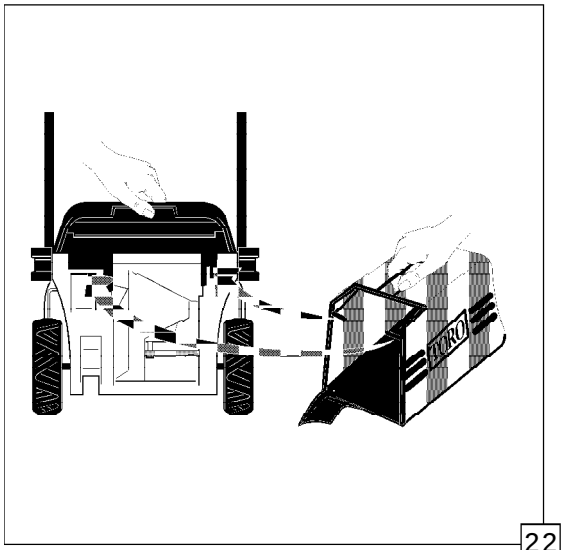

22

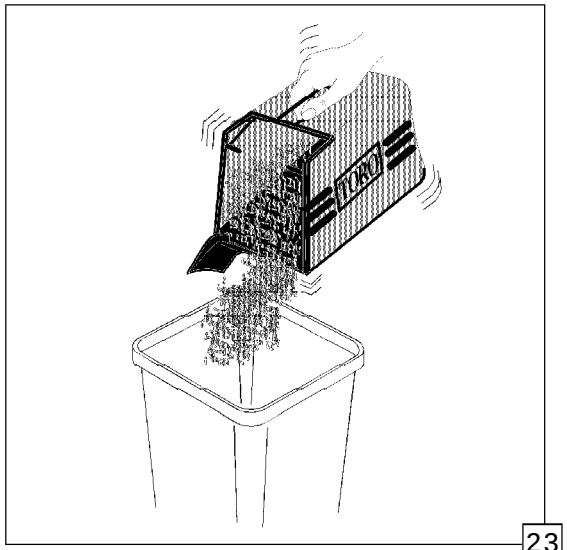

23

Should the motor have stopped due to the conditions inside the mower housing and block when restarting, it is absolutely necessary to clear the mowing tunnel from grass rests (Fig. 20).

To clean the mower, disconnect the mains plug.

Change the mowing direction frequently (Fig. 21).

In case of an unsatisfactory mowing result:

1. Resharpen the cutters (Ensure not to create an unbalance).
2. Mow at a slower pace.
3. Increase the cutting height by one or two steps.
4. Mow your lawn in shorter intervals.
5. Mow only 2/3 or half the mowing width, in order to give the mower the opportunity of self-cleaning.

4.3 Mowing with the grass-collecting device

Never remove the grass-collecting device while the motor is running - danger of injury!

1. **Ensure that the motor and the cutter stand still. Remove the Recycler-plug!**
2. Clean the grass ejection area from grass rests.
3. Hang the grass-collecting device into the mounting on the mower housing (Fig. 22).
4. Close the ejection door up to the grass-collecting device.

To empty the grass-collecting device, turn the motor off and wait until the cutter stands still.
Disconnect the mains plug when leaving the mower.

Remove the grass-collecting device and tilt it a bit to the back so that no grass will fall out.
Dump the full grass-collecting device by shaking it slightly (Fig. 23).

© 1998 by The Toro Company

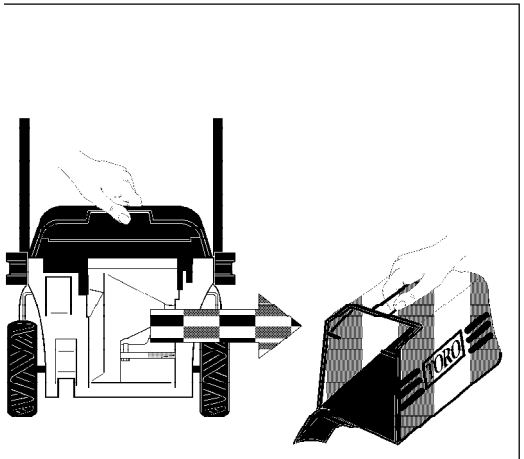

24

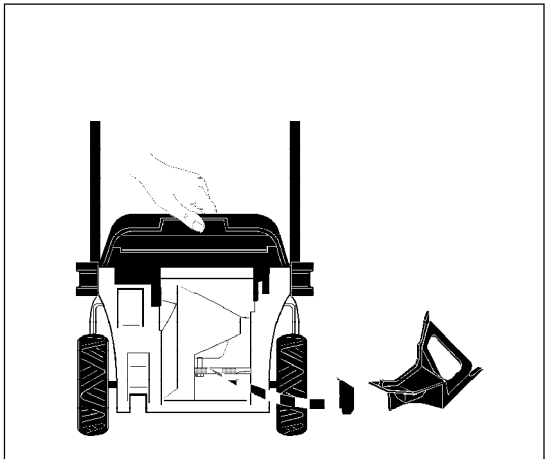

25

4.4 Mowing without the grass-collecting device

Never remove the grass-collecting device while the motor is running - danger of injury!

Mowing without the grass-collecting device is recommended for mowing high grass or if no grass collection is desired. Remove the grass-collecting device and the Recycler-plug (Fig. 24 + 25).

© 1998 by The Toro Company

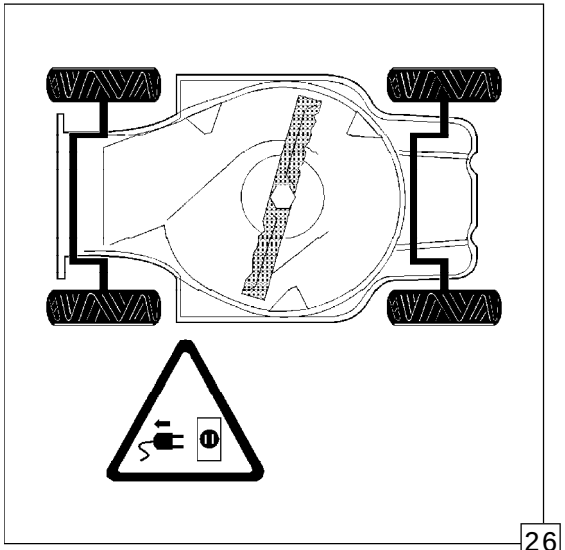

26

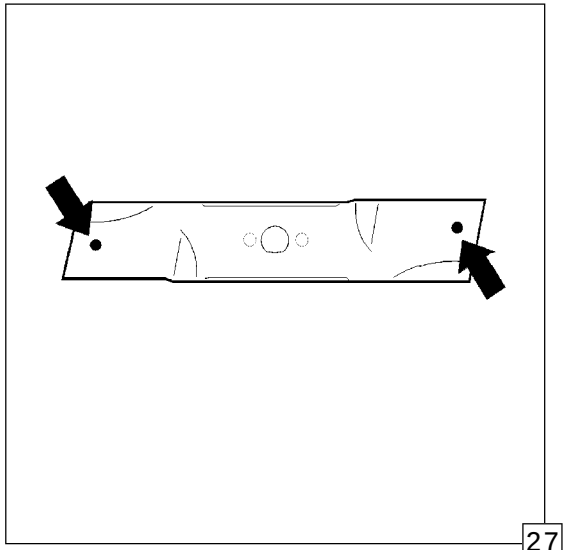

27

5 Maintenance and upkeep

5.1 Checking the cutter for damages

5.2 Cleaning the mower

5.3 Storing the mower

5.1 Checking the cutter for damages

Stop the motor, wait until the cutters stand still and disconnect the mains plug, when working on the mower. Danger of injury!

After the mower has hit against a hard object as e. g. a stone, proceed as follows:

- Turn the mower off and disconnect the mains plug (Fig. 26).
- Lay the mower on its right side.
- Carefully check the cutting edge of the cutters for defects.

Bent or damaged cutters must not be used any longer. They have to be replaced.

Use only original TORO cutters. They have been designed especially for this unit and guarantee a perfect performance, safety and a long service life.

Have dull cutters sharpened.
For safety reasons a resharpening may be executed only up to the mark (Fig. 27).

If the same cutter is in use for too long, this might lead to wear and changes of the cutter section. A break of the cutter can be the consequence, and parts of the cutter can be hurled away.

Operate the mower only with perfect cutters!
Only use original TORO spare parts or parts released by TORO.

© 1998 by The Toro Company

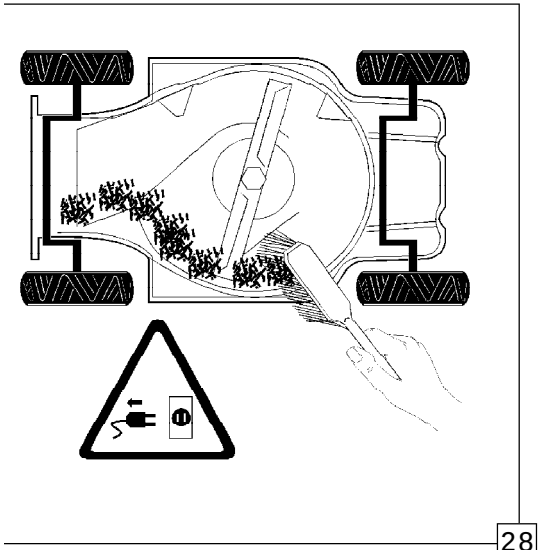

28

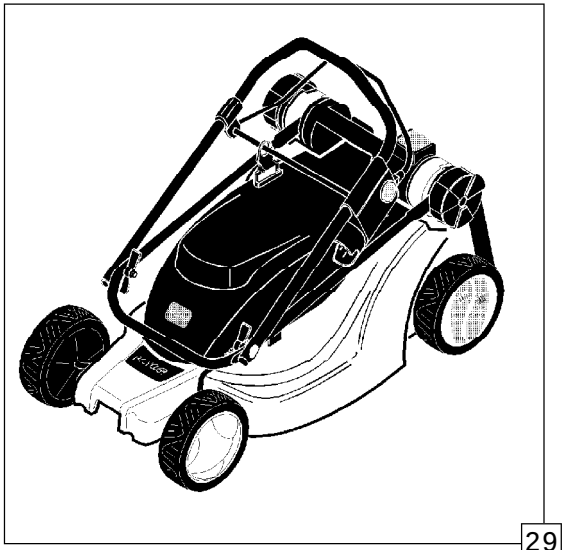

29

5.2 Cleaning the mower

Before cleaning the mower, stop the motor, wait until the cutters stand still and disconnect the mains plug. Danger of injury!

Do not wash the mower down with water. Danger of motor breakdown!

Wipe off dirt and grass rests with a rag.
Lay mower on its side and clean the bottom side of the mower (Fig. 28).

5.3 Storing the mower

Disconnect the mains cable from the mower and store it in a safe place.

Clean the mower.
Check all bolts, screws and nuts.
Replace damaged parts.

Use only original TORO spare parts resp. go to a specialized TORO-dealer.

Store the mower in a clean, dry place.
The handlebar may be folded down for this purpose (Fig. 29).

Do not pinch the cable.

© 1998 by The Toro Company

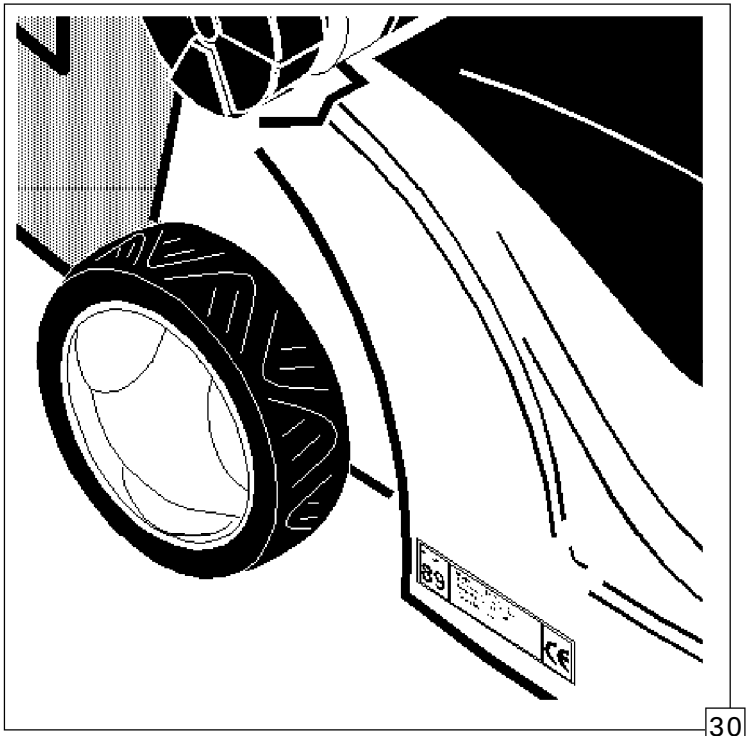

6 Spare parts and troubleshooting

6.1 Hints on spare parts ordering
6.2 Customer service address
6.3 Troubleshooting
6.4 Spare Parts
6.4.1 Motor and Blade Assembly
6.4.2 Chassis Parts
6.4.3 Bag & Recycling Parts
6.4.4 Handle Parts

6.1 Hints on spare parts ordering

Use only original TORO spare parts or parts released by the manufacturer.
This is the only way to guarantee for your safety and the safety of others.

The nameplate bears type and serial number of your TORO lawn mower (Fig. 30).
Always give both numbers when ordering spare parts or corresponding.

Insert the type and serial number of your TORO lawn mower here:

Type number:

Serial number:

Spare parts can be purchased at any TORO customer service by giving the type and serial number.

6.2 Customer service address

Insert here the address of your nearest TORO customer service:

© 1998 by The Toro Company

TROUBLESHOOTING

Problem	Possible cause	Remedial measures
Motor does not start	1. Mains cable is not or not properly connected. 2. Defective motor. 3. Defective mains supply (fuse or switch) 4. Too much grass rests inside the housing.	1. Connect the mains plug. 2. Go to an authorized TORO customer service station. 3. Check the mains supply. 4. Disconnect the mains plug. Clean the housing.
Coasting time of cutter longer than 3 seconds.	1. Defective coasting brake.	1. Go to an authorized TORO customer service station.
Motor vibrates or runs erratically.	1. Cutter screw is loose. 2. Cutter is not balanced.	1. Tighten the cutter screw with 15 Nm. 2. Have the cutter balance checked at a TORO customer service station.
Motor stops during operation.	1. Motor is overloaded due to the existing circumstances.	1. Increase cutting height. Mow at a slower walking pace.

© 1998 by The Toro Company

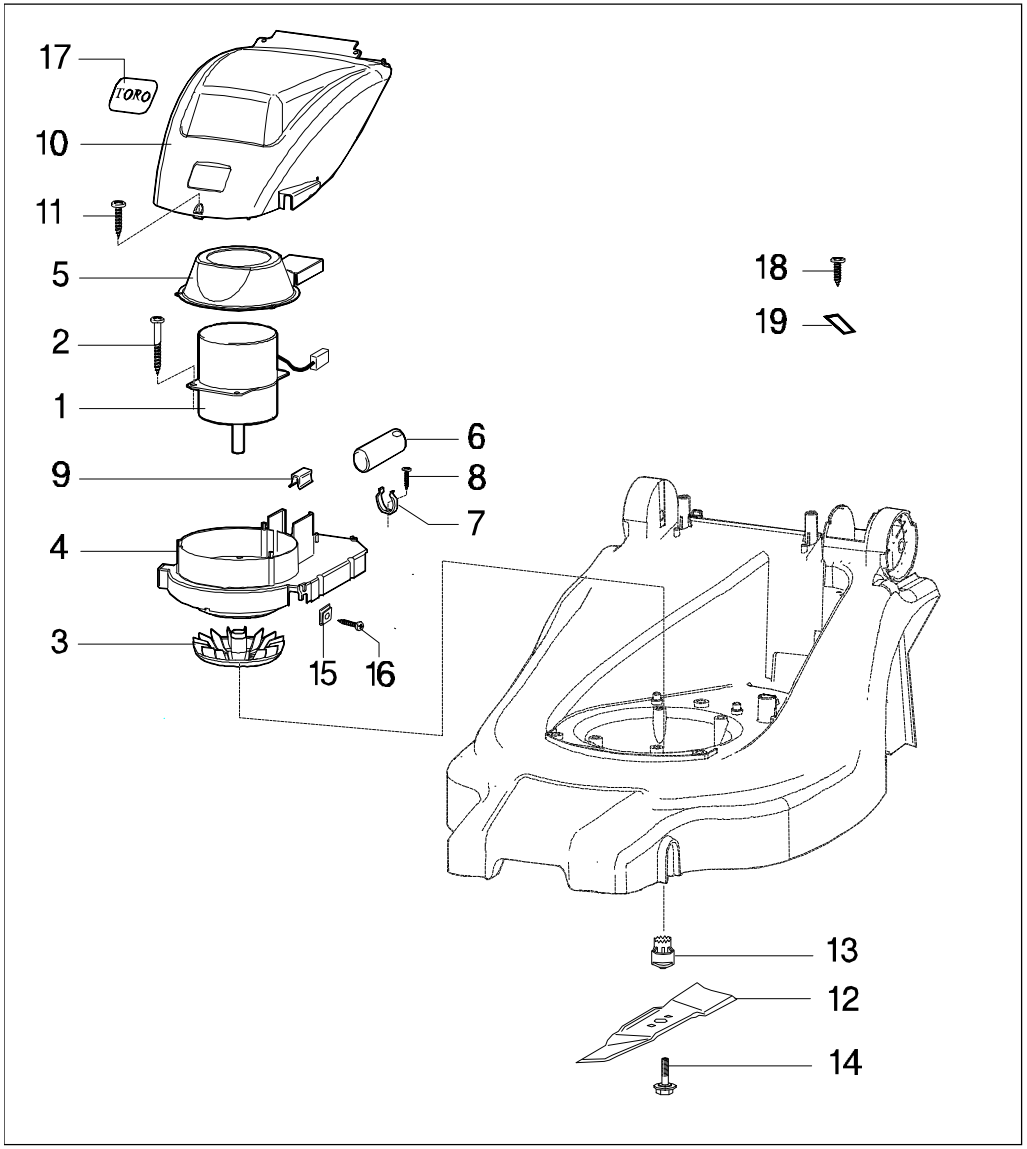

6.4 Spare Parts

6.4.1 Motor and Blade Assembly

Model - No. 21060, 21061 & 21062

Ref.-No.	Part -No.	Description	No.Used
1	95-6742	Motor	1
2	95-6723	Screw	4
3	95-6548	Fan	1
4	95-6748	Adapter-Motor	1
5	95-6624	Baffle-Motor	1
6	95-6632	Capacitor	1
7	95-6584	Clip-Capacitor	1
8	95-6598	Screw	1
9	95-6620	U-Clip	1
10	95-6714	Shroud-Motor (incl. Ref.#17)	1
11	95-6732	Screw	1
12	95-6582	Blade	1
13	95-6767	Retainer-Blade	1
14	95-6743	Screw-Blade	1
15	95-6619	Snap on Nut-shroud	2
16	95-6623	Screw	2
17	92-2289	Plate-Logo	1
18	95-6532	Screw	2
19	95-6692	Release-Cable	1

Model - No. 21070, 21071 & 21072

Ref.-No.	Part -No.	Description	No.Used
1	95-6764	Motor	1
2	95-6663	Screw	4
3	95-6548	Fan	1
4	95-6754	Adapter-Motor	1
5	95-6624	Baffle-Motor	1
6	95-6633	Capacitor	1
7	95-6584	Clip-Capacitor	1
8	95-6598	Screw	1
9	95-6620	U-Clip	1
10	95-6715	Shroud-Motor (incl. Ref.#17)	1
11	95-6698	Screw	1
12	95-6583	Blade	1
13	95-6767	Retainer-Blade	1
14	95-6743	Screw-Blade	1
15	95-6619	Snap on Nut-shroud	2
16	95-6623	Screw	2
17	92-2289	Plate-Logo	1
18	95-6532	Screw	2
19	95-6692	Release-Cable	1

© 1998 by The Toro Company

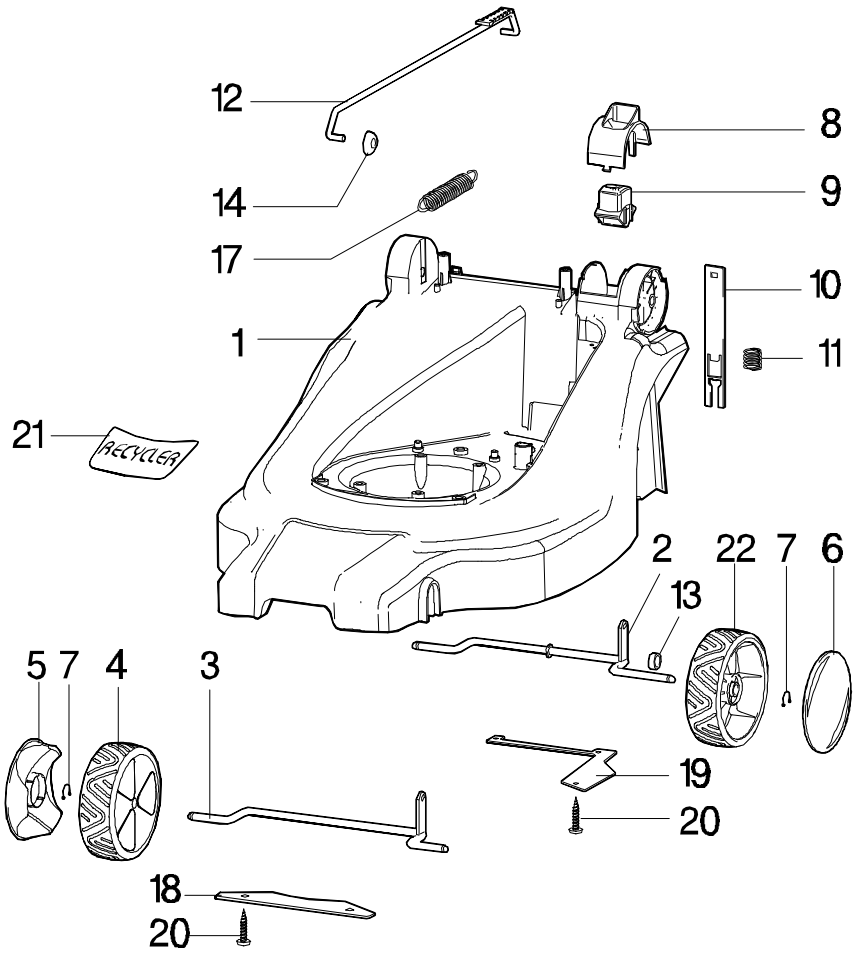

6.4.2 Chassis Parts

Model - No. 21060, 21061 & 21062

Ref.-No.	Part -No.	Description	No.Used
1	95-6768	Housing	1
2	95-6735	Axle-Rear	1
3	95-6734	Axle-Front	1
4	95-6665	Wheel Assy. (incl. Ref. # 5 & # 7)	3
5	95-6543	Cover-Wheel	3
6	95-6716	Cover-Wheel (Smart-Wheel)	1
7	95-6544	Spring Clamp-Wheel	4
8	95-6563	Cover Knob	1
9	95-6562	Knob-HOC	1
10	95-6506	Latch-HOC	1
11	95-6564	Spring-HOC	1
12	95-6738	Rod-HOC (inl.*)	1
13	95-6741	Spacer	1
14	95-6565	Push Nut	1
*	65-6709	Decal-HOC	1
17	95-6505	Balance Spring-HOC	1
18	95-6700	Plate-Axle Front	1
19	95-6699	Plate-Axle Rear	1
20	95-6560	Srew	5
21	95-6521	Decal Recycler 34cm	1
22	95-6666	Smartwheel Assy. (incl. Ref. 6 & 7)	1

* not illustrated

Model - No. 21070, 21071 & 21072

Ref.-No.	Part -No.	Description	No.Used
1	95-6749	Housing	1
2	95-6737	Axle-Rear	1
3	95-6736	Axle-Front	1
4	95-6665	Wheel Assy. (incl. Ref. # 5 & # 7)	3
5	95-6543	Cover-Wheel	3
6	95-6716	Cover-Wheel (Smart-Wheel)	1
7	95-6544	Spring Clamp-Wheel	4
8	95-6563	Cover Knob	1
9	95-6562	Knob-HOC	1
10	95-6526	Latch-HOC	1
11	95-6564	Spring-HOC	1
12	95-6750	Rod-HOC (inl.*)	1
13	95-6741	Spacer	1
14	95-6565	Push Nut	1
*	65-6709	Decal-HOC	1
17	95-6525	Balance Spring-HOC	1
18	95-6670	Plate-Axle Front	1
19	95-6667	Plate-Axle Rear	1
20	95-6560	Srew	5
21	95-6527	Decal Recycler 40cm	1
22	95-6666	Smartwheel Assy. (incl. Ref. 6 & 7)	1

* not illustrated

© 1998 by The Toro Company

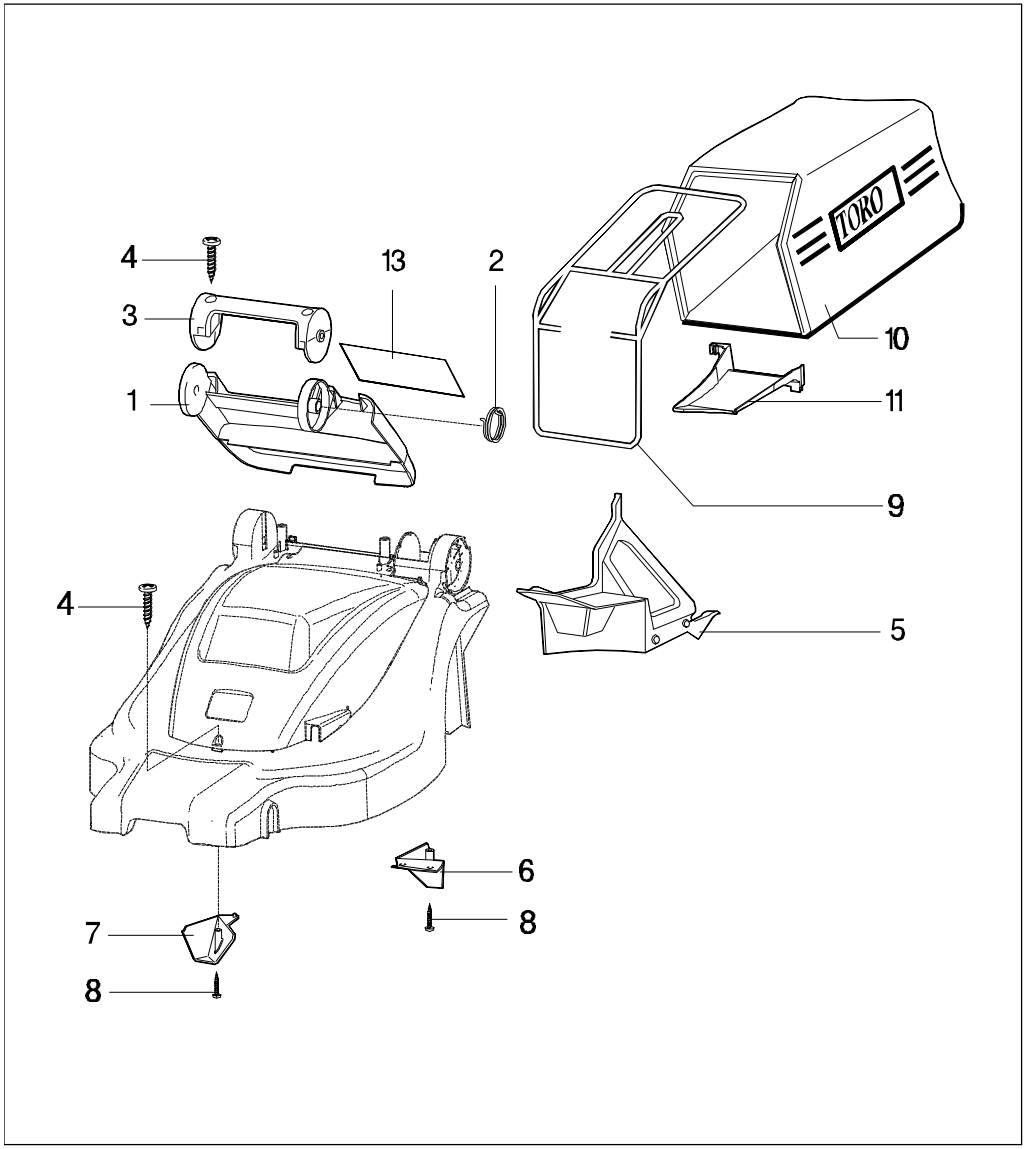

6.4.3 Bag & Recycling Parts

Model - No. 21060, 21061 & 21062

Ref.-No.	Part -No.	Description	No.Used
1	95-6712	Rear Door (incl. Ref.#13)	1
2	95-6739	Spring-Rear Door	1
3	95-6508	Handle	1
4	95-6732	Screw	3
5	95-6578	Recycler Plug	1
6	95-6577	Kicker-Middle	1
7	95-6765	Kicker-Front	1
8	95-6560	Screw	3
9	95-6553	Frame-Bag	1
10	95-6551	Bag	1
11	95-6555	Ramp-Bag	1
13	95-6572	Decal-Safety	1
*	95-6774	Manual-GB	1
*	65-6773	Manual-German/ Dutch/ French/ Italien	1

* not illustrated

Model - No. 21070, 21071 & 21072

Ref.-No.	Part -No.	Description	No.Used
1	95-6711	Rear Door (incl. Ref.#13)	1
2	95-6739	Spring-Rear Door	1
3	95-6751	Handle	1
4	95-6698	Screw	3
5	95-6579	Recycler Plug	1
6	95-6575	Kicker-Middle	1
7	95-6753	Kicker-Front	1
8	95-6560	Screw	3
9	95-6552	Frame-Bag	1
10	95-6550	Bag	1
11	95-6554	Ramp-Bag	1
13	95-6572	Decal-Safety	1
*	95-6770	Bushing-Rear Door	1
*	95-6774	Manual-GB	1
*	65-6773	Manual-German/ Dutch/ French/ Italien	1

* not illustrated

© 1998 by The Toro Company

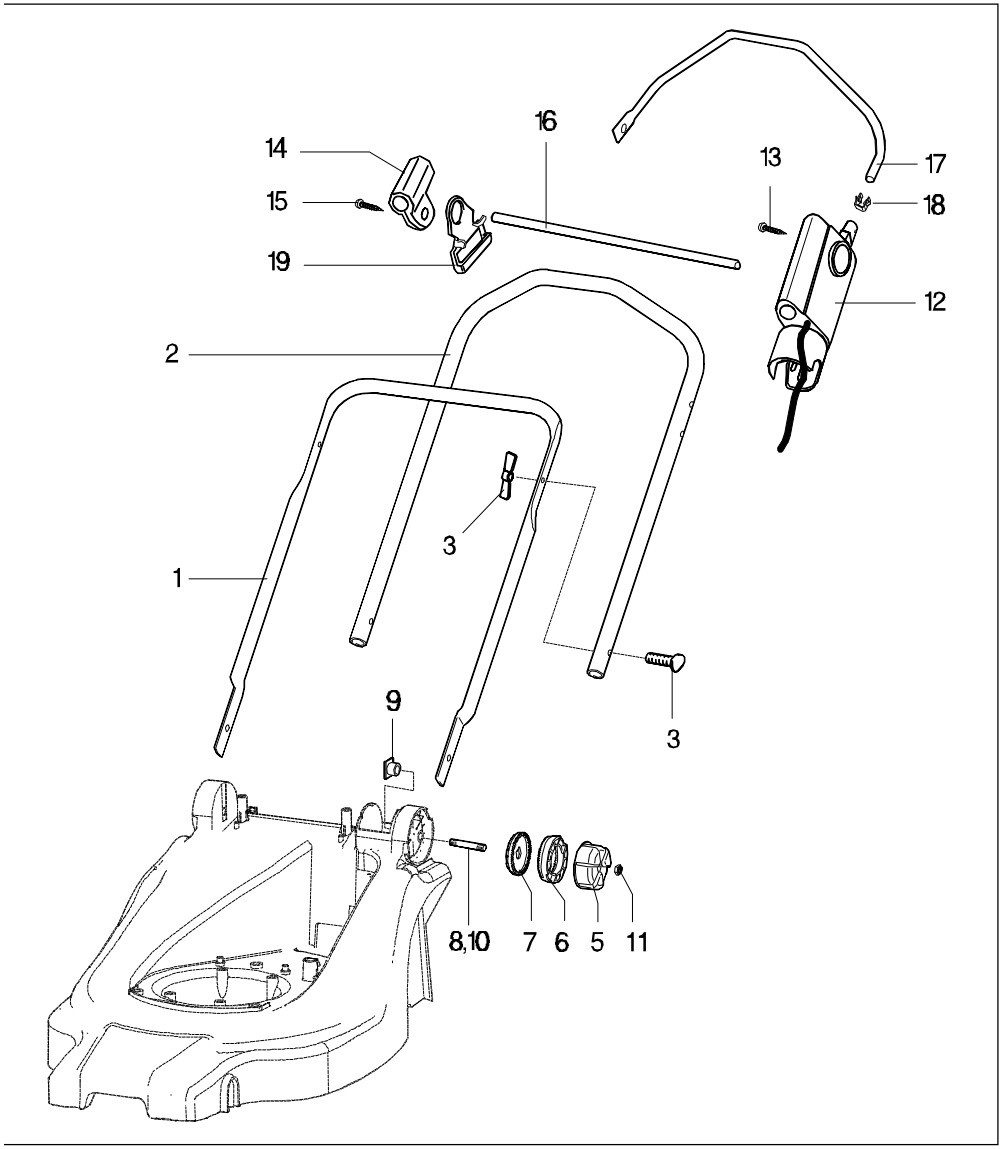

6.4.4 Handle Parts

Model - No. 21060, 21061 & 21062

Ref.-No.	Part -No.	Description	No.Used
1	95-6515	Handle Lower	1
2	95-6517	Handle Upper	1
3	95-6718	Bolt & Screw Set- Handle	2
5	95-6713	Adjusting Knob-Handle (incl. Ref. # 11)	2
6	95-6567	Adjusting Disk-Handle	2
7	95-6568	Holding Disk-Handle	2
8	95-6703	Bold	2
9	95-6740	Nut	2
11	95-6569	Nut M8	2
12	95-6605	Switch Assy.	1
12	95-6631	Switch Assy. CH	1
12	95-6630	Switch Assy. GB	1
*	65-6684	Cord-Power	1
13	95-6598	Srew Switch Assy.	2
14	95-6596	Mount-Bail	1
15	95-6598	Screw-Mount	1
16	95-6535	Rod	1
17	95-6529	Bail	1
18	95-6602	Clamp-Bail	1
19	95-6597	Cable Holder	1

Model - No. 21070, 21071 & 21072

Ref.-No.	Part -No.	Description	No.Used
1	95-6514	Handle Lower	1
2	95-6516	Handle Upper	1
3	95-6718	Bolt & Screw Set- Handle	2
5	95-6713	Adjusting Knob-Handle (incl. Ref. # 11)	2
6	95-6567	Adjusting Disk-Handle	2
7	95-6568	Holding Disk-Handle	2
8	95-6694	Bold-left	1
9	95-6740	Nut	2
10	95-6777	Bold-right	1
11	95-6569	Nut M8	2
12	95-6605	Switch Assy.	1
12	95-6631	Switch Assy. CH	1
12	95-6630	Switch Assy. GB	1
*	65-6684	Cord-Power	1
13	95-6598	Srew Switch Assy.	2
14	95-6596	Mount-Bail	1
15	95-6598	Screw-Mount	1
16	95-6607	Rod	1
17	95-6606	Bail	1
18	95-6602	Clamp-Bail	1
19	95-6597	Cable Holder	1

© 1998 by The Toro Company

7 Hints on tending the lawn

7.1 Spring
7.2 Summer
7.3 Autumn
7.4 Winter

7.1 Spring

Cleaning: The first cut and the cleaning should be done two or three weeks before the normal growth starts. To mow, the cutting height should be adjusted in such way that approx. 1.5 cm of the resting grass will be cut off. Thus an early greening of the lawn will be effected. In using the grass-collecting sack available as accessory, the winter litter can be removed, first, however, metal objects, stones, broken glass etc. which can damage the grass-collecting sack, must be gathered.
Mellowing: The soil should be treated with a mechanical mellowing device. Thus air, water and fertilizer may enter more easily and a deep rooting is stimulated.
Fertilization: For the fertilization of the lawn, a special lawn fertilizers is to be spread on the latter in early spring. This fertilization is to be repeated according to the demands you make on your lawn. Who wants to have a lush-green, dense lawn till into the winter, spreads the last dose in late summer. In any case it is advisable to have the fertilizer get soaked thoroughly shortly after the spreading - by rain or sprinkling. Hereby it is to be made sure that the fertilizer will not paste up (e. g. on uneven ground or when watering with a hose with a too strong jet of water). Moreover, you should not fertilize on new-mown grass, but some days before or after mowing. Each fertilization leads to a denser turf, however, the growth will be hastened at the same time. Therefore you should pay special attention to mowing in good time, otherwise the precious flagellate grass will be suppressed. It is a big mistake to cut high grass real short. Especially in case of dryness, your lawn will get brown spots, if you cut the grass too short, which are often falsely referred to as damages caused by fertilization.
Watering: Sufficient watering is important, if you want to get a healthy lawn. Deep watering, when the grass needs it the most (shortly before withering), stimulates a deep rooting. Frequent and shallow watering effects a concentration of the roots near the surface and stimulates the weed growth.
Mowing: Frequent mowing is imperative for keeping your lawn healthy. It would be best to mow with such frequency that each time not more that 1/3 of the grass leaf is being cut. Thin or newly-sown lawns should be cut to 3.5 cm. This is to be repeated for about four or five weeks, so that the lawn will grow and become more dense.
Weed, insect and disease control: Most specialized dealers sell special chemicals for the control of the most different weeds, insects and diseases. The manufacturers' instructions as to the frequency of application, environmental effects and use of the specified means are to be observed in any case.
Sowing: Although the autumn is the most favourable season for this work, you can sow lawn in the course of the usual spring treatment.

7.2 Summer

Mowing: During the hot and dry summer months the lawn should not be cut too short, because this would let the grass get too dry and withered. When mowing with the grass-collecting device, weeds, seeds of weed and any other undesired plants can be removed with it.
Mellowing: According to the condition of the soil, a mellowing is due from time to time, especially if it is a dry summer.
Watering: In the hot summer months, withered grass is an indication for water demand. Deep watering is advisable during these months. Besides the common way of sprinkling by means of garden hoses, sprinkling systems to be installed into the soil are available, which are also manufactured by TORO. These sprinkling systems work automatically, however, they are also available for manual operation. The company PARGA Park- und Gartentechnik, 74385 Pleidelsheim, Gottlieb-Daimler-Straße, will be pleased to send you detailed information material.

7.3 Autumn

Mowing: In autumn you should mow according to the same rules as have been said for the summer months. In autumn you should mow as long as the grass growth demands it. When using the grass-collecting device, the leaves will gather in the sack automatically and slightly cut up, and thus appropriate for composting.
Hints on cutting the leaves: You can also use the recycler for cutting the fallen leaves or other garden waste. If you want to store the leaves in plastic sacks, however, the number sacks to be filled will be smaller, since the leaves have been cut up before and thus they are reduced in volume. When working with the grass collecting device, part of the cut material will still get onto the lawn, where it can serve as fertilizer giving the soil important and precious nutrients until the next spring.

- Ensure yourself before mowing that the leaves are dry.
- Before you stop to recycle ensure yourself that approx. 50 % of the lawn is still to be seen on the mown area.
- In order to collect all the leaves and cut them up very finely, it is useful to walk slower and thus mix all the particles into the lawn.
- In case of lots of oak leaves, it is recommended to spread some lime onto the lawn in spring, in order to absorb the folic acid.

Watering: Since the soil should be damp at the beginning of the winter months, a regular watering in autumn is as important as in the summer months.
Sowing: This is the most suitable season for laying a lawn and for the resowing of existing lawn of thin growth.

7.4 Winter

Preparing the lawn for the winter: Who wants to have a beautiful, lush-green and hard-wearing lawn, should cover it every two to three years with compost or humous soil before the break of winter. After spreading the fine-crumbled humous soil, it should be raked into the sod thoroughly.

© 1998 by The Toro Company



The Toro Company, 8111 Lyndale Ave. So. , Bloomington, MN 55420 - 1196, USA

95-6774