Form No. 3412-209 Rev C

GeoLink® Spray System Finishing Kit

Serial Number 314999999 and Before Multi Pro® 5800 Turf Sprayer

Model No. 131-7262

Installation Instructions

The GeoLink™ spray system kit is an attachment for a turf spray application vehicle and is intended to be used by professional, hired operators in commercial applications. It is designed primarily for spraying on well-maintained lawns in parks, golf courses, sports fields, and on commercial grounds.

Visit Toro directly at www.Toro.com for product safety and operation training materials, accessory information, help finding a dealer, or to register your product.

Safety

⚠ WARNING

Chemical substances used in the spray system may be hazardous and toxic to you, bystanders, animals, plants, soils, or other property.

- **Carefully read and follow the chemical warning labels and safety data sheets (SDS) for all chemicals used and protect yourself according to the chemical manufacturer's recommendations. For example, use appropriate personal protective equipment (PPE), including face and eye protection, gloves, or other equipment to guard against personal contact with a chemical.**
- **There may be more than 1 chemical used and information on each chemical should be assessed.**
- **Refuse to operate or work on the sprayer if this information is not available.**
- **Before working on a spray system, clean the machine ensure that the spray system has been triple rinsed and neutralized according to the recommendations of the chemical manufacturer(s) and that all the valves have been cycled 3 times.**
- **Verify that there is an adequate supply of clean water and soap nearby, and immediately wash off any chemicals that contact you.**

© 2019—The Toro® Company
8111 Lyndale Avenue South
Bloomington, MN 55420

Register at www.Toro.com.

CE

Original Instructions (EN)
Printed in the USA
All Rights Reserved

3412-209 C

Installation

Loose Parts

Use the chart below to verify that all parts have been shipped.

Procedure	Description	Qty.	Use
1	No parts required	–	Prepare to install the kit.
2	No parts required	–	Remove the optional Pro Control XP Spray System.
3	No parts required	–	Disconnect the rear wire harness from the optional attachment.
4	Switch plug (Electric Hose-Reel Kit—Toro Part No. 99-7420) Switch plug (Pivoting Hose-Reel Kit—Toro Part No. 99-7420)	2 1	Disconnect the optional Hand Spray-Wand Kit or Electric Hose-Reel Kit.
5	Switch plug (Pivoting Hose Reel Kit—Toro Part No. 99-7420)	1	Disconnect the optional Pivoting Hose-Reel Kit.
6	Tube assembly—Toro Part No. 114-9553 Cable tie	2 8	Disconnect the optional Foam-Marker Kit.
7	No parts required	–	Disconnect the ultra sonic boom kit.
8	No parts required	–	Disconnect the optional Chemical Pre-Mix Kit.
9	No parts required	–	Disconnect the optional EU Compliance Kit.
10	No parts required	–	Remove the center section cover (11 nozzle) of the optional Covered Boom Kit.
11	No parts required	–	Disconnecting the pressure-sense tube for the dash gauge (for machines without an optional Hose Reel Kit).
12	No parts required	–	Remove the undercarriage shroud.
13	Rear wire harness	1	Remove the rear wire harness for the machine.
14	Cable tie Switch plug	1 1	Remove the rate-control switch.
15	No parts required	–	Remove the boom-section valves and the agitation valve.
16	Cable tie	1	Remove the boom sections.
17	Rear wire harness Cable ties	1 5	Assembling the rear wire harness to the machine.
18	No parts required	–	Remove the manifold mount for the 3-boom section system.
19	Manifold mount (10-valve system)	1	Install the manifold mount for the 10-valve system.

Procedure	Description	Qty.	Use
20	Hose (1 x 41 inches) Supply hose (1 x 23-1/8 inches) and straight-barbed fitting Agitation bypass hose (1 x 10 inches) and 90° barbed fitting	1 1 1	Install the hoses at the left side of the manifold mount.
21	No parts required	–	Install the rear wire harness.
22	Outer center-section truss frame (left—long) Center-section truss frame (middle—short) Outer center-section truss frame (right—long) Flange-head capscrew (3/8 x 1 inch) Flange locknut (3/8 inch) Lower cradle assembly	1 1 1 4 1	Prepare the new center boom section.
23	No parts required	–	Install the new center boom section.
24	Flow meter Flange clamp 76 mm (3 inches) Gasket (2-1/4 inches outside diameter) Reducer adapter Flange clamp 51 mm (2 inches) Gasket (1-5/16 inches outside diameter) Barbed-flange fitting (1 inch) Hose (1 x 7-1/4 inches) Hose clamp Pressure transducer and manifold Hose (1 x 8-1/2 inches) R-clamp Flange-head bolt (5/16 x 3/4 inch) Flange locknut (5/16 inch)	1 2 2 2 1 1 1 1 4 1 1 1 1 1	Install the flow meter and pressure transducer.
25	Hydraulic hose (1/4 x 24-3/4 inches)	4	Assemble the boom-lift cylinders.
26	Nylon-flange bushing	4	Install the outer boom sections.
27	Supply hose—279 cm (110 inches) Supply hose—234 cm (92 inches) Supply hose—188 cm (74 inches) Supply hose—81 cm (32 inches)	2 2 4 2	Install the sprayer-nozzle hoses.
28	No parts required	–	Connect the pressure-sense tube for the dash gauge.

Procedure	Description	Qty.	Use
29	Navigation receiver—GeoLink precision spray system kit (Model 41623)	1	Install the navigation receiver.
	Receiver mount	1	
	U-bolt	2	
	RTK-antenna bracket (optional CDMA RTK correction modem kit or GSM RTK correction modem kit)	1	
	Flange locknut (3/8 inch)	4	
	Hex-head bolt (5 x 16 mm)	3	
	Washer (5 mm)	3	
	Cellular antenna (optional CDMA RTK correction modem kit or GSM RTK correction modem kit)	1	
	Coaxial cable (optional CDMA RTK correction modem kit or GSM RTK correction modem kit)	1	
	Serial label (part of the X25 or the X30 GeoLink Precision Spray System Kits)	1	
30	Sprayer Monitor—GeoLink precision spray system kit 41623	1	Install the sprayer monitor.
	Display hood	1	
	Ball mount—GeoLink precision spray system kit 41623	1	
	Monitor arm—GeoLink precision spray system kit 41623	1	
	Reinforcement plate	1	
	Flange-head bolt (1/4 x 1-1/2 inches)	4	
	Flange locknut (1/4 inch)	4	
31	Sprayer controller—GeoLink precision spray system kit 41623	1	Install the sprayer controller and connect the rear wire harness.
	Bolt (4 x 10 mm)	4	
	Flange locknut (4 mm)	4	
32	Data Harness (navigation system)—GeoLink precision spray system kit (Model 41623)	1	Install the wire harnesses for the navigation components.
	Electrical Harness (navigation system)—GeoLink precision spray system kit (Model 41623)	1	
	Cable tie	5	
33	No parts required	–	Install the undercarriage shroud.
34	90° elbow with side port (Toro Part No. 131-3726)	1	Connect the optional Hand Spray Wand Kit, Electric Hose Reel Kit, or Pivoting Hose Reel Kit.
	Flange clamp and gasket (Toro Part No. 127-9829)	1	
	Shutoff valve (Toro Part No. 130-7321)	1	

Procedure	Description	Qty.	Use
35	Wire harness—optional Foam Marker Finishing Kit 130-8292	1	Connect the optional Foam Marker Kit.
	Cable tie—optional Foam Marker Finishing Kit 130-8292	5	
	Relay—optional Foam Marker Finishing Kit 130-8292	1	
	Flange-head bolt (#10-24 x 1/2 inch)—Foam Marker Finishing Kit 130-8292	1	
	Locknut (#10-24—optional Foam Marker Finishing Kit 130-8292)	1	
	Auxiliary fuse block—Toro Part No. 92–2641	1	
	Fuse (15 A—optional Foam Marker Finishing Kit 130-8292)	1	
	Flange-head bolts (6 x 12 mm)—optional Foam Marker Finishing Kit 130-8292	4	
	Mounting bracket (foam-control switch)—optional Foam Marker Finishing Kit 130-8292	1	
	3-position paddle switch (foam-control switch)—optional Foam Marker Finishing Kit 130-8292	1	
	2-position rocker switch (compressor on/off switch)—optional Foam Marker Finishing Kit 130-8292	1	
36	Fluid-shutoff valve—Toro Part No. 130-7324	1	Connect the optional Chemical Pre-Mix Kit.
	Retainer—Toro Part No. 131-0235	2	
	Mount (fluid-shutoff valve)—Toro Part No. 131-3725-03	1	
	Flange locknut (1/4 inch, stainless steel)—Toro Part No. 119-6897	2	
	Pressure relief-hose assembly 25 x 273 mm (1 x 10-3/4 inches)—Toro Part No. 131-9647	1	
	Supply-hose assembly 25 x 470 mm (1 x 18-1/2 inches)—Toro Part No. 131-9648	1	
	Agitation bypass-hose assembly 25 x 305 mm (1 x 12 inches)—Toro Part No. 131-9649	1	
	90° barb fitting 25 mm (1 inch)—Toro Part No. 131-3727	1	
	Drain hose 25 x 1587 mm (1 x 62-1/2 inches)—Toro Part No. 117-7957	1	
37	No parts required	–	Connect the optional EU Compliance Kit.

Procedure	Description	Qty.	Use
38	Cover extension assembly (12-nozzle—Toro Part No. 120-0621) Pop rivet (Toro Part No. 114439) Support bracket (center section cover—Toro Part No. 131–3703–03) Clip nut (Toro Part No. 94-2413) Flange-head bolt (3/8 x 1-1/4 inches—Toro Part No. 110-5050) Flange locknut (3/8 inch—Toro Part No. 104-8301) Cover strap (Toro Part No. 120–0629) Flange-head bolt (5/16 x 1-1/4 inches—Toro Part No. 323-36)	1 22 4 4 16 16 2 4	Assemble the optional Covered Boom Kit.
39	No parts required	–	Connect the optional Tank-Rinse Kit.
40	Belt-tensioning bracket Alternator (60 A) Nut (10 mm) Alternator adapter harness	1 1 1 1	Replace the alternator.
41	No parts required	–	Complete the installation of the GeoLink spray system finishing kit.

Note: Determine the left and right sides of the machine from the normal operating position.

1

Preparing to Install the Kit

No Parts Required

Preparing the Sprayer Tank and Optional Rinse Tank

1. Park the machine on a level surface.
2. Engage the parking brake.
3. Extend the left and right boom sections to the horizontal position.
4. Clean the sprayer; refer to Cleaning the Sprayer in the *Operator's Manual* for the machine.

   Important: **Completely empty the sprayer tank before installing the GeoLink Spray System Finishing Kit.**
5. **For machines with the optional Tank Rinse Kit, perform the following:**

   A. Pump the water from the rinse tank into the sprayer tank; refer to Operating the Rinse Kit in the *Installation Instructions* for the Tank Rinse Kit.

   B. Drain the water from the sprayer tank; refer to Cleaning the Sprayer in the *Operator's Manual* for the machine.

   C. Remove the 2 bolts (3/8 x 2-3/4 inches), 2 flange locknut (3/8 inch), and 4 washers (3/8 inch) that secure the straps for the rinse tank to the manifold mount (Figure 1).

   Note: Retain the bolts, nuts, and washers for installation in 19 Installing the Manifold Mount for the 10-Valve System (page 45).

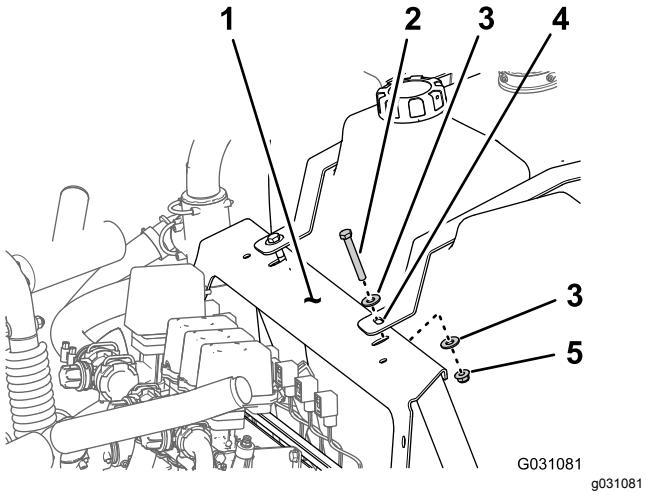

Figure 1

1. Manifold mount
2. Flange locknut (3/8 inch)
3. Washer (3/8 inch)
4. Rinse-tank strap
5. Bolt (3/8 x 2-3/4 inches)

D. Secure the rinse tank to the sprayer tank with a piece of rope.

E. Shut off the engine and remove the key.

Disconnecting the Battery

⚠ WARNING

Electrical sparks can cause the battery gasses to explode, resulting in personal injury.

Incorrect battery cable routing could damage the sprayer and cables, causing sparks.

- **Always disconnect the negative (black) battery cable before disconnecting the positive (red) cable.**
- **Always connect the positive (red) battery cable before connecting the negative (black) cable.**

Battery terminals or metal tools could short against metal sprayer components, causing sparks.

- **When removing or installing the battery, do not allow the battery terminals to touch any metal parts of the sprayer.**
- **Do not allow metal tools to short between the battery terminals and metal parts of the sprayer.**
- **Always keep the battery strap in place to protect and secure the battery.**

1. Remove the battery cover and disconnect the negative (black—ground) cable from the battery post (Figure 2 and Figure 3).

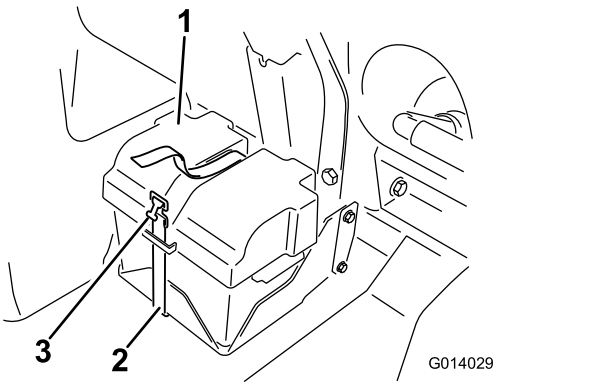

Figure 2

1. Battery cover
2. Strap
3. Buckle

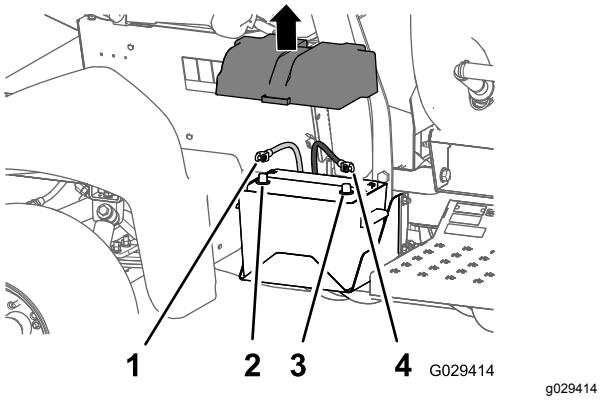

Figure 3

1. Positive battery cable
2. Positive battery post
3. Negative battery post
4. Negative battery cable

2. Disconnect the positive (red) cable from the battery post (Figure 3).
3. Tilt both seats forward and secure them by moving the prop rods into the detents at the end of the slots at the center console base.
4. Allow the engine to cool completely.

2

Removing the Optional Pro Control XP Spray System

No Parts Required

Disconnecting the Flow-Meter Harness

At the back of the machine, remove the 3-socket connector of the machine harness from the 3-pin connector of the flow-meter harness (Figure 4).

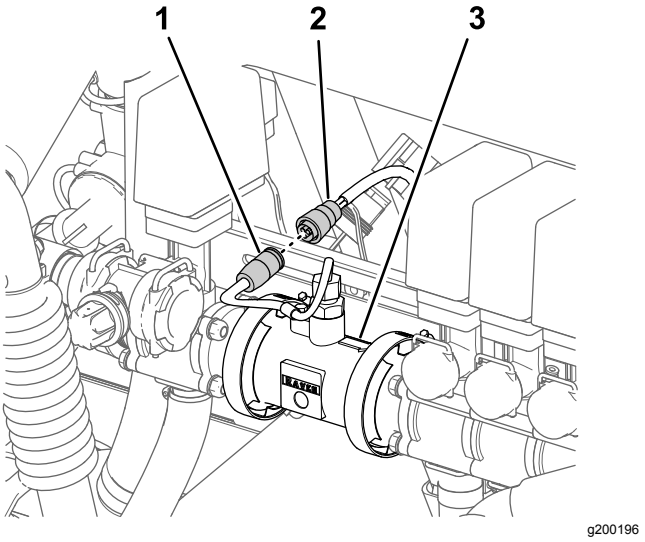

Figure 4

1. 3-pin connector (flow-meter harness)
2. 3-socket connector (machine harness)
3. Flow meter

Removing the Pro Control Console

1. At the front of the pro control console, disconnect the 3-pin connector of the wire harness of the machine from the 3-socket connector of the control console (Figure 5).

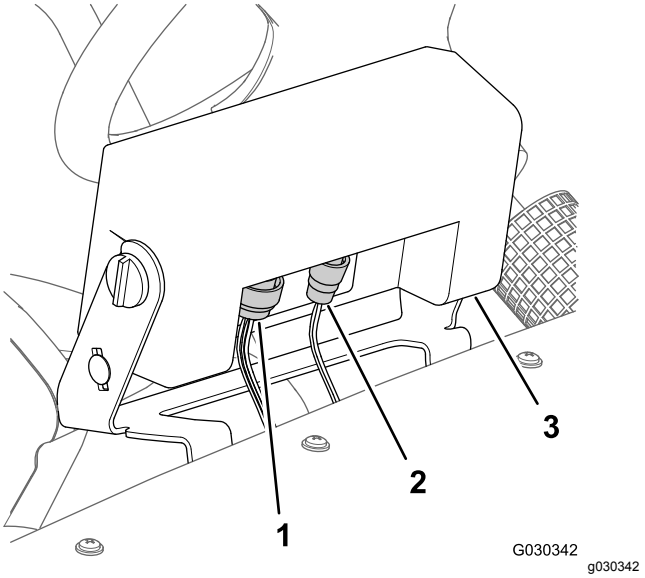

Figure 5

1. 16-pin connector (machine wire harness)
2. 2-pin connector (machine wire harness)
3. Pro Control console

2. Disconnect the 16-socket connector from the 16-socket connector of the control console (Figure 5).
3. Remove the knobs at each side of the control console (Figure 6).

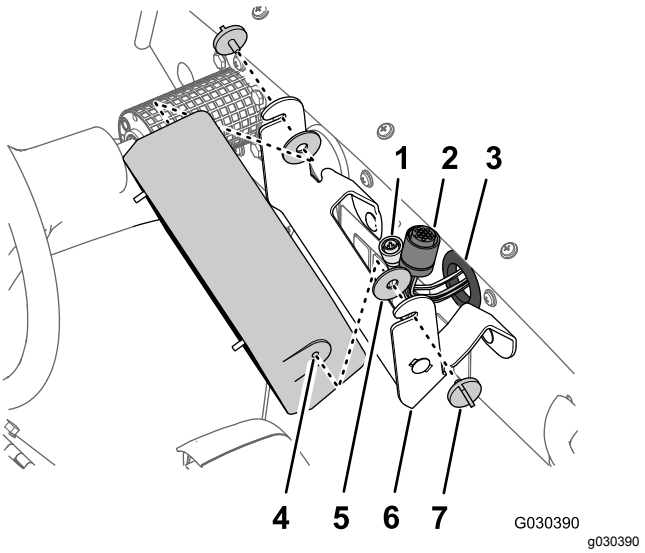

Figure 6

1. 3-socket connector
2. 16-socket connector
3. Grommet (dash)
4. Control console
5. Rubber washer
6. Support bracket
7. Knob

4. Remove the control console and the 2 rubber washers from the support bracket (Figure 6).

5. Push the harness, the 3-socket connector, and 16-socket connector through the grommet in the dash (Figure 6).
6. Remove the 2 carriage bolts (5/16 x 3/4 inch) and 2 flange locknut (5/16 inch) that secure the support bracket to the dash panel, and remove the support bracket from the machine (Figure 7).

   Note: You no longer need the control console, rubber washers, support bracket, carriage bolts, and locknut that you removed from the machine.

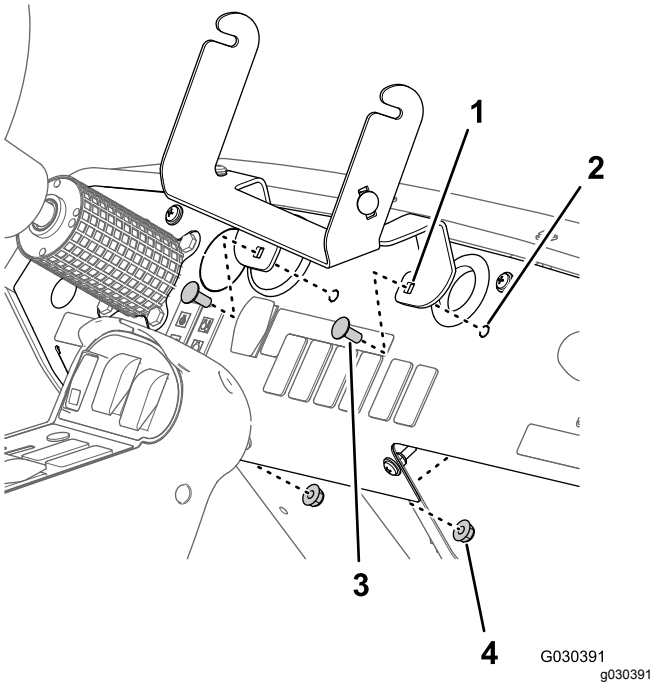

Figure 7

1. Support bracket	3. Carriage bolt (5/16 x 3/4 inch)
2. Dash panel	4. Flange locknut (5/16 inch)

3

Disconnecting the Rear Wire Harness from the Optional Attachments

No Parts Required

Disconnecting the Hand Spray-Wand Kit or the Electric Hose-Reel Kit

At the control box for the hand-spray gun or electric-hose reel, disconnect the 6-pin connector for the control box harness from the 6-socket connector of the rear, main harness of the machine (Figure 8 and Figure 9).

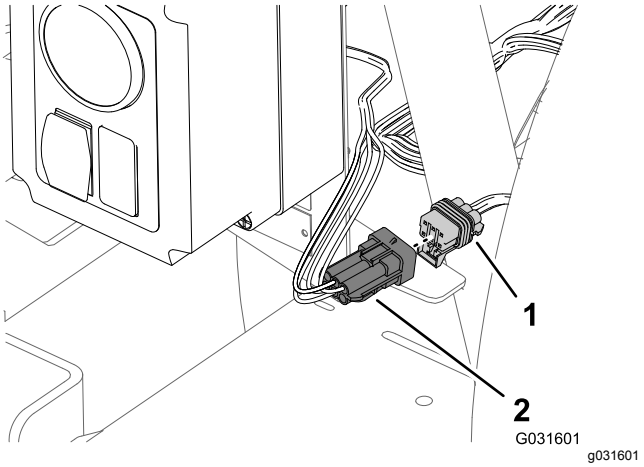

Figure 8

Control box—hand spray-wand kit

1. 6-socket connector(rear, main harness of the machine)	2. 6-pin connector (control box harness)

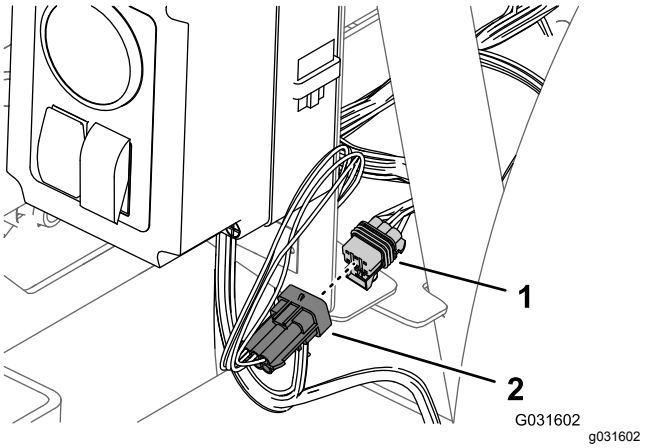

Figure 9

Control box—electric hose-reel kit

1. 6-socket connector(rear, main harness of the machine)	2. 6-pin connector (control box harness)

Disconnecting the Pivoting Hose-Reel Kit

1. At the back of the machine, locate the wire harness for the pivoting hose-reel kit at the back of the sprayer tank (Figure 10).

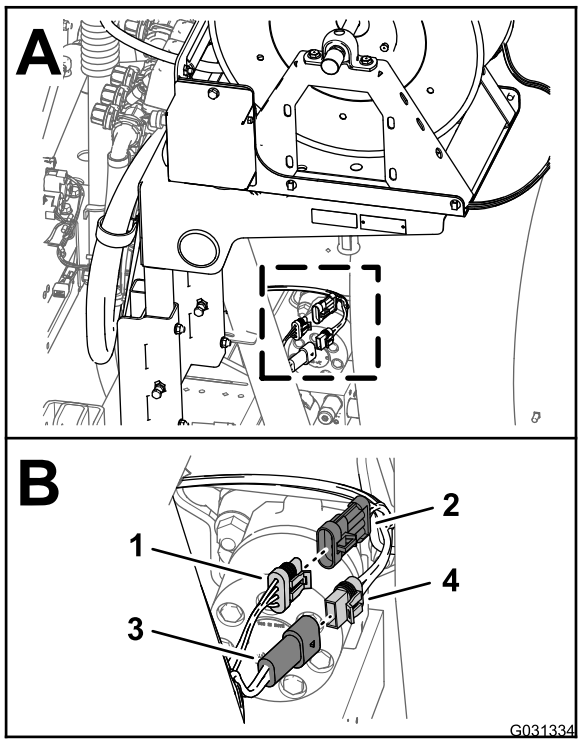

Figure 10

1. 3-socket connector (rear, main harness)
2. 3-pin connector (harness—electric hose reel)
3. 2-socket pin (rear, main harness)
4. 2-socket connector (harness—electric hose reel)

2. Disconnect the 2-socket connector of the harness for the electric hose reel from the 2-pin connector of the rear, main harness (Figure 10).
3. Disconnect the 3-pin connector of the harness for the electric hose reel from the 3-pin socket of the rear, main harness (Figure 10).

Disconnecting the Compressor for the Foam Marker Kit

1. At the back of the foam-marker tank, locate the wire harness at the compressor (Figure 11).

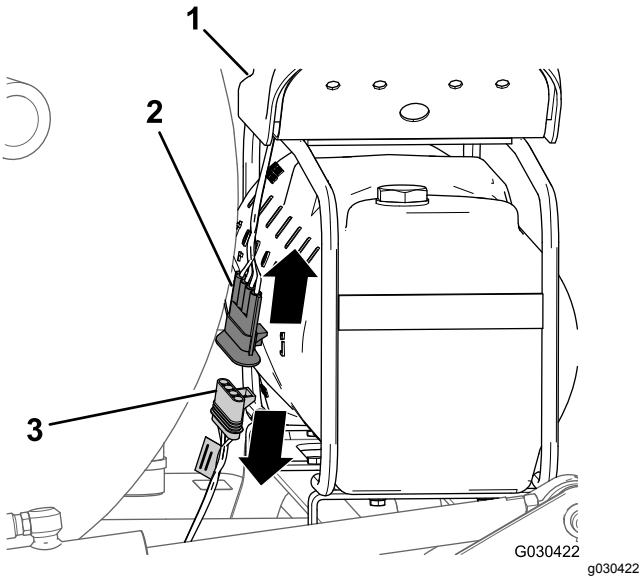

Figure 11

1. Compressor
2. 4-pin connector (wire harness for the compressor)
3. 4-socket connector (wire harness for the finishing kit)

2. Disconnect the 4-pin connector of the compressor harness from the from the 4-socket connector of the rear wire harness of the machine (Figure 11).

Disconnecting the Control Valve for the Chemical Pre-Mix Kit

1. At the back of the machine, locate the 3-socket connector of the rear, main wire harness for the machine labeled EDUCTOR (Figure 12).

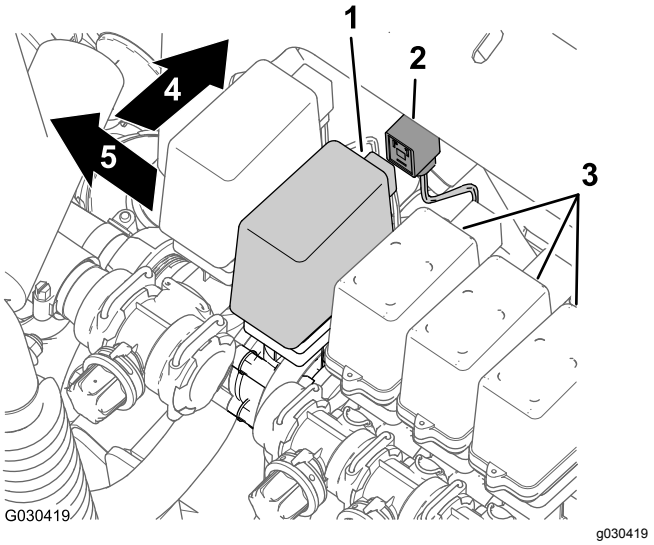

Figure 12

1. 3-socket connector (eductor valve)
2. Eductor valve
3. Boom-section valves
4. Front of the machine
5. Left

2. Remove the eductor connector of the main harness from the 3-blade connector of the eductor valve (Figure 12).

Disconnecting the Pump for the Tank Rinse Kit

1. At the back of the machine, press together the sides of the rinse-pump cover and lift the cover up until the tabs of the cover clear the slots in the saddle plate, and remove the cover from the machine (Figure 13).

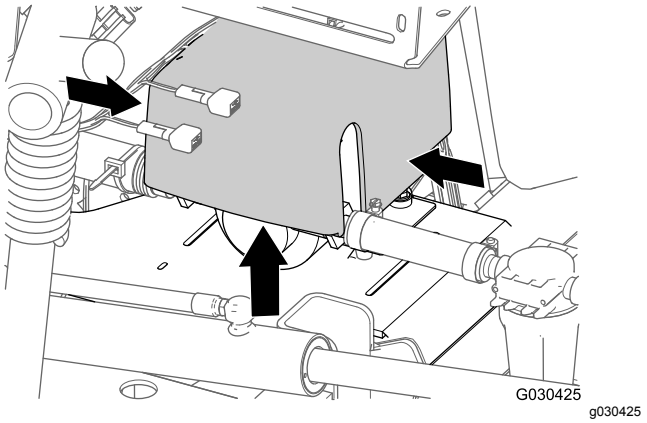

Figure 13

2. Disconnect the 6-pin connector of the rinse-pump harness from the 6-socket connector of the rear, main harness (Figure 14).

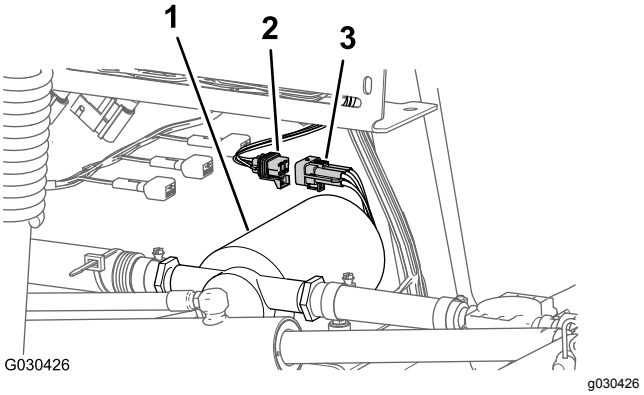

Figure 14

1. Rinse pump
2. 6-socket connector (rear, main harness)
3. 6-pin connector (rinse-pump harness)

4

Disconnecting the Optional Hand Spray Wand Kit or Electric Hose Reel Kit

Parts needed for this procedure:

2	Switch plug (Electric Hose-Reel Kit—Toro Part No. 99-7420)
1	Switch plug (Pivoting Hose-Reel Kit—Toro Part No. 99-7420)

Removing the Pressure Control and On-Off Switches

1. At the control box for the electric hose reel kit, fully loosen the 4 cover screws that secure the cover to the control box and carefully pull out the cover (Figure 15).

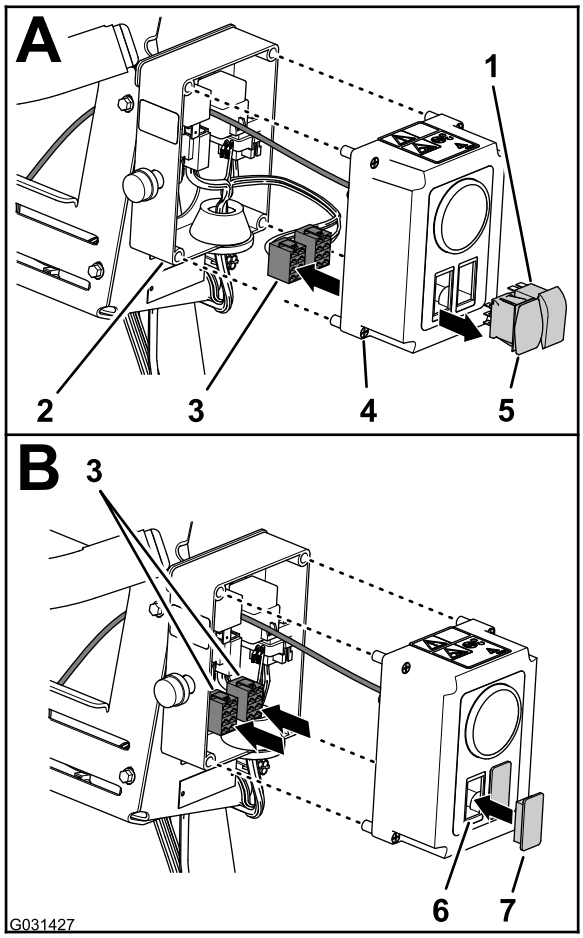

g031427

Figure 15

1. On-Off switch
2. Control box
3. 8-socket connector (control-box harness)
4. Cover screw (control box)
5. Pressure-control switch
6. Opening (control-box cover)
7. Switch plug

2. Remove the switch(s) from the control box as follows:
   - **Electric hose reel kit**
     A. Disconnect the 2 connectors (8-socket) for the control-box harness from the pressure-control switch and the On-Off switch (Figure 15).
     B. Route the 2 connectors (8-socket) inside the control box (Figure 15).
     C. Squeeze the lock tabs of the 2 switches and press the switches out of the cover for the control box (Figure 15).

     Note: You no longer need the switches that you removed from the machine.
   - **Hand spray wand kit**
     A. Disconnect the 8-socket connectors for the control-box harness from the pressure-control switch (Figure 16).

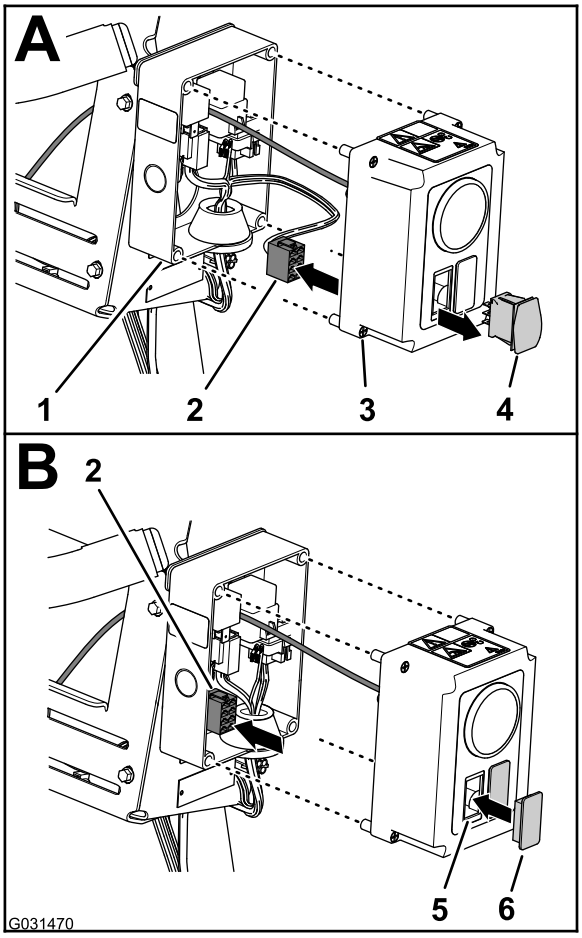

g031470

Figure 16

1. Control box
2. 8-socket connector (control-box harness)
3. Cover screw (control box)
4. Pressure-control switch
5. Opening (control-box cover)
6. Switch plug

     B. Route the 8-socket connector inside the control box (Figure 16).
     C. Squeeze the lock tabs of the switch and press the switch out of the cover for the control box (Figure 16).

     Note: You no longer need the switch that you removed from the machine.
3. Align the switch plug(s) to the opening(s) in the cover where you removed the switches (Figure 15 and Figure 16).
4. Insert the switch plug(s) into the cover until the plug(s) snap into the cover securely (Figure 15 and Figure 16).
5. Align the cover to the control box and secure the cover to the box with the 4 cover screws (Figure 15).

Disconnecting the Hoses and Tubing

1. At the 90° elbow at the right side of the pressure-control valve for the hose reel, press in the locking collar for the tube coupler and remove the pressure-sense tube for the pressure gauge of the hose reel (Figure 17).

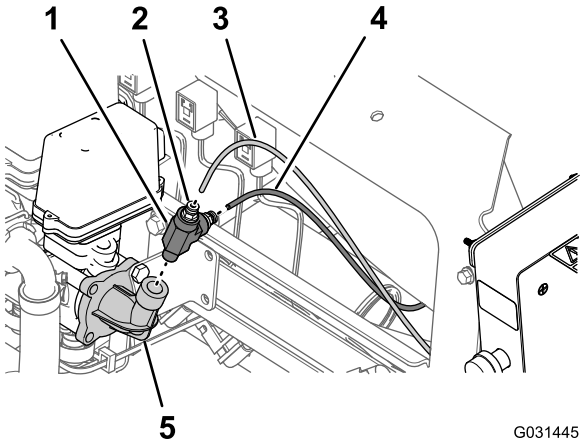

Figure 17

Electric hose-reel kit shown; the hand spray-wand kit is similar

1. T-fitting
2. Locking collar(tube coupler)
3. Pressure-sense tube (pressure gauge of the hose reel)
4. Pressure-sense tube (dash pressure gauge)
5. 90° elbow (pressure-control valve)

2. Press in the locking collar for the tube coupler and remove the pressure-sense tube for the pressure gauge in the dash of the machine (Figure 17).
3. Remove the T-fitting from the 90° elbow for the pressure-control valve (Figure 17).

   Note: Retain the T-fitting for installation in Installing the Hose and Sense Tubes (page 84).
4. Remove the hose clamp that secures the inlet hose for the hose reel to the barbed fitting of the pressure-control valve (Figure 18).

   Note: Retain the hose clamp for installation in Assembling the Hose and Fittings (page 83).

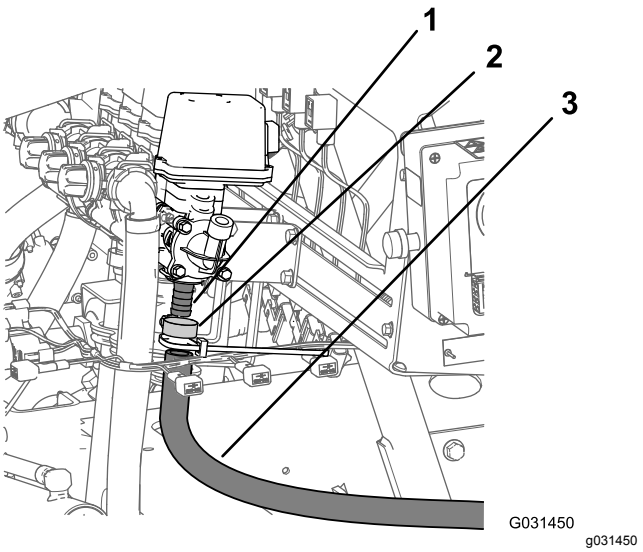

Figure 18

1. Barbed fitting (pressure-control valve)
2. Hose clamp
3. Inlet hose (electric hose reel)

5. Remove the inlet hose from the hose-reel valve (Figure 18).

Removing the Control Box from the Manifold Mount

1. Remove the 3 flange-head bolts (1/4 x 5/8 inch) and 3 serrated-flange nuts (1/4 inch) that secure the mounting plate for the control box to the manifold mount for the sprayer valves (Figure 19).

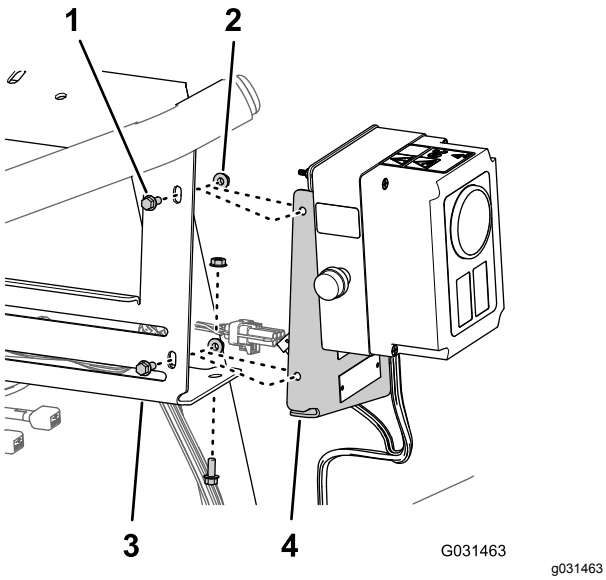

Figure 19

Electric hose-reel kit shown; the hand spray-wand kit is similar

1. Flange-head bolts (1/4 x 5/8 inch)
2. Serrated-flange nuts (1/4 inch)
3. Manifold mount (sprayer valve)
4. Mounting plate (control box)

2. Separate the mounting plate from the manifold mount (Figure 19).
3. Lift the control box from the machine and set the box aside.

   Note: Retain all hardware and components for installation in Installing the Control Box to the Manifold Mount (page 82).

5

Disconnecting the Optional Pivoting Hose Reel Kit

Parts needed for this procedure:

1	Switch plug (Pivoting Hose Reel Kit—Toro Part No. 99-7420)

Removing the Pressure Control Switch

1. Remove the 2 bolt (5/16 x 3/4 inch) and 2 locknut (5/16 inch) that secure the control box to the reel-mounting plate (Figure 20).

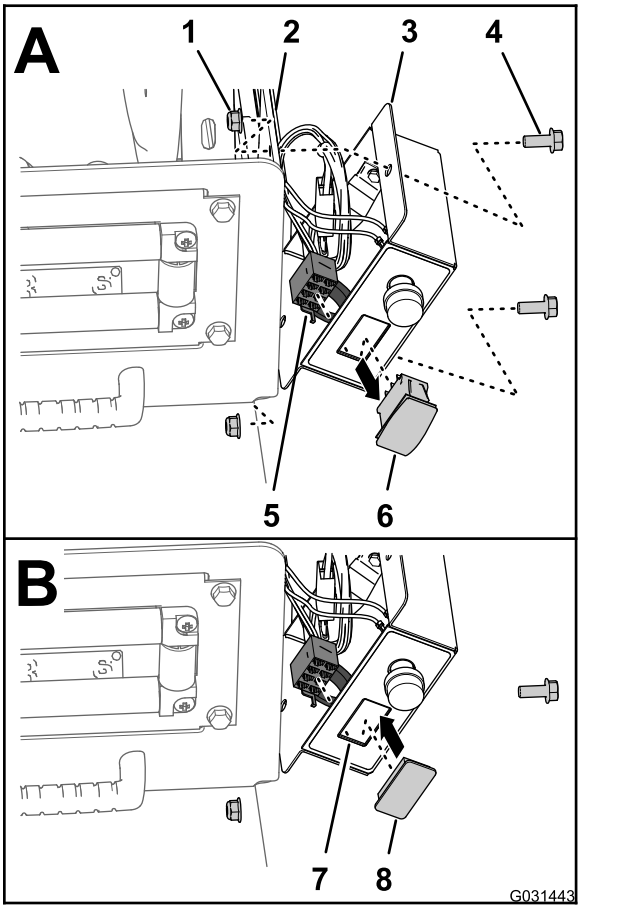

Figure 20

1. Locknut (5/16 inch)
2. Reel-mounting plate
3. Control box
4. Bolt (5/16 x 3/4 inch)
5. 8-socket connector (control-box harness)
6. Pressure-control switch
7. Opening (control-box cover)
8. Switch plug

2. Disconnect the 8-socket connector for the control box harness from the pressure-control switch (Figure 20).
3. Route the 8-socket connector inside the control box (Figure 20).
4. Squeeze the lock tabs of the pressure-control switch and press the switch out of the control box (Figure 20).

   Note: You no longer need the switch that you removed from the machine.
5. Align the switch plug to the opening in the control box where you removed the switch (Figure 20).
6. Insert the switch plug into the control box until the plug snaps into the cover securely (Figure 20).
7. Align the control box to the reel-mounting plate (Figure 20) and secure the box to the plate with the 2 bolt (5/16 x 3/4 inch) and 2 locknut (5/16 inch).

8. Torque the bolts and nuts to 1978 to 2542 N·cm (175 to 225 in-lb).

Disconnecting the Hoses and Tubing

1. At the right end of the pressure-control valve, remove the hose clamp that secures the inlet hose to the barbed fitting of the control valve and remove the hose from the fitting (Figure 21).

   Note: Retain the clamp for installation in Installing the Hose and Sense Tubes (page 84).

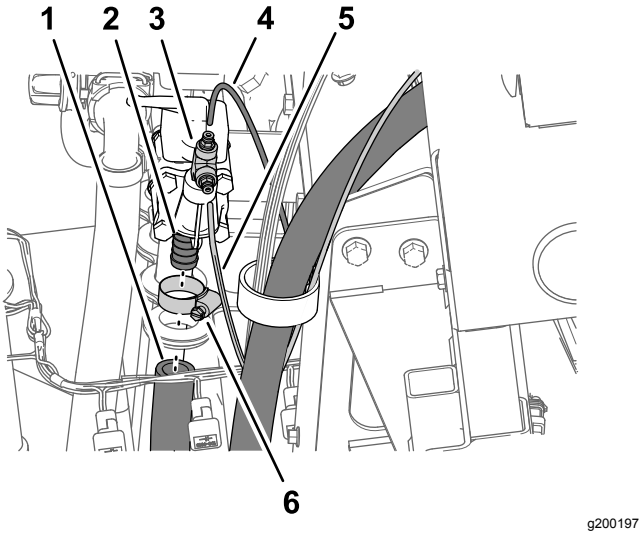

Figure 21

1. Inlet hose (pivoting hose reel)
2. Barbed fitting (pressure-control valve)
3. Tube coupler (T-fitting)
4. Pressure-sense tube (dash pressure gauge)
5. Pressure-sense tube (pressure gauge of the hose reel)
6. Hose clamp

2. Press in the locking collar for the tube coupler and remove the pressure-sense tube for the pressure gauge in the dash of the machine (Figure 21).
3. Press in the locking collar for the tube coupler and remove the pressure-sense tube for the pressure gauge of the hose reel (Figure 21).
4. Remove the T-fitting and tube couplers from the 90° elbow at the end of the pressure-control valve (Figure 21).

   Note: Retain the T-fitting and tube couplers for installation in Installing the Hose and Sense Tubes (page 84).

Removing the Pivoting-Hose Reel from the Manifold Mount

Lifting equipment capacity: 57 kg (125 lb)

1. Support the pivoting hose reel with lifting equipment with the specified capacity.
2. Remove the 2 flange-head bolts (3/8 x 2-1/4 inches) and 2 flange locknuts (3/8 inch) that secures the lower tube frame of the pivoting hose reel to the mounting bracket at the right frame channel of the machine (Figure 22).

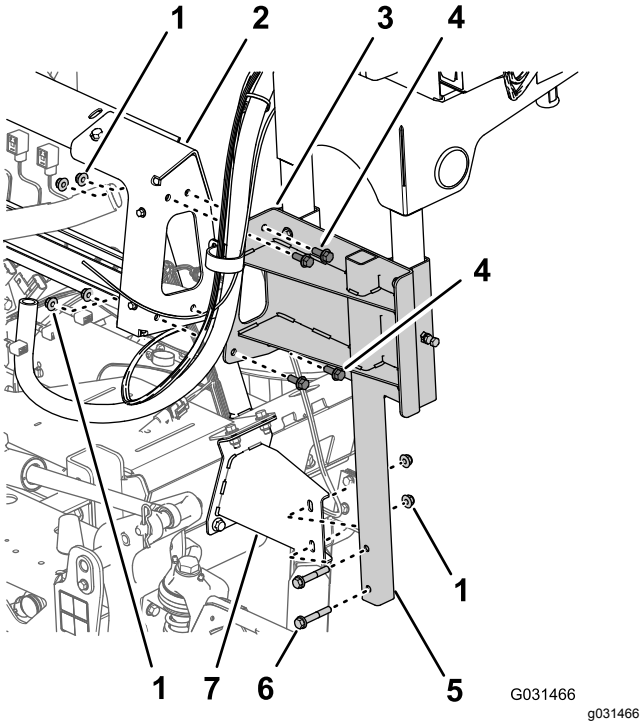

Figure 22

1. Flange locknuts (3/8 inch)
2. Manifold mount (sprayer valves)
3. Support channel (pivoting hose reel)
4. Flange-head bolts (3/8 x 1 inch)
5. Lower tube frame (pivoting hose reel)
6. Flange-head bolts (3/8 x 2-1/4 inches)
7. Mounting bracket (right frame channel of the machine)

3. Remove the 4 flange-head bolts (3/8 x 1 inch) and 4 flange locknuts (3/8 inch) that secure the support channel of the pivoting hose reel to the manifold mount for the sprayer valves (Figure 22).
4. Lift the pivoting-hose reel from the machine and set the reel aside.

   Note: Retain all hardware and components for installation in Installing the Pivoting Hose Reel to the Manifold Mount (page 83).

6

Disconnecting the Optional Foam Marker Kit

Parts needed for this procedure:

2	Tube assembly—Toro Part No. 114-9553
8	Cable tie

Removing the Liquid and Air Tubes from the Machine

1. At the connection panel of the compressor for the foam-marker kit, secure a cable tie around the clear and blue tubing for the right boom section (Figure 23).

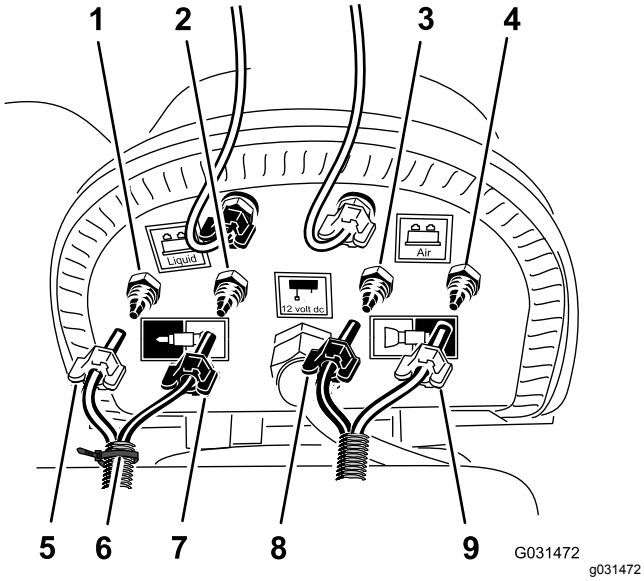

g031472

Figure 23

1. Compression fitting—water (right boom section—blue tube)
2. Compression fitting—air (right boom section—clear tube)
3. Compression fitting—water (left boom section—blue tube)
4. Compression fitting—air (left boom section—clear tube)
5. Compression nut—air (right boom section—blue tube)
6. Cable tie
7. Compression nut—water (right boom section—clear tube)
8. Compression nut (left boom section—blue tube)
9. Compression nut (left boom section—clear tube)

2. Loosen the compression nuts for the 2 clear and 2 blue tubes for the foam nozzles at the left and right boom sections (Figure 23).
3. Remove the 4 tubes from the compression fittings for the boom sections (Figure 23).
4. At the outer boom section, use a piece of tape to mark the left liquid and air tubes for the left boom section and the right liquid and air tubes for the right boom section.
5. Move the tubes for the foam nozzles at the left and right boom section rearward and through the R-clamp near the pivot point for the boom section (Figure 24).

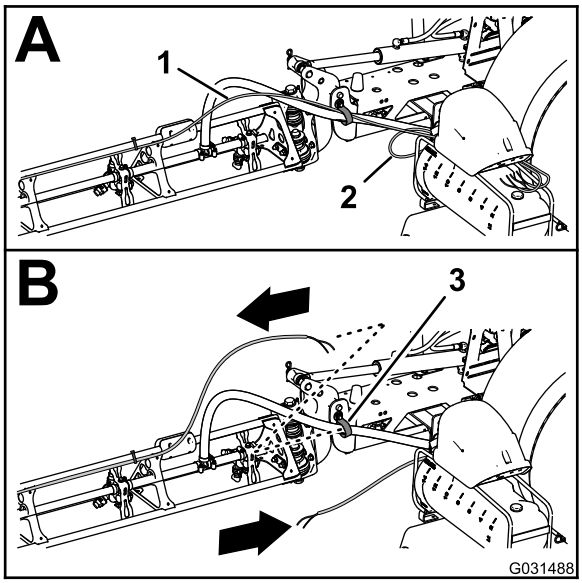

g031488

Figure 24

1. Tubing—foam-marker nozzle (right boom section)
2. Tubing—foam-marker nozzle (left boom section)
3. R-clamp

6. If your machine has the **center boom extension kit** installed, loosely secure the free end of the liquid and air tubes to the outer boom section, and skip the procedures for Preparing the New Tube Assemblies for the Foam-Marker Nozzles (page 17) and Installing the New Tube Assembly (page 18).

Preparing the New Tube Assemblies for the Foam-Marker Nozzles

Machines without the Center Boom Extension Kit

1. Remove the cable ties that secure the liquid and air tubes of the foam-marker kit to the outer boom section (Figure 25).

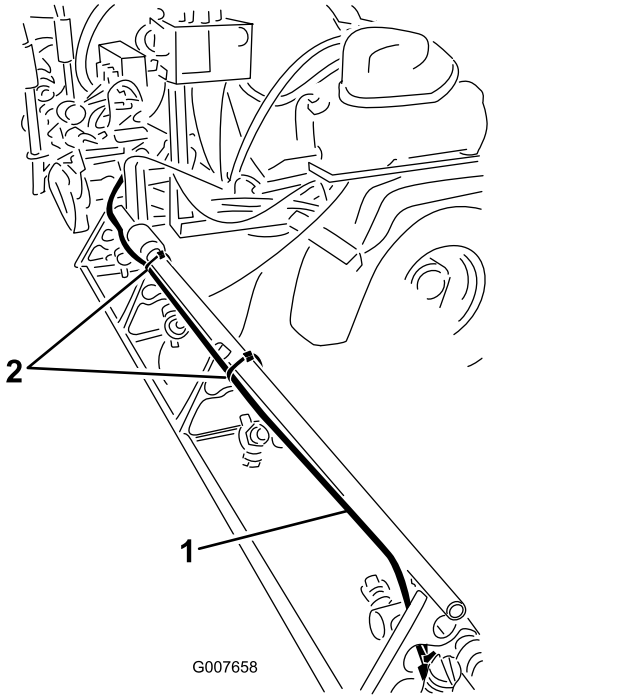

Figure 25

1. Liquid and air tubes (right boom section shown)
2. Cable ties

2. At the foam-marker nozzle, loosen the compression nut that secures the blue tube (water) to the blue compression fitting of the foam-marker nozzle (Figure 26).

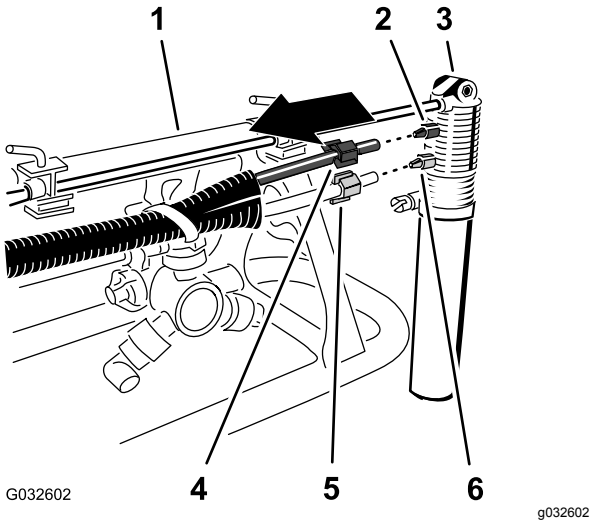

Figure 26

1. Outer boom section
2. Compression fitting (blue)
3. Foam-marker nozzle
4. Compression nut (blue—blue water tube)
5. Compression nut (white—clear air tube)
6. Compression fitting (white)

3. Loosen the compression nut that secures the clear tube (air) to the white compression fitting of the foam-marker nozzle (Figure 26).
4. Remove the liquid and air tubes from the machine.
5. Remove the compression nuts at the ends of the tubes (Figure 26).

   Note: Retain the compression nuts for installation in step 1 of Installing the New Tube Assembly (page 18).
6. Align the old liquid and air tubes (Figure 27) to the new tube assembly (Toro Part No. 114-9553).

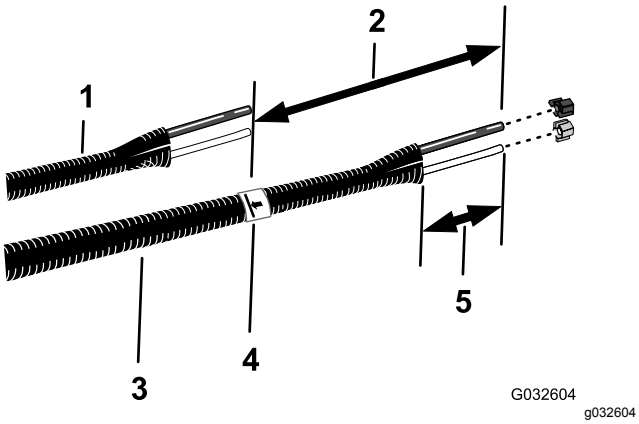

Figure 27

1. Old liquid and air tubes
2. 26 cm (10 inches)
3. New tube assembly (Toro Part No. 114-9553)
4. Tape and mark
5. 77 to 102 mm (3 to 4 inches)

7. Use a piece of tape to mark the length of the old liquid and air tubes onto the new tube assembly.
8. At the new tube assembly, add 26 cm (10 inches) length from the mark that you made in step 7, mark the tube assembly, and cut the tubes at the second (longer) mark (Figure 27).
9. If the old liquid and air tubes are marked with a cable tie, mark the new tube assembly with a cable tie; otherwise skip to step 10.

   Note: You no longer need the old liquid and air tubes.
10. Remove 77 to 102 mm (3 to 4 inches) of the sheathing from around each end of the tube assembly (Figure 27).
11. Repeat steps 1 through 10 for the liquid and air tubes at the other side of the machine.

Installing the New Tube Assembly

Machines without the Center Boom Extension Kit

1. Slip the blue compression nut over the ends of blue tube and the white compression nut over the clear tube (Figure 28).

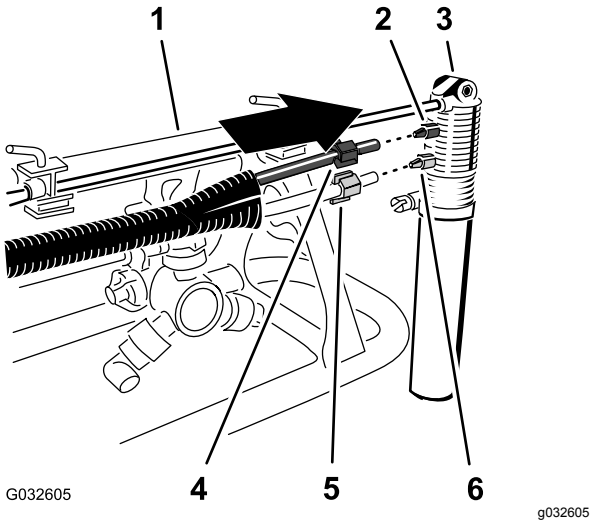

Figure 28

1. Outer boom section
2. Compression fitting (blue)
3. Foam-marker nozzle
4. Compression nut (blue—blue water tube)
5. Compression nut (white—clear air tube)
6. Compression fitting (white)

2. Align the end of the clear tube with the white compression nut to the white fitting of the foam-marker nozzle, and tighten the compression nut by hand (Figure 28).
3. Align the end of the blue tube with the blue compression nut to the blue fitting of the foam-marker nozzle, and tighten the compression nut by hand (Figure 28).
4. Route the tube assembly along the rear side of the upper support pole of the outer boom section as shown in Figure 29.

   Important: **If you install the tube assembly on the wrong side of the upper support pole, the tubes will be pinched between the cradle and the outer boom section when the booms are in the transport position.**

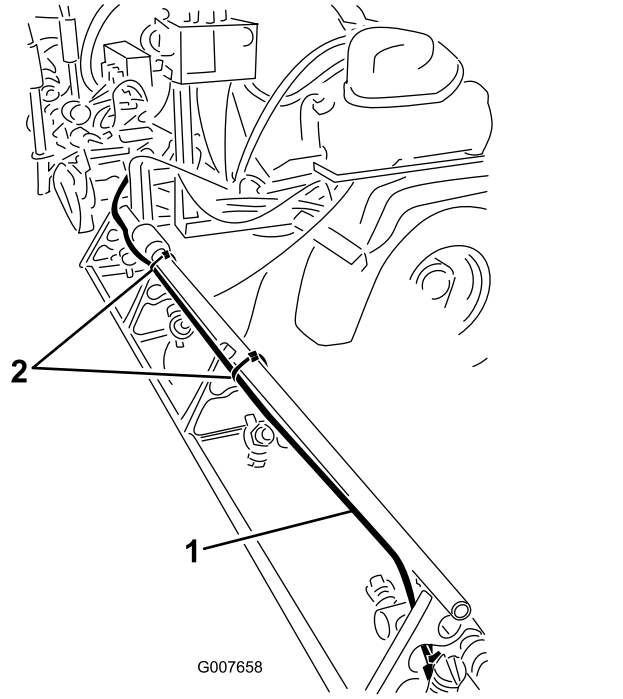

g007658

Figure 29

1. Tube assembly (right boom section shown)
2. Cable ties

5. Secure the tube assembly to the hole in the nozzle support with a cable tie as shown in Figure 30.

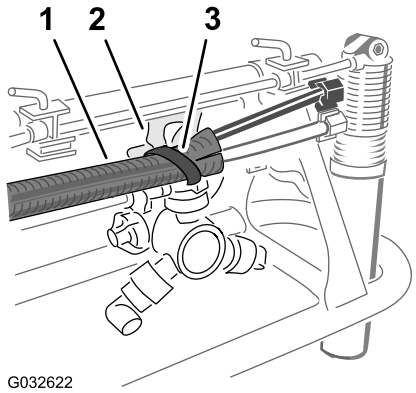

g032622

Figure 30

1. Tube assembly
2. Nozzle support
3. Cable tie

6. Secure the tube assembly to the outer boom section with cable ties as shown in Figure 29.
7. Loosely secure the free end of the tube assembly to the outer boom section.
8. Repeat steps 1 through 6 for the tube assembly at the other side of the machine.

7

Disconnecting the Optional Ultra Sonic Boom Kit

No Parts Required

Disconnecting the Wire Harness at the Lift-Cylinder Manifold

Optional Ultra Sonic Boom Kit

1. Disconnect the 2-pin connector of the sonic boom wire harness from the 2-pin connector of the right cylinder-enable solenoid of the lift-cylinder manifold (Figure 31).

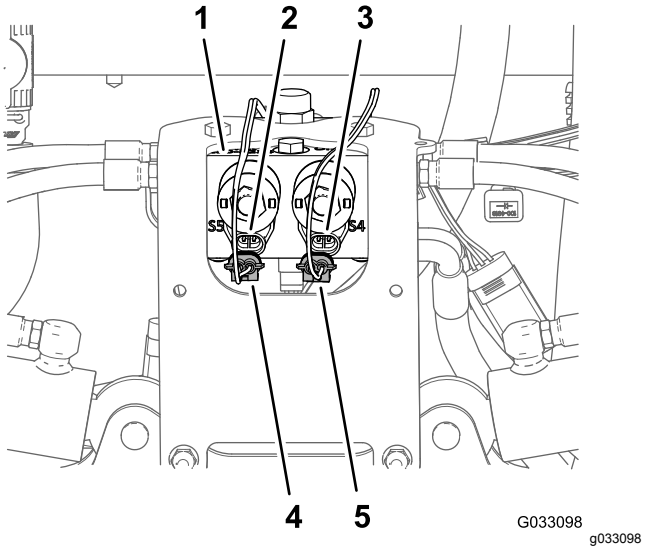

g033098

Figure 31

1. Lift-cylinder manifold
2. 2-pin connector (lift-cylinder manifold—left cylinder enable)
3. 2-pin connector (lift-cylinder manifold—right cylinder enable)
4. 2-socket connector (sonic boom wire harness—left cylinder enable)
5. 2-socket connector (sonic boom wire harness—right cylinder enable)

2. Disconnect the 2-pin connector of the sonic boom wire harness from the 2-pin connector of the left cylinder-enable solenoid of the lift-cylinder manifold (Figure 31).
3. Disconnect the 2-socket connectors of the wire harness for the sonic boom finishing kit (Figure 32) from the 2-pin connectors of the solenoids of the lift-cylinder manifold as follows:

Important: **Do not remove the sonic boom wire harness from the machine.**

- Left boom section up
- Right boom section up
- Left boom section down
- Right boom section down

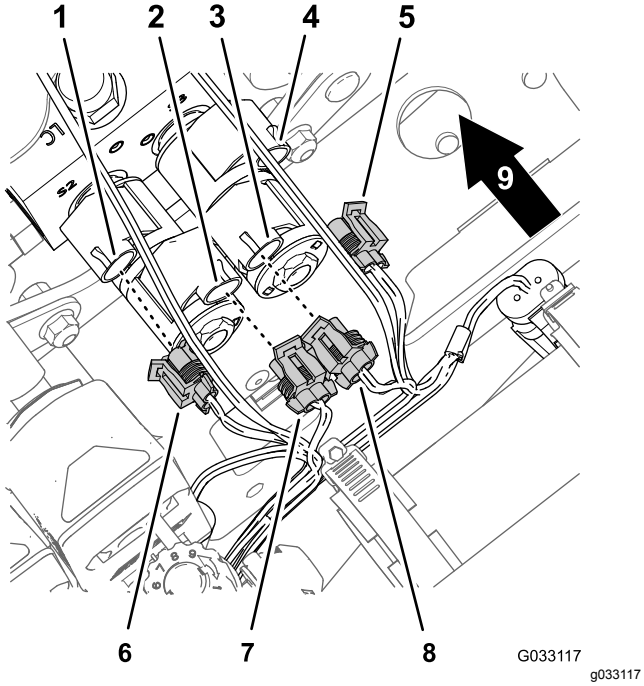

Figure 32

1. 2-pin connector (lift-cylinder manifold—left boom section down)
2. 2-pin connector (lift-cylinder manifold—left boom section up)
3. 2-pin connector (lift-cylinder manifold—right boom section up)
4. 2-pin connector (lift-cylinder manifold—right boom section down)
5. 2-socket connector (wire harness for the sonic boom finishing kit—right boom section down)
6. 2-socket connector (wire harness for the sonic boom finishing kit—left boom section down)
7. 2-socket connector (wire harness for the sonic boom finishing kit—left boom section up)
8. 2-socket connector (wire harness for the sonic boom finishing kit—right boom section up)
9. Back of the machine

Disconnecting the Ultra-Sonic Sensor Cable from the Wire Harness

1. Disconnect the 3-socket connector of the sonic boom wire harness from the 3-pin connector of the cable for the right ultra-sonic sensor (Figure 33).

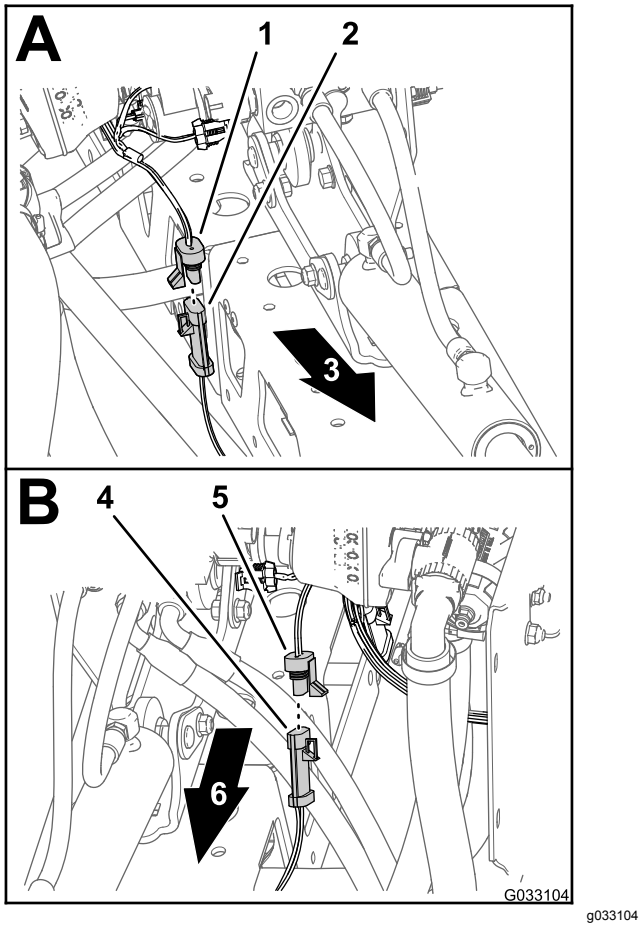

Figure 33

1. 3-socket connector (sonic boom wire harness—right sensor)
2. 3-pin connector (cable—right ultra-sonic sensor)
3. Right side of the machine
4. 3-pin connector (cable—left ultra-sonic sensor)
5. 3-socket connector (sonic boom wire harness—left sensor)
6. Left side of the machine

2. Disconnect the 3-socket connector of the sonic boom wire harness from the 3-pin connector of the cable for the left ultra-sonic sensor (Figure 33).
3. Bundle the cables for the ultra-sonic sensors to the left and right boom sections.

   Note: Do not remove the sonic boom wire harness from the machine.

8

Disconnecting the Optional Chemical Pre-Mix Kit

No Parts Required

Procedure

1. Remove the retainer that secures the straight-barbed fitting of the pressure-relief hose to the pressure relief valve for the sprayer system (Figure 34).

   Note: Retain the retainers for installation in step 2 of Installing the Pressure Relief-Hose Assembly (page 101).

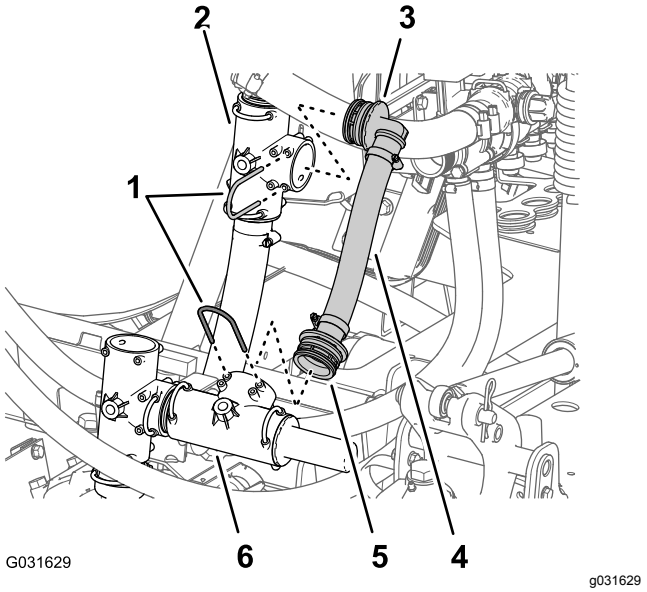

Figure 34

1. Retainers
2. T-fitting (supply circuit—sprayer pump)
3. 90° barbed fitting
4. Pressure-relief hose
5. Straight-barbed fitting
6. Pressure-relief valve

2. Remove the retainer that secures the 90° barbed fitting of the pressure-relief hose to the T-fitting for the supply circuit of the sprayer pump (Figure 34).

   Note: Retain the retainer for installation in step 4 of Installing the Pressure Relief-Hose Assembly (page 101); you no longer need the 90° fitting, pressure-relief hose, and straight flange fitting that you removed from the machine.

3. Remove the pressure-relief hose and fittings from the machine (Figure 34).

   Note: You no longer need the hose and fittings that you removed from the machine.

4. Remove the retainer that secures the straight-barbed fitting of the bypass hose to the T-fitting at the sprayer pump (Figure 35).

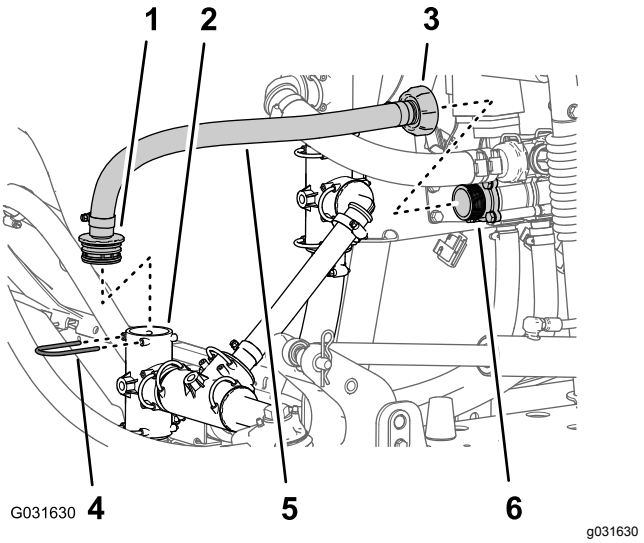

Figure 35

1. Straight-barbed fitting
2. T-fitting (sprayer pump)
3. Adapter nut
4. Retainer
5. Bypass hose
6. Adapter fitting (bypass valve)

5. Loosen the adapter nut at the inboard end of the bypass hose from the adapter fitting of the bypass valve (Figure 35).

6. Remove the hose from the machine (Figure 35).

   Note: Retain the retainer for installation in Connecting the Eductor-Supply Hose (page 102); you no longer need the hose and fitting that you removed from the machine.

7. Remove the hose clamp that secures the eductor-supply hose to the barbed fitting of the eductor-control valve (Figure 36).

   Note: Retain the hose clamp for installation of the eductor-supply hose in step 2 of Connecting the Eductor-Supply Hose (page 102).

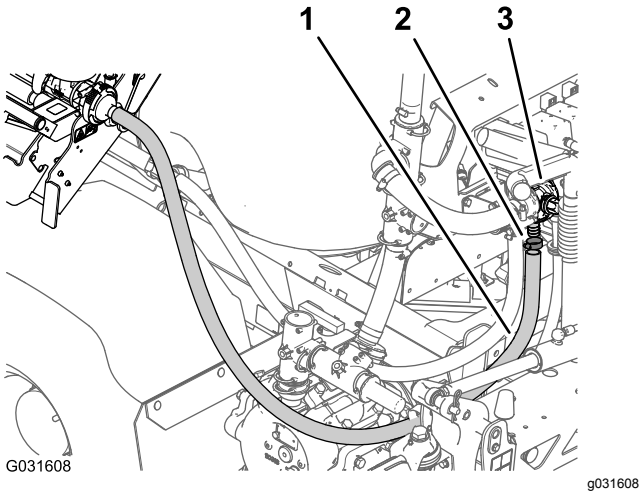

Figure 36

1. Hose (eductor supply)
2. Hose clamp
3. Eductor-control valve

8. Remove the hose from the eductor-control valve (Figure 36).

   Note: Do not remove the eductor-supply hose from the barbed fitting at the eductor.

9

Disconnecting the Optional EU Compliance Kit

No Parts Required

Procedure

1. Empty the rinse tank; refer to 5A and 5B in Preparing the Sprayer Tank and Optional Rinse Tank (page 6).
2. Disconnect the rinse 2 tank straps; refer to step 5C in Preparing the Sprayer Tank and Optional Rinse Tank (page 6).
3. Remove the 2 flange-head bolts (5/16 x 5/8 inch) that secure the ball valve to the mounting bracket for the ball valve (Figure 37).

   Note: Retain the bolts for installation in step 5 of Installing the Ball Valve and Mounting Bracket (page 103).

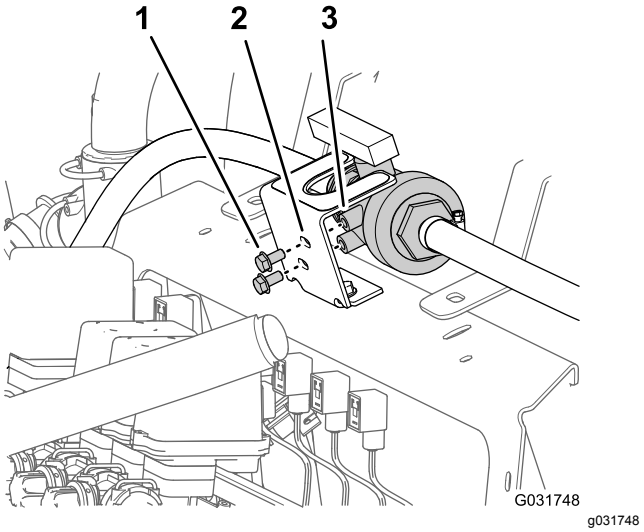

Figure 37

1. Flange-head bolt (5/16 x 5/8 inch)
2. Mounting bracket (ball valve)
3. Threaded boss (ball valve)

4. Remove the 2 flange-head bolts (5/16 x 3/4 inch), and 2 flange locknuts (3/8 inch) that secure the mounting bracket for the ball valve to the manifold mount, and separate the bracket from the mount (Figure 38).

   Note: Retain the bolts and nuts for installation in step 2 of Installing the Ball Valve and Mounting Bracket (page 103).

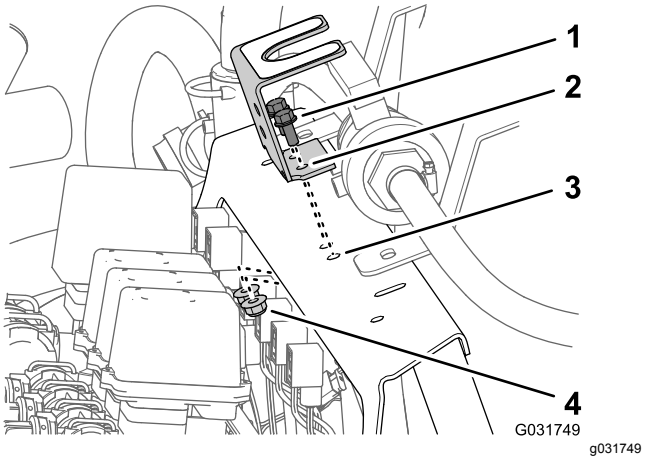

Figure 38

1. Flange-head bolts (5/16 x 3/4 inch)
2. Mounting bracket (ball valve)
3. Manifold mount
4. Flange locknut (5/16 inch)

10

Removing the Center Section Cover (11 Nozzle) of the Optional Covered Boom Kit

No Parts Required

Procedure

1. While supporting the center section cover (11 nozzle), remove the 4 flange-head bolts (5/16 x 1-1/4 inches) and 2 cover straps that secure the cover to the cover-support bracket (Figure 39).

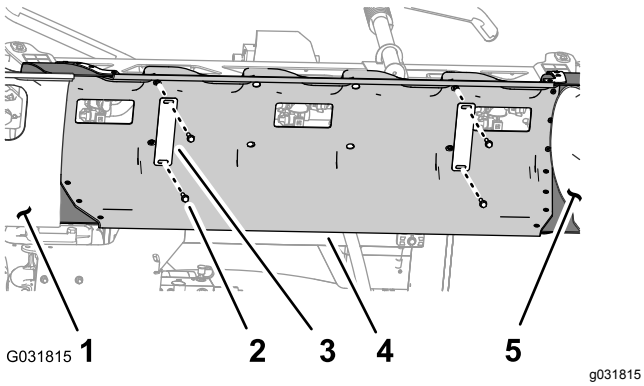

Figure 39

1. Boom-section cover (left)
2. Flange-head bolt (5/16 x 1-1/4 inches)
3. Cover strap
4. Center section cover
5. Boom-section cover (right)

2. Remove the center section cover from the machine (Figure 40).

   Note: Retain the cover for assembly in 38 Assembling the Optional Covered Boom Kit (page 104); retain the cover straps and flange-head bolts for installation in steps 2 and 1 of Installing the Center Section Cover (page 106).

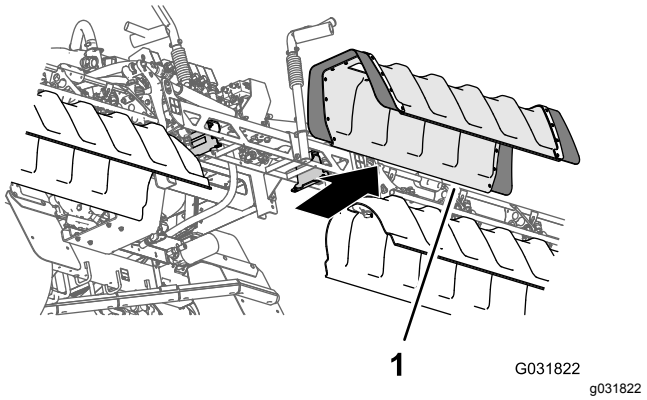

Figure 40

1. Center section cover

3. Remove the 2 flange locknuts (3/8 inch) that secure the left cover-support bracket to the left support bracket for the center boom section, and remove the cover-support bracket (Figure 41).

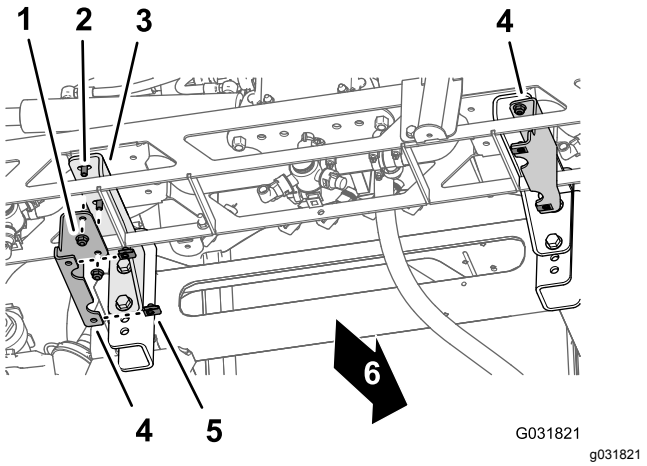

Figure 41

1. Flange locknut (3/8 inch)
2. Flange-head bolt (3/8 x 1 inch)
3. Left support bracket
4. Cover-support bracket
5. Clip nut
6. Front of the machine

4. Thread the 2 flange locknuts (3/8 inch) on to the flange-head bolts (3/8 x 1 inch) of the left support bracket for the center boom section (Figure 41) and torque the bolt and nut to 37 to 45 N·m (27 to 33 ft-lb).
5. Repeat steps 3 and 4 for the cover-support bracket and support bracket for the center boom section at the right side of the center boom section (Figure 41).
6. Remove the clip nuts from the left and right cover-support brackets (Figure 41).

   Note: Retain the clip nuts for installation in step 1 of Installing the Support Bracket for the Center Section Cover (page 105); you no longer need the 2 cover-support brackets.

11

Disconnecting the Pressure-Sense Tube for the Dash Gauge (for Machines without an Optional Hose Reel Kit)

No Parts Required

Procedure

Note: If your machine is equipped with an optional Hand Spray-Wand Kit, optional Electric Hose-Reel kit, or optional Pivoting Hose-Reel Kit, refer to 4 Disconnecting the Optional Hand Spray Wand Kit or Electric Hose Reel Kit (page 11) or 5 Disconnecting the Optional Pivoting Hose Reel Kit (page 14).

1. Press down the collar of the tube coupler in the pressure port at the right side of the right boom-section valve (Figure 42).

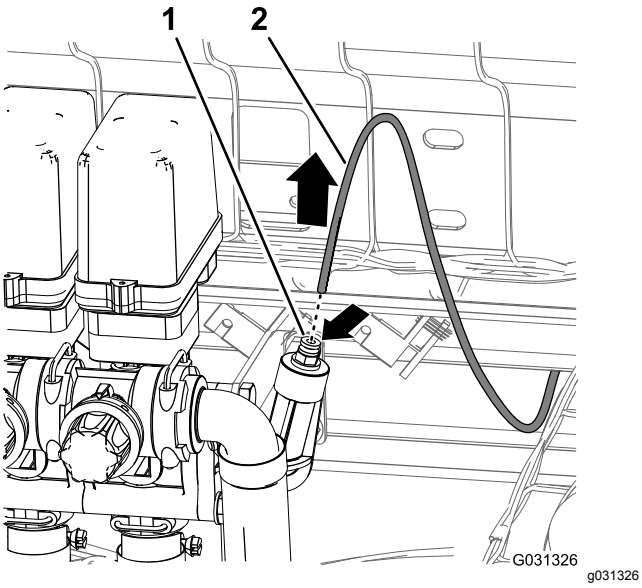

Figure 42

1. Locking collar (tube coupler)
2. Pressure-sense tube (dash-pressure gauge)

2. Pull the pressure-sense tube for the dash gauge out of the tube coupler (Figure 42).

12

Removing the Optional Undercarriage Shroud Kit

No Parts Required

Procedure

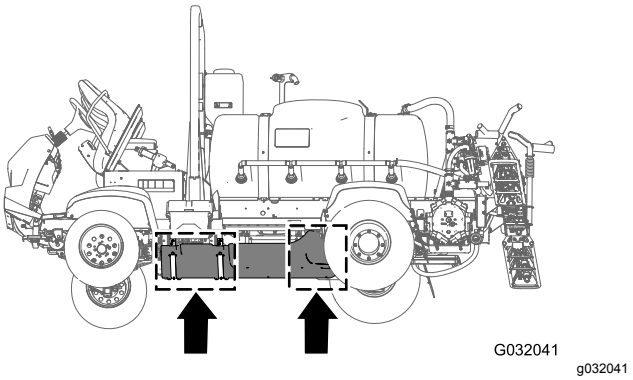

Figure 43

1. Remove the 7 flange-head bolts (5/16 x 7/8 inch) and 7 washers (5/16 inch) that secure the rear of the undercarriage shroud to the chassis of the machine (Figure 44).

   Note: Retain the flange-head bolts and washers for installation in step 5 of 33 Installing the Optional Undercarriage Shroud Kit (page 81).

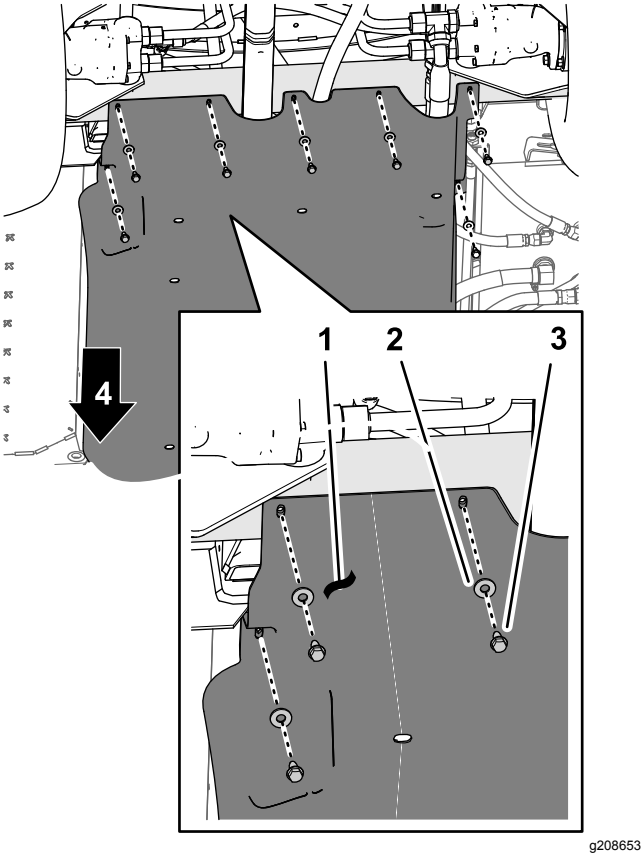

Figure 44

1. Undercarriage shroud
2. Washers (5/16 inch)
3. Flange-head bolts (5/16 x 7/8 inch)
4. Front of the machine

2. Remove the 4 flange locknuts (5/16 inch) from the bolts and carriage bolt that secure the support straps of the undercarriage shroud to the engine-mount brackets of the machine (Figure 45).

   Note: Do not remove the bolts from the machine. Retain the flange locknuts for installation in step 3 of 33 Installing the Optional Undercarriage Shroud Kit (page 81).

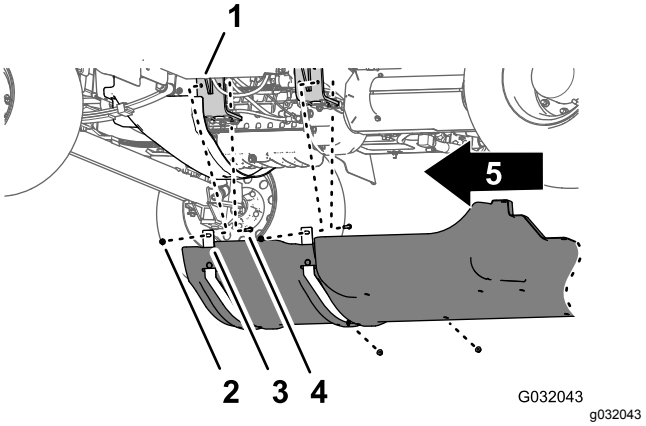

Figure 45

1. Engine mount
2. Bolt—shown for clarity; do not remove
3. Support straps (undercarriage shroud)
4. Flange locknuts (5/16 inch)
5. Front of the machine

3. Lift the support straps over the bolts that secure the undercarriage shroud to the engine-mount brackets.
4. Remove the undercarriage shroud from the machine (Figure 44 and Figure 45).

13

Removing the Rear Wire Harness for the Machine

Parts needed for this procedure:

1	Rear wire harness

Disconnecting the Front and Rear Wire Harnesses

Note: Use a machine hoist when disconnecting the front and rear wire harnesses.

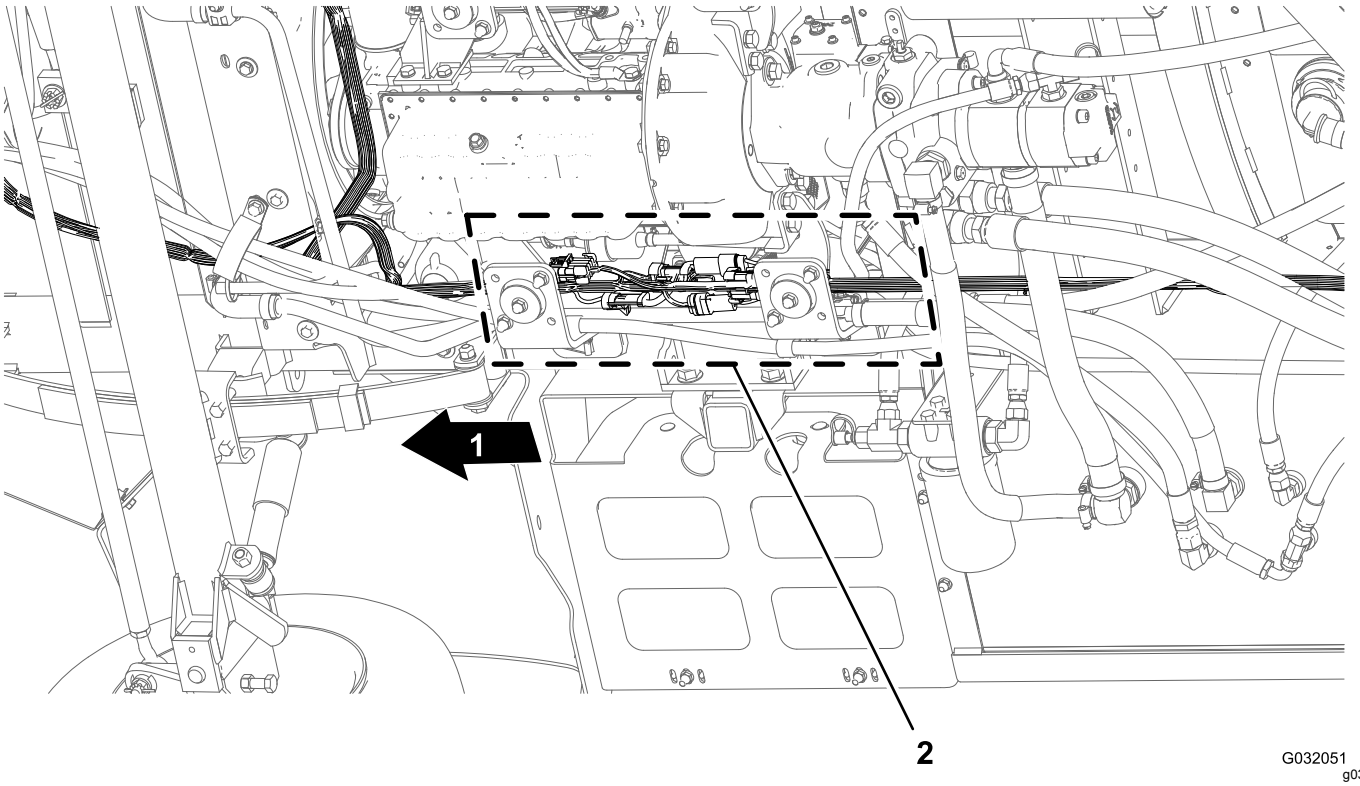

Figure 46

1. Front of the machine
2. Connector interfaces (front and rear wire harnesses)

1. From under the machine along the right frame tube, locate the electrical connectors for the front and rear wire harnesses of the machine (Figure 46).
2. Disconnect the 5 pairs of connectors between the front and rear wire harnesses as shown in Figure 47 through Figure 51.

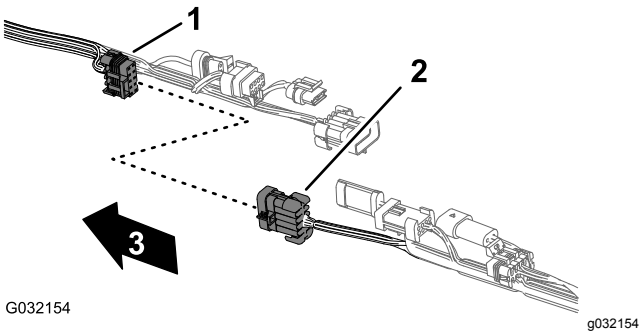

Figure 47

1. 10-socket connector—sprayer-harness interconnect (front harness)
2. 10-pin connector—sprayer-harness interconnect (rear harness)
3. Front of the machine (front harness)

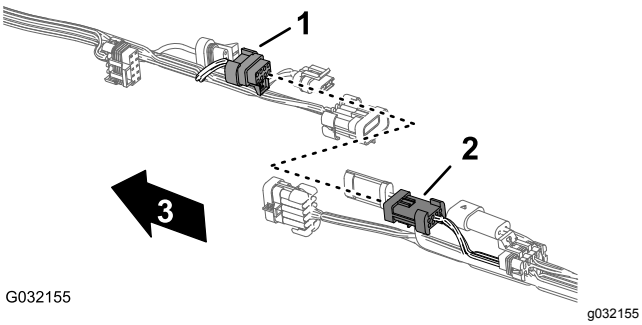

Figure 48

1. 8-socket connector—sprayer-harness interconnect (front harness)
2. 8-pin connector—sprayer-harness interconnect (rear harness)
3. Front of the machine (front harness)

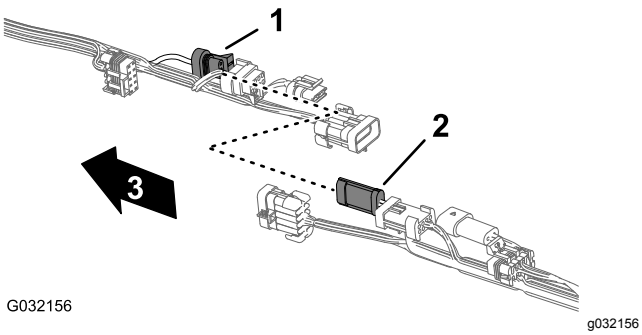

Figure 49

1. 3-socket connector—flow meter (front harness)
2. 3-pin connector—flow meter (rear harness)
3. Front of the machine (front harness)

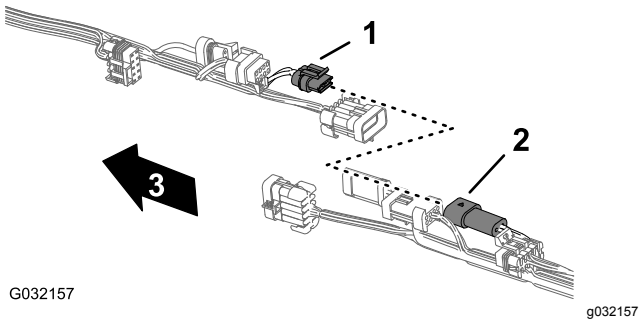

Figure 50

1. 2-socket connector—rinse pump (front harness)
2. 2-pin connector—rinse pump (rear harness)
3. Front of the machine (front harness)

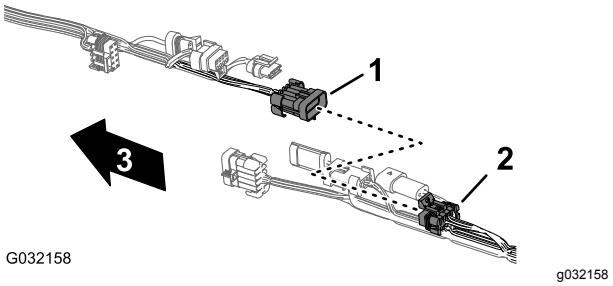

Figure 51

1. 10-pin connector—sprayer-harness interconnect (front harness)
2. 10-socket connector—sprayer-harness interconnect (rear harness)
3. Front of the machine (front harness)

3. Remove the 3 push-in fasteners that secure the rear wire harness to the holes in the right frame tube of the machine (Figure 52).

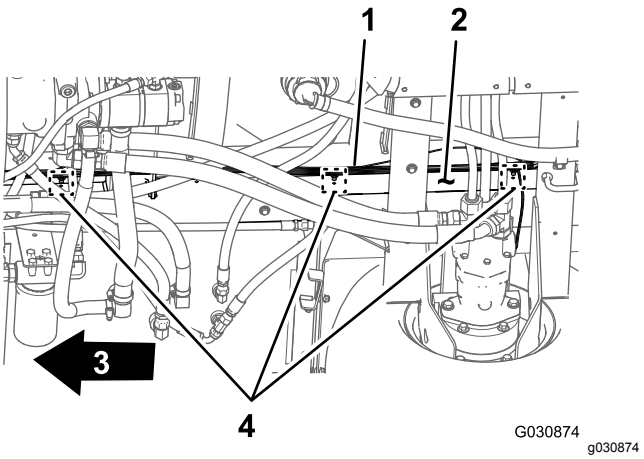

Figure 52

1. Rear wire harness
2. Right frame tube
3. Front of the machine
4. push-in fasteners

4. Remove the pressure-sense tube for the dash gauge from the rear wire harness of the machine (Figure 53).

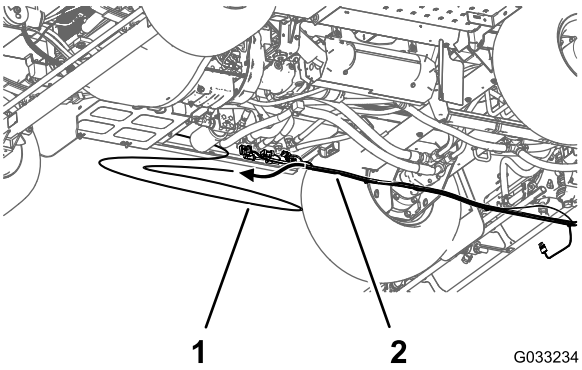

Figure 53

1. Pressure-sense tube (dash gauge)
2. Rear wire harness

Disconnecting the Connectors of the Components

1. At back of the machine (between the right frame tube and the right fender) disconnect the 3-pin connector of the speed-sensor harness at the right hydraulic-traction motor from the 3-socket connector of the rear, main harness (Figure 54).

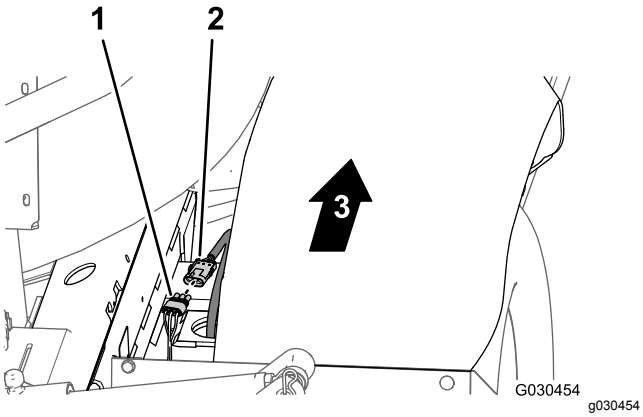

Figure 54

1. 3-socket connector (rear, main harness)
2. 3-pin connector (hydraulic motor harness)
3. Front of the machine

2. At the back of the manifold mount, disconnect the 3-socket connector from the agitation valve and the 3-socket connectors from the 3 boom-section valves (Figure 55).

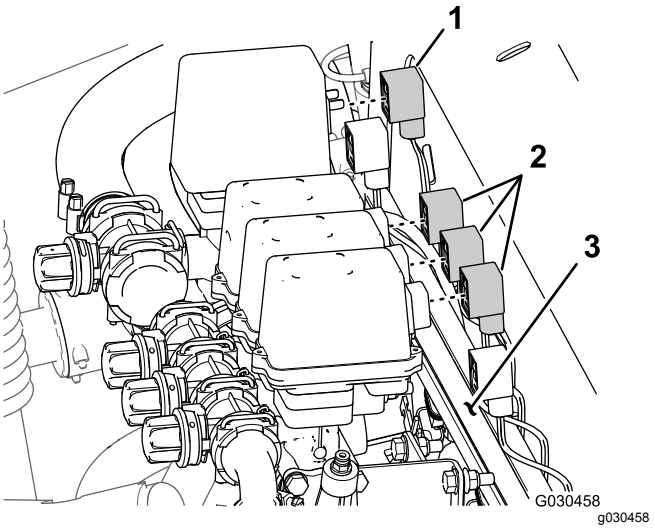

Figure 55

1. 3-socket connector (agitation valve)
2. 3-socket connectors (boom-section valves)
3. Manifold mount

3. Remove the push-in fastener that secures the rear wire harness to the holes at the forward side of the manifold mount (Figure 56).

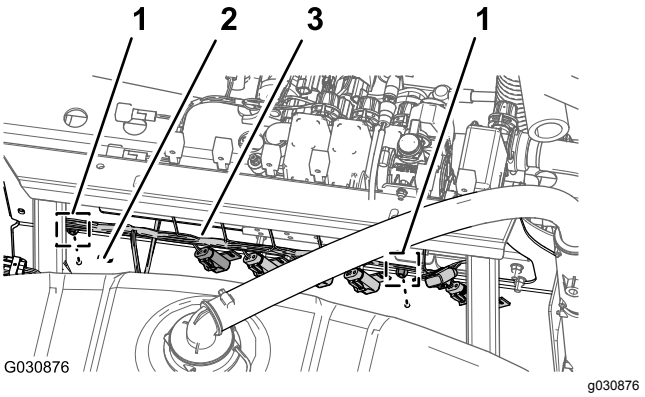

Figure 56

1. push-in fastener
2. Manifold mount (forward side)
3. Rear wire harness

4. At the back of the machine, disconnect the following 2-socket connectors (Figure 57) for the lift-cylinder manifold as follows:

   Note: For machines to the ultra sonic boom kit; refer to Disconnecting the Wire Harness at the Lift-Cylinder Manifold (page 19).

   - Right—up solenoid
   - Left—up solenoid
   - Enable solenoid
   - Right—down solenoid
   - Left—down solenoid

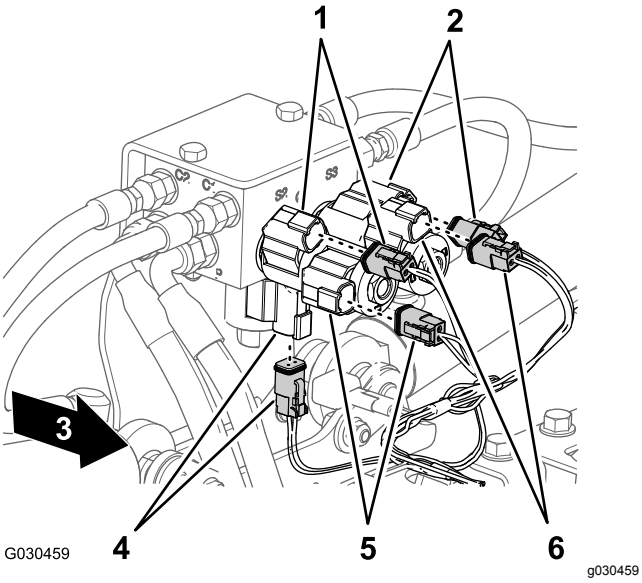

Figure 57

1. Right—up (solenoid and main-harness connector)
2. Left—up (solenoid and main-harness connector)
3. Front of the machine
4. Enable (solenoid and main-harness connector)
5. Right—down (solenoid and main-harness connector)
6. Left—down (solenoid and main-harness connector)

5. At the back of the machine (inboard of the sprayer pump), disconnect the 2-socket connector of the rear, main harness from the 2-pin connector of the relay for the pump (Figure 58).

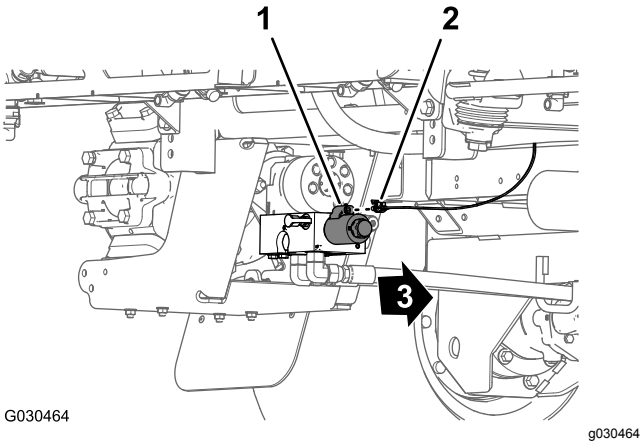

Figure 58

1. 2-pin connector (pump relay)
2. 2-socket connector (rear, main harness)
3. Front of the machine

6. Remove the push-in fastener that secure the rear wire harness (Figure 59) to the holes in the rear cross tube (rearward of the hydraulic-traction motors).

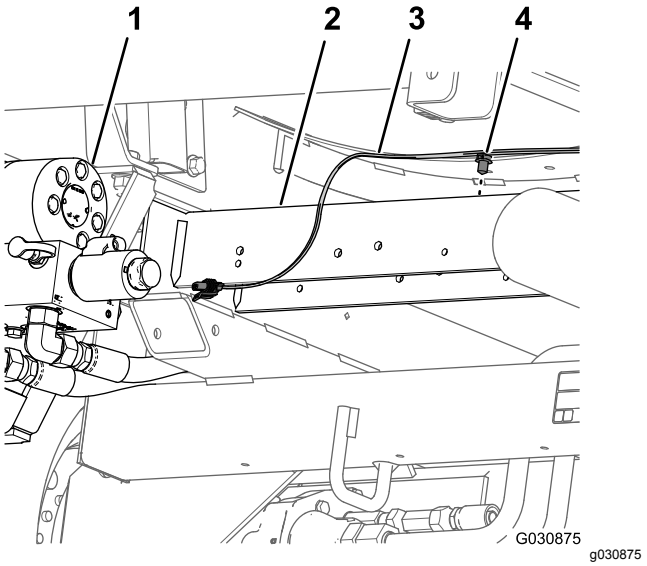

Figure 59

1. Sprayer pump
2. Rear cross tube
3. Rear wire harness
4. push-in fastener

7. Remove the rear wire harness from the machine.

   Note: You no longer need the rear, main harness that you removed from the machine.

14

Removing the Rate-Control Switch

Parts needed for this procedure:

1	Cable tie
1	Switch plug

Procedure

1. From under the dash panel of the machine, squeeze the lock tabs of the rate-control switch together and push up the rate-control switch out of the dash panel (Figure 60).

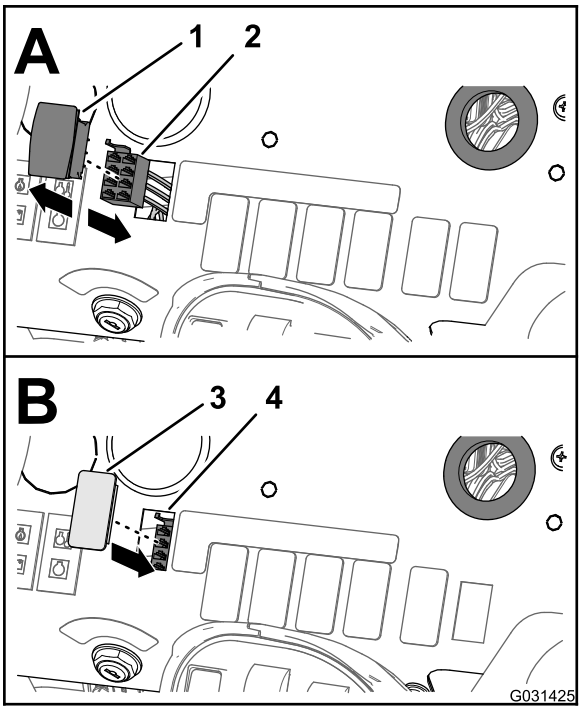

Figure 60

1. Rate-control switch
2. 8-socket connector (front harness)
3. Switch plug
4. Opening (dash panel)

2. Disconnect the 8-socket connector of the front harness of the machine (labeled RATE SWITCH) from the 8-pin connector of the switch (Figure 60).

   Note: You no longer need the rate switch that you removed from the machine.

3. Route the branch of the front harness for the rate switch through the opening in the dash and secure the wiring branch against the front harness with a cable tie.
4. Align the switch plug to the opening in the dash panel where you removed the rate switch (Figure 60).
5. Insert the switch plug into the dash panel until the plug snaps into the panel securely (Figure 60).

15

Removing the Boom-Section Valves and the Agitation Valve

No Parts Required

Removing the Boom-Section Valves and Hoses

1. At the forward side of the sprayer boom section, remove the R-clamp, shoulder bolt (5/16 inch), washer (5/16 inch), and flange locknut (5/16 inch) that secure the boom hose to the center section frame (Figure 61).

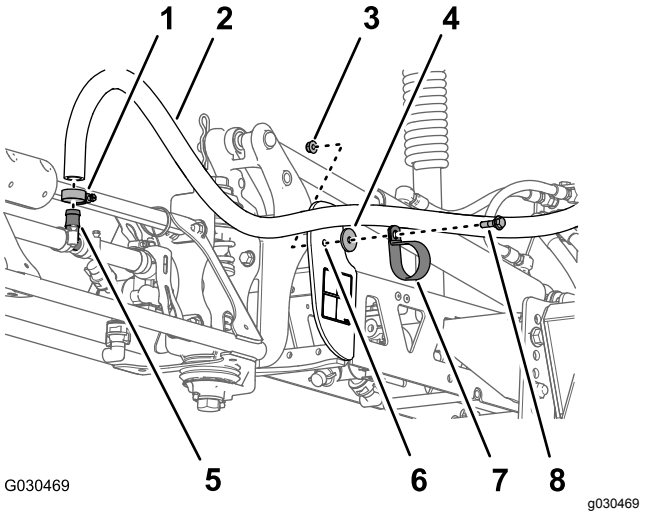

Figure 61

1. Hose clamp
2. Boom hose
3. Flange locknut (5/16)
4. Washer (5/16)
5. Barbed T-fitting
6. Center section frame
7. R-clamp
8. Shoulder bolt (5/16)

2. Remove the hose clamp and boom hose from the barbed T-fitting (Figure 61).
3. Repeat steps 1 and 2 for the clamp and hose of the sprayer boom section at the other side of the machine.
4. Adjacent to the center sprayer nozzle, remove the hose clamp and boom hose from the barbed T-fitting (Figure 62).

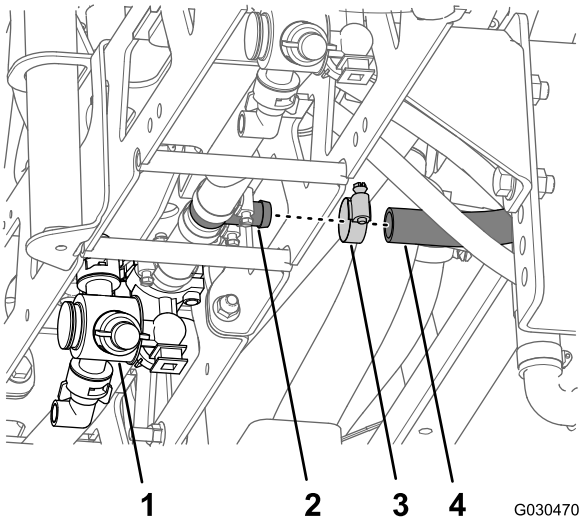

Figure 62

1. Center sprayer nozzle
2. Barbed T-fitting
3. Hose clamp
4. Boom hose

5. Remove the 4 flange-head bolts (5/16 x 1 inch) and 4 flange locknut (5/16 inch) that secure the mounting brackets at either end of the 3 boom-section valves to the manifold mount (Figure 63).

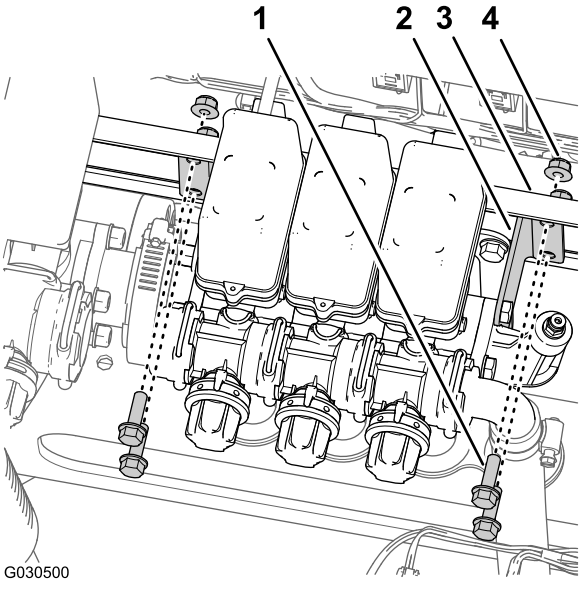

Figure 63

1. Flange-head bolt (5/16 x 1 inch)
2. Mounting bracket
3. Manifold mount
4. Flange locknut (5/16)

6. Remove the hose clamp that secures the hose (1 inch inside diameter) to the barbed-elbow fitting and remove the hose from the fitting (Figure 64).

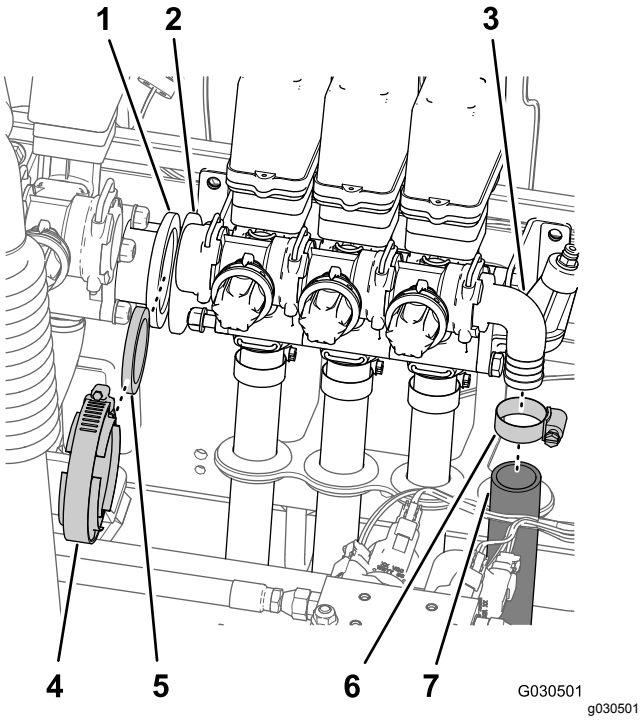

Figure 64

1. Flange adapter (agitation valve)
2. Flange adapter (boom-section valve)
3. Barbed-elbow fitting
4. Flange clamp
5. Gasket
6. Hose clamp
7. Hose (1 inch inside diameter)

7. Remove the flange clamp and gasket that secure the flange adapter on the agitation valve and the flange adapter on the left boom-section valve (Figure 64).
8. With the 3 boom hose attached to the 3 boom-section valves, carefully lift the valves from the hose loom and remove the valves and hoses from the machine (Figure 65).

   Note: If needed, lubricate the hoses with mineral oil as you pull the hoses through the rubber grommets in the loom.

   Note: You no longer need the clamps, bolts, locknuts, spacers valves, and hoses that you removed from the machine.

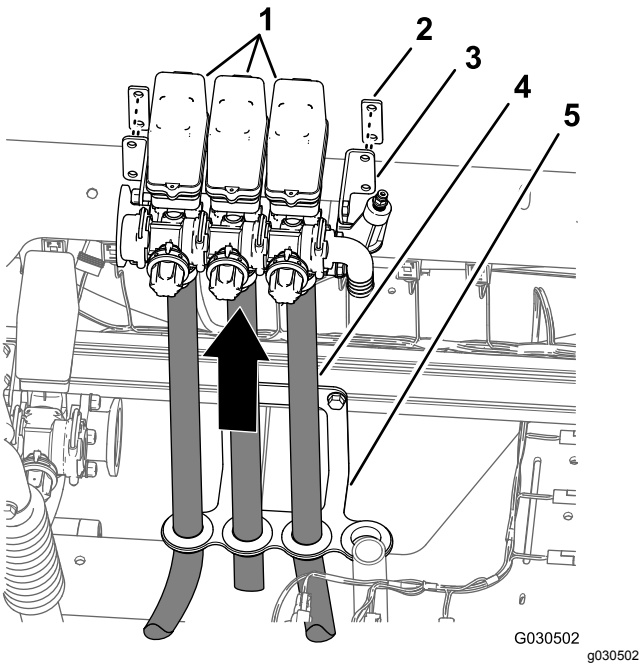

Figure 65

1. Boom-section valves
2. Spacer
3. Mounting bracket
4. Boom hose
5. Hose loom

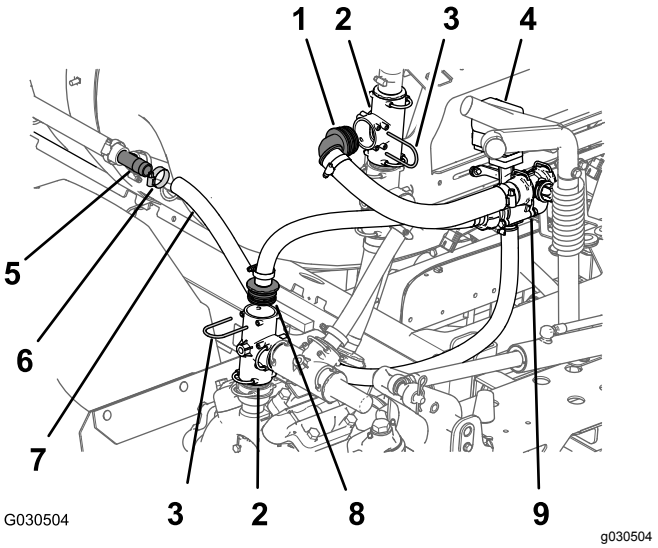

Figure 66

1. 90° hub fitting
2. T-fitting
3. Retainer
4. Agitation valve
5. Barbed T-fitting
6. Hose camp
7. Hose (1 inch inside diameter)
8. Straight-hub fitting
9. Bypass valve

Removing the Agitation Valve, Ball Valve, and Hoses

⚠ DANGER

Residual sprayer chemicals contained in the hoses and components can injure your eyes and skin.

- **Wear safety glasses or goggles and chemical resistant gloves when disassembling the sprayer system.**
- **Carefully disconnect hoses and components when the machine is raised on lifting equipment or you are under the machine.**

1. Ensure that the sprayer system is drained through the drain valve.
2. At the left side of the sprayer tank (adjacent to the rear fender), remove the hose clamp and hose (1 inch inside diameter) at the barbed T-fitting of the rear most agitation nozzle (Figure 66).

   Note: Retain the hose clamp for installation in step 2 of Installing the Supply Hose for the Agitator Nozzles (page 47).
3. At the outlet port for the sprayer pump, remove the retainer and straight-hub fitting from the vertically mounted T-fitting as shown in Figure 66.

   Note: Retain the retainers that you removed from the T-fitting for installation in Installing the Supply Hose and Bypass Hose (page 47).
4. At the left side of the manifold bracket, remove the retainer and 90° hub fitting from the upper, vertically mounted T-fitting as shown in Figure 66.

   Note: Retain the retainers that you removed from the T-fitting for installation in Installing the Supply Hose and Bypass Hose (page 47).
5. At the top of the sprayer pump, remove the 2 flange-head bolt (5/16 x 3/4 inch) that secure the ball valve to the valve bracket (Figure 67).

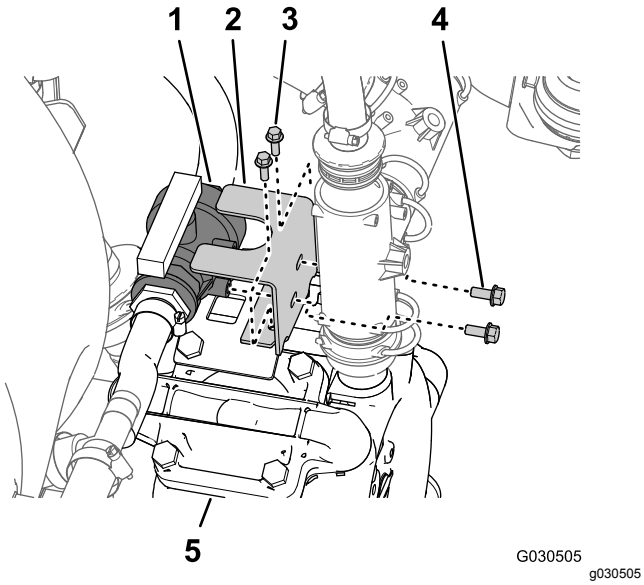

Figure 67

1. Ball valve
2. Valve bracket
3. Flange-head bolt (1/4 x 3/4 inch)
4. Flange-head bolt (5/16 x 3/4 inch)
5. Sprayer pump

6. Remove the 2 flange-head bolt (1/4 x 3/4 inch) that secure the valve bracket to the mounting bracket on top of the pump (Figure 67).
7. Remove the 2 flanged locknuts (5/16 inch) and 2 flange-head bolts (5/16 x 1 inch) that secure the support bracket for the agitation valve to the manifold mount (Figure 68).

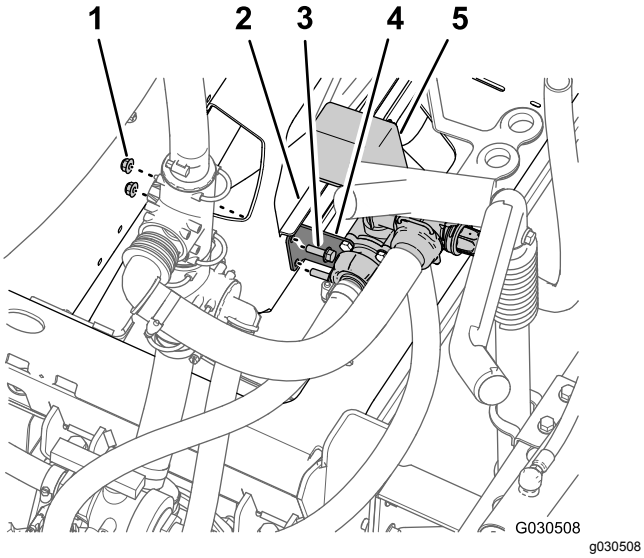

Figure 68

1. Flanged locknuts (5/16 inch)
2. Manifold bracket
3. Flange-head bolts (5/16 x 1 inch)
4. Support bracket (agitation valve)
5. Agitation valve

8. Remove the agitation valve (and bypass valve), ball valve, and the hoses that are attached to the valves from the machine (Figure 69).

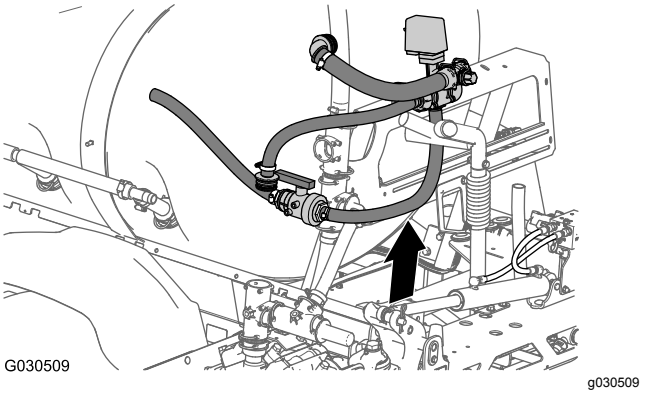

Figure 69

Disassembling the Agitation and Bypass Valves

1. Remove the hose clamps that secure the hose between the ball valve and the bottom of the agitation valve (Figure 70).

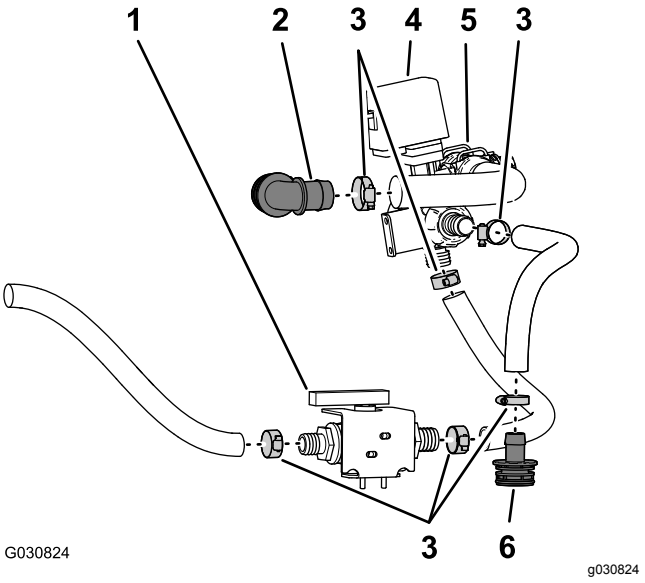

Figure 70

1. Ball valve
2. 90° barbed fitting
3. Hose clamps
4. Agitation valve
5. Bypass valve
6. Straight-barbed fitting

2. Remove the hose clamp that secures the hose to the other end of the ball valve (Figure 70).
3. Remove the hose clamp that secures the 90° barbed fitting to the hose from the bypass valve (Figure 70).

   Note: Do not separate the barbed fitting from the hose.

4. Remove the hose clamps that secure the hose between straight-barbed fitting and the agitation valve (Figure 70).

   Note: Do not separate the barbed fitting from the hose.

   Note: Retain the hose clamps for installation in Installing the Supply Hose for the Agitator Nozzles (page 47) and Installing the Supply Hose and Bypass Hose (page 47).

   Note: You no longer need the agitation valve, ball valve, 90° barbed fitting, straight-barbed fitting, and hoses that you removed from the machine.

16

Removing the Boom Sections

Parts needed for this procedure:

1	Cable tie

Removing the Lift Cylinders

Note: Except where noted, retain all hardware that you remove.

1. Use lifting equipment of the specified capacity to support the outer boom section.
2. At the back of the machine, remove the hydraulic hoses from between the boom-lift manifold and the hydraulic cylinder (Figure 71).

   Note: Protect the boom-lift manifold and the hydraulic cylinder from dust and debris by plugging extend and retract ports.

   Note: Discard the hydraulic hoses.

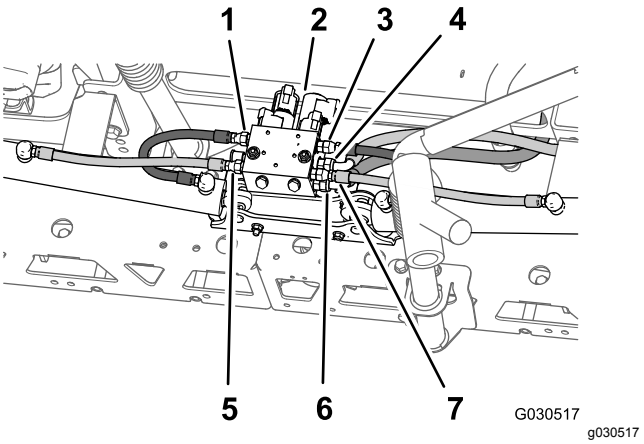

Figure 71

1. Left extend hose (port C3—boom-lift manifold)
2. Boom-lift manifold
3. Right extend hose (port C1—boom-lift manifold)
4. Hydraulic-pressure hose (port P—boom-lift manifold)
5. Left retract hose (port C4—boom-lift manifold)
6. Hydraulic-return hose (port T—boom-lift manifold)
7. Right retract hose (port C2—boom-lift manifold)

3. Remove the hairpin and clevis pin that secure the rod end of the lift cylinder to the pivot bracket (Figure 72).

   Note: Retain the clevis pin and hairpin for installation in Assembling the Outer Boom Sections to the Machine (page 61).

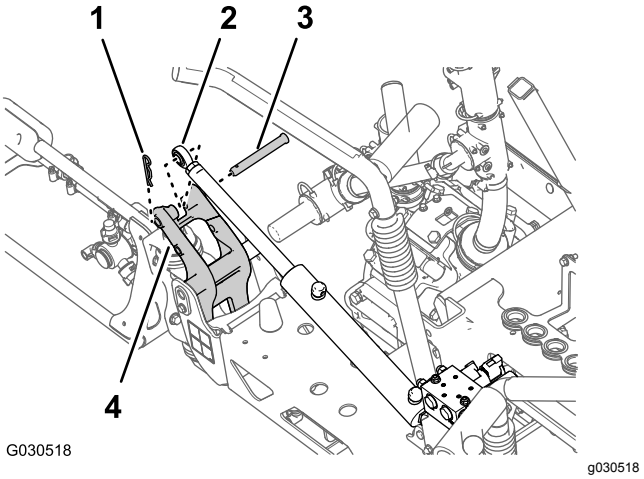

Figure 72

1. Hairpin
2. Rod fitting (lift cylinder)
3. Clevis pin
4. Pivot bracket

4. Remove the flange locknut (5/16 inch) and flange-head bolt (5/16 x 3/4 inch) that secures the pivot pin to the cylinder mount (Figure 73).

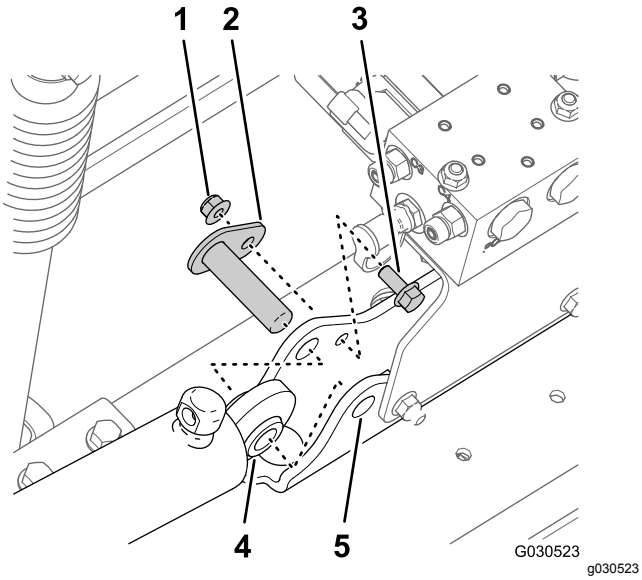

Figure 73

1. Flange locknut (5/16 inch)
2. Pivot pin
3. Flange-head bolt (5/16 x 3/4 inch)
4. Lift cylinder
5. Cylinder mount

5. Remove the pivot pin and the lift cylinder from the machine (Figure 73).
6. Repeat steps 3 and 4 for the lift cylinder at the other side of the machine.

Removing the Outer Boom Sections

Lift equipment capacity: 91 kg (200 lb)

Note: If your machine is equipped with the optional Covered-Boom Kit, leave the covers installed at the outer boom sections.

⚠ WARNING

Lifting heavy machines and attachments improperly could result in serious injury or even death.

When lifting heavy machines and attachments, use lifting equipment, such as chains and straps, that is rated for the weight of the equipment.

Note: Except where noted, retain all hardware that you remove; you will use the hardware to install the center boom extension.

1. Remove the flange bolt (5/16 x 1 inch) and flange locknut (5/16 inch) securing the pivot pin to the pivot bracket (Figure 74).

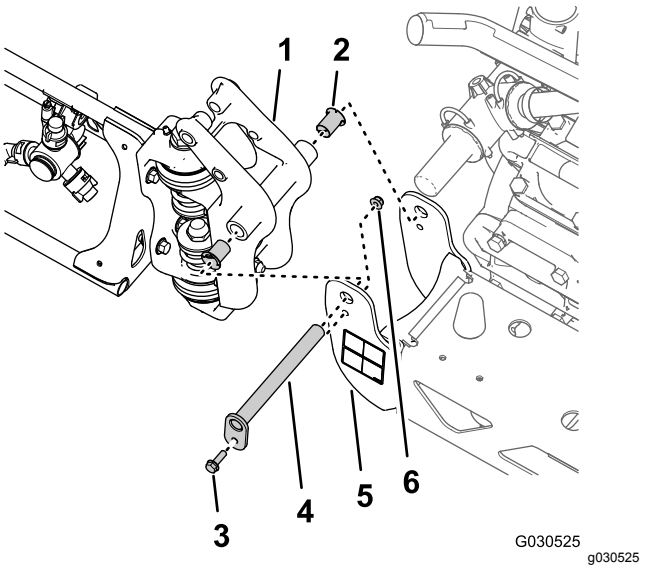

Figure 74

1. Pivot fitting (outer boom section)
2. Nylon-flange bushing
3. Flange bolt (5/16 x 1 inch)
4. Pivot pin
5. Pivot bracket (center boom section)
6. Flange locknut (5/16 inch)

2. Remove the pivot pin from the pivot bracket for the center boom section and the pivot fitting for the outer boom section (Figure 74).

   Note: Retain the flange bolt, flange nut and pivot pin for installation in Assembling the Outer Boom Sections to the Machine (page 61).
3. Separate the outer boom section from the center boom section and remove outer section from the machine (Figure 74).
4. Remove the 2 nylon-flange bushings from the pivot fitting of the outer boom section (Figure 74).

   Note: Discard the bushings.
5. Repeat steps 1 through 4 in Removing the Lift Cylinders (page 34) for the outer boom section at the other side of the machine.
6. Repeat steps 1 through 4 of this section for the outer boom section at the other side of the machine.

Removing the Lift Cylinder Manifold and Support Bracket

1. At port P of the boom-lift manifold, mark the pressure hydraulic hose with a cable tie (Figure 75).

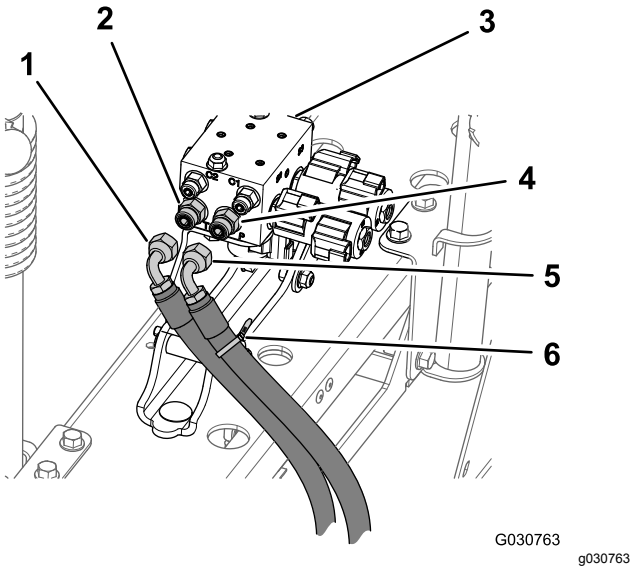

Figure 75

1. Hydraulic-return hose
2. Straight fitting (port T)
3. Boom-lift manifold
4. Straight fitting (port P)
5. Hydraulic-pressure hose
6. Cable tie

2. Disconnect hydraulic pressure and return hoses from the boom-lift manifold (Figure 75).

   Important: **Elevate the free ends of the hydraulic-return hose and hydraulic-pressure hose to avoid draining the hydraulic tank.**

3. Remove the 2 flange locknuts (5/16 inch) and 2 flange-head bolts (5/16 x 1 inch) that secure the support bracket for the boom-lift manifold to the cylinder mount, and remove the manifold and bracket from the machine (Figure 76).

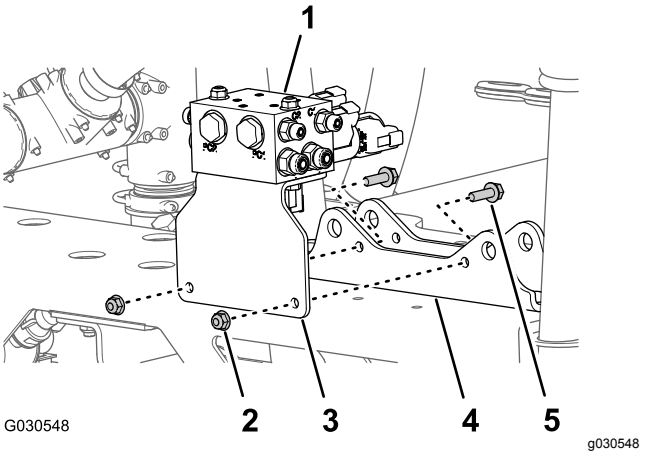

Figure 76

1. Boom-lift manifold
2. Flange locknuts (5/16 inch)
3. Support bracket (boom-lift manifold)
4. Cylinder mount
5. Flange-head bolts (5/16 x 1 inch)

Removing the Boom Cradle

1. At the left boom cradle, remove the flange-head bolt (3/8 x 2 inches) and flange locknut (3/8 inch) that secure the left upper cradle assembly to the lower cradle assembly (Figure 77).

   Note: Retain the upper cradle, bolt, and nut for installation in Assembling the Cradles to the Center Boom Section (page 55).

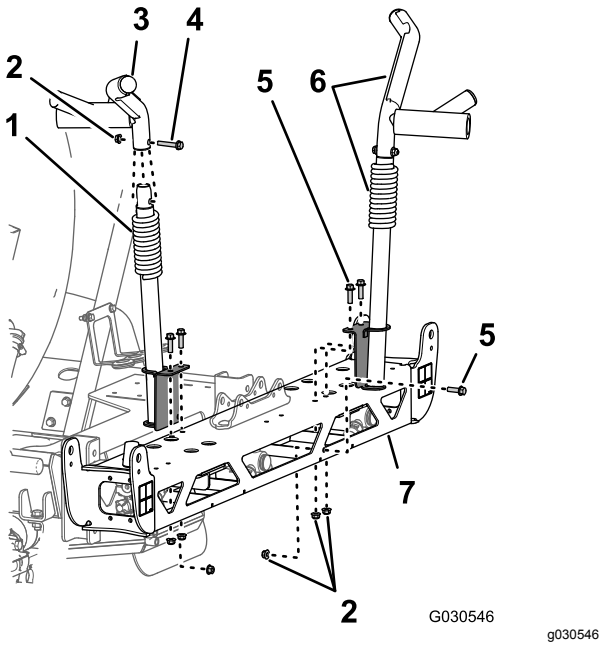

Figure 77

1. Lower cradle assembly
2. Flange locknut (3/8 inch)
3. Upper cradle assembly
4. Flange-head bolt (3/8 x 2 inches)
5. Flange-head bolt (3/8 x 1-1/4 inches)
6. Upper and lower cradle assemblies
7. Frame—center boom section

2. Remove the 3 flange-head bolt (3/8 x 2 inches) and 3 flange locknut (3/8 inch) that secure the left lower boom cradle to the frame of the center boom section, and remove the cradle (Figure 77).

   Note: Retain the 3 flange-head bolt (3/8 x 2 inches) and 3 flange locknut (3/8 inch) for installation of the new left lower boom cradle onto the new center boom section in Assembling the Cradles to the Center Boom Section (page 55).

   Note: You no longer need the left lower boom cradle that you removed from the machine.

3. At the right cradle, remove the horizontal and 2 vertical flange-head bolt (3/8 x 1-1/4 inches) and 3 flange locknut (3/8 inch) that secure the right boom-cradle assembly to the frame of the center boom section (Figure 77).

   Note: Retain the right cradle assembly, flange-head bolts, and flange locknuts for installation in Assembling the Cradles to the Center Boom Section (page 55).

4. Remove flange locknuts (5/16 inch) that secure the left and right bumpers at the ends of the frame of the center boom section (Figure 78).

   Note: Retain the bumpers and locknuts for installation.

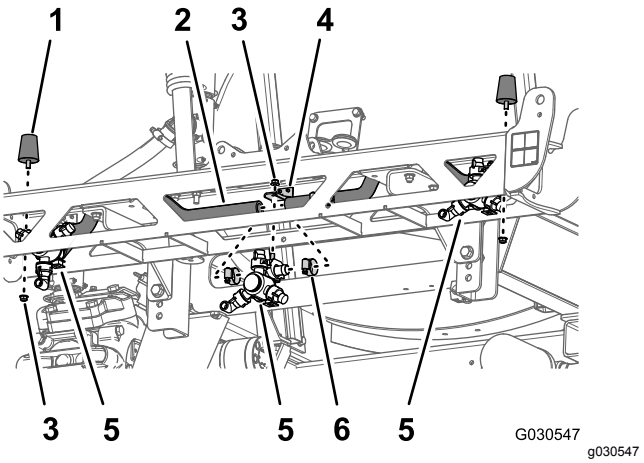

Figure 78

1. Bumper
2. Hose (3/4 inch inside diameter)
3. Flange locknut (5/16 inch)
4. Nozzle mount
5. Sprayer nozzle
6. Hose clamp

Removing Sprayer Nozzles

1. Remove 4 hose clamps that secure the 3 sprayer nozzles to the hoses (3/4 inch inside diameter (Figure 78).
2. Remove the flange locknut (5/16 inch) that secure the 3 sprayer nozzles to the nozzle mounts of the center boom section, and remove the nozzles (Figure 78).

   Note: Retain the sprayer nozzles and flange locknuts for installation in Installing the Nozzles in the New Center Boom Section (page 54).

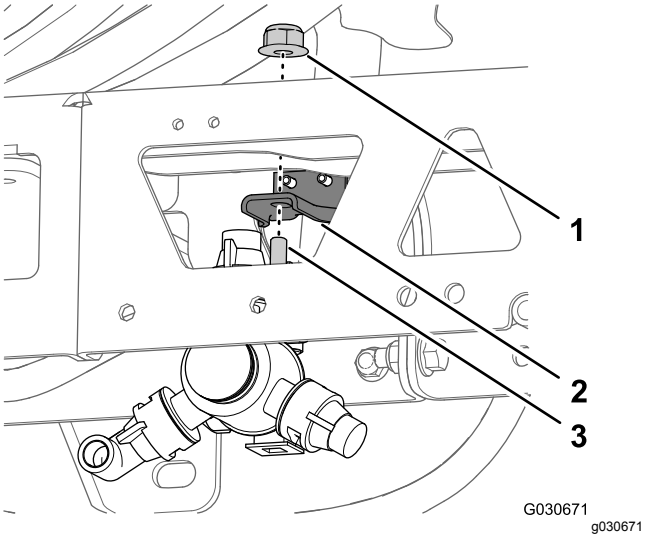

Figure 79

1. Flange locknut (5/16 inch)
2. Nozzle mount
3. Hex-head bolt (5/16 x 3/4 inch—sprayer nozzle)

3. Remove 2 carriage bolts (1/2 x 1-1/4 inches) and 2 flange locknuts (1/2 inch) that secure the cylinder mount to the center boom section and remove the mount (Figure 80).

   Note: You no longer need the cylinder mount that you removed from the machine.

   Note: Retain the carriage bolts, flange locknuts, hoses, and clamps for installation in Assembling the Center-Boom Section Trusses (page 53).

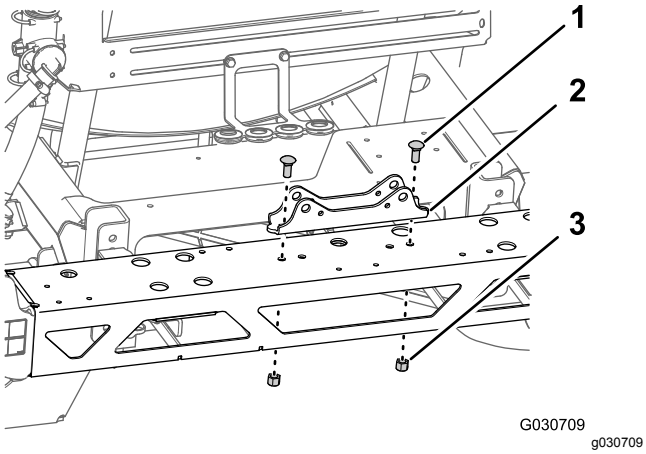

Figure 80

1. Carriage bolts (1/2 x 1-1/4 inches)
2. Cylinder mount
3. Locknuts (1/2 inch)

Removing the Center Boom Section

1. If your machine is equipped with the optional Covered Boom Kit, remove the cover from the center boom sections.
2. Support the center boom section with lifting equipment.
3. Remove the 4 flange-head bolts (1/2 x 1-1/4 inches) and 4 flange locknuts (1/2 inch) that secure the support brackets of the center boom section to the mounting channel on the frame for the sprayer, and remove the center boom section from the machine (Figure 81).

   Note: Retain the bolts (1/2 x 1-1/4 inches) and locknuts (1/2 inch) for installation of the new center boom section.

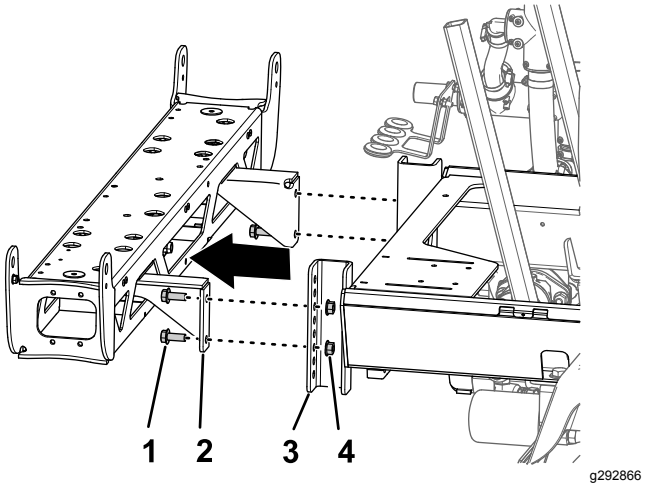

Figure 81

1. Flange-head bolt (1/2 x 1-1/4 inches)
2. Support bracket (center boom section)
3. Mounting channel (sprayer frame)
4. Flange locknut (1/2 inch)

4. Remove the 2 flange-head capscrews (3/8 x 1 inch) and 2 flange locknuts (3/8 inch) that secure the support bracket to the center boom section, and remove the bracket (Figure 82).

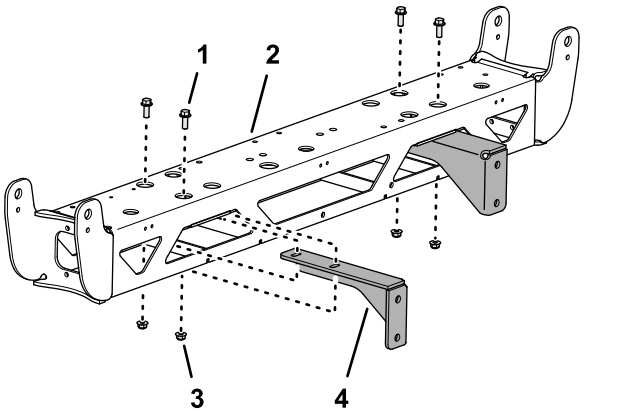

Figure 82

1. Flange-head capscrew (3/8 x 1 inch)
2. Center boom section
3. Flange locknut (3/8 inch)
4. Support bracket

5. Repeat step 4 for the other support bracket (Figure 82).

Note: Retain the flange-head capscrews (3/8 x 1 inch) and flange locknuts (3/8 inch) for installation in Assembling the Center-Boom Section Trusses (page 53). You no longer need the center boom section and support brackets.

17

Assembling the Rear Wire Harness to the Machine

Parts needed for this procedure:

1	Rear wire harness
5	Cable ties

Routing Wire Harness Along the Frame Tube

1. Locate the 165 cm (65 inches) branch and the 203 cm (80 inches) branch of the new electrical harness (Figure 83).

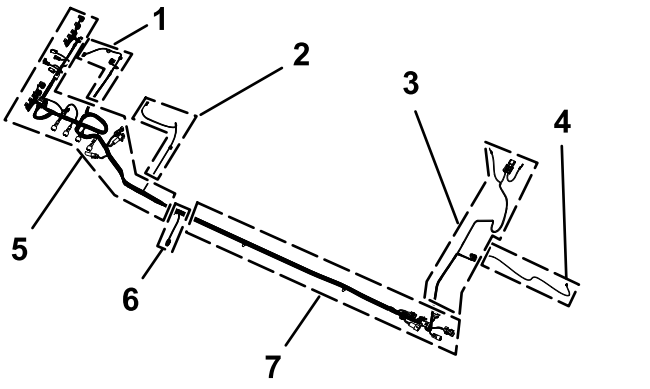

Figure 83

1. 75.5 cm (31 inches) wire harness branch—FLOW METER AND AGITATION VALVE
2. 86.6 cm (34 inches) wire harness branch—SPRAY-PUMP SOLENOID
3. 108 cm (42-1/2 inches) wire harness branch—ring terminals and fuse (unmarked)
4. 180 cm (71 inches) wire harness branch—TO SPRAY PUMP SWITCH
5. 218.4 cm (86 inches) wire harness branch—ASC10, lift cylinder solenoids, NOZZLE-VALVES 1 through 10
6. 30.5 cm (12 inches) wire harness branch—speed sensor
7. 127 cm (50 inches) wire harness branch—front harness interface connectors

2. Route the 180 cm (71 inches) branch, 108 cm (42-1/2 inches) branch, and the 127 cm (50 inches) branch of the new electrical harness under the frame channel (Figure 84).

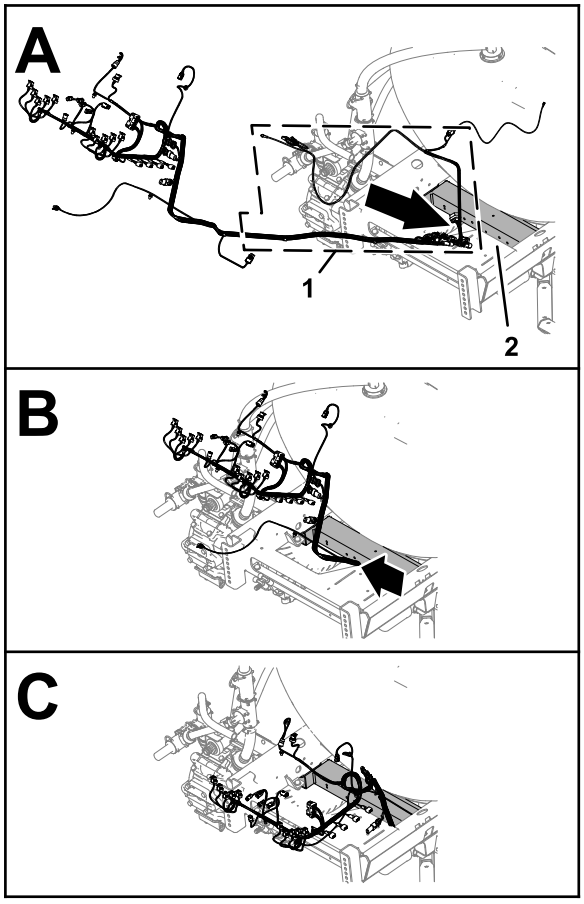

g307575

Figure 84

1. 180 cm (71 inches), 108 cm (42-1/2 inches), and the 127 cm (50 inches) branches (electrical harness)
2. Frame channel

3. Route the 180 cm (71 inches), 108 cm (42-1/2 inches), and the 127 cm (50 inches) branches of the electrical harness forward along the right frame tube (Figure 85).

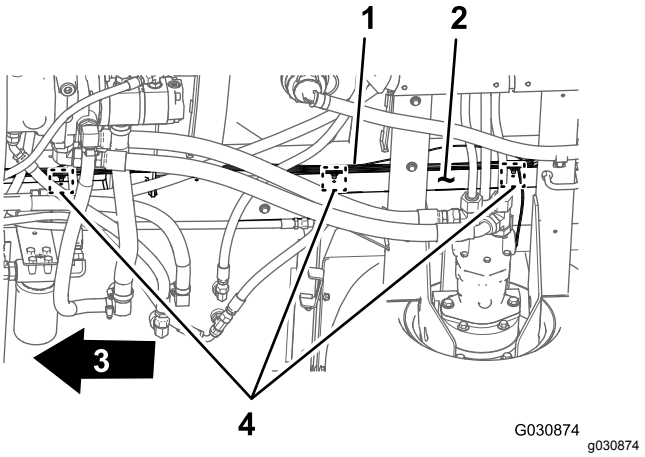

G030874

g030874

Figure 85

1. Rear wire harness—180 cm (71 inches), 108 cm (42-1/2 inches), and the 127 cm (50 inches) branches
2. Right frame tube
3. Front of the machine
4. Push-in fasteners

4. Insert the push-in anchors of the 127 cm (50 inches) branch of the rear wire harness into the holes in the right frame tube (Figure 85) where the fir trees of the old rear harness where removed; refer to step 3 in Disconnecting the Front and Rear Wire Harnesses (page 26).

Connecting the Front and Rear Wire Harnesses

Note: Use a hoist the raise the machine when connecting the front and rear wire harnesses.

1. From under the machine along the right frame tube, locate the electrical connectors for the front and rear wire harnesses of the machine (Figure 86).

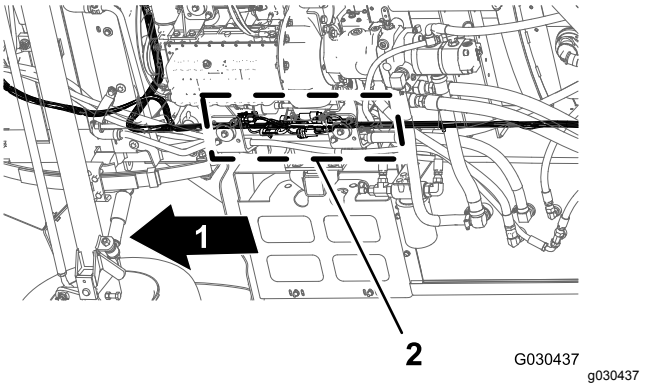

G030437

g030437

Figure 86

1. Front of the machine
2. Connector interfaces (front and rear wire harnesses)

Note: You will not use the 3-socket connector of the front harness and the 2-socket connector of the rear harness (Figure 87).

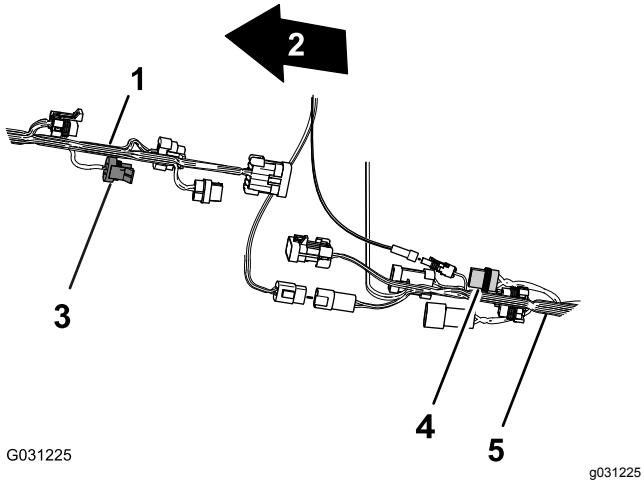

Figure 87

1. Front wire harness of the machine
2. Front of the machine
3. 3-socket connector—**not used** (flow meter—front harness)
4. 2-socket connector—**not used** (hose-reel power—rear harness)
5. Rear wire harness of the machine

2. Connect the 10-socket connector of the front harness for the sprayer-harness interconnect into the 10-pin connector of the rear harness for the sprayer-harness interconnect (Figure 88).

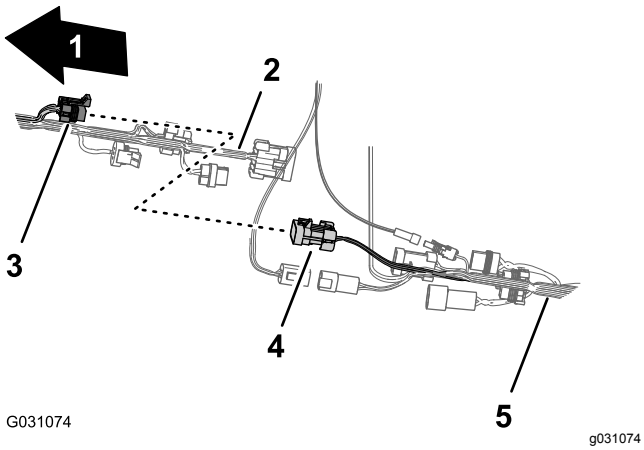

Figure 88

1. Front of the machine
2. Front wire harness of the machine
3. 10-socket connector—sprayer-harness interconnect (front harness)
4. 10-pin connector—sprayer-harness interconnect (rear harness)
5. Rear wire harness of the machine

3. Connect the 8-pin connector of the front harness for the sprayer-harness interconnect into the 8-socket connector of the rear harness for the rate switch (Figure 89).

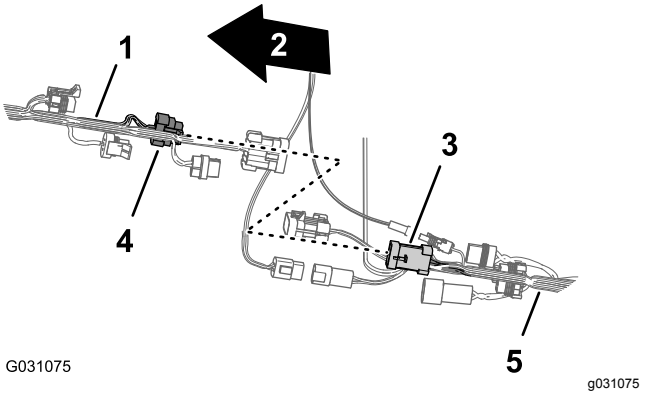

Figure 89

1. Front wire harness of the machine
2. Front of the machine
3. 8-socket connector—rate switch (rear harness)
4. 8-pin connector—sprayer-harness interconnect (front harness)
5. Rear wire harness of the machine

4. Connect the 2-pin connector of the front harness for the rinse pump into the 2-socket connector of the rear harness for the rinse pump (Figure 90).

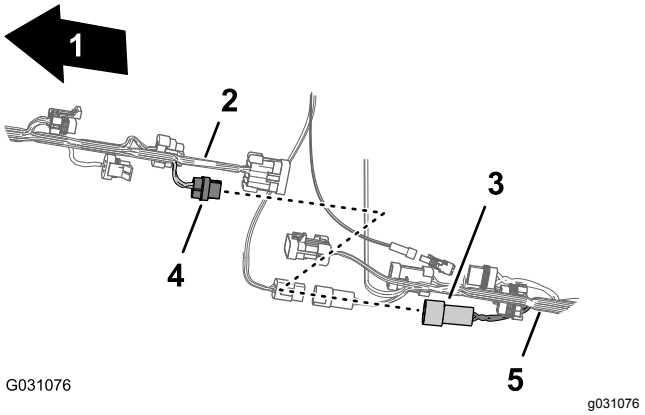

Figure 90

1. Front of the machine
2. Front wire harness of the machine
3. 2-socket connector—rinse pump (rear harness)
4. 2-pin connector—rinse pump (front harness)
5. Rear wire harness of the machine

5. Connect the 10-pin connector of the front harness for the sprayer-harness interconnect into the 10-socket connector of the rear harness for the sprayer-harness interconnect (Figure 91).

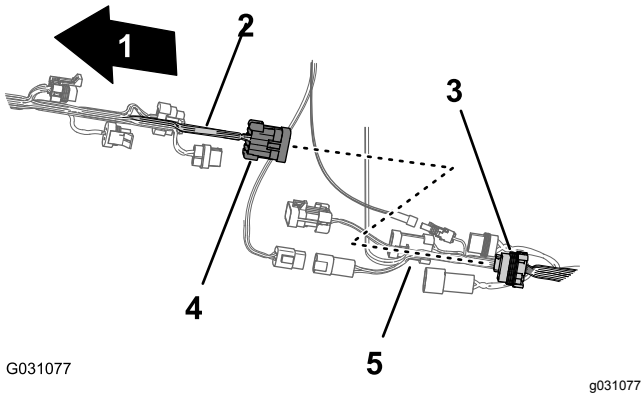

Figure 91

1. Front of the machine
2. Front wire harness of the machine
3. 10-socket connector—sprayer-harness interconnect (rear harness)
4. 10-pin connector—sprayer-harness interconnect (front harness)
5. Rear wire harness of the machine

6. To ease connecting the navigation-electrical and data harnesses, ensure that the 1-socket connector of the rear wire harness and the 4-socket connector of the rear wire harness are aligned to the top of the harness (Figure 92).

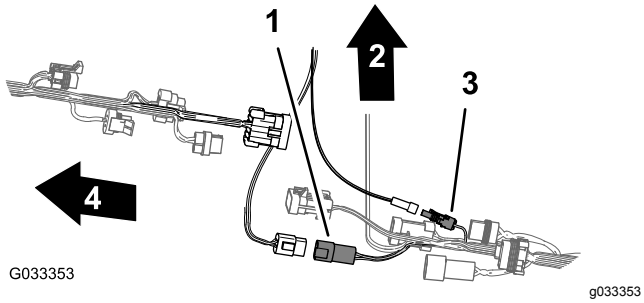

Figure 92

1. 4-socket connector (rear wire harness)
2. Top of the machine
3. 1-socket connector (rear wire harness)
4. Front of the machine

Routing the Pressure-Sense Tube

1. Route the pressure-sense tube for the dash gauge along the rear wire harness (Figure 93).

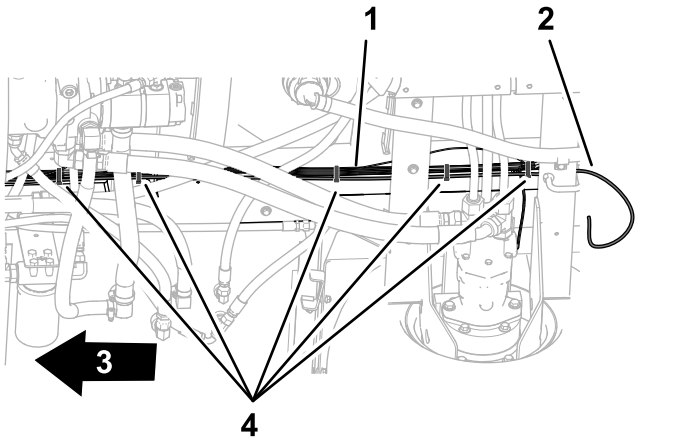

Figure 93

1. Rear wire hanress
2. Pressure-sense tube
3. Front of the machine
4. Cable ties

2. Secure the tube to the harness with 5 cable ties.

Routing the Wire Harness for the Sprayer Pump

1. Route the 86.6 cm (34 inches) wire harness branch for the spray-pump solenoid across the top of the sprayer frame channel and down toward the sprayer pump solenoid (Figure 94).

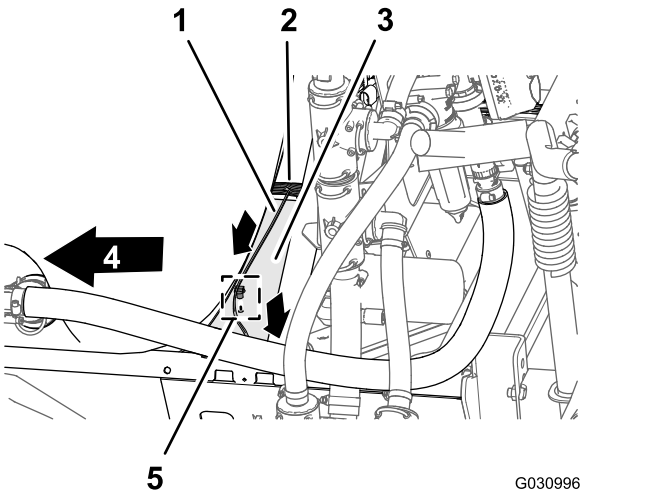

Figure 94

1. 86.6 cm (34 inches) wire harness branch—spray-pump solenoid
2. 218.4 cm (86 inches) wire harness branch—ASC10, lift cylinder solenoids, nozzle-valves 1 through 10
3. Channel (sprayer frame)
4. Front of the machine
5. push-in fastener

2. Insert the push-in fastener of the 86.6 cm (34 inches) wire harness branch into the hole in the sprayer frame channel (Figure 94).

Connecting the Wire Harness to the Sprayer Pump and the Speed Sensor

1. At the back of the machine—inboard of the sprayer pump, connect the 2-socket connector labeled **Spray Pump Solenoid** of the 86.6 cm (34 inches) wire harness branch into the 2-pin connector of the relay for the pump (Figure 95).

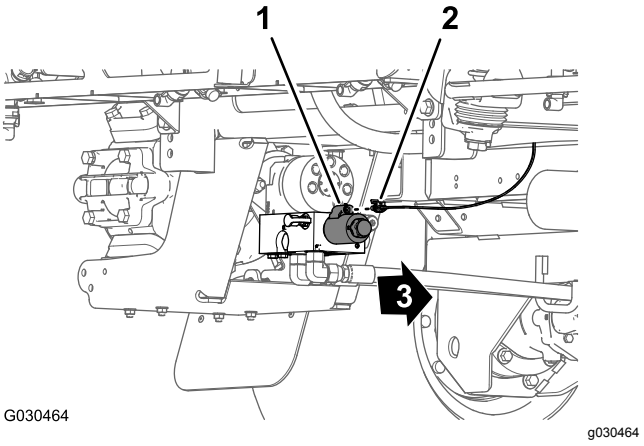

Figure 95

1. 2-pin connector (pump relay)
2. 2-socket connector—86.6 cm (34 inches) wire harness branch
3. Front of the machine

2. At back of the machine (between the right frame tube and the right fender) connect the unlabeled 3-pin connector of the 30.5 cm (12 inches) branch of the rear wire harness to the 3-socket connector of the right traction motor speed-sensor harness (Figure 96).

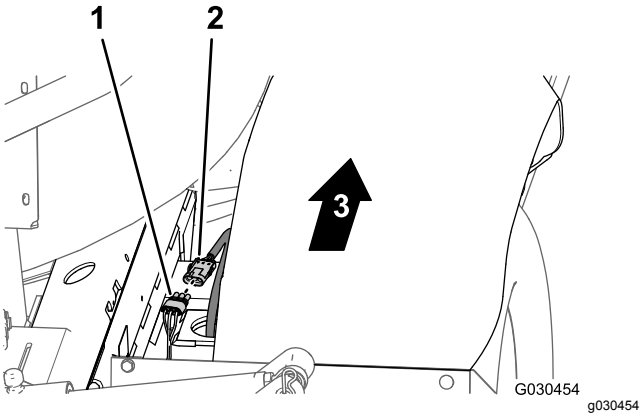

Figure 96

1. 3-socket connector—30.5 cm (12 inches) branch (rear wire harness)
2. 3-pin connector (right traction motor speed-sensor harness)
3. Front of the machine

18

Removing the Manifold Mount for the 3-Boom Section System

No Parts Required

Procedure

1. Remove the 2 pan-head screws (#10 x 5/8 inch) and 2 washer (#10) that secure the T-fitting to the left side of the manifold mount (Figure 97).

   Note: Retain the screws and washers for installation in 19 Installing the Manifold Mount for the 10-Valve System (page 45).

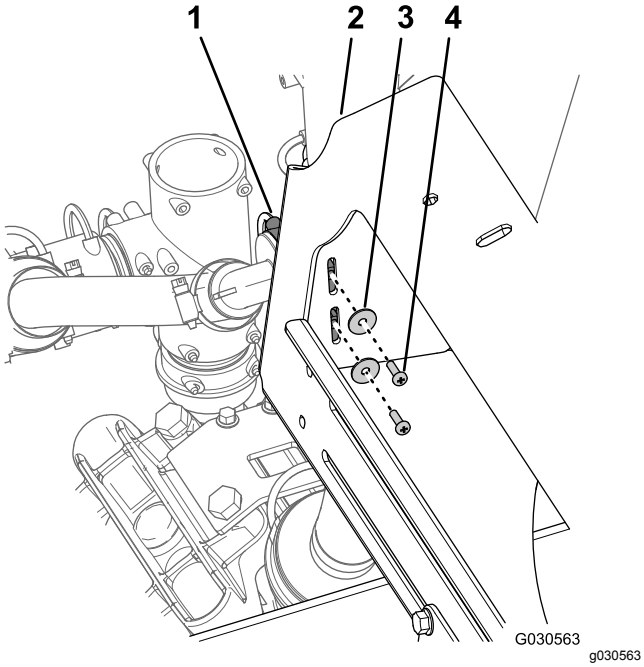

Figure 97

1. T-fitting
2. Manifold mount (3-boom section system)
3. Washer (#10)
4. Pan-head screw (#10 x 5/8 inch)

2. **For machines with the optional Tank-Rinse Kit, perform the following:**

   A. Remove the bolts (3/8 x 2-3/4 inches), flange locknut (3/8 inch), and washers (3/8 inch) that secure the straps for the rinse tank to the manifold mount (Figure 98).

   Note: Retain the bolts, nuts, and washers for installation in 19 Installing the Manifold Mount for the 10-Valve System (page 45).

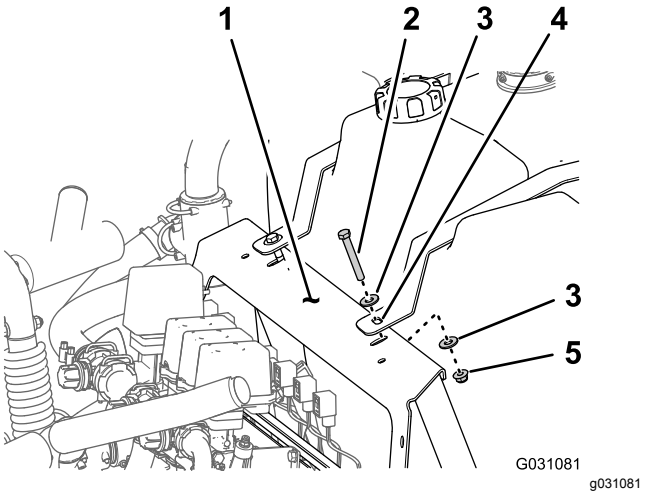

Figure 98

1. Washer (3/8 inch)
2. Flange locknut (3/8 inch)
3. Manifold mount
4. Bolt (3/8 x 2-3/4 inches)
5. Rinse-tank strap

   B. Secure the rinse tank to the sprayer tank with a piece of rope.

3. Remove the 4 flange-head bolt (3/8 x 1 inch) and 4 flange-locknut (3/8 inch) that secure the flange of the manifold mount to the frame of the sprayer chassis, and remove the manifold mount from the machine (Figure 99).

   Note: Retain the bolts and locknuts for installation in 19 Installing the Manifold Mount for the 10-Valve System (page 45).

   Note: You no longer need the old manifold mount that you removed from the machine.

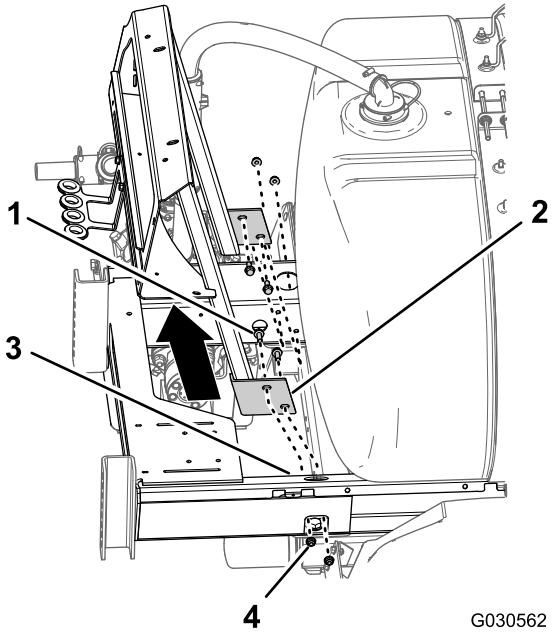

Figure 99

1. Flange-head bolt (3/8 x 1 inch)
2. Flange (manifold mount—3-boom section system)
3. Frame (sprayer chassis)
4. Flange locknut (3/8 inch)

19

Installing the Manifold Mount for the 10-Valve System

Parts needed for this procedure:

1	Manifold mount (10-valve system)

Procedure

1. Align the holes in the flange of the manifold mount for the 10-valve system with the holes in the frame of the sprayer chassis (Figure 100).

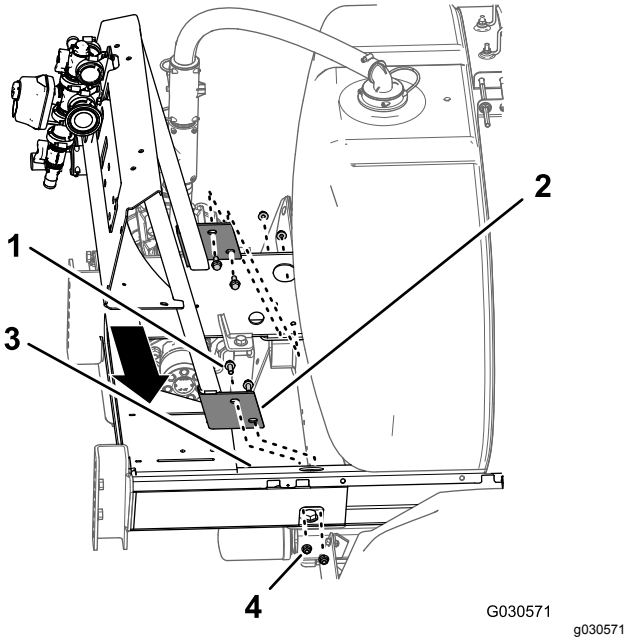

Figure 100

1. Flange-head bolt (3/8 x 1 inch)
2. Flange (manifold mount—10-valve system)
3. Frame (sprayer chassis)
4. Flange-locknut (3/8 inch)

2. Assemble the manifold mount to the sprayer chassis (Figure 100) with the 4 flange-head bolt (3/8 x 1 inch) and 4 flange-locknut (3/8 inch) that you removed in step 3 in 18 Removing the

Manifold Mount for the 3-Boom Section System (page 43).

3. Torque the bolts and nuts to 37 to 45 N·m (27 to 33 ft-lb).
4. At the left side of the manifold mount, align the holes in the T-fitting with the slots in the manifold mount (Figure 101).

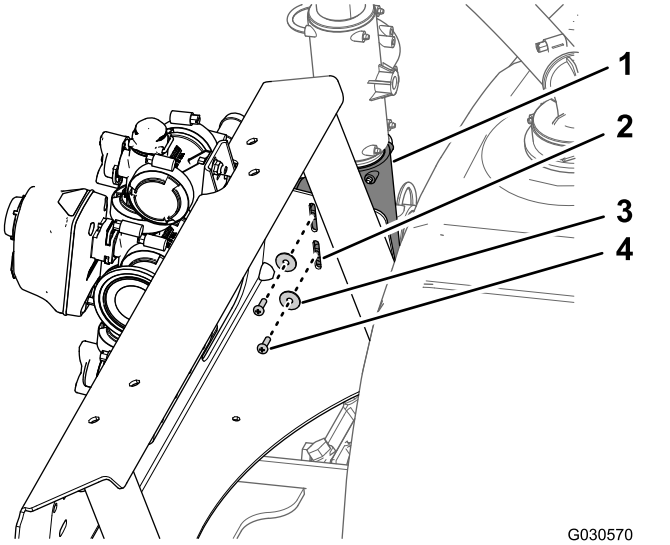

Figure 101

1. T-fitting
2. Manifold mount (10-valve system)
3. Washer (#10)
4. Pan-head screw (#10 x 5/8 inch)

5. Secure the T-fitting to the manifold mount (Figure 101) with the 2 pan-head screws (#10 x 5/8 inch) and 2 washer (#10) that you removed in step 1 of 18 Removing the Manifold Mount for the 3-Boom Section System (page 43).
6. **For machines with the optional Tank-Rinse Kit, perform the following:**

   A. Align the hole in the rinse-tank strap with the hole in the manifold mount (Figure 102).

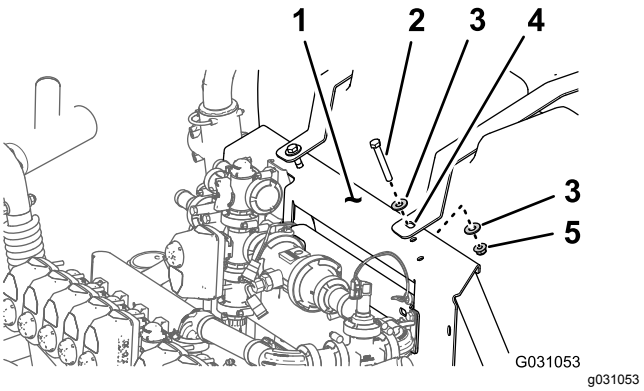

Figure 102

1. Manifold mount
2. Bolt (3/8 x 2-3/4 inches)
3. Washer (3/8 inch)
4. Rinse-tank strap
5. Flange locknut (3/8 inch)

   B. Assemble the strap to the mount (Figure 102) with the 2 bolts (3/8 x 2-3/4 inches), 4 washers (3/8 inch), and 2 flange locknuts (3/8 inch) that you removed in step 5C of Preparing the Sprayer Tank and Optional Rinse Tank (page 6).

   C. Tighten the bolt and locknut by hand (Figure 102).

   Note: Once the rinse tank has been initially filled the rinse tank strap fasteners should be checked and tightened if necessary as the weight of the liquid can further seat the tank against the frame.

   D. Repeat steps A through C for the rinse-tank strap at the other side of the machine.

20

Installing the Hoses at the Left Side of the Manifold Mount

Parts needed for this procedure:

1	Hose (1 x 41 inches)
1	Supply hose (1 x 23-1/8 inches) and straight-barbed fitting
1	Agitation bypass hose (1 x 10 inches) and 90° barbed fitting

Installing the Supply Hose for the Agitator Nozzles

1. Assemble the hose (1 x 41 inches) to the barbed T-fitting at the rear agitation nozzle in the sprayer tank (Figure 103).

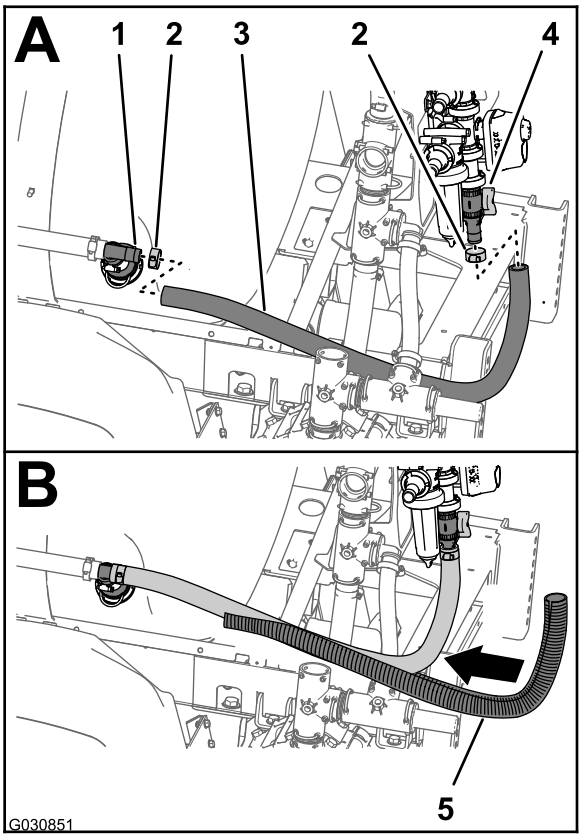

Figure 103

1. T-fitting (agitation nozzle)
2. Hose clamp
3. Hose (1 x 41 inches)
4. Bypass valve
5. Convoluted tubing

2. Secure the hose to the T-fitting with the clamp (Figure 103) that you removed in step 2 of Removing the Agitation Valve, Ball Valve, and Hoses (page 32).
3. Assemble the other end of the hose (1 x 41 inches) onto the straight barbed fitting at the bottom of the bypass valve (Figure 103).
4. Secure the hose to the straight fitting with a hose clamp (Figure 103) that you removed in Disassembling the Agitation and Bypass Valves (page 33).
5. Assemble the convoluted tubing (Figure 103) over the hose (1 x 41 inches).

Installing the Supply Hose and Bypass Hose

Note: If your machine has the optional Chemical Pre-Mix Kit, skip the instructions in this section and preform the steps in Installing the Supply-Hose Assembly (page 101) and Replacing the Bypass Hose for the Agitation Valve (page 98).

1. Assemble the hub of the straight-barbed fitting at the end of the supply hose (1 x 23-1/8 inches) into the T-fitting at the outlet port for the sprayer pump (Figure 104) with the retainer that you removed in step 3 of Removing the Agitation Valve, Ball Valve, and Hoses (page 32).

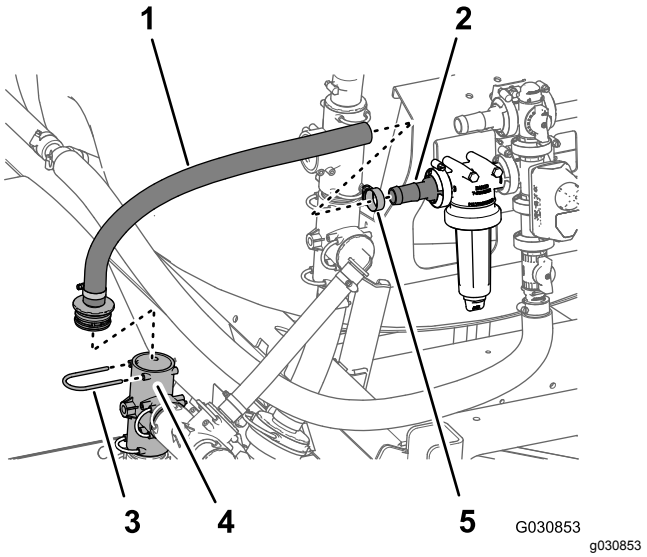

Figure 104

1. Supply hose (1 x 23-1/8 inches) and straight-barbed fitting
2. Straight-barbed fitting (filter head)
3. Retainer
4. T-fitting (outlet port for the sprayer pump)
5. Hose clamp

2. Assemble the supply hose (1 x 23-1/8 inches) with the straight-barbed fitting onto the

straight-barbed fitting in the filter head (Figure 104).

3. Secure the hose the barbed fitting with a clamp that you removed in Disassembling the Agitation and Bypass Valves (page 33).
4. Rotate the upper T-fitting at the left side of the manifold bracket 90° counterclockwise as shown in Figure 105.

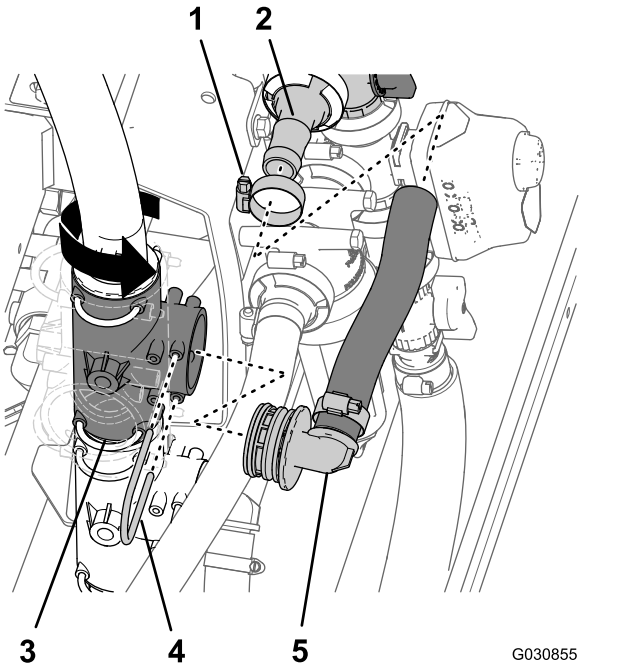

Figure 105

1. Hose clamp
2. Straight-barbed fitting (agitation-bypass valve)
3. T-fitting (vertically mounted—upper)
4. Retainer
5. Agitation bypass hose (1 x 10 inches) and 90° barbed fitting

5. Assemble the agitation bypass hose (1 x 10 inches) onto the straight-barbed fitting of the agitation-bypass valve (Figure 105).
6. Assemble the hub of the 90° barbed fitting at the end of the agitation bypass hose (1 x 10 inches) into the upper T-fitting at the left side of the manifold bracket (Figure 105) with the retainer that you removed in step 4 of Removing the Agitation Valve, Ball Valve, and Hoses (page 32).
7. Secure the agitation bypass hose (1 x 10 inches) to the straight-barbed fitting of the agitation-bypass valve with a hose clamp that you removed in Disassembling the Agitation and Bypass Valves (page 33).

21

Installing the Rear Wire Harness

No Parts Required

Routing the Wire Harness at the Manifold Mount

1. Route the 218.4 cm (86 inches) branch of the wire harness inboard of the support strut for the valve mount and rearward toward the 10-valve mount as shown in Figure 106.

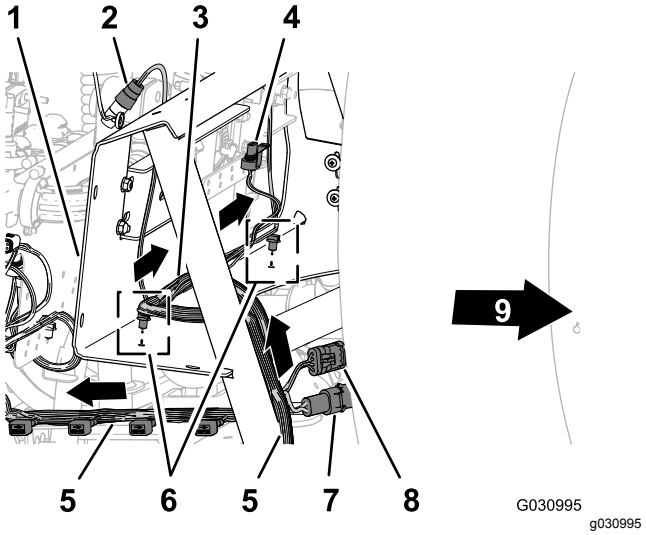

Figure 106

1. Manifold mount
2. 3-socket connector (flow meter)
3. 75.5 cm (31 inches) wire harness branch—flow meter and agitation valve
4. Electrical connector (Agitation valve)
5. 218.4 cm (86 inches) wire harness branch—ASC10, lift cylinder solenoids, nozzle-valves 1 through 10
6. push-in fasteners
7. 2-pin connector (hose-reel power)
8. 3-socket connector (hose reel)
9. Front of the machine

2. Route the 75.5 cm (31 inches) wire harness branch for the flow meter and agitation valve across the front of the manifold mount (Figure 106).
3. Insert the push-in fasteners of the 75.5 cm (31 inches) wire harness branch into the holes in the lower flange of the manifold mount (Figure 106).

Routing the Wire Harness at the 10-Valve Mount

1. Route the 218.4 cm (86 inches) wire harness branch across the back of the 10-valve mount with the 10 connectors for the nozzle valves rearward and below the valves (Figure 107).

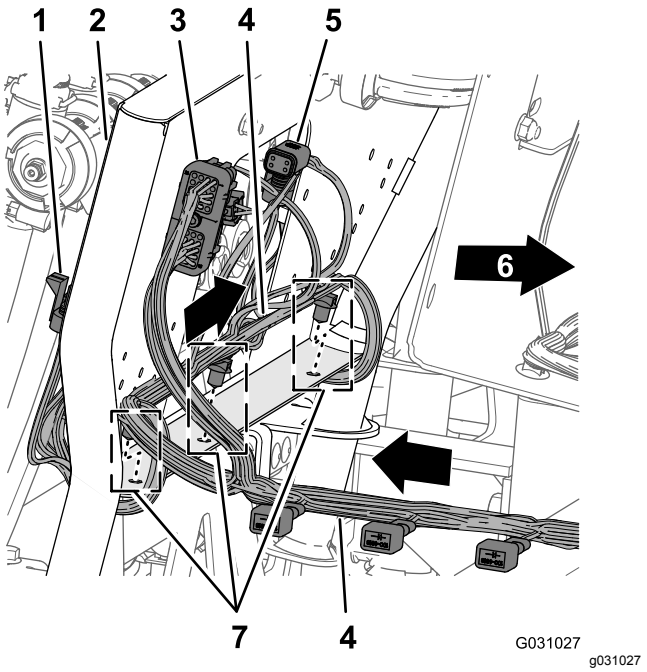

Figure 107

1. 3-socket connector (nozzle-valve position 10)
2. 10-valve mount
3. 40-socket connector (ASC 10)
4. 218.4 cm (86 inches) wire harness branch—ASC10, lift cylinder solenoids, nozzle-valves 1 through 10
5. 4-socket connector (To ASC 10)
6. Front of the machine
7. push-in fasteners

2. Insert the push-in fasteners of the 218.4 cm (86 inches) wire harness branch into the holes in the lower flange of the 10-valve mount (Figure 107).

Connecting the Wire Harness to the Manifold Mount Components

1. Route the connectors of the 218.4 cm (86 inches) and 75.5 cm (31 inches) wire harness branchs labeled **Flow Meter** and labeled **Pressure Transducer** rearward of the manifold mount (Figure 108).

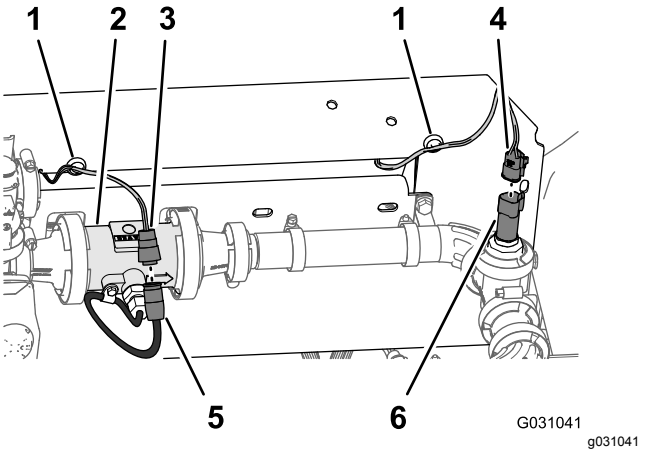

Figure 108

1. Magnetic-harness anchor
2. Flow meter
3. 3-socket connector (rear wire harness—labeled Flow Meter)
4. 3-socket connector (rear wire harness—labeled Pressure Transducer)
5. 3-pin connector (flow-meter harness)
6. 3-pin connector (pressure transducer)

2. Connect the 3-socket connector of the 75.5 cm (31 inches) wire harness branch for the flow meter (not labeled) into the 3-pin connector of the harness of the flow meter (Figure 108).
3. Connect the 3-socket connector of the 218.4 cm (86 inches) wire harness branch for the labeled **Pressure Transducer** into the 3-pin connector of the pressure transducer (Figure 108).
4. Adhere the magnet-harness anchors for the flow meter and the pressure transducer onto the surface of the manifold mount (Figure 108).
5. Route the 3-pin connector for the harness of the agitation valve forward of the manifold mount (Figure 109).

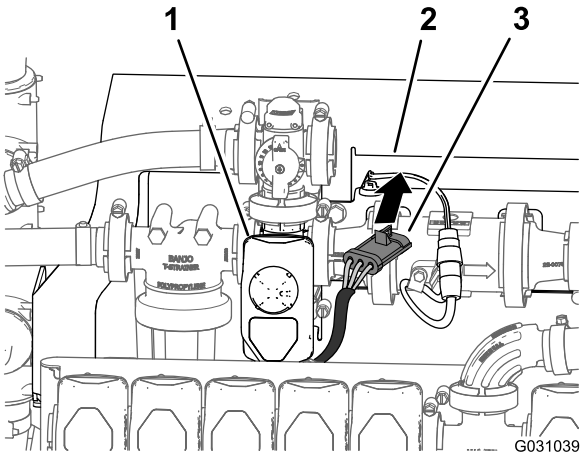

Figure 109

1. Agitation valve
2. Manifold mount
3. 3-socket connector (agitation-valve harness)

6. Connect the 3-pin connector for the harness of the agitation valve into the 3-socket connector of the 203 cm (80 inches) wire harness branch labeled **Agitation Valve** (Figure 110).

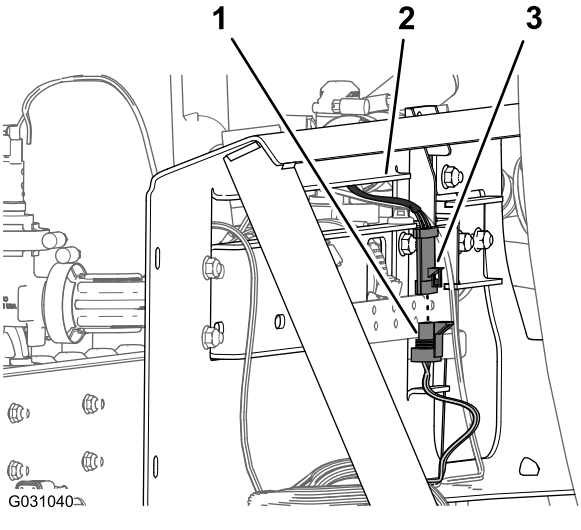

Figure 110

1. 3-pin connector (rear wire harness—labeled Agitation Valve)
2. Manifold mount
3. 3-socket connector (agitation-valve harness)

Connecting the Wire Harness to the Solenoids for the Lift-Cylinder Manifold

1. At the bottom of the lift-cylinder manifold, connect the 2-socket connector of the rear wire harness labeled **Enable Solenoid** into the 2-pin connector for the enable solenoid (Figure 111 and Figure 112).

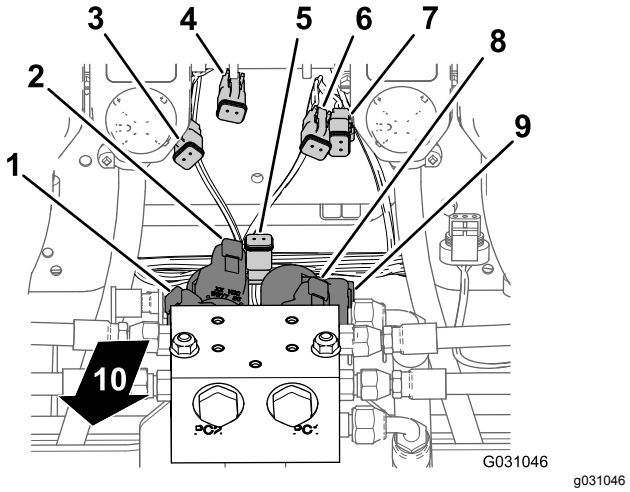

Figure 111

1. 2-pin connector—left down solenoid (lift-cylinder manifold)
2. 2-pin connector—left up solenoid (lift-cylinder manifold)
3. 2-socket connector—Left Down (main-harness connector)
4. 2-socket connector—Left Up (main-harness connector)
5. 2-socket connector—Enable Solenoid (main-harness connector)
6. 2-socket connector—Right Up (main-harness connector)
7. 2-socket connector—Right Up (main-harness connector)
8. 2-pin connector—right up solenoid (lift-cylinder manifold)
9. 2-pin connector—right down solenoid (lift-cylinder manifold)
10. Back of the machine

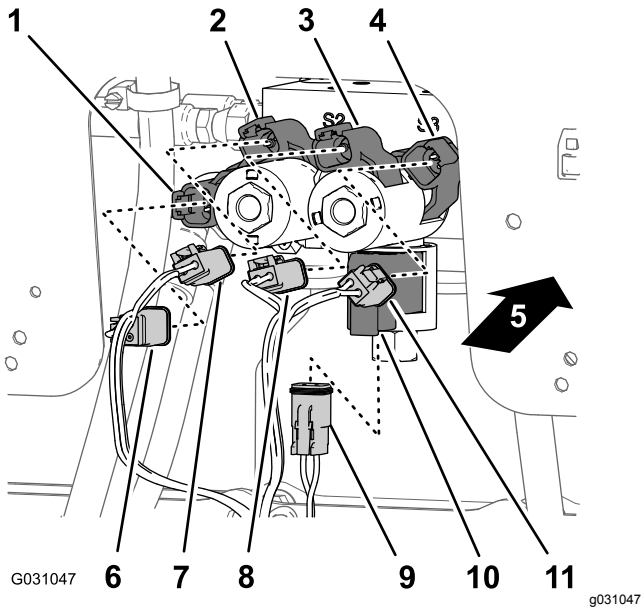

Figure 112

1. 2-pin connector—right down solenoid (lift-cylinder manifold)
2. 2-pin connector—right up solenoid (lift-cylinder manifold)
3. 2-pin connector—left up solenoid (lift-cylinder manifold)
4. 2-pin connector—left down solenoid (lift-cylinder manifold)
5. Back of the machine
6. 2-socket connector—Right Up (main-harness connector)
7. 2-socket connector—Right Up (main-harness connector)
8. 2-socket connector—Left Up (main-harness connector)
9. 2-socket connector—Enable Solenoid (main-harness connector)
10. 2–pin connector—enable solenoid (lift-cylinder manifold)
11. 2-socket connector—Left Down (main-harness connector)

2. At the lower right solenoid, connect the 2-socket connector of the rear wire harness labeled **Right Down** into the 2–pin connector for the right down solenoid (Figure 111 and Figure 112).
3. At the upper right solenoid, connect the 2-socket connector of the rear wire harness labeled **Right Up** into the 2–pin connector for the right up solenoid (Figure 111 and Figure 112).
4. At the lower left solenoid, connect the 2-socket connector of the rear wire harness labeled **Left Down** into the 2–pin connector for the left down solenoid (Figure 111 and Figure 112).
5. At the upper left solenoid, connect the 2-socket connector of the rear wire harness labeled **Left Up** into the 2–pin connector for the left up solenoid.

Connecting the Wire Harness to the Sprayer Valves

1. Route the 3-socket connectors of the 218.4 cm (86 inches) wire harness branch with labels **Nozzle Valve 1** through **Nozzle Valve 5** rearward of the 10-valve mount and below nozzle valves 1 through 5 (Figure 113).

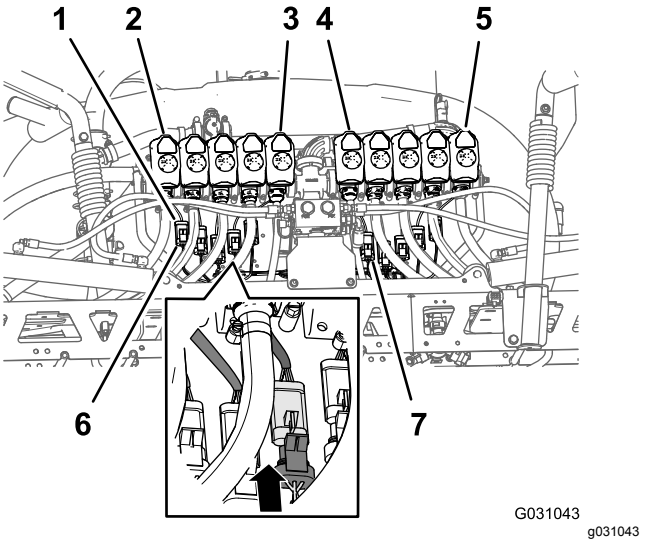

Figure 113

1. 3-pin connector (nozzle-valve harness)
2. Nozzle-valve 1
3. Nozzle-valve 5
4. Nozzle-valve 6
5. Nozzle-valve 10
6. 3-pin socket connector (rear wire harness—labeled Nozzle 1)
7. 3-pin socket connector (rear wire harness—labeled Nozzle 6)

2. Route the 3-socket connectors of the 218.4 cm (86 inches) wire harness branch with labels **Nozzle Valve 6** through **Nozzle Valve 10** rearward of the 10-valve mount and below nozzle-valves 6 through 10 (Figure 113).
3. Connect the 3-pin socket connector of the rear wire harness labeled **Nozzle 1** to the 3-pin connector of the harness for nozzle-valve 1 (Figure 113).

   Important: **It is important that you connect each labeled 3-pin socket connector of the rear wire harness to the correct 3-pin connector at each nozzle-valve position.**
4. Repeat step 3 at the nozzle-valve positions 2 through 10 (Figure 113).

Routing the Wire Harness through the Engine Compartment

1. Route the 108 cm (42-1/2 inches) branch of the wire harness up and into the rear part of the engine compartment, along the right support for the engine shroud—forward of the duct that connects the air filter and the engine (Figure 114).

   Note: You will secure the 108 cm (42-1/2 inches) branch of the rear wire harness in Routing the Navigation Electrical Harness to the Battery (page 77).

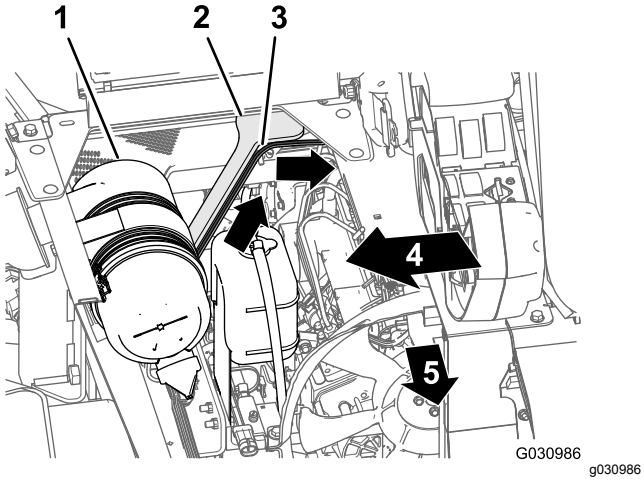

Figure 114

1. Air filter (engine)
2. Engine-shroud support (right)
3. 108 cm (42-1/2 inches) branch (rear wire harness)
4. Right side of the machine
5. Front of the machine

2. Route the 108 cm (42-1/2 inches) branch of the wire harness across the seat-box angle and down along the left support for the engine shroud (Figure 115).

   Note: You will secure the 108 cm (42-1/2 inches) branch of the rear wire harness in Routing the Navigation Electrical Harness to the Battery (page 77).

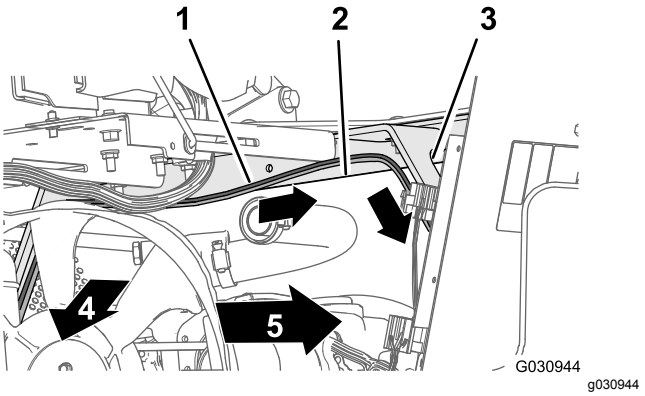

Figure 115

1. 108 cm (42-1/2 inches) branch (rear wire harness)
2. Seat-box angle
3. Engine-shroud support (left)
4. Front of the machine
5. Left side of the machine

3. Route the 108 cm (42-1/2 inches) branch of the wire harness down along the left support for the engine shroud and under the left frame tube (Figure 116).

   Note: You will secure the 108 cm (42-1/2 inches) branch of the rear wire harness in Routing the Navigation Electrical Harness to the Battery (page 77).

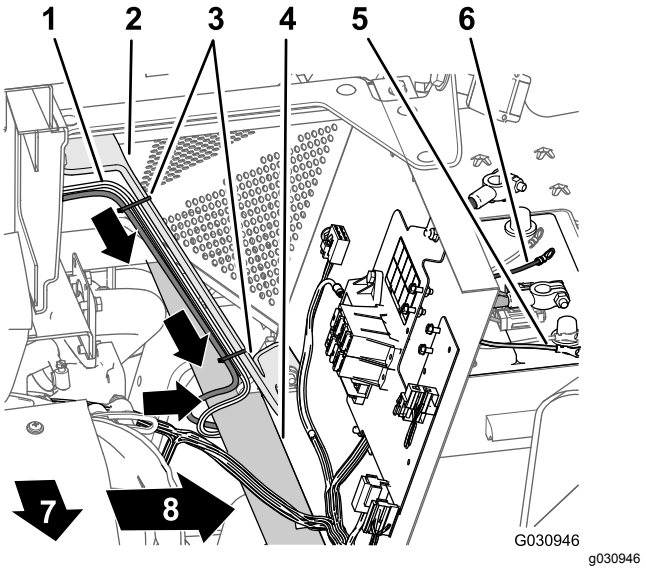

Figure 116

1. 165 cm (65 inches) branch (rear wire harness)
2. Engine-shroud support (left)
3. Cable ties
4. Left frame tube
5. Negative terminal (black wire)—108 cm (42-1/2 inches) branch (rear wire harness)
6. Positive terminal (red wire)—108 cm (42-1/2 inches) branch (rear wire harness)
7. Left side of the machine
8. Front of the machine

4. Route the 50 A fuse and the positive and negative ring terminals of the 108 cm (42-1/2 inches) branch of the wire harness to the top of the battery (Figure 116).

   Note: You will complete the installation of the ring terminals in Assembling the Rear Harness and Navigation Electrical Harness to the Battery Cables (page 80).

22

Preparing the New Center Boom Section

Parts needed for this procedure:

1	Outer center-section truss frame (left—long)
1	Center-section truss frame (middle—short)
1	Outer center-section truss frame (right—long)
4	Flange-head capscrew (3/8 x 1 inch)
	Flange locknut (3/8 inch)
1	Lower cradle assembly

Assembling the Center-Boom Section Trusses

1. Align the holes in vertical flanges of the middle center-section truss frame with the holes in the outer center-section truss frame (Figure 117).

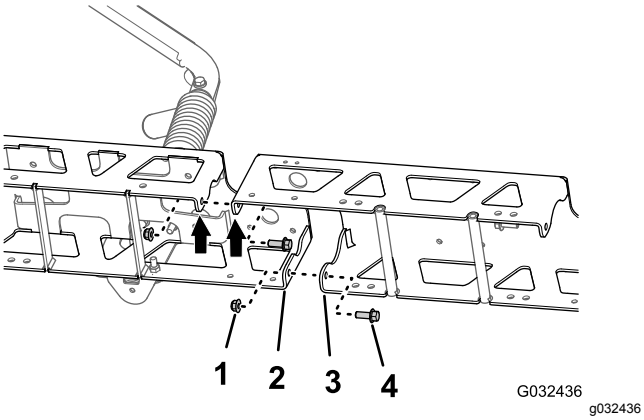

Figure 117

1. Flange locknut (3/8 inch)
2. Vertical flange (outer center-section truss frame)
3. Vertical flange (middle center-section truss frame)
4. Flange-head bolt (3/8 x 1 inch)

2. Loosely assemble the center-boom extension to the truss frame (Figure 117) with the 2 flange-head bolts (3/8 x 1 inch) and 2 flange locknuts (3/8 inch).
3. Align the holes in vertical flanges of the middle center-section truss frame with the holes in the other outer center-section truss frame (Figure 117).
4. Loosely assemble the center-boom extension to the other truss frame (Figure 117) with the 2 flange-head bolts (3/8 x 1 inch) and 2 flange locknuts (3/8 inch).
5. Align the holes in the cylinder mount with the holes at the centerline of the middle truss frame (Figure 118).

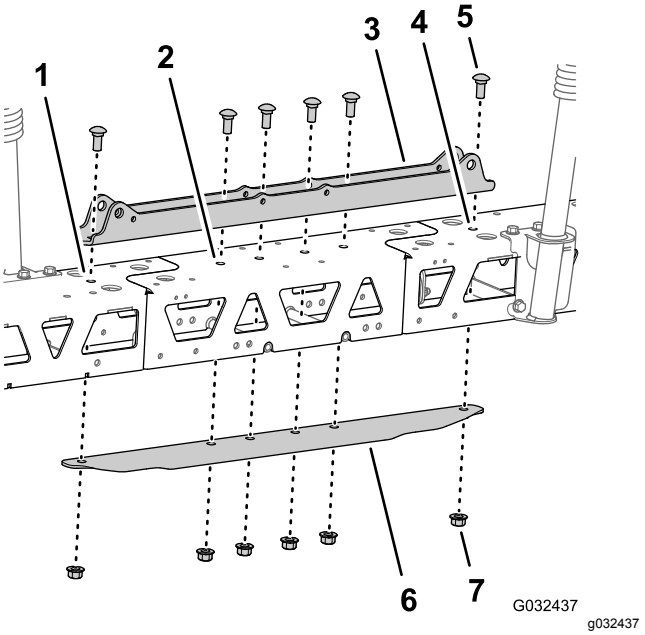

Figure 118

1. Left truss frame
2. Middle truss frame
3. Cylinder mount (wide)
4. Right truss frame
5. Carriage bolt (1/2 x 1-1/4 inches)
6. Stiffener channel (wide)
7. Flange locknut (1/2 inch)

6. Insert the stiffener channel into the center and outer truss frames and align the hole in the channele with the holes at the centerline of the middle truss frame (Figure 118).
7. Assemble the cylinder mount, trusses, center-boom extension, and stiffener channel with the 2 carriage bolt (1/2 x 1-1/4 inches) and 2 flange locknut (1/2 inch) that you removed in step 3 of Removing Sprayer Nozzles (page 37), and the 4 carriage bolt (1/2 x 1-1/4 inches) and 4 flange locknut (1/2 inch) from the GeoLink spray system finishing kit (Figure 118).

8. Torque the 3/8 inch flange head bolts and flange locknuts to 37 to 45 N·m (27 to 33 ft-lb).
9. Torque the 1/2 inch flange locknuts to 91 to 113 N·m (67 to 83 ft-lb).

Installing the Nozzles in the New Center Boom Section

1. Using lifting equipment, raise the new center boom section to a comfortable working height.
2. Working with the 3 sprayer nozzles that you removed in step 1 in Removing Sprayer Nozzles (page 37), remove the stainless steel screw (#12 x 1-1/4 inches) that secures the upper clamp half and double or single barbed-hose shank (3/4 inch) to the body of each of the sprayer nozzle, and remove the barbed-hose shanks (Figure 119).

   Note: The hex-head bolt (5/16 x 3/4 inch—stainless steel) separates from the upper clamp half when you open the clamp; retain the bolt for installation.

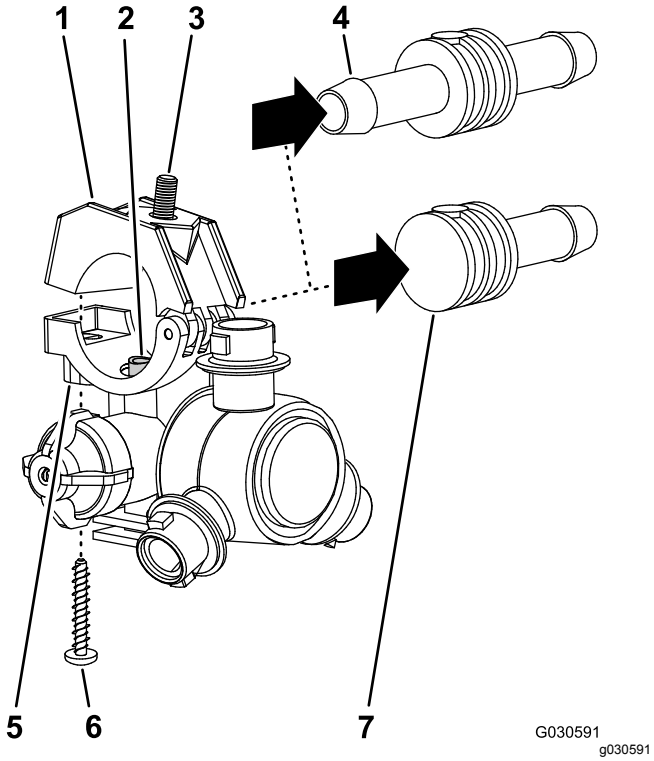

Figure 119

1. Upper clamp half
2. Transfer tube
3. Hex-head bolt (5/16 x 3/4 inch—stainless steel)
4. Double barbed-hose shank (3/4 inch)
5. Saddle (sprayer-nozzle body)
6. Stainless steel screw (#12 x 1-1/4 inches)
7. Single barbed-hose shank (3/4 inch)

3. At the center boom section, align the transfer tube in the saddle of a sprayer nozzle (Figure 120 and Figure 121) with the hole in the side of the single barbed-hose shank (1/2 inch).

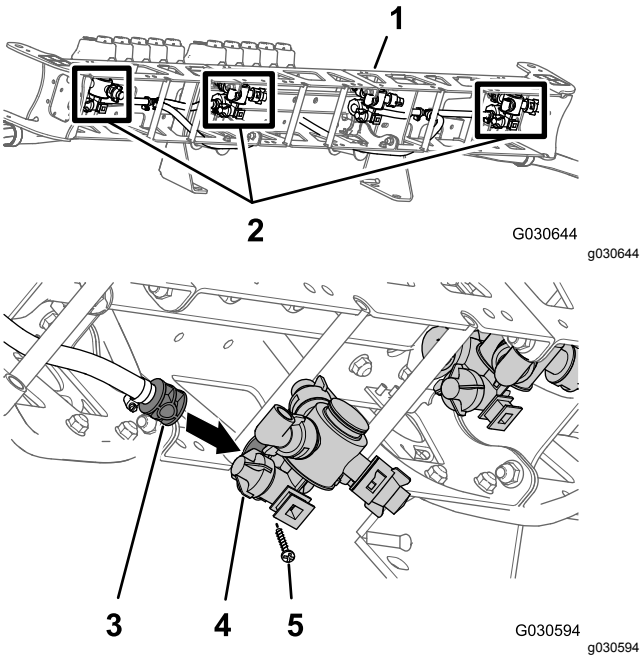

Figure 120

1. Center boom section (new)
2. Sprayer nozzles (from the old center boom section)
3. Single barbed-hose shank (1/2 inch)
4. Sprayer-nozzle body
5. Stainless steel screw (#12 x 1-1/4 inches)

4. Close the upper clamp half around the barbed-hose shank and secure the clamp half and spray-nozzle body (Figure 121) with the stainless steel screw (#12 x 1-1/4 inches).

   Note: Ensure that the hex-head bolt (5/16 x 3/4 inch) is seated in the recess in the upper clamp half when closing the clamp.

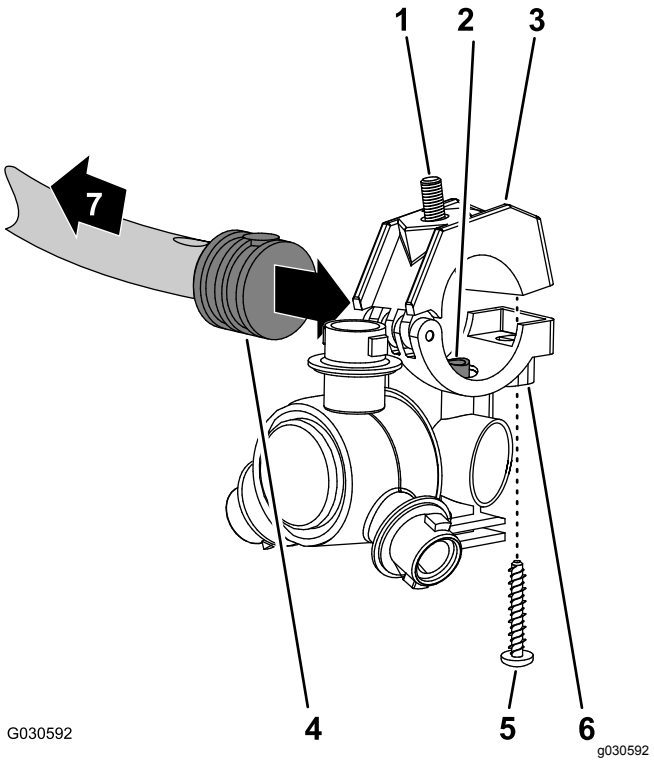

Figure 121

1. Hex-head bolt (5/16 x 3/4 inch—stainless steel)
2. Transfer tube
3. Upper clamp half
4. Single barbed-hose shank (1/2 inch)
5. Stainless steel screw (#12 x 1-1/4 inches)
6. Sprayer-nozzle body
7. Toward the boom section

5. Assemble the nozzle to the nozzle mount (Figure 79) with the flange locknut (5/16 inch) that you removed in step 2 in Removing Sprayer Nozzles (page 37).
6. Torque the flange locknut to 1978 to 2542 N·cm (175 to 225 in-lb).
7. Repeat steps 3 through 6 to the 2 other sprayer nozzles at the 2 other single barbed-hose shanks (1/2 inch).

Assembling the Cradles to the Center Boom Section

1. Align the holes in the mounting bracket of the right boom cradle that you removed in step 3 in Removing the Boom Cradle (page 36) with the holes at the top and back sides (to the right of the cylinder mount) of the new center boom section (Figure 122).

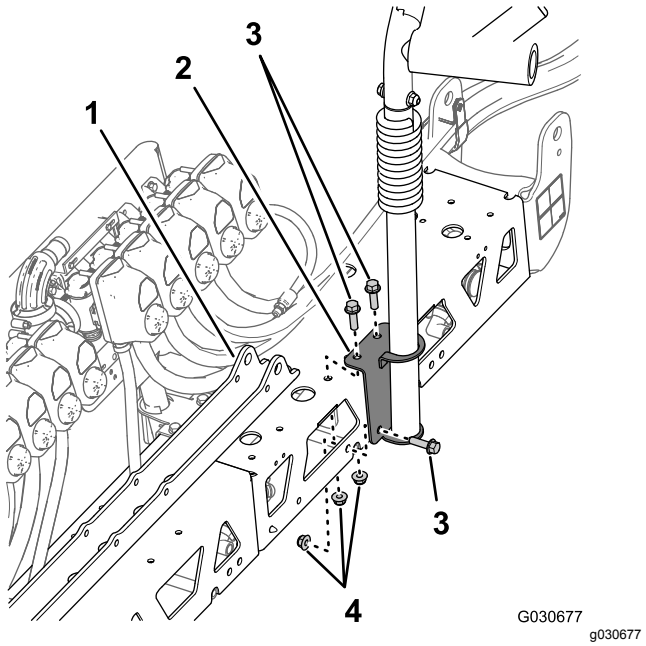

Figure 122

1. Cylinder mount
2. Mounting bracket (right cradle assembly)
3. Flange-head bolt (3/8 x 1-1/4 inches)
4. Flange locknuts

2. Assemble the right boom cradle to the center boom section with the 3 flange-head bolt (3/8 x 1-1/4 inches) and flange locknuts that you removed in step 3 in Removing the Boom Cradle (page 36).
3. Torque the bolts and nuts to 37 to 45 N·m (27 to 33 ft-lb).
4. Align the holes in the mounting bracket of the new left lower boom cradle with the holes at the top and front sides (to the left of the manifold mount) of the new center boom section (Figure 123).

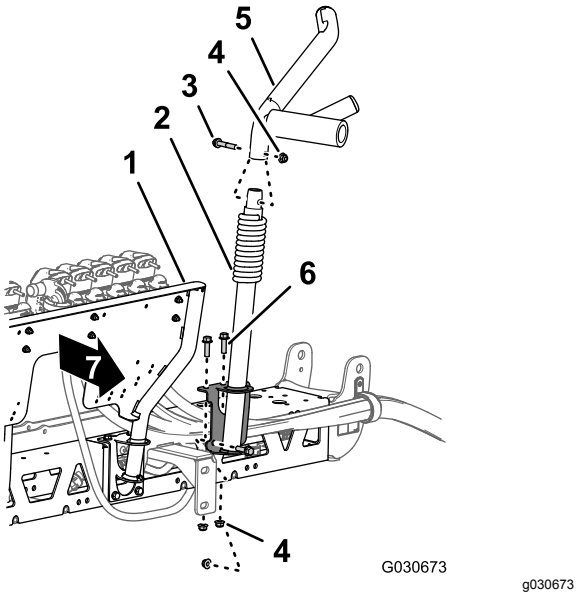

Figure 123

1. Manifold mount—10-sprayer-valve system
2. Lower cradle assembly
3. Flange-head bolt (3/8 x 2 inches)
4. Flange locknut (3/8 inch)
5. Upper cradle assembly
6. Flange-head bolt (3/8 x 1-1/4 inches)
7. Front of the new center boom section

5. Assemble the boom cradle to the center boom section with the 3 flange-head bolts and 3 flange locknuts that you removed in step 2 in Removing the Boom Cradle (page 36).
6. At the left lower cradle, assemble the upper cradle that you removed in step 1 in Removing the Boom Cradle (page 36) onto the lower cradle (Figure 123) with the flange-head bolt (3/8 x 2 inches) and flange locknut (3/8 inch).
7. Assemble the upper, left boom cradle that you removed in step 1 in Removing the Boom Cradle (page 36) onto the lower cradle with the 3 flange-head bolt (3/8 x 1-1/4 inches) and flange locknut (3/8 inch).
8. Torque the bolts and nuts to 37 to 45 N·m (27 to 33 ft-lb).

23

Installing the New Center Boom Section

No Parts Required

Procedure

Lifting equipment capacity: 102 kg (225 lb)

1. Using lifting equipment with the specified lift capacity, raise the center boom section and align the holes in the support bracket for the boom section with the third and sixth holes in the mounting channel for the sprayer frame (Figure 104).

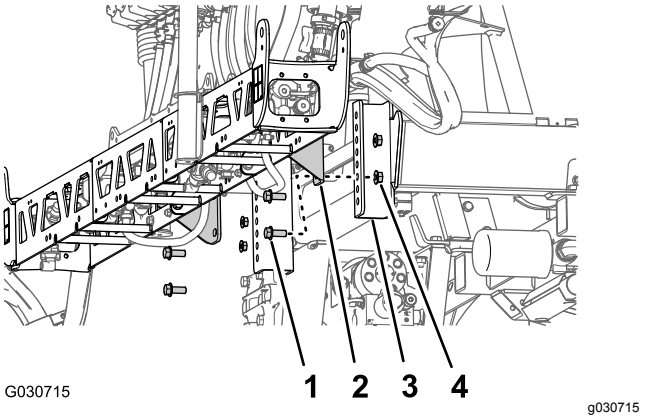

Figure 124

1. Flange-head bolt (1/2 x 1-1/4 inches)
2. Support bracket (center boom section—10-valve system)
3. Mounting channel (sprayer frame)
4. Flange locknut (1/2 inch)

2. Assemble the center boom section to the mounting channels with the 4 flange-head bolts (1/2 x 1-1/4 inches) and 4 flange locknut (1/2 inch) that you removed in step 3 in Removing the Center Boom Section (page 38).
3. Torque the nuts and bolts to 91 to 113 N·m (67 to 83 ft-lb).

24

Installing the Flow Meter and Pressure Transducer

Parts needed for this procedure:

1	Flow meter
2	Flange clamp 76 mm (3 inches)
2	Gasket (2-1/4 inches outside diameter)
2	Reducer adapter
1	Flange clamp 51 mm (2 inches)
1	Gasket (1-5/16 inches outside diameter)
1	Barbed-flange fitting (1 inch)
1	Hose (1 x 7-1/4 inches)
4	Hose clamp
1	Pressure transducer and manifold
1	Hose (1 x 8-1/2 inches)
1	R-clamp
1	Flange-head bolt (5/16 x 3/4 inch)
1	Flange locknut (5/16 inch)

Assembling the Flow Meter and Pressure Transducer

1. Align the gasket (2-1/4 inches) and reducer adapter to the end of the flow meter to which the directional points (Figure 125).

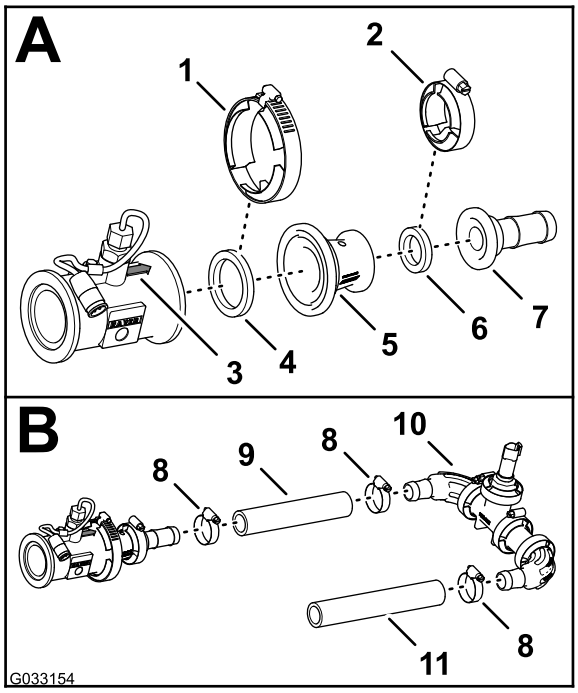

g033154

Figure 125

1. Flange clamp 76 mm (3 inches)
2. Flange clamp 51 mm (2 inches)
3. Directional arrow (flow meter)
4. Gasket (2-1/4 inches outside diameter)
5. Reducer adapter
6. Gasket (1-5/16 inches outside diameter)
7. Barbed-flange fitting (1 inch)
8. Hose clamp
9. Hose (1 x 7-1/4 inches)
10. Pressure transducer and manifold
11. Hose (1 x 8-1/2 inches)

2. Secure the flow meter, gasket, and reducer adapter (Figure 125) with a flange clamp 76 mm (3 inches).
3. Align the gasket (2-1/4 inches) and barbed hose fitting to the end of the reducer adapter (Figure 125).
4. Secure the barbed-flange fitting, gasket, and reducer adapter (Figure 125) with a flange clamp 51 mm (2 inches).
5. Assemble the hose (1 x 7-1/4 inches) onto the barbed-flange fitting and the barbed elbow fitting of the pressure transducer and manifold as shown in Figure 125.
6. Secure the hose and barbed fittings with 2 hose clamps (Figure 125).
7. Assemble the hose (1 x 8-1/2 inches) onto the other barbed elbow-fitting of the pressure transducer and manifold as shown in Figure 125.
8. Secure the hose and barbed fitting with a hose clamp (Figure 125).

Installing the Flow Meter and Pressure Transducer onto the Machine

1. Align the gasket (2-1/4 inches) between the flow meter and the reducer adapter that is installed at the right side of the master control valve (Figure 126).

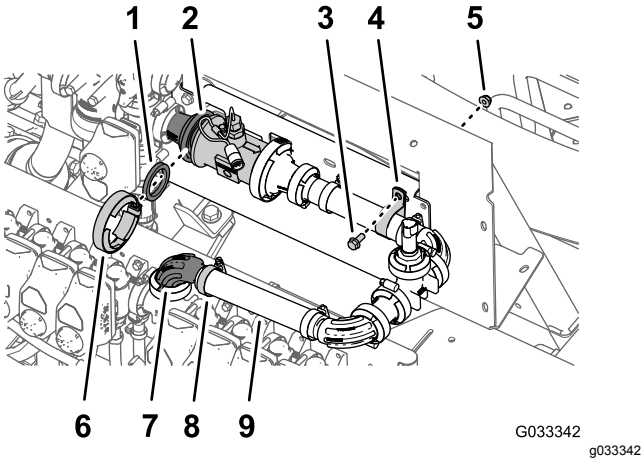

Figure 126

1. Gasket (2-1/4 inch outside diameter)
2. Reducer adapter and flow-meter flanges
3. Flange-head bolt (5/16 x 3/4 inch)
4. R-clamp
5. Flange locknut (5/16 inch)
6. Flange clamp 76 mm (3 inches)
7. 90° flange fitting (1 inch)
8. Hose clamp
9. Hose (1 x 8-1/2 inches)

2. Loosely assemble the gasket, flow meter, and reducer adapter (Figure 126) with a flange clamp 76 mm (3 inches).
3. Loosely assemble the free end of the hose (1 x 8-1/2 inches) over the 90° flange fitting (1 inch) with a hose clamp (Figure 126).
4. Secure the pressure transducer and manifold to the manifold mount with a R-clamp, flange-head bolt (5/16 x 3/4 inch), and flange locknut (5/16 inch) as shown in Figure 126.
5. Tighten the flange clamp and hose clamp that you assembled in steps 2 and 4.

25

Assembling the Boom-Lift Cylinders

Parts needed for this procedure:

4	Hydraulic hose (1/4 x 24-3/4 inches)

Assembling the Boom-Lift Manifold

1. Align the holes in the support bracket for the boom-lift manifold that you removed in step 3 of Removing the Lift Cylinder Manifold and Support Bracket (page 36) with the cylinder mount of the new center boom section (Figure 127).

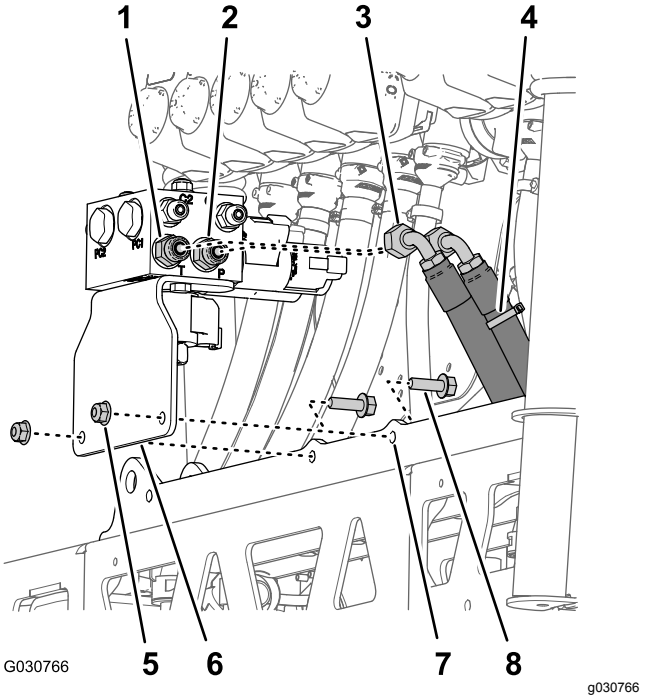

Figure 127

1. Straight fitting (port T)
2. Straight fitting (port P)
3. Hydraulic-return hose
4. Hydraulic-pressure hose (marked with a cable tie)
5. Flange locknut (5/16 inch)
6. Support bracket and boom-lift manifold
7. Cylinder mount
8. Flange-head bolt (5/16 x 1 inch)

2. Assemble the support bracket to the cylinder mount (Figure 127) with the 2 flange-head bolts (5/16 x 1 inch) and flange locknuts (5/16 inch) that you removed in step 3 of Removing the Lift Cylinder Manifold and Support Bracket (page 36).

3. Torque the nuts and bolts to 1978 to 2542 N·cm (175 to 225 in-lb).
4. Assemble the hydraulic-pressure hose (marked with a cable tie) onto port P of the boom-lift manifold (Figure 127).
5. Assemble the hydraulic-return hose onto port T of the boom-lift manifold (Figure 127).
6. Torque the swivel nuts of the hoses to 37 to 45 N·m (27 to 33 ft-lb).

Assembling the Lift Cylinders

1. Align the fixed end of the lift cylinder that you removed in step 4 of Removing the Lift Cylinders (page 34) to the 16 mm (5/8 inch) hole in the cylinder mount (Figure 128).

   Note: Ensure that the extend and retract ports of the cylinder align up.

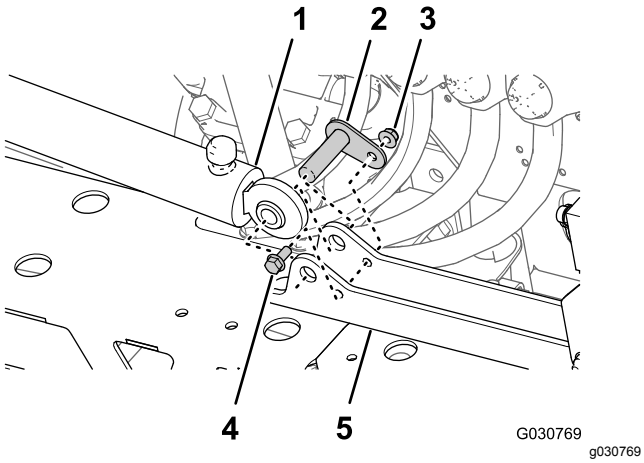

Figure 128

1. Lift cylinder (fixed end))
2. Pivot pin
3. Flange locknut (5/16 inch)
4. Flange-head bolt (5/16 x 3/4 inch)
5. Cylinder mount

2. Assemble the cylinder to the cylinder mount with the pivot pin, flanged-head bolt, and flange nut (Figure 128).
3. Torque the bolt and nut to 1978 to 2542 N·cm (175 to 225 in-lb).
4. Repeat steps 1 through 3 for the other lift cylinder at the other side of the cylinder mount.

Installing the Lift-Cylinder Hoses

1. Loosely assemble a new hydraulic hose (1/4 x 24-3/4 inches) between the extend port of the left boom-lift cylinder and port C3 of the boom-lift manifold (Figure 129).

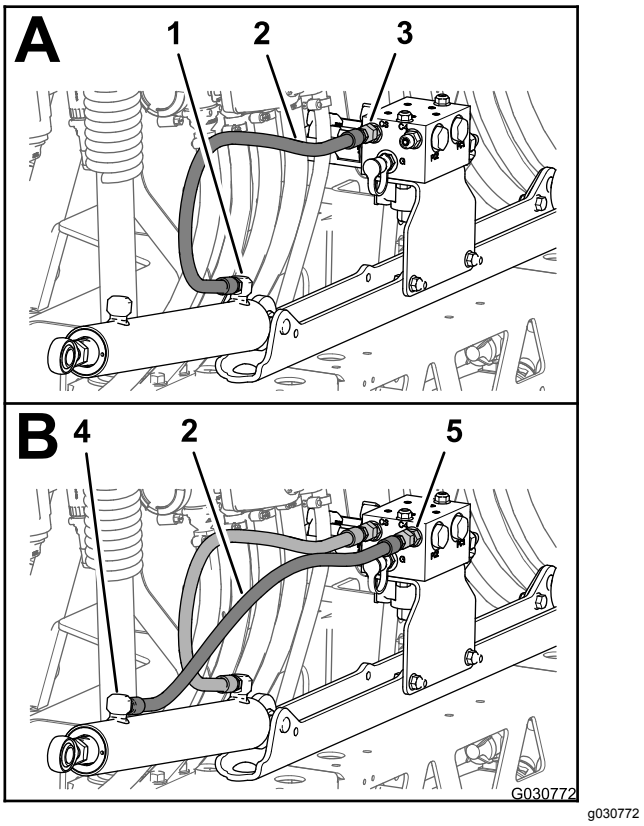

Figure 129

1. Extend port (left boom-lift cylinder)
2. Hydraulic hose (1/4 x 24-3/4 inches)
3. Port C3 (boom-lift manifold)
4. Retract port (left boom-lift cylinder)
5. Port C4 (boom-lift manifold)

2. Loosely assemble a new hydraulic hose (1/4 x 24-3/4 inches) between the retract port of the left boom-lift cylinder and port C4 of the boom-lift manifold (Figure 129).
3. Loosely assemble a new hydraulic hose (1/4 x 24-3/4 inches) between the extend port of the right boom-lift cylinder and port C1 of the boom-lift manifold (Figure 130).

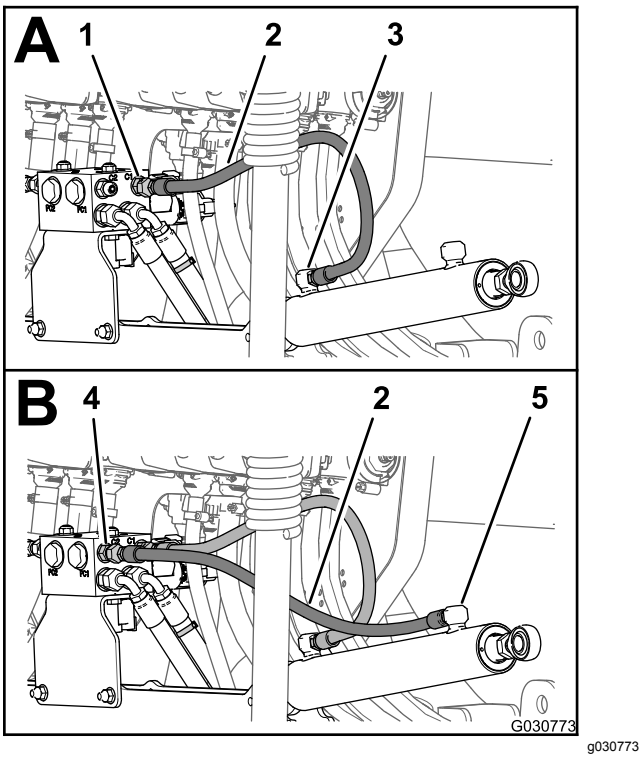

Figure 130

1. Port C1 (boom-lift manifold)
2. Hydraulic hose (1/4 x 24-3/4 inches)
3. Extend port (right boom-lift cylinder)
4. Port C2 (boom-lift manifold)
5. Retract port (right boom-lift cylinder)

4. Loosely assemble a new hydraulic hose (1/4 x 24-3/4 inches) between the retract port of the right boom-lift cylinder and port C2 of the boom-lift manifold (Figure 130).
5. Torque the hose fittings at the extend and retract ports of the lift cylinders (Figure 129 and Figure 130) to 21 to 26 N·m (15 to 19 ft-lb).
6. Torque the swivel nuts of the hoses at the boom-lift manifold (Figure 129 and Figure 130) to 24 to 30 N·m (17 to 22 ft-lb).

26

Installing the Outer Boom Sections

Parts needed for this procedure:

4	Nylon-flange bushing

Installing the Bumpers

1. Align the threaded stud of the bumper that you removed in step 4 of Removing the Boom Cradle (page 36) through the middle hole at the end of the top plate of the center boom section (Figure 131).

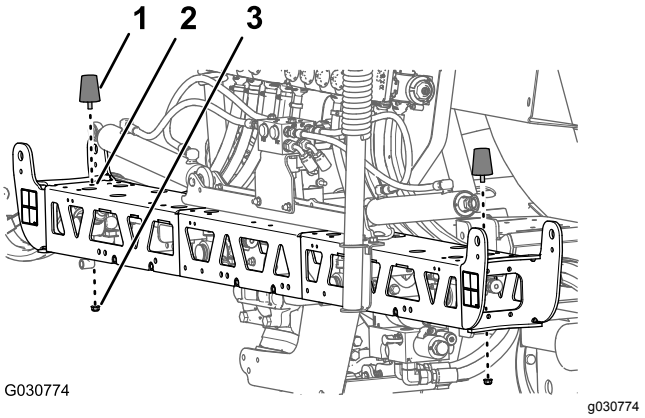

Figure 131

1. Bumper
2. Middle vertical hole (front to back)—at the end top plate of the center boom section
3. Flange locknut (5/16 inch)

2. Secure the bumper to the center boom section with the flange locknuts (5/16 inch) that you removed in 4 of Removing the Boom Cradle (page 36).

Removing the Sprayer Nozzles from the Outer Boom Sections

1. Cut the hose between 2 sprayer nozzles (Figure 132).

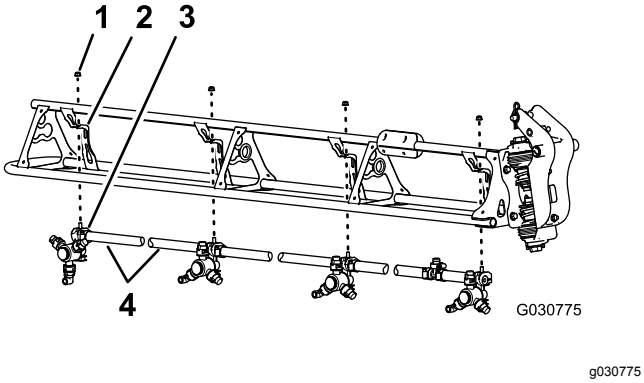

Figure 132

1. Flange locknut (5/16 inch)
2. Nozzle support
3. Sprayer nozzle
4. Hose (3/4 inch inside diameter)

2. Remove the flange locknut (5/16 inch) that secures the sprayer nozzle to the nozzle support (Figure 132).
3. Repeat steps 2 and 1 for the other 3 nozzles.

   Note: Retain the flange locknut and sprayer nozzle for installation in Installing the Sprayer Nozzles at the Outer Boom Sections (page 66).

   Note: Discard the hoses, clamps and T-fitting that you removed from the machine.
4. Repeat steps 2 through 3 at the other outer boom section.
5. Working with the 8 sprayer nozzles that you removed in step 1, remove the stainless steel screws (#12 x 1-1/4 inches) that secures the upper clamp halves and the double or single barbed-hose shanks (3/4 inch) to the body of each of the sprayer nozzle, and remove the barbed-hose shanks (Figure 133).

   Note: The hex-head bolt (5/16 x 3/4 inch—stainless steel) separates from the upper clamp half when you open the clamp; retain the bolt for installation.

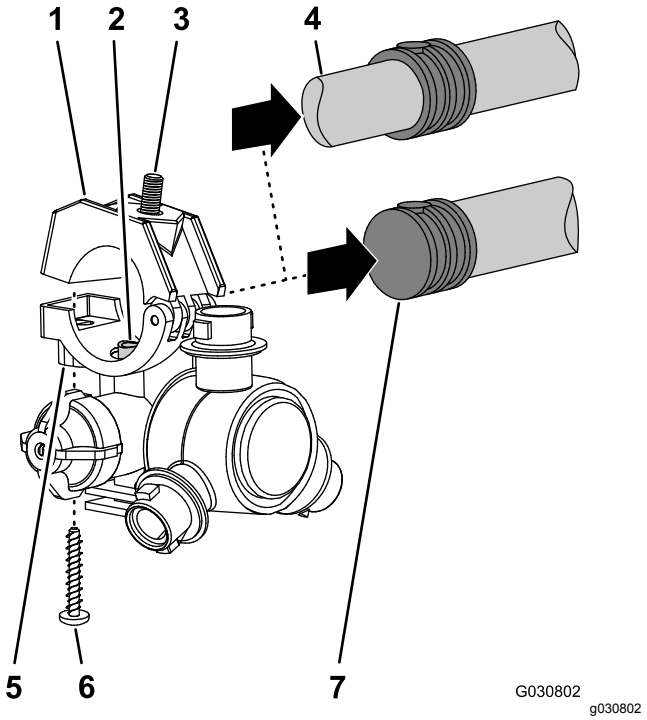

Figure 133

1. Upper clamp half
2. Transfer tube
3. Hex-head bolt (5/16 x 3/4 inch—stainless steel)
4. Double barbed-hose shank (3/4 inch hose)
5. Sprayer-nozzle body
6. Stainless steel screw (#12 x 1-1/4 inches)
7. Single barbed-hose shank (3/4 inch hose)

Assembling the Outer Boom Sections to the Machine

Lift equipment capacity: 91 kg (200 lb)

1. Using lift equipment with the specified capacity, raise the outer boom.
2. Insert a nylon-flange bushings into the 31.8 mm (1-1/4 inches) hole in each side of the pivot fitting (Figure 134).

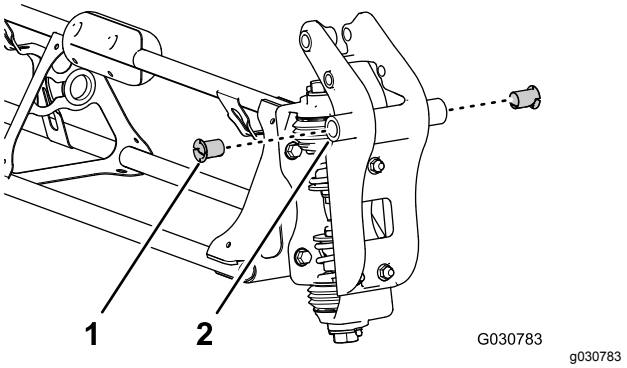

Figure 134

1. Nylon-flange bushing
2. Pivot fitting (outer boom section)

3. Align the busings in the pivot fitting with the holes in the flanges of the pivot bracket at the end of the center boom section (Figure 135).

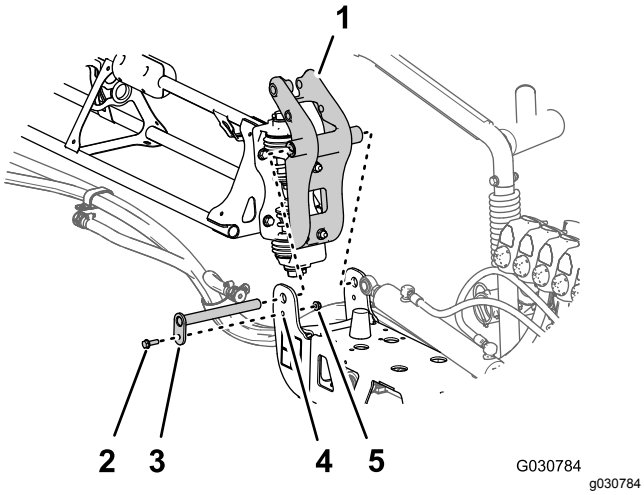

Figure 135

1. Pivot fitting (outer boom section)
2. Flange bolt (5/16 x 1 inch)
3. Pivot pin
4. Pivot bracket (center boom section)
5. Flange locknut (5/16 inch)

4. Assemble the pivot fitting to the pivot bracket with the pivot pin, flange bolt (5/16 x 1 inch), and flange locknut (5/16 inch) that you removed in step 1 and 2 of 16 Removing the Boom Sections (page 34).
5. Torque the bolt and nut to 1978 to 2542 N·cm (175 to 225 in-lb).
6. Align the rod end of the lift cylinder with the hole 25 mm (1 inch) in the horn of the pivot fitting (Figure 136).

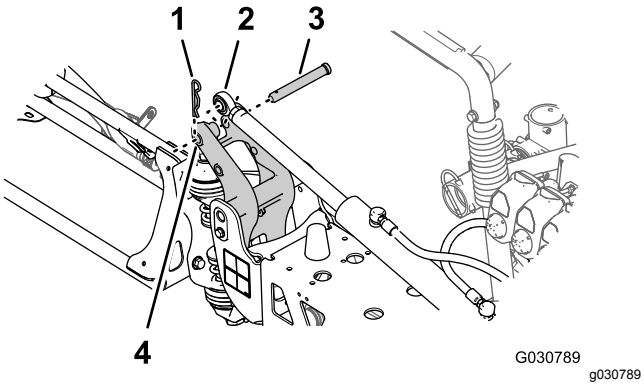

Figure 136

1. Hairpin
2. Rod end (lift cylinder)
3. Clevis pin
4. 25 mm (1 inch) hole—horn of the pivot-fitting

7. Secure the lift cylinder to the pivot fitting with the clevis pin and hairpin (Figure 136) that you removed in step 3 of Removing the Lift Cylinders (page 34).
8. Repeat steps 1 through 7 at the outer boom section at the other side of the machine.

27

Installing the Sprayer-Nozzle Hoses

Parts needed for this procedure:

2	Supply hose—279 cm (110 inches)
2	Supply hose—234 cm (92 inches)
4	Supply hose—188 cm (74 inches)
2	Supply hose—81 cm (32 inches)

Identifying the Sprayer-Nozzle Hose Positions

Identify the supply hoses by length (Figure 137) for each of the sprayer-nozzle position as follows:

Sprayer nozzle hose-position table

Sprayer-nozzle positions—left boom section	Sprayer-nozzle positions—center boom section	Sprayer-nozzle positions—right boom section
Sprayer nozzle 1 (nozzle valve 1)—supply hose 279 cm (110 inches)	Sprayer nozzles 5 and 6 (nozzle valve 5)—supply hose 81 cm (32 inches) with 2 branch hoses	Sprayer nozzle 9 (nozzle valve 7)—supply hose 188 cm (74 inches)
Sprayer nozzle 2 (nozzle valve 2)—supply hose 234 cm (92 inches)	Sprayer nozzles 7 and 8 (nozzle valve 6)—supply hose 81 cm (32 inches) with 2 branch hoses	Sprayer nozzle 10 (nozzle valve 8)—supply hose 188 cm (74 inches)
Sprayer nozzle 3 (nozzle valve 3)—supply hose 188 cm (74 inches)		Sprayer nozzle 11 (nozzle valve 9)—supply hose 234 cm (92 inches)
Sprayer nozzle 4 (nozzle valve 4)—supply hose 188 cm (74 inches)		Sprayer nozzle 12 (nozzle valve 10)—supply hose 279 cm (110 inches)

Note: Refer to Figure 138 in Assembling the Hoses to Nozzle Valves 1 through 4 (page 64), Figure 139 in Assembling the Hoses to Nozzle Valves 5 and 6 (page 64), and Figure 140 in Assembling the Hoses to Nozzle Valves 7 through 10 (page 65) for the nozzle-valve positions.

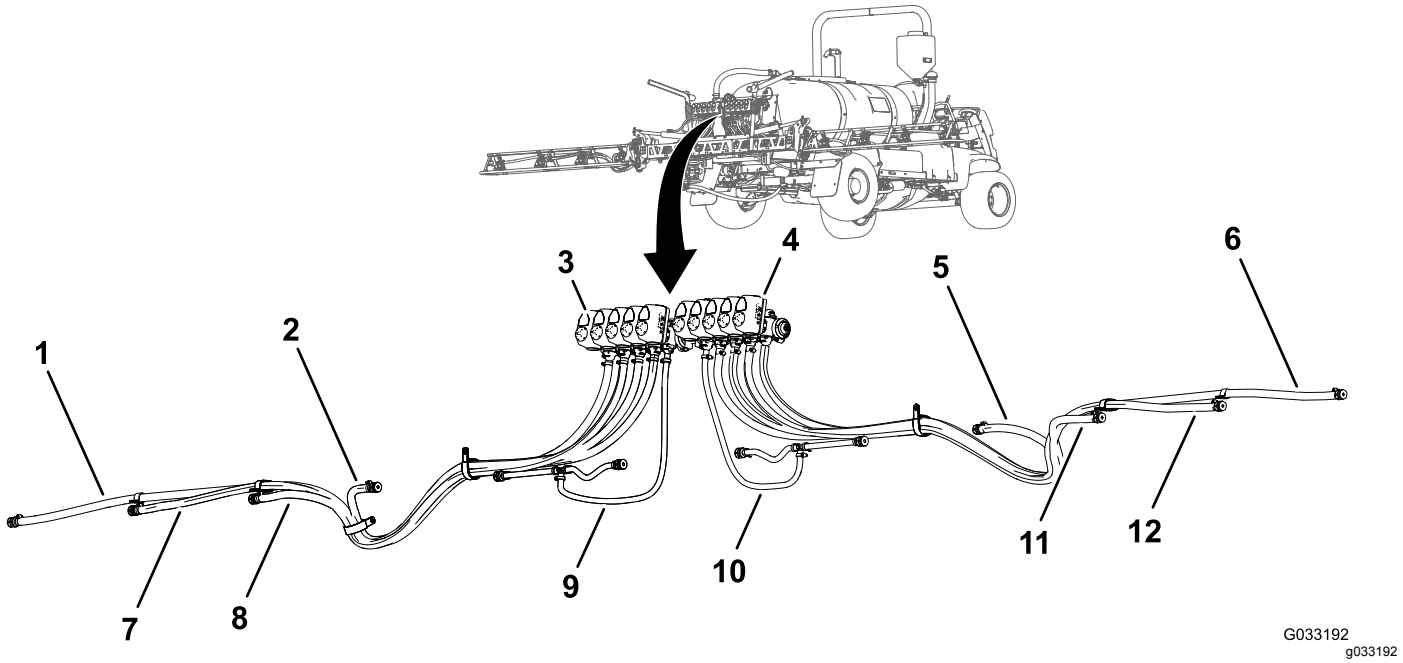

Figure 137

1. Supply hose 279 cm (110 inches)—sprayer nozzle 1
2. Supply hose 188 cm (74 inches)—sprayer nozzle 4
3. Nozzle valve 1
4. Nozzle valve 10
5. Supply hose 188 cm (74 inches)—sprayer nozzle 9
6. Supply hose 279 cm (110 inches)—sprayer nozzle 12
7. Supply hose 234 cm (92 inches)—sprayer nozzle 2
8. Supply hose 188 cm (74 inches)—sprayer nozzle 3
9. Supply hose 81 cm (32 inches)—sprayer nozzle 5 and 6
10. Supply hose 81 cm (32 inches)—sprayer nozzle 7 and 8
11. Supply hose 188 cm (74 inches)—sprayer nozzle 10
12. Supply hose 234 cm (92 inches)—sprayer nozzle 11

Assembling the Hoses to Nozzle Valves 1 through 4

1. Assemble the straight barbed fitting of a supply hose 279 cm (110 inches) onto the coupler of nozzle valve 1 (Figure 138).

   Note: Ensure that the barbed fitting fully seats onto the coupler.

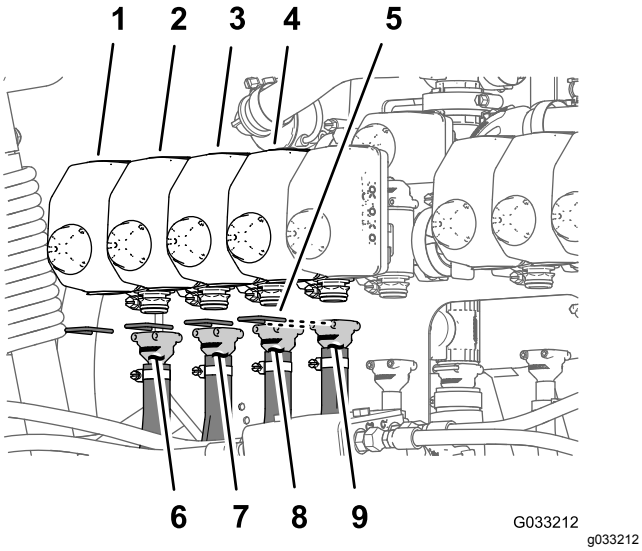

Figure 138

1. Nozzle valve 1
2. Nozzle valve 2
3. Nozzle valve 3
4. Nozzle valve 4
5. Retainer
6. Supply hose—279 cm (110 inches)
7. Supply hose—234 cm (92 inches)
8. Supply hose—188 cm (74 inches)
9. Supply hose—188 cm (74 inches)

2. Secure the barbed fitting to the coupler with a retainer (Figure 138).
3. Assemble the straight barbed fitting of a supply hose 234 cm (92 inches) onto the coupler of nozzle valve 2 (Figure 138).

   Note: Ensure that the barbed fitting fully seats onto the coupler.
4. Secure the barbed fitting to the coupler with a retainer (Figure 138).
5. Assemble the straight barbed fitting of a supply hose 188 cm (74 inches) onto the coupler of nozzle valve 3 (Figure 138).

   Note: Ensure that the barbed fitting fully seats onto the coupler.
6. Secure the barbed fitting to the coupler with a retainer (Figure 138).
7. Assemble the straight barbed fitting of a supply hose 188 cm (74 inches) onto the coupler of nozzle valve 4 (Figure 138).

   Note: Ensure that the barbed fitting fully seats onto the coupler.
8. Secure the barbed fitting to the coupler with a retainer (Figure 138).

Assembling the Hoses to Nozzle Valves 5 and 6

Note: Supply-hose assembly 81 cm (32 inches) has a T-fitting with 2 branch hoses and 2 single barbed-hose shanks.

1. Assemble the straight barbed fitting of a supply hose 81 cm (32 inches) onto the coupler of nozzle valve 5 (Figure 139).

   Note: Ensure that the barbed fitting fully seats onto the coupler.

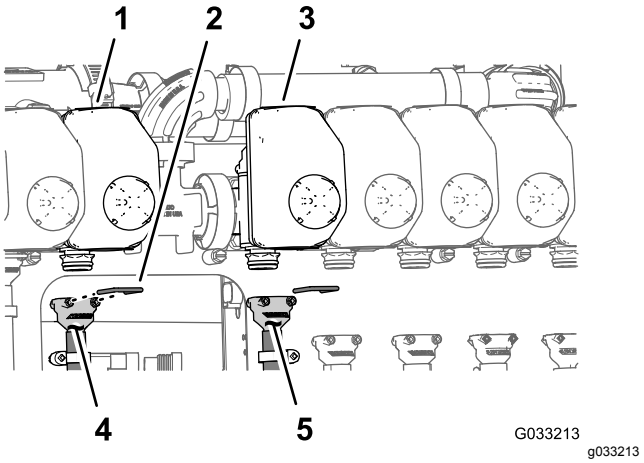

Figure 139

1. Nozzle valve 5
2. Retainer
3. Nozzle valve 6
4. Supply hose—81 cm (32 inches)
5. Supply hose—81 cm (32 inches)

2. Secure the barbed fitting to the coupler with a retainer (Figure 139).
3. Assemble the straight barbed fitting of a supply hose 81 cm (32 inches) onto the coupler of nozzle valve 6 (Figure 139).

   Note: Ensure that the barbed fitting is fully seats onto the coupler.
4. Secure the barbed fitting to the coupler with a retainer (Figure 139).

Assembling the Hoses to Nozzle Valves 7 through 10

1. Assemble the straight barbed fitting of a supply hose 188 cm (74 inches) onto the coupler of nozzle valve 7 (Figure 140).

   Note: Ensure that the barbed fitting fully seats onto the coupler.

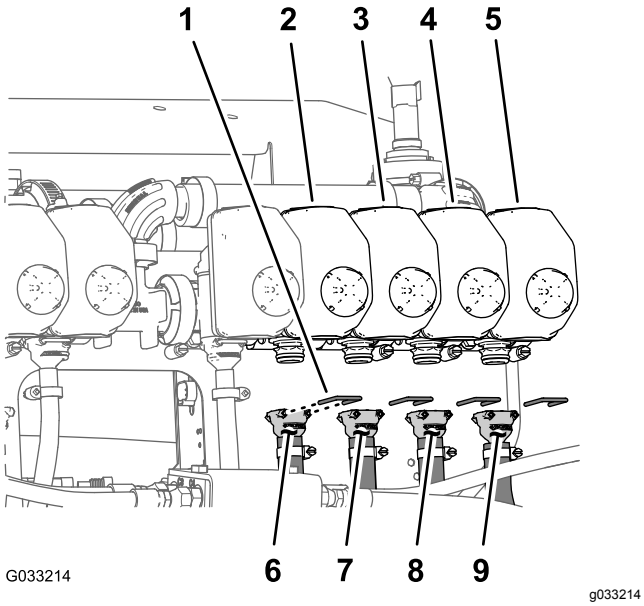

Figure 140

1. Retainer
2. Nozzle valve 7
3. Nozzle valve 8
4. Nozzle valve 9
5. Nozzle valve 10
6. Supply hose—188 cm (74 inches)
7. Supply hose—188 cm (74 inches)
8. Supply hose—234 cm (92 inches)
9. Supply hose—279 cm (110 inches)

2. Secure the barbed fitting to the coupler with a retainer (Figure 140).
3. Assemble the straight barbed fitting of a supply hose 188 cm (74 inches) onto the coupler of nozzle valve 8 (Figure 140).

   Note: Ensure that the barbed fitting fully seats onto the coupler.

4. Secure the barbed fitting to the coupler with a retainer (Figure 140).
5. Assemble the straight barbed fitting of a supply hose 234 cm (92 inches) onto the coupler of nozzle valve 9 (Figure 140).

   Note: Ensure that the barbed fitting fully seats onto the coupler.

6. Secure the barbed fitting to the coupler with a retainer (Figure 140).
7. Assemble the straight barbed fitting of a supply hose 279 cm (110 inches) onto the coupler of nozzle valve 10 (Figure 140).

   Note: Ensure that the barbed fitting fully seats onto the coupler.

8. Secure the barbed fitting to the coupler with a retainer (Figure 140).

Routing the Supply Hoses to the Sprayer Nozzles

1. Route the hoses for sprayer nozzles 1, 2, 3, and 4 through the R-clamp at the left outboard end of the center boom section (Figure 141 and Figure 142).

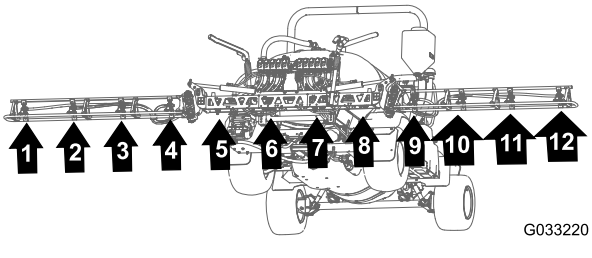

Figure 141

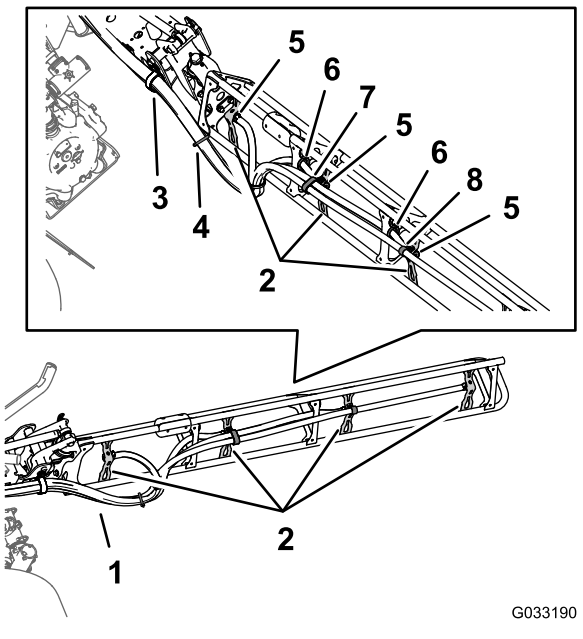

Figure 142

1. Hoses
2. Nozzle supports
3. R-clamp
4. Cable tie
5. Single barbed-hose shank (1/2 inch)
6. Grommet
7. Double R-clamp
8. Single R-clamp

2. Route the hoses for sprayer nozzles 7, 8, 9, and 10 through the R-clamp at the right outboard

end of the center boom section (Figure 141 and Figure 142).

3. Route the supply hoses 279 cm (110 inches) and barbed-hose shanks (3/4 inch) along the boom section to sprayer nozzles 1 and 10 as shown in (Figure 141 and Figure 142).
4. Route the supply hoses 234 cm (92 inches) and barbed-hose shanks (3/4 inch) along the boom section to sprayer nozzles 2 and 9 along the boom section as shown in Figure 141 and Figure 142.
5. Route the supply hoses 188 cm (74 inches) and barbed-hose shanks (3/4 inch) along the boom section to sprayer nozzles 3 and 8 as shown in Figure 141 and Figure 142.

   Note: Route the hoses through the lower rear grommets in the tube-frame brackets.
6. Route the supply hoses 188 cm (74 inches) and barbed-hose shanks (3/4 inch) along the boom section to sprayer nozzles 4 and 7 as shown in Figure 141 and Figure 142.

   Note: Route the hoses through the lower rear grommets in the tube-frame brackets.
7. Bundle the 4 hoses for the sprayer nozzles together with a cable tie as shown in Figure 142.

Installing the Sprayer Nozzles at the Outer Boom Sections

1. Align the transfer tube in the saddle of a sprayer nozzle (Figure 143) with the hole in the side of the single barbed-hose shank (1/2 inch).

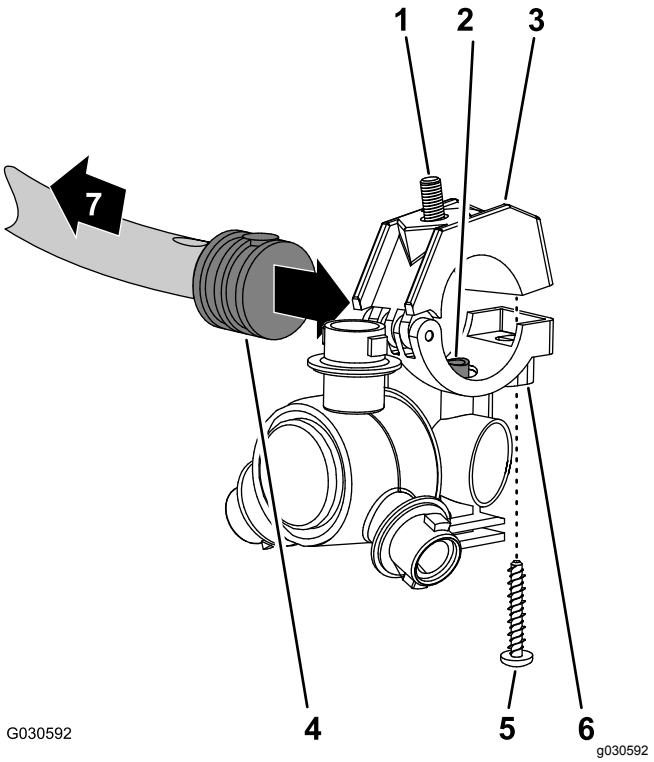

Figure 143

1. Hex-head bolt (5/16 x 3/4 inch—stainless steel)
2. Transfer tube
3. Upper clamp half
4. Single barbed-hose shank (1/2 inch)
5. Stainless steel screw (#12 x 1-1/4 inches)
6. Sprayer nozzle body
7. Toward the boom section

2. Close the upper clamp half around the barbed-hose shank and secure the clamp half and spray nozzle body (Figure 143) with the stainless steel screw (#12 x 1-1/4 inches); torque the stainless steel screw to 14 to 18 N·m (20 to 25 in-lb).

   Note: Ensure that the hex-head bolt (5/16 x 3/4 inch) is seated in the recess in the upper clamp half when closing the clamp.
3. Assemble the sprayer nozzles to the outer boom section as follows:
   - At the nozzle positions 1 and 4, assemble the sprayer nozzle to the nozzle mount (A of Figure 144) with the flange locknut (5/16 inch) that you removed in step 2 of Removing the Sprayer Nozzles from the Outer Boom Sections (page 61).
   - At the nozzle positions 2 and 3, assemble the sprayer nozzle to the nozzle mount (A and B of Figure 144) with the flange locknut (5/16 inch) that you removed in step 2 of Installing the Sprayer Nozzles at the Outer Boom Sections (page 66).

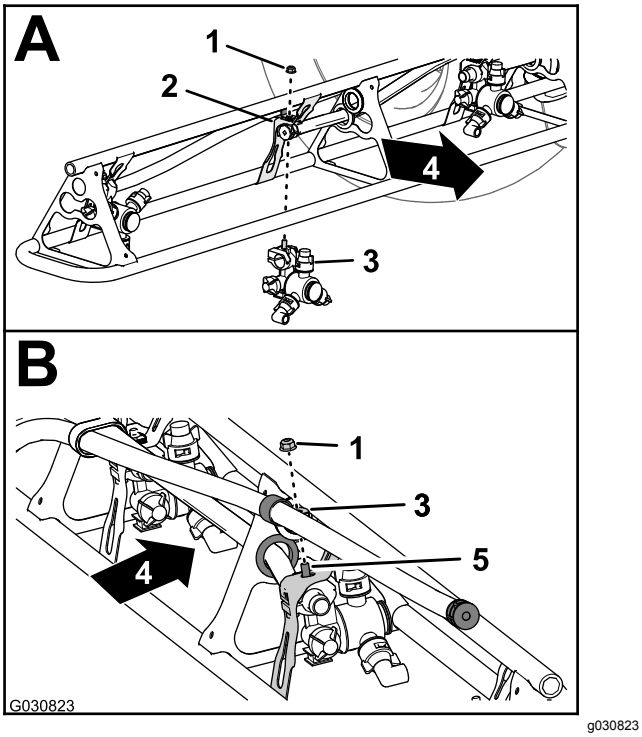

Figure 144

1. Flange locknut (5/16 inch)
2. Nozzle mount
3. Sprayer nozzle
4. Back of the machine
5. Hex-head bolt (stainless steel—5/16 x 3/4 inch)

4. Torque the flange locknut to 1978 to 2542 N·cm (175 to 225 in-lb).
5. Repeat steps 1 through 4 for the other sprayer nozzles for the boom section.
6. Repeat steps 1 through 5 to the outer boom section at the other side of the machine.

28

Connecting the Pressure-Sense Tube for the Dash Gauge

No Parts Required

Connecting the Pressure-Sense Tube for the Dash Gauge

Machines without an Optional Hose Reel Kit

1. Align the end of the pressure-sense tube (plastic) for the pressure gauge in the dash with the locking collar for the tube coupler (Figure 145).

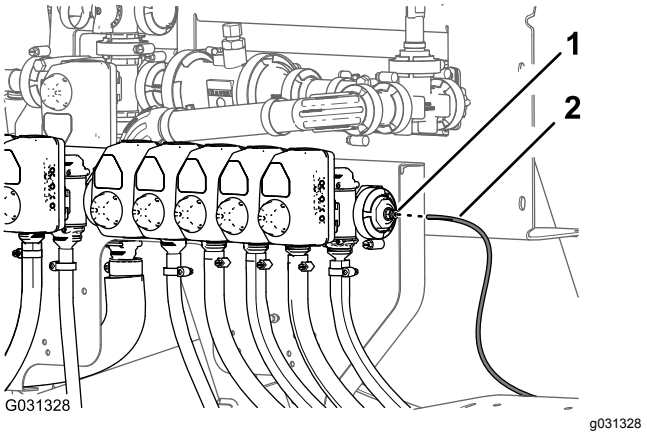

Figure 145

1. Locking collar (tube coupler)
2. Pressure-sense tube (dash-pressure gauge)

2. Insert the sense tube into the locking collar until the tube fully seats (Figure 145).

Connecting the Pressure Sense-Tube

Optional Spray Gun Kit or Optional Pivoting Hose Reel Kit

1. Align the end of the pressure-sense tube (plastic) for the pressure gauge in the dash with the locking collar for the tube coupler (Figure 146 and Figure 147).

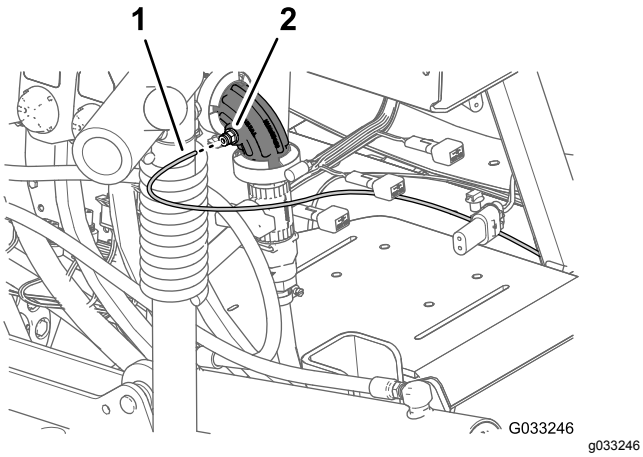

Figure 146

Optional Spray Gun Kit

1. Pressure-sense tube (dash gauge)
2. Tube coupler (90° elbow—nozzle valve 10)

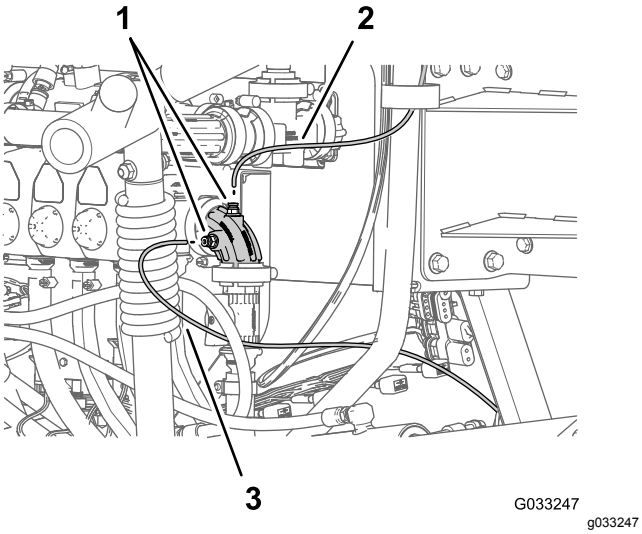

Figure 147

Optional Pivoting Hose Reel Kit

1. Pressure-sense tube (pivoting-reel gauge)
2. Tube couplers (90° elbow—nozzle valve 10)
3. Pressure-sense tube (dash gauge)

2. Insert the sense tube into the locking collar until the tube fully seats (Figure 146 and Figure 147).

29

Installing the Navigation Receiver

Parts needed for this procedure:

1	Navigation receiver—GeoLink precision spray system kit (Model 41623)
1	Receiver mount
2	U-bolt
1	RTK-antenna bracket (optional CDMA RTK correction modem kit or GSM RTK correction modem kit)
4	Flange locknut (3/8 inch)
3	Hex-head bolt (5 x 16 mm)
3	Washer (5 mm)
1	Cellular antenna (optional CDMA RTK correction modem kit or GSM RTK correction modem kit)
1	Coaxial cable (optional CDMA RTK correction modem kit or GSM RTK correction modem kit)
1	Serial label (part of the X25 or the X30 GeoLink Precision Spray System Kits)

Assembling the Navigation Receiver to the Machine

1. Align the slot that is in the center of the receiver mount with the weld seam at the centerline of the ROPS tube (Figure 148).

   Note: Ensure that the larger flange with 2 holes is rearward of the ROPS tube and the smaller flange with 1 hole is forward.

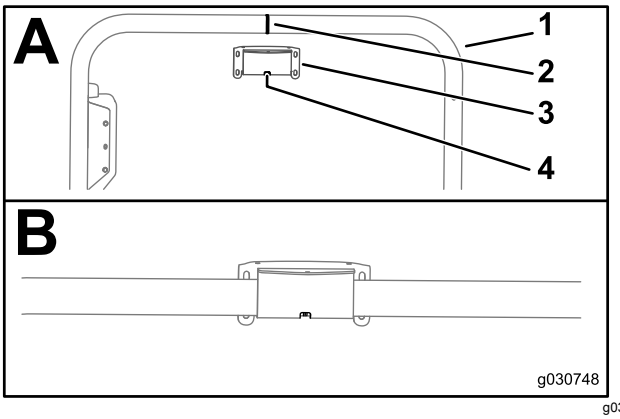

Figure 148

1. ROPS Tube
2. Weld seam (ROPS tube)
3. Receiver mount
4. Slot

2. Assemble the receiver mount to the ROPS tube as follows:
   - If your machine is configured with global navigation satellite system (GNSS) with wide area augmentation system (WAAS), assemble the receiver mount to the ROPS tube (Figure 149) with the 2 U-bolts and 4 flange locknuts (3/8 inch).

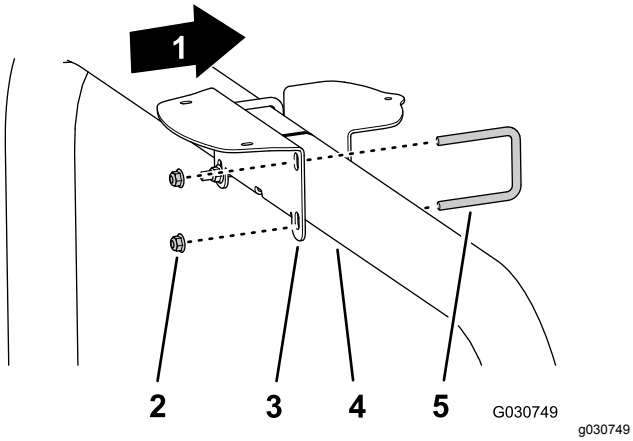

Figure 149

1. Front of the machine
2. Flange locknuts (3/8 inch)
3. Receiver mount
4. ROPS tube
5. U-bolt

   - If your machine has GNSS and the CDMA or GSM RTK correction modem kit, assemble the receiver mount and RTK-antenna bracket to the ROPS tube (Figure 150) with the 2 U-bolts and 4 flange locknuts (3/8 inch).

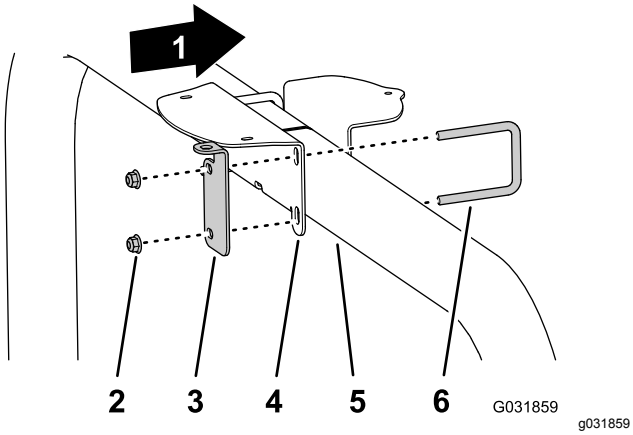

Figure 150

1. Front of the machine
2. Flange locknuts (3/8 inch)
3. RTK-antenna bracket
4. Receiver mount
5. ROPS tube
6. U-bolt

3. Torque the nuts to 37 to 45 N·m (27 to 33 ft-lb).
4. Align the 3 threaded in the base of the navigation receiver to the 3 holes in the receiver mount (Figure 151).

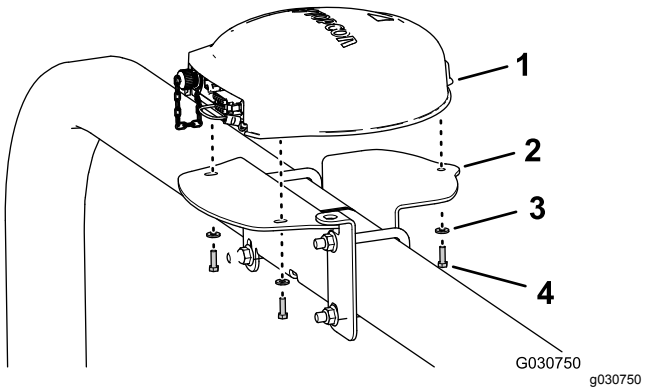

Figure 151

Shown with RTK-antenna bracket; machines with GNSS only are similar

1. Navigation receiver
2. Receiver mount
3. Washers (5 mm)
4. Hex-head bolt (5 x 16 mm)

5. Assemble the receiver to the mount (Figure 151) with the 3 hex-head bolt (5 x 16 mm) and 3 washers (5 mm).
6. Torque the 3 bolts to 576 to 712 N·cm (51 to 63 in-lb).
7. Apply the serial label to the receiver mount (Figure 152).

   Note: The label is part of the X25 or the X30 GeoLink Precision Spray System Kits.

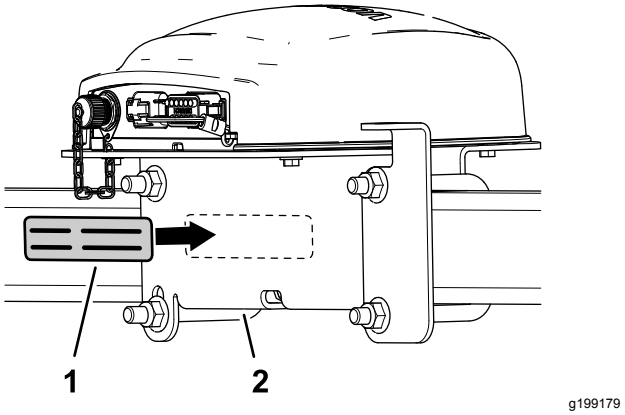

Figure 152

1. Serial label
2. Receiver mount

Installing the RTK Antenna to the Navigation Receiver

Note: Install the RTK antenna when your machine is equipped with a CDMA RTK or GSM RTK correction modem.

1. Align the coaxial coupler through the opening in RTK-antenna bracket with the bulkhead threads of the coupler down (Figure 153).

Note: Rotate the coaxial coupler as needed to align the flat of the bulkhead threads with the flat at the opening in RTK-antenna bracket.

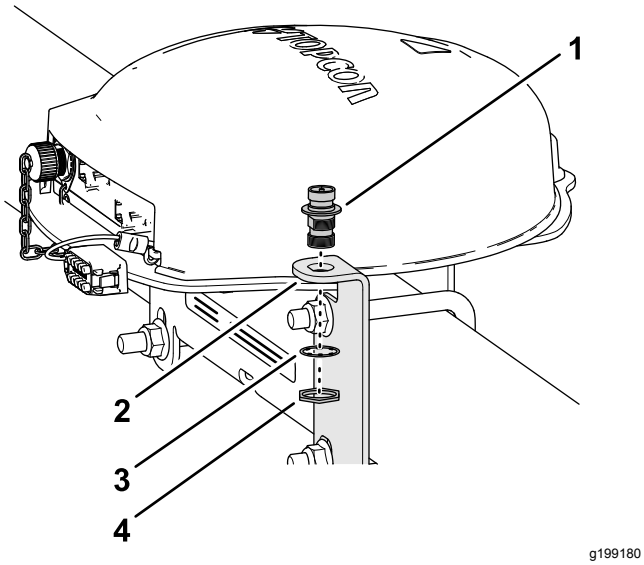

Figure 153

1. Coaxial coupler
2. RTK-antenna bracket
3. Lock washer
4. Jam nut

2. Assemble the coaxial coupler to the antenna bracket with the lock washer and jam nut, and tighten the jam nut by hand (Figure 153).
3. Assemble the RTK antenna onto the upper fitting of the coaxial coupler, and tighten the knurl nut of the antenna by hand (Figure 154).

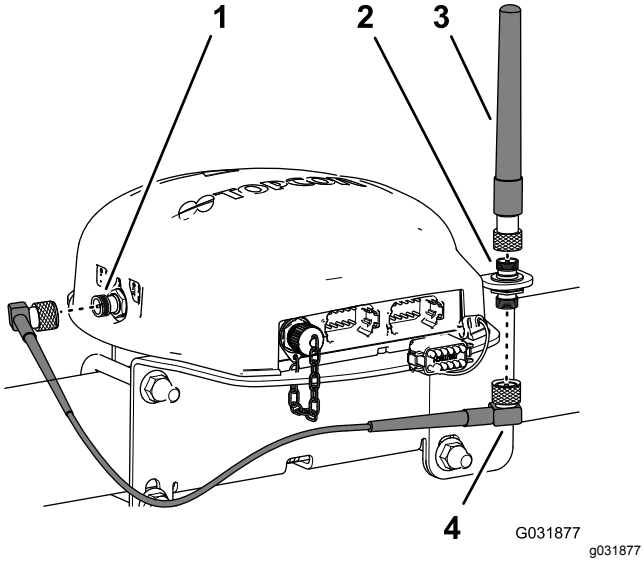

Figure 154

1. Coaxial connector (CDMA or GSM cellular modem)
2. Coaxial coupler
3. RTK-antenna
4. Antenna cable

4. Loosely assemble the antenna cable to the lower fitting of the coaxial coupler (Figure 154).
5. Route the cable around the back of the navigation receiver to the coaxial connector of the CDMA or GSM cellular modem (Figure 154).
6. Assemble the antenna cable to coaxial connector of the CDMA or GSM cellular modem (Figure 154).
7. Tighten the knurl nuts of the antenna cable by hand.

30

Installing the Sprayer Monitor

Parts needed for this procedure:

1	Sprayer Monitor—GeoLink precision spray system kit 41623
1	Display hood
1	Ball mount—GeoLink precision spray system kit 41623
1	Monitor arm—GeoLink precision spray system kit 41623
1	Reinforcement plate
4	Flange-head bolt (1/4 x 1-1/2 inches)
4	Flange locknut (1/4 inch)

Assembling the Display Hood to the Sprayer Monitor

1. At the back of the sprayer monitor and with the 2 connectors (26 pin) aligned down, remove the top locknut (5 mm) from the stud for the ball-pivot fitting (Figure 155).

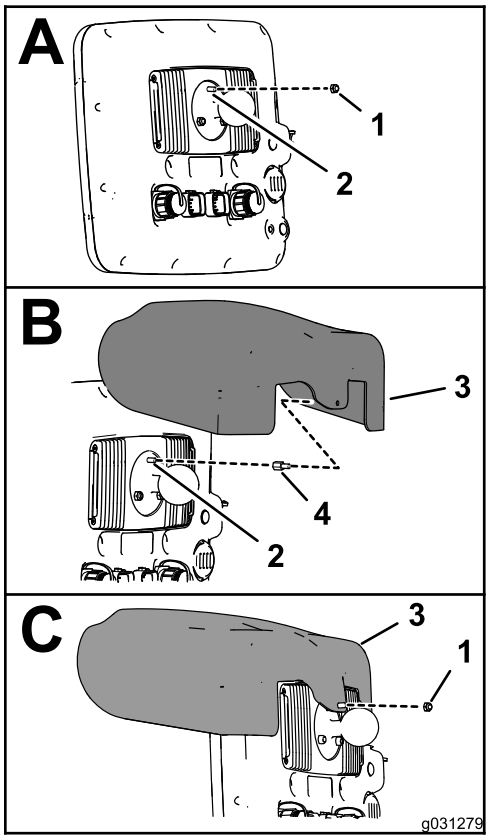

g031279

Figure 155

1. Locknut (5 mm)
2. 5 mm stud (sprayer monitor at the ball-pivot fitting)
3. Display hood
4. Threaded standoff

2. Apply a coat of thread-locking compound (wicking—medium-high strength) to the threads for the nut portion of the threaded standoff (Figure 156).

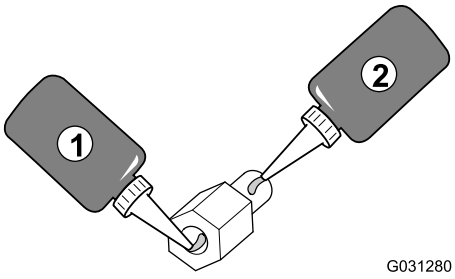

g031280

Figure 156

1. Thread-locking compound (wicking—meduim-high strength)—nut threads of the threaded standoff
2. Thread-locking compound (wicking—meduim-high strength)—stud threads

3. Thread the standoff into the stud for the ball-pivot fitting (Figure 155) and torque the standoff to 250 N·cm (22 in-lb).
4. Apply a coat of thread-locking compound (wicking—medium-high strength) to the threads for the stud portion of the threaded standoff (Figure 156).
5. Align the hole in the display hood with the stud portion of the threaded standoff (Figure 155).
6. Assemble the hood to the monitor with the locknut (5 mm) that you removed in step 1.
7. Torque the nut to 250 N·cm (22 in-lb).

Drilling the Dash Panel

1. At the dash of the machine, locate the dash-panel screw to the right of the hole grommet in the dash (Figure 157).

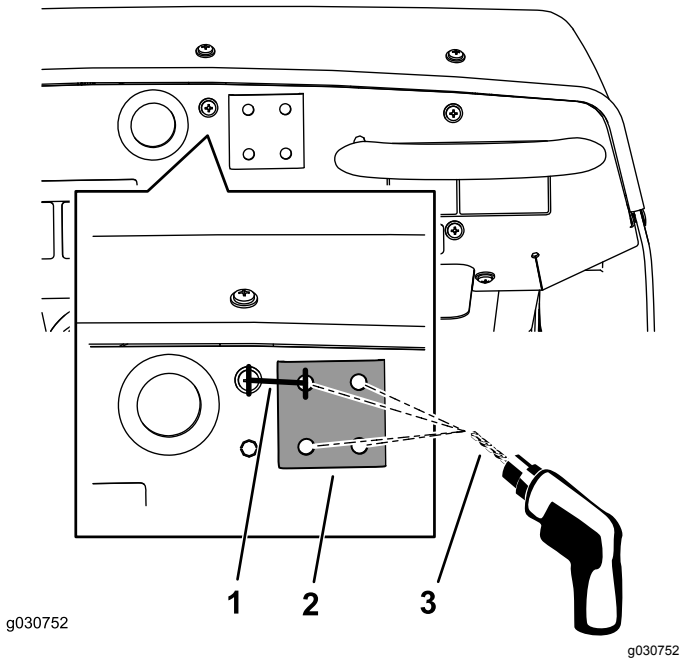

g030752

Figure 157

1. 33.3 mm (1-5/16 inches)
2. Stiffener plate
3. 8 mm (5/16 inch) drill bit

2. Measure to the right of the center of the screw 33.3 mm (1-5/16 inches) and with a pencil, mark the location with a vertical line (Figure 157).
3. Measure from the top edge of the dash panel down 21 mm (13/16 inch), and mark the location with a horizontal line.
4. Center-punch the dash panel at the intersection of the marks.
5. Drill the dash panel at the center-punch mark with an 8 mm (5/16 inch) drill bit (Figure 157).
6. Temporarily align the flat side of the stiffener plate to the dash panel with a flange-head bolt (1/4 x 1-1/2 inches).
7. Align the stiffener plate horizontally to the top of the dash panel and using the stiffener as a

template, drill the remaining 3 holes in the dash (Figure 157).

8. Remove the stiffener plate from the face of the dash panel.

Mounting the Sprayer Monitor to the Dash of the Machine

1. Assemble the ball-pivot mount to the dash with the 4 bolts (1/4 x 1-1/2 inches), stiffener plate, and flange locknut (1/4 inch) as shown in Figure 158.

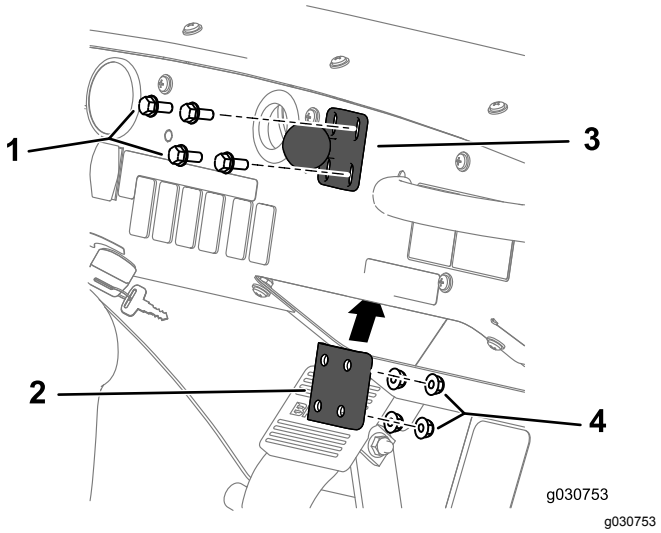

Figure 158

1. Bolt (1/4 x 1-1/2 inches)
2. Ball-pivot mount
3. Stiffener plate
4. Flange locknut (1/4 inch)

2. Torque the bolts and nuts to 1017 to 1243 N·cm (90 to 110 in-lb).
3. Loosen the knob of the monitor arm until you can slip both the ball pivot for the fitting at the back of the sprayer monitor and the ball pivot for the mount at the dash panel into the socket monitor arm (Figure 159).

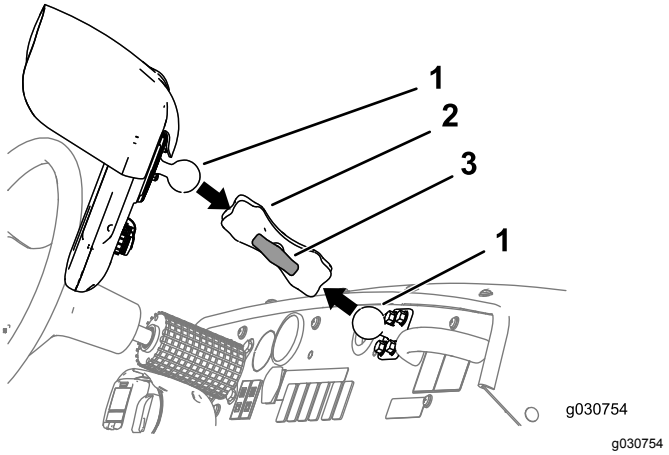

Figure 159

1. Ball pivot
2. Monitor arm
3. Knob

4. From the driver's seat (left seat), adjust to position of the sprayer monitor so that you can easily view the display screen (Figure 159).
5. Tighten the knob for the monitor arm by hand (Figure 159).

31

Installing the Sprayer Controller and Connecting the Rear Wire Harness

Parts needed for this procedure:

1	Sprayer controller—GeoLink precision spray system kit 41623
4	Bolt (4 x 10 mm)
4	Flange locknut (4 mm)

Installing the Sprayer Controller

1. Align the sprayer controller the forward side of the valve mount with the 40-pin connector outward (Figure 160).

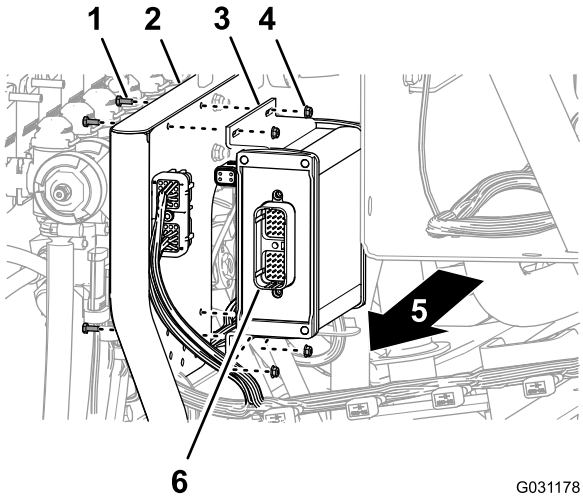

g031178

Figure 160

1. Bolt (4 x 10 mm)
2. 10-valve mount
3. Sprayer controller
4. Flange locknut (4 mm)
5. Right side of the machine
6. 40-pin connector

2. Assemble the sprayer controller to the valve mount (Figure 160) with the 4 bolts (4 x 10 mm) and 4 flange locknuts (4 mm).
3. Torque the bolts and nuts to 234 to 286 N·cm (21 to 25 to in-lb).

Connecting the Rear Wire Harness to the Controller

1. Align the 40 socket connector labeled **ASC 10** of the 203 cm (80 inches) wire harness branch with the 40-pin connector sprayer controller (Figure 161).

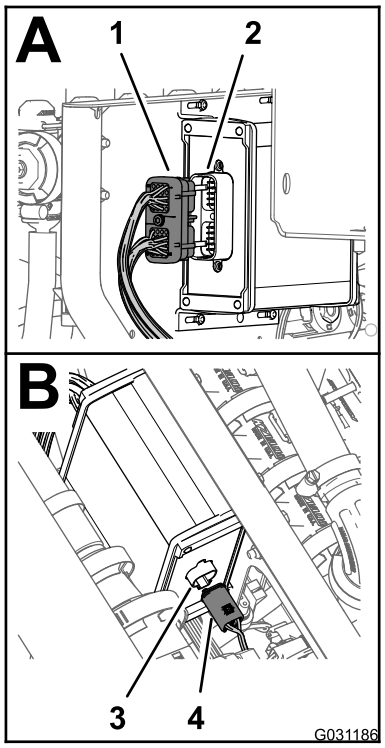

g031186

Figure 161

1. 40-socket connector (rear wire harness—labeled ASC 10)
2. 40-pin connector (sprayer controller)
3. 4-pin connector (sprayer controller)
4. 4-socket connector (rear wire harness—labeled To ASC 10)

2. Plug the 40-socket connector into the 40-pin connector until both connectors are firmly seated.
3. Align the 4 socket connector labeled **To ASC 10** of the 203 cm (80 inch) wire-harness branch with the 4-pin connector sprayer controller (Figure 161).
4. Plug the 4-socket connector into the 4-pin connector until both connectors are firmly seated.

32

Installing the Wire Harnesses for the Navigation Components

Parts needed for this procedure:

1	Data Harness (navigation system)—GeoLink precision spray system kit (Model 41623)
1	Electrical Harness (navigation system)—GeoLink precision spray system kit (Model 41623)
5	Cable tie

Connecting the Navigation Data and Electrical Harnesses

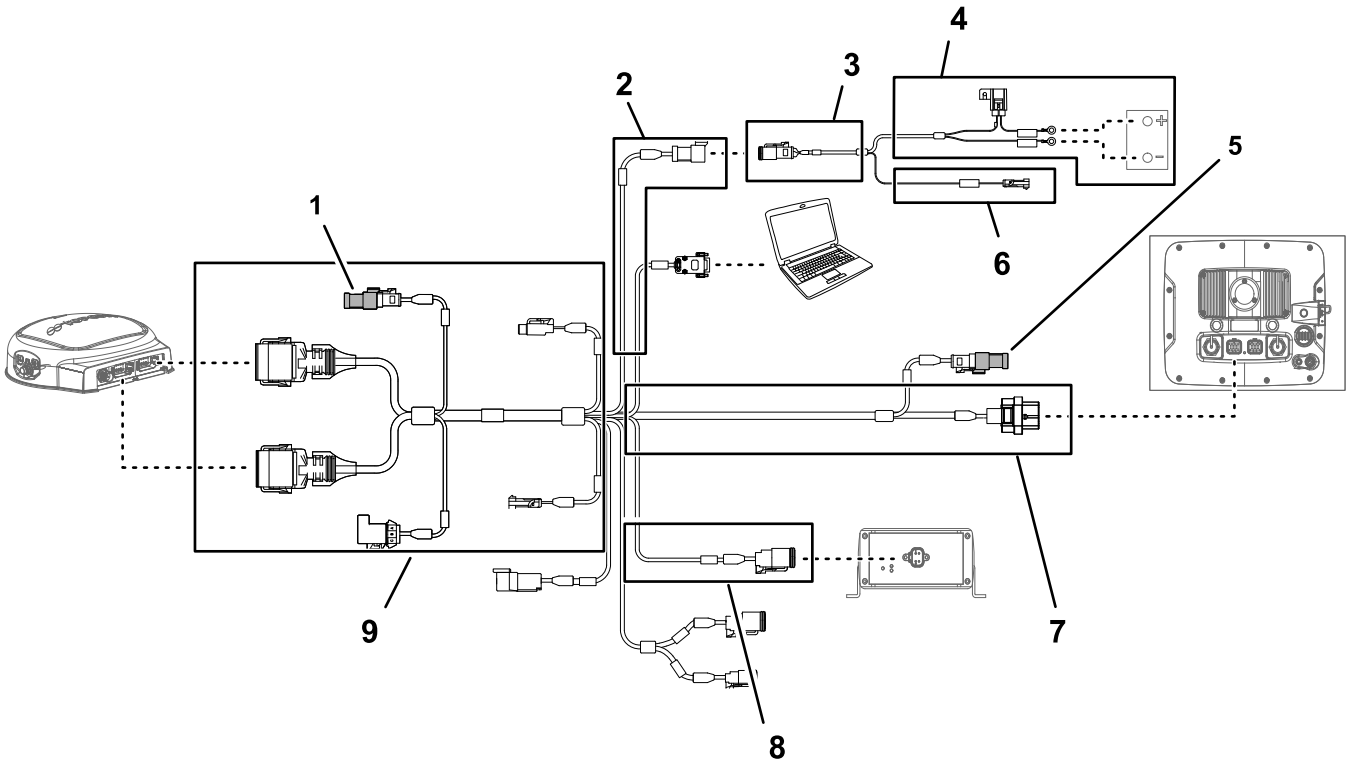

Figure 162

1. Terminating resistor (guidance)
2. 100 cm (39-3/8 inch) data-harness branch (electrical power)
3. 100 cm (39-3/8 inch) battery-harness branch
4. 220 cm (86-5/8 inch) battery-harness branch
5. Terminating resistor (CAN 2)
6. 100 cm (39-3/8 inch) battery-harness branch (switched power)
7. 220 cm (86-5/8 inch) data-harness branch (sprayer monitor)
8. 13 cm (5-1/16 inch) data-harness branch (kit harness interface)
9. 390 cm (153-1/2 inch) data-harness branch (navigation receiver)

1. If not installed, insert the terminating resistor into the electrical connector at the 390 cm (153-1/2 inch) data-harness branch for the navigation receiver (Figure 162).

2. If not installed, insert the terminating resistor into the electrical connector at the 220 cm (86-5/8 inch) data-harness branch for the sprayer monitor (Figure 162).
3. Connect the 3-socket connector (electrical-power interface) of the navigation-electrical harness to the 3-pin connector (electrical-power interface) of the data harness (Figure 162 and Figure 163).

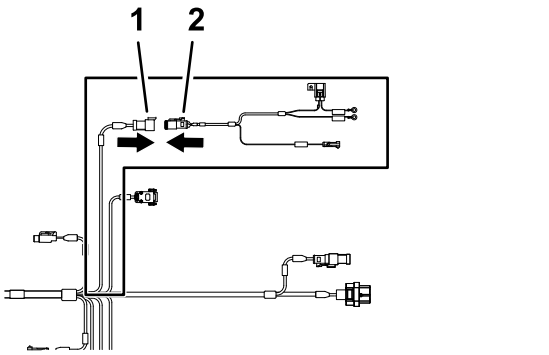

Figure 163

1. 3-pin connector—data harness (SYSTEM POWER SEPARATION)
2. 3-socket connector—battery harness (electrical–power interface)

Routing and Connecting the Data Cable to the Navigation Receiver

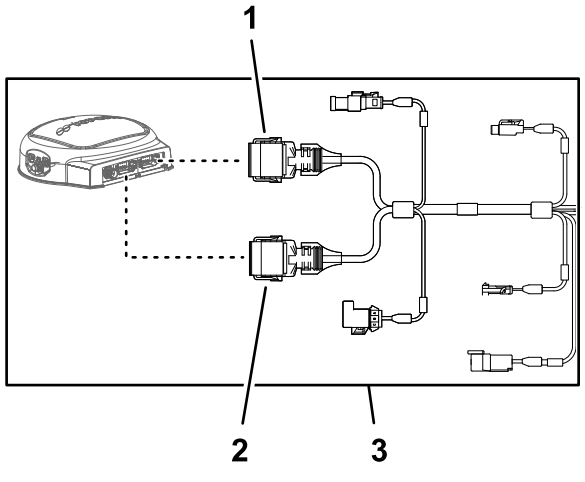

Figure 164

1. 12-socket connector (gray) data harness (navigation receiver)
2. 12-socket connector (black) data harness (navigation receiver)
3. 390 cm (153-1/2 inch) data-harness branch (navigation receiver)

1. Route the 390 cm (153-1/2 inches) branch of the data harness into the right side of the engine compartment (adjacent to the air filter for the engine) and rearward under the bottom right area of the rear engine shroud (Figure 165).

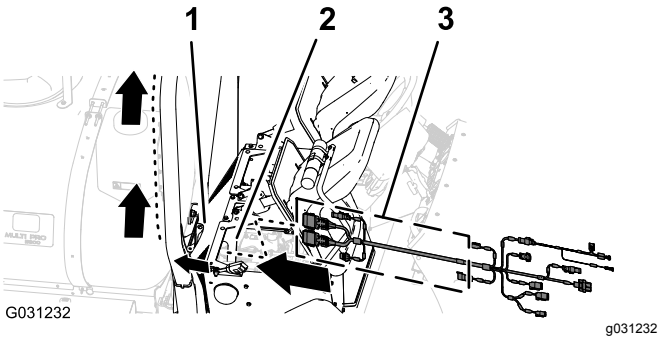

Figure 165

1. Rear engine shroud
2. Engine compartment
3. 390 cm (153-1/2 inches) branch (data harness)

2. Route the 390 cm (153-1/2 inches) branch of the data harness along the right ROPS tube with the 12-socket connector (gray) and 12-socket connector (black) up toward the navigation receiver (Figure 166).

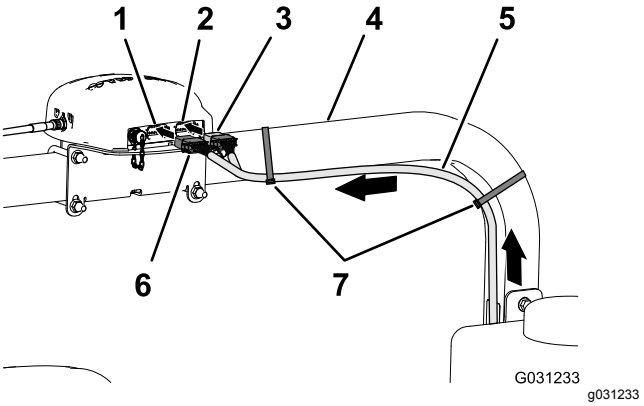

Figure 166

1. 12-pin connector left (gray)—navigation receiver
2. 12-pin connector right (black)—navigation receiver
3. 12-socket connector (black)—data harness
4. Right ROPS tube
5. 390 cm (153-1/2 inches) data-harness branch
6. 12-socket connector (gray/black)—data harness
7. Cable ties

3. Align the 2 keys at the long face of the gray and black 12-socket connector of the data harness with the 2 key slots in the bottom, horizontal wall of the left (gray) 12-pin connector of the navigation receiver (Figure 167).

   Note: Use caution when connecting wire harness to the navigation receiver; the alignment keys of the harness connectors are unique to the keyways of the pin connectors of the navigation receiver.

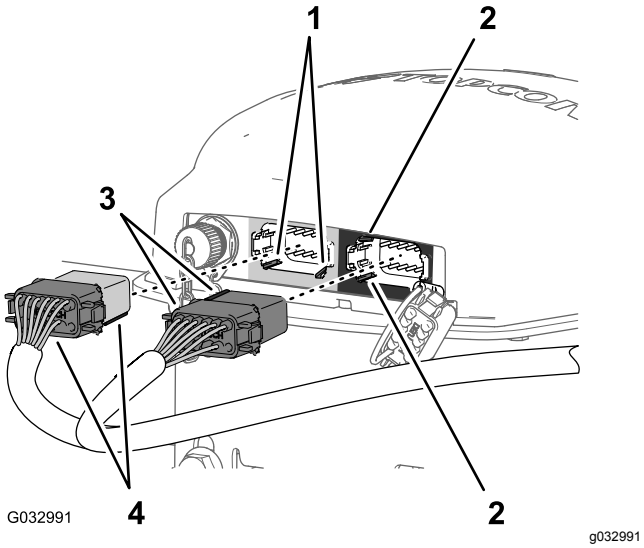

Figure 167

1. Key slots—bottom, horizontal wall (left (gray) 12-pin connector—navigation receiver)
2. Key slots—left, vertical wall (right (black) 12-pin connector—navigation receiver)
3. Alignment keys—short face (black) 12-socket connector—data harness
4. Alignment keys—long face (gray/black) 12-socket connector—data harness

4. Connect the gray and black 12-socket connector of the data harness into the left (gray) 12-pin connector of the navigation receiver until the connector locks snap together securely (Figure 167).
5. Align the 2 keys at the short side of the black 12-socket connector of the data harness with the 2 key slots in the left, vertical wall of the right (black) 12-pin connector of the navigation receiver (Figure 167).

   Note: Use caution when connecting wire harness to the navigation receiver; the alignment keys of the harness connectors are unique to the keyways of the pin connectors of the navigation receiver.
6. Connect the black only 12-socket connector of the data harness into the left (black) 12-pin connector of the navigation receiver until the connector locks snap together securely (Figure 167).
7. Secure the 390 cm (153-1/2 inches) branch of the data harness to the right ROPS tube with 2 cable ties as shown in Figure 166.

   Note: Ensure that the cable is slack between the 12-socket connectors and the cable tie.

Connecting the Navigation Electrical and Data Harnesses to the Rear Wire Harness of the Machine

1. Route the 100 cm (39-3/8 inches) branch of the electrical harness (Figure 168) with the 1-pin connector, down to the area where the front and rear wire harness for the machine connect; refer to Figure 86 in Connecting the Front and Rear Wire Harnesses (page 40).

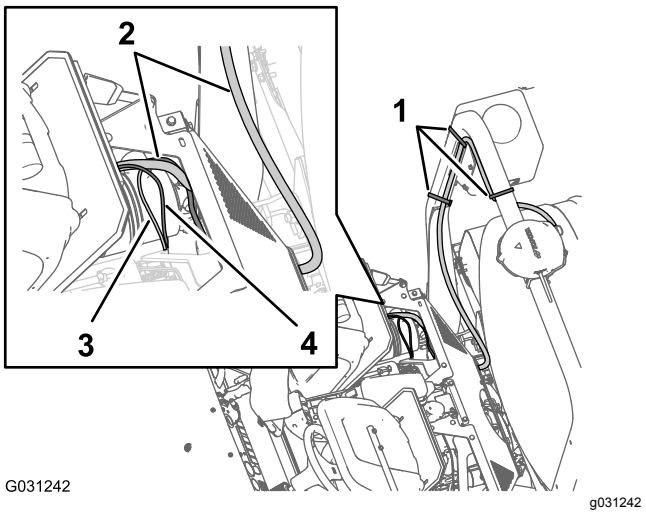

Figure 168

1. Cable ties
2. 390 cm (153-1/2 inches)—data harness branch
3. 100 cm (39-3/8 inches)—electrical harness branch
4. 100 cm (39-3/8 inches)—data harness branch

2. Route the 100 cm (39-3/8 inches) branch of the data harness (Figure 168) with the 4-pin connector for the CAN 2/sprayer controller, down to the area where the front and rear wire harness for the machine connect; refer to Figure 86 in Connecting the Front and Rear Wire Harnesses (page 40).
3. Connect the 4-pin connector of the data harness for the CAN 2/sprayer controller into the 4-socket connector of the rear harness for the CAN 2/sprayer-controller circuit (Figure 169).

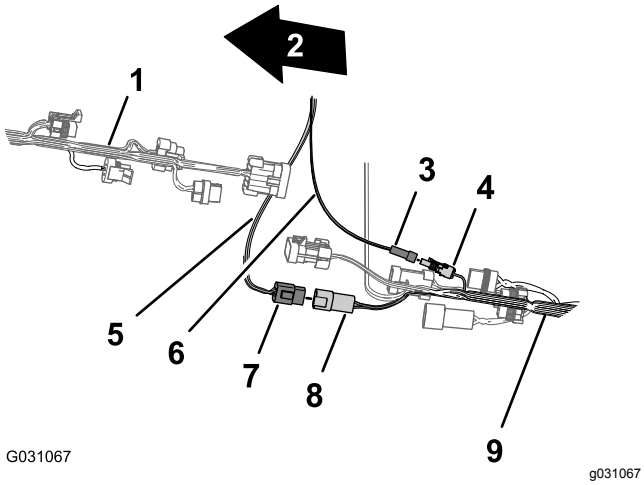

Figure 169

1. Front of the machine
2. Front wire harness of the machine
3. 1-pin connector—electrical harness branch (switched power)
4. 1-socket connector—rear wire harness (switched power)
5. Data harness (CAN 2/sprayer controller)
6. Electrical harness (switched power)
7. 4-pin connector—data harness (CAN 2/sprayer controller)
8. 4-socket connector—rear wire harness (CAN 2/sprayer controller)
9. Rear wire harness of the machine

4. Connect the 1-pin connector of the electrical-harness to the 1 socket connector of the rear wire harness (Figure 169).

Routing the Navigation Electrical Harness to the Battery

1. Route the 220 cm (86-5/8 inches) branch of the electrical harness for the navigation system across the seat-box angle and down along the left support for the engine shroud (Figure 170).

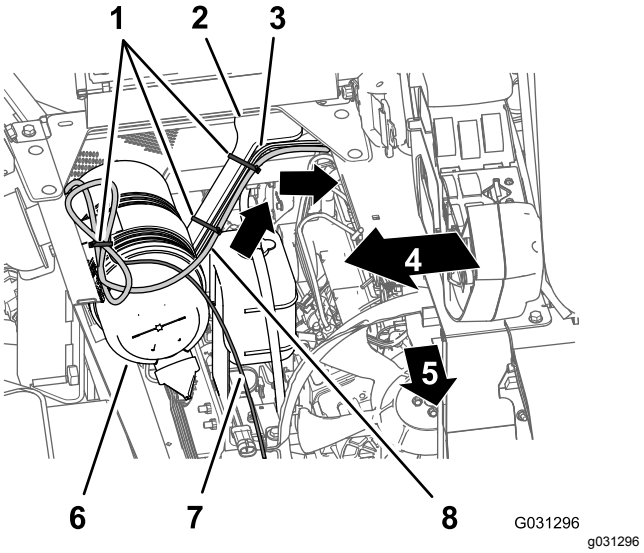

Figure 170

1. Cable ties
2. Engine-shroud support
3. 165 cm (65 inches) branch (rear wire harness)
4. Right side of the machine
5. Front of the machine
6. Air filter (engine)
7. 220 cm (86-5/8 inches) branch (data harness)
8. 220 cm (86-5/8 inches) branch (navigation electrical harness)

2. Secure the harness to the engine-shroud support with cable ties (Figure 170).
3. Route the 220 cm (86-5/8 inches) branch of the electrical harness for the navigation system down along the left support for the engine shroud and under the left frame tube (Figure 171).

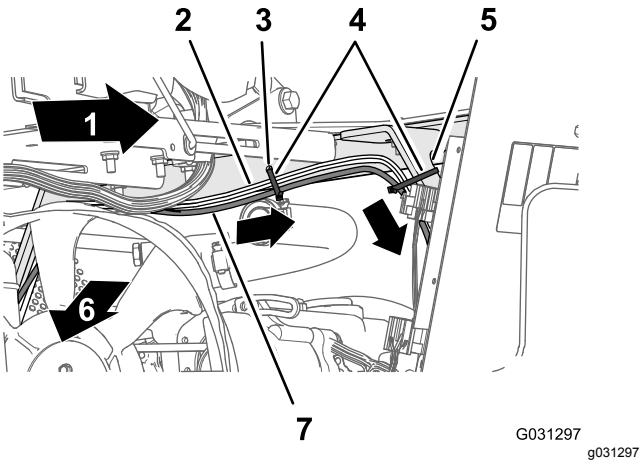

Figure 171

1. Left side of the machine
2. 165 cm (65 inches) branch (rear wire harness)
3. Hole in the seat-box angle
4. Cable ties
5. Engine-shroud support
6. Front of the machine
7. 220 cm (86-5/8 inches) branch (navigation electrical harness)

4. Secure the harness to the hole in the seat-box angle and the engine-shroud support with 3 cable ties (Figure 171 and Figure 172).

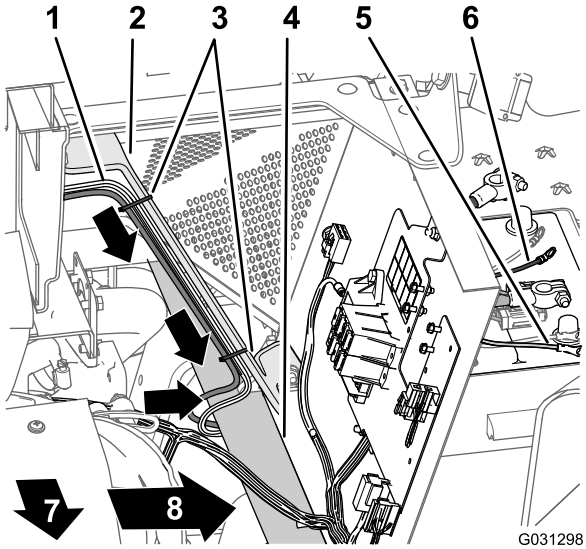

Figure 172

1. 165 cm (65 inches) branch (rear wire harness)
2. Engine-shroud support
3. Cable ties
4. Left frame tube
5. Negative ring terminal (black wire)—165 cm (65 inches) branch (rear wire harness)
6. Positive ring terminal (red wire)—165 cm (65 inches) branch (rear wire harness)
7. Front of the machine
8. Left side of the machine

5. Route the 10 A fuse and the positive and negative ring terminals of the 220 cm (86-5/8 inches) branch of the electrical harness for the navigation system to the top of the battery (Figure 172).

   Note: You will complete the installation of the ring terminals in Assembling the Rear Harness and Navigation Electrical Harness to the Battery Cables (page 80).

Routing and Connecting the Data Cable to the Sprayer Monitor

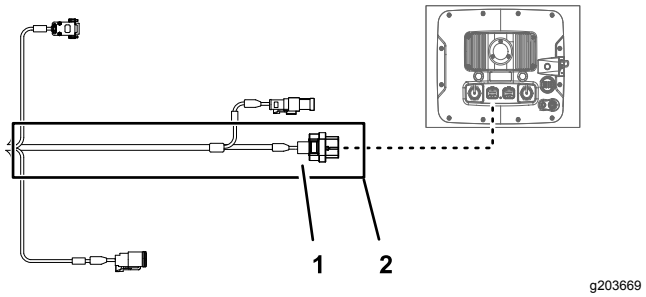

Figure 173

1. 26-socket connector—data harness (sprayer monitor)
2. 220 cm (86-5/8 inch) data-harness branch (sprayer monitor)

1. At the right side of the engine compartment, route the 220 cm (86-5/8 inches) branch of the data harness forward of the air filter for the engine and down toward the lower right corer of the radiator (Figure 174).

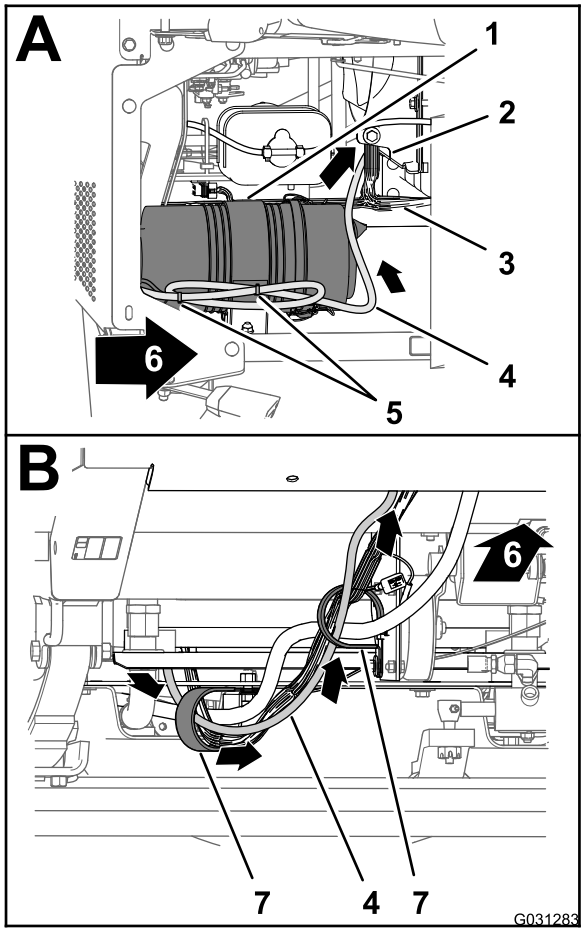

Figure 174

1. Air filter (engine)
2. Radiator
3. Front wire harness of the machine
4. 220 cm (86-5/8 inches) data harness branch
5. Cable ties
6. Font of the machine
7. R-clamps

2. Route the route the 220 cm (86-5/8 inches) branch of the data harness forward and through the 2 R-clamps at the bottom of the machine (Figure 174).
3. Route the route the 220 cm (86-5/8 inches) branch of the data harness forward and up through grommet that surrounds the hole in the floor panel (Figure 175).

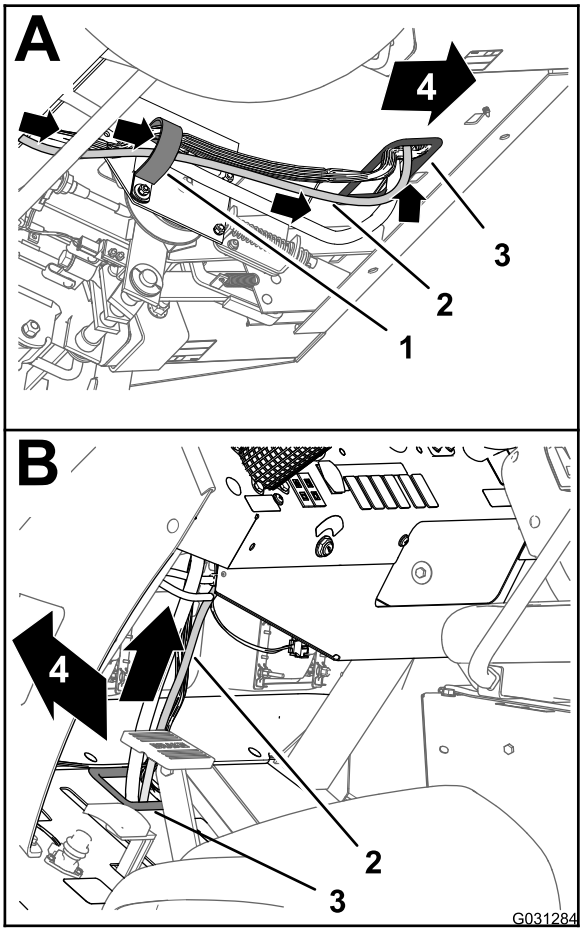

Figure 175

1. R-clamp
2. 220 cm (86-5/8 inches) data harness branch
3. Grommet (floor pan)
4. Front of the machine

4. Route the route the 220 cm (86-5/8 inches) branch of the data harness up and along the front wire harness of the machine (Figure 175).
5. Route the route the 220 cm (86-5/8 inches) branch of the data harness up through grommet that surrounds the hole in the dash panel (Figure 176).

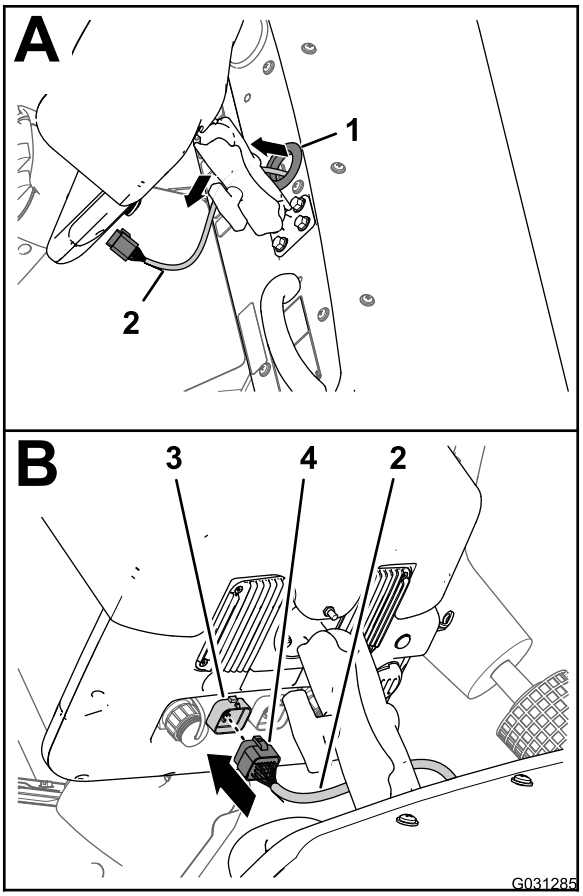

g031285

Figure 176

1. Grommet (dash panel)
2. 220 cm (86-5/8 inches) data harness branch
3. 26-pin connector (sprayer display)
4. 26-socket connector—data harness (sprayer monitor)

6. Align the 26-socket connector of the data harness with the 26-pin connector of the sprayer display and press the socket connector into the pin connector until the latch of the connector snaps securely (Figure 176).

Assembling the Rear Harness and Navigation Electrical Harness to the Battery Cables

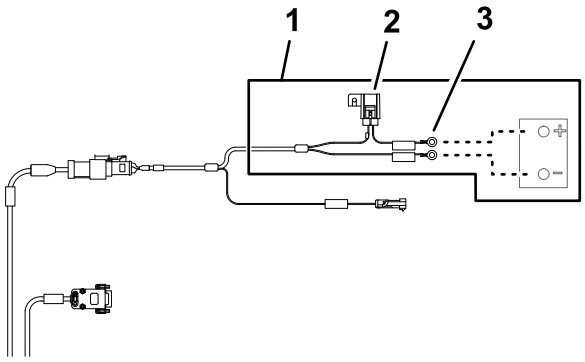

g203667

Figure 177

1. 220 cm (86-5/8 inch) battery-harness branch
2. 10 A fuse (battery)
3. Ring terminals (battery)

1. Route the positive terminal (red wire), negative terminal (black wire), and 50 A fuse block of the rear wire harness up between the battery box and the chassis of the machine (Figure 178).

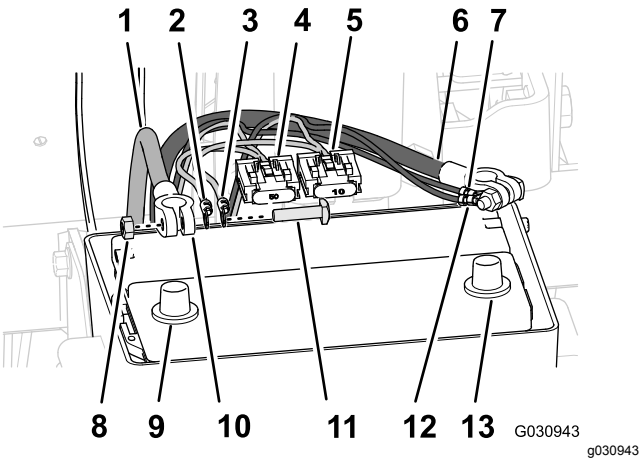

Figure 178

1. Positive battery cable
2. Positive-ring terminal (red wire)—165 cm (65 inches) branch (rear wire harness)
3. Positive-ring terminal (red wire)—220 cm (86-5/8 inches) branch (navigation electrical harness)
4. 50 A fuse block—rear wire harness
5. 10 A fuse block—navigation electrical harness
6. Negative battery cable
7. Hex nut
8. Battery post (positive)
9. Terminal (battery cable)
10. T-bolt
11. Negative ring terminal (black wire)—165 cm (65 inches) branch (rear wire harness)
12. Negative ring terminal (black wire)—220 cm (86-5/8 inches) branch (navigation electrical harness)
13. Battery post (negative)

2. Route the positive terminal (red wire), negative terminal (black wire), and 10 A fuse block of the navigation-electrical harness up between the battery box and the chassis of the machine.
3. Remove the T-bolts and hex nuts from the terminals of the positive and negative battery cables (Figure 178).
4. Assemble a T-bolt through the positive terminal (red wire) of the rear wire harness, the positive terminal of the navigation electrical harness, and terminal of the positive battery cable (Figure 178).
5. Loosely secure the terminals and the T-bolt with a hex nut (Figure 178).

   Note: Do not install the battery cable to the battery at this time.
6. Assemble a T-bolt through the negative terminal (black wire) of the rear wire harness, the negative terminal of the navigation electrical harness, and terminal of the negative battery cable (Figure 178).
7. Loosely secure the terminals and the T-bolt with a hex nut (Figure 178).

   Note: Do not install the battery cables to the battery at this time.

33

Installing the Optional Undercarriage Shroud Kit

No Parts Required

Procedure

1. Align the undercarriage shroud to the bottom chassis of the machine (Figure 179).

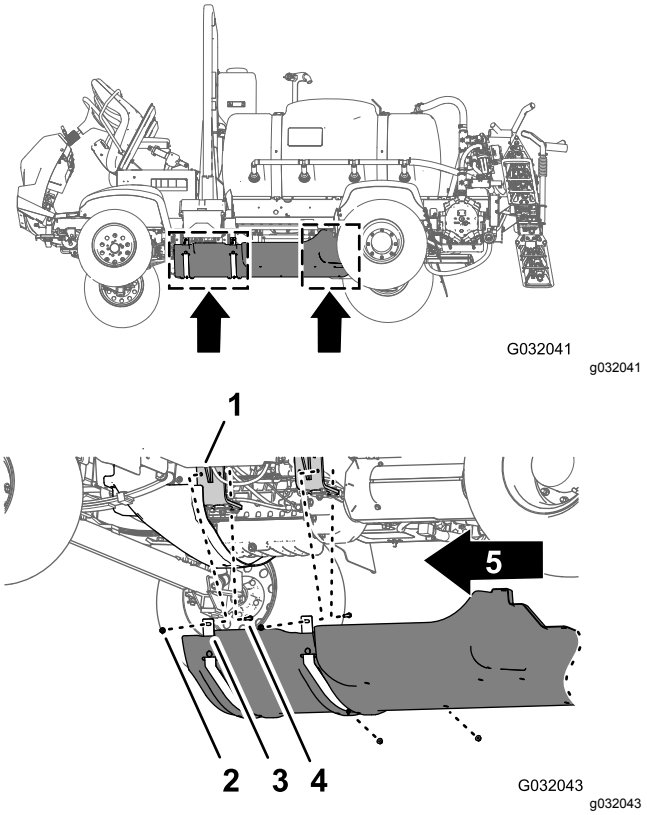

Figure 179

1. Undercarriage shroud
2. Flange-head bolts (5/16 x 7/8 inch)
3. Washers (5/16 inch)
4. Front of the machine

2. Slip the support straps of the undercarriage shroud over the bolts and carriage bolt at the engine-mount brackets of the machine (Figure 179).
3. Assemble the undercarriage shroud to the engine-mount brackets and bolts (Figure 179)

with the 4 flange locknuts (5/16 inch) that you removed in step 2 of 12 Removing the Optional Undercarriage Shroud Kit (page 24).

4. Align the holes in the rear part of the undercarriage shroud with the holes in the chassis (Figure 180).

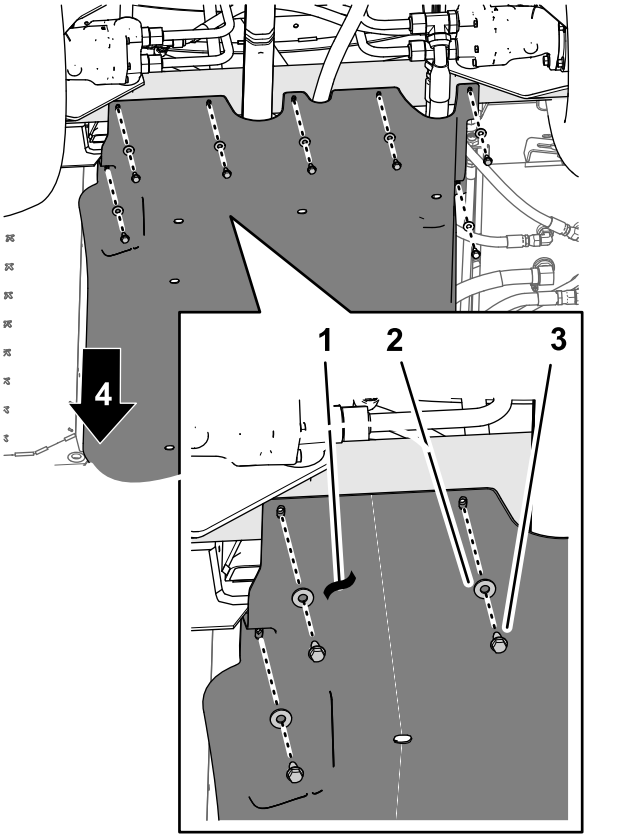

Figure 180

1. Undercarriage shroud
2. Washers (5/16 inch)
3. Flange-head bolts (5/16 x 7/8 inch)
4. Front of the machine

5. Assemble the rear part of the undercarriage shroud to the chassis with the 7 flange-head bolts (5/16 x 7/8 inch) and 7 washers (5/16 inch) that you removed in step 1 of 12 Removing the Optional Undercarriage Shroud Kit (page 24) (Figure 180).
6. Torque the nuts and bolts to 1129 to 1582 N·cm (100 to 140 in-lb).

34

Connecting the Optional Hand Spray Wand Kit, Electric Hose Reel Kit, or Pivoting Hose Reel Kit

Parts needed for this procedure:

1	90° elbow with side port (Toro Part No. 131-3726)
1	Flange clamp and gasket (Toro Part No. 127-9829)
1	Shutoff valve (Toro Part No. 130-7321)

Installing the Control Box to the Manifold Mount

Hand Spray Wand Kit or Electric Hose Reel Kit

1. Align the hose in the mounting plate for the control box with the holes or slots in the manifold mount for the sprayer valves (Figure 181).

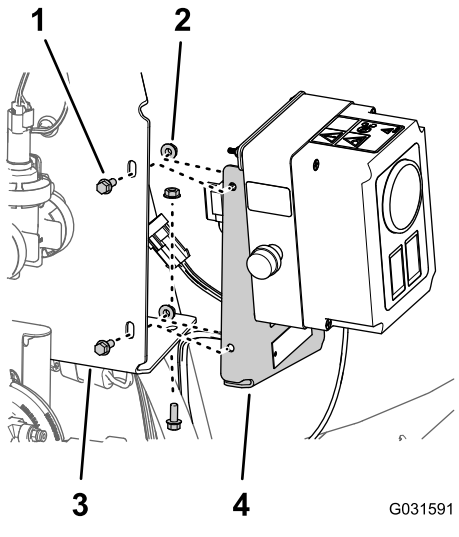

Figure 181

Electric hose-reel kit shown; the hand spray-wand kit is similar.

1. Flange-head bolts (1/4 x 5/8 inch)
2. Serrated-flange nuts (1/4 inch)
3. Manifold mount (sprayer valve)
4. Mounting plate (control box)

2. Assemble the control box to the manifold mount (Figure 181) with the 3 flange-head bolts (1/4 x 5/8 inch) and 3 serrated-flange nuts (1/4 inch) that you removed in step 1 of Removing the Control Box from the Manifold Mount (page 13).

3. Torque the nuts and bolts to 1017 to 1243 N·cm (90 to 110 in-lb).

Installing the Pivoting Hose Reel to the Manifold Mount

Lifting equipment capacity: 57 kg (125 lb)

1. Lift the pivoting hose reel with lifting equipment with the specified capacity.
2. Align the holes in the support channel for the pivoting-hose reel with the holes in the manifold mount for the sprayer valves (Figure 182).

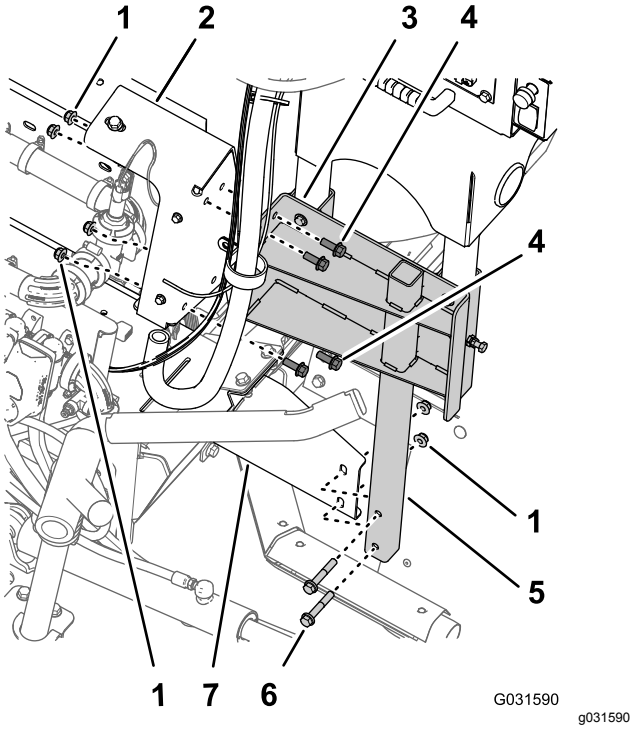

Figure 182

1. Flange locknuts (3/8 inch)
2. Manifold mount (sprayer valves)
3. Support channel (pivoting hose reel)
4. Flange-head bolts (3/8 x 1 inch)
5. Lower tube frame (pivoting hose reel)
6. Flange-head bolts (3/8 x 2-1/4 inches)
7. Mounting bracket (right frame channel of the machine)

3. Align the holes in the lower tube frame for the pivoting-hose reel with the holes in the mounting bracket at the right frame channel of the machine (Figure 182).
4. Assemble the support channel to the manifold mount (Figure 182) with the 4 flange-head bolts (3/8 x 1 inch) and flange locknuts (3/8 inch) that you removed in step 3 of Removing the Pivoting-Hose Reel from the Manifold Mount (page 15).
5. Assemble the lower tube frame to the mounting bracket (Figure 182) with the 2 flange-head bolts (3/8 x 2-1/4 inches) and 2 flange locknuts (3/8 inch) that you removed in step 2 of Removing the Pivoting-Hose Reel from the Manifold Mount (page 15).
6. Torque the bolts and nuts to 37 to 45 N·m (27 to 33 ft-lb).

Assembling the Hose and Fittings

1. Remove the tube coupler from the cap at the flange at the right end of nozzle valve 10 (Figure 183).

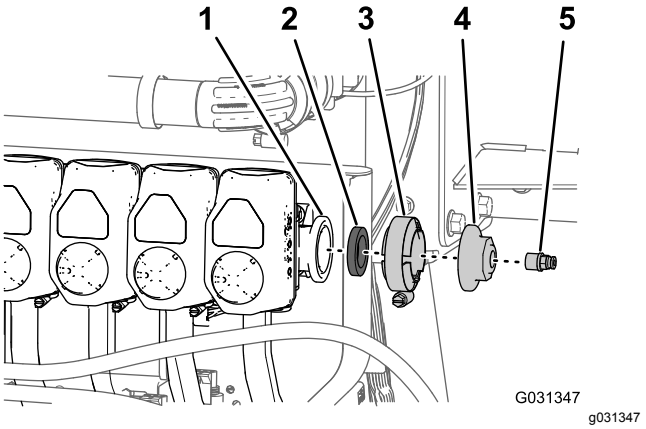

Figure 183

1. Flange (nozzle valve 10)
2. Gasket
3. Flange clamp
4. Cap
5. Tube coupler

2. Remove the flange clamp, gasket, and end cap from nozzle valve 10 (Figure 183).

   Note: Retain the tube connector, flange clamp, and gasket for installation later in this procedure. You no longer need the end cap that you removed from the machine.
3. Apply PTFE thread-sealing tape to the threads of the T-fitting (Figure 184) that you removed in step 3 of Disconnecting the Hoses and Tubing (page 13).

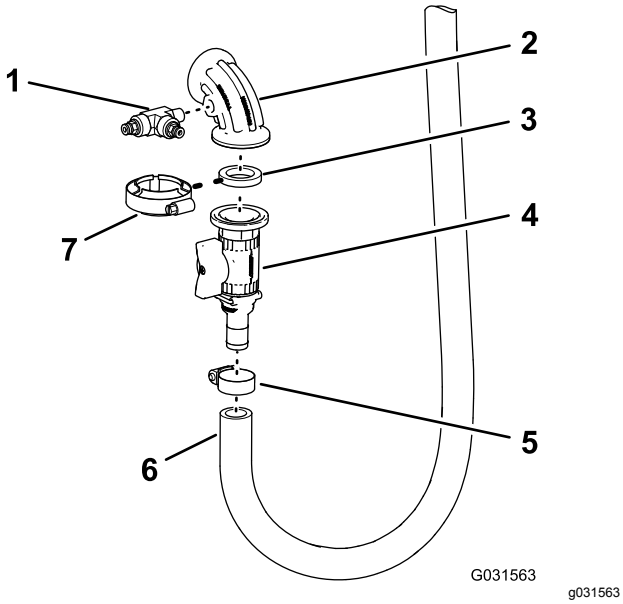

Figure 184

1. T-fitting and tube connectors
2. 90° elbow with side port
3. Gasket
4. Shutoff valve
5. Hose clamp
6. Inlet hose
7. Flange clamp

4. Assemble the T-fitting into the 90° elbow with side port as shown in either Figure 184, and tighten the fitting by hand.
5. Loosely assemble the 90° elbow with side port, gasket, and shutoff valve with the flange clamp (Figure 184).
6. Assemble the barbed fitting of the shutoff valve into with the inlet hose and hose clamp (Figure 184) that you removed in step 4 of Disconnecting the Hoses and Tubing (page 13).

Installing the Hose and Sense Tubes

1. Align the gasket and 90° elbow for the hose reel to the flange from nozzle valve 10 (Figure 185).

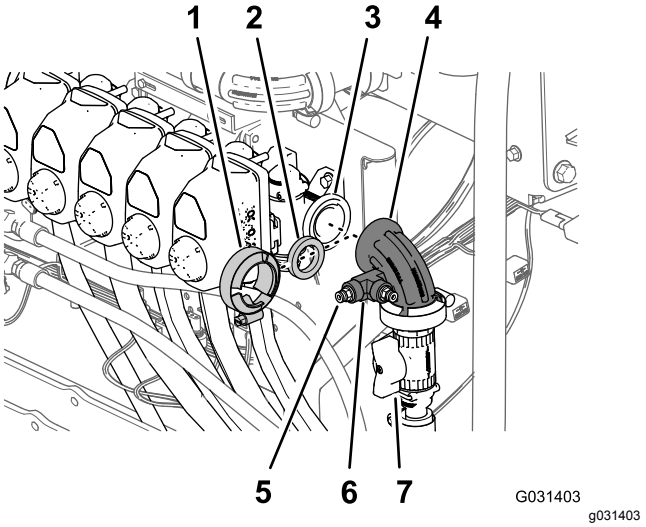

Figure 185

1. Flange clamp
2. Gasket
3. Flange (nozzle valve 10)
4. 90° elbow
5. Tube coupler
6. T-fitting
7. Shutoff valve (hose reel)

2. Secure the elbow and gasket to the valve with a flange clamp and tighten the clamp by hand (Figure 185).
3. Apply a coat of PTFE thread sealant to the threads of the tube coupler and install the tube couple into the T-fitting as shown in Figure 185.
4. Insert the end of the pressure-sense tube for the dash-pressure gauge into the tube coupler until the tube fully seats in the coupler (Figure 186).

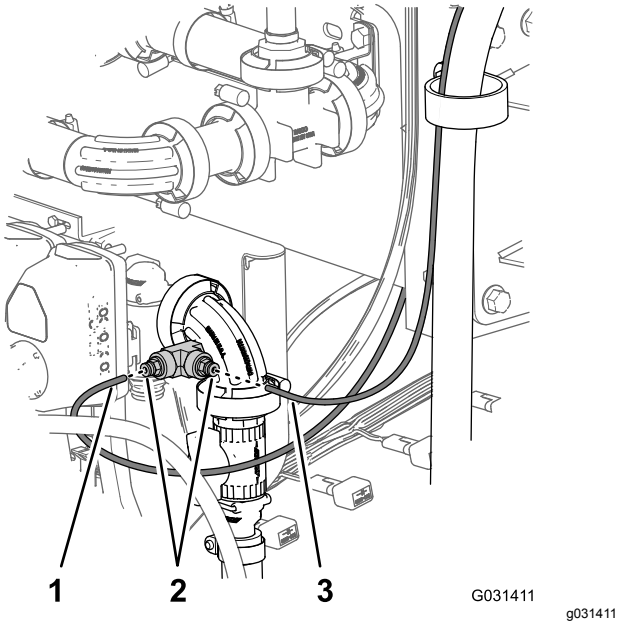

Figure 186

Pivoting Hose-Reel Kit shown; the Electric Hose-Reel Kit and the Hand Spray-Wand Kit are similar

1. Pressure-sense tube (dash pressure gauge)
2. Tube couplers
3. Pressure-sense tube (pressure gauge for the hose reel kit)

5. Insert the end of the pressure-sense tube for the pressure gauge of the hose reel into the tube coupler until the tube fully seats in the coupler (Figure 186).

Connecting the Optional Hand Sprayer Kit or Electric Hose Reel Kit Harness

At the control box for the hand-spray gun or electric hose reel, connect the 6-pin connector for the control-box harness into the 6-socket connector of the rear, main harness of the machine (Figure 187 and Figure 188).

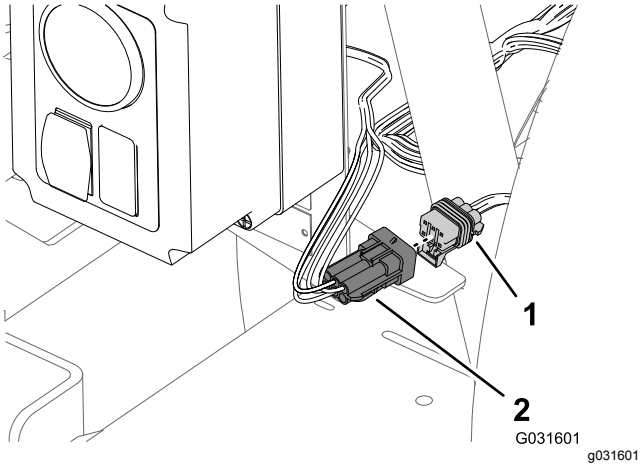

Figure 187

Control box—hand spray-wand kit

1. 6-socket connector(rear, main harness of the machine)
2. 6-pin connector (control box harness)

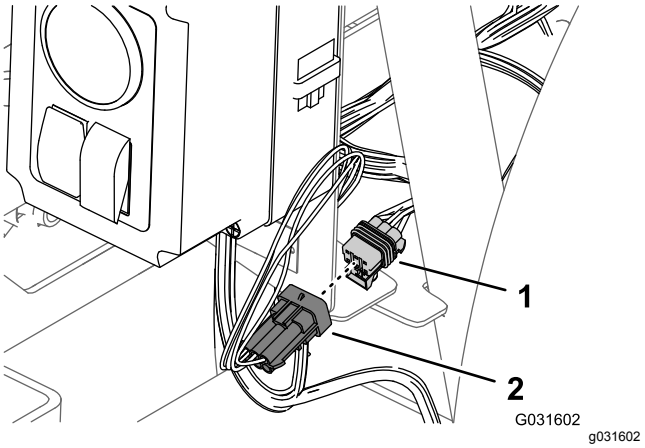

Figure 188

Control box—electric hose-reel kit

1. 6-socket connector(rear, main harness of the machine)
2. 6-pin connector (control box harness)

Connecting the Wire Harness for the Optional Pivoting Hose Reel Kit

1. At the back of the machine, locate the wire harness for the pivoting hose-reel kit at the back of the sprayer tank (Figure 189).

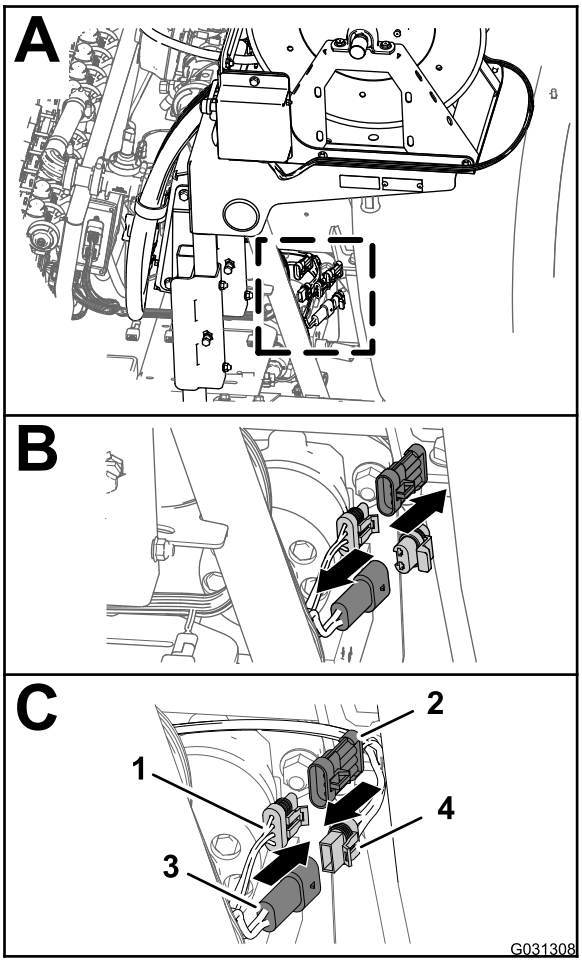

Figure 189

1. 3-socket connector (rear, main harness)
2. 3-pin connector (harness—electric hose reel)
3. 2 socket pin (rear, main harness)
4. 2 socket connector (harness—electric hose reel)

2. Remove the plug from the 2-pin connector of the rear, main harness for the hose-reel power (Figure 189).
3. Connect the 2-socket connector of the harness for the electric-hose reel into the 2 pin connector of the rear, main harness (Figure 189).
4. Remove the cap from the 3-socket connector of the rear, main harness for the spray-harness interconnect (Figure 189).
5. Connect the 3-pin connector of the harness for the electric-hose reel into the 3 pin socket of the rear, main harness (Figure 189).

35

Connecting the Optional Foam Marker Kit

Parts needed for this procedure:

1	Wire harness—optional Foam Marker Finishing Kit 130-8292
5	Cable tie—optional Foam Marker Finishing Kit 130-8292
1	Relay—optional Foam Marker Finishing Kit 130-8292
1	Flange-head bolt (#10-24 x 1/2 inch)—Foam Marker Finishing Kit 130-8292
1	Locknut (#10-24—optional Foam Marker Finishing Kit 130-8292)
1	Auxiliary fuse block—Toro Part No. 92–2641
1	Fuse (15 A—optional Foam Marker Finishing Kit 130-8292)
4	Flange-head bolts (6 x 12 mm)—optional Foam Marker Finishing Kit 130-8292
1	Mounting bracket (foam-control switch)—optional Foam Marker Finishing Kit 130-8292
1	3-position paddle switch (foam-control switch)—optional Foam Marker Finishing Kit 130-8292
1	2-position rocker switch (compressor on/off switch)—optional Foam Marker Finishing Kit 130-8292

Routing the Compressor Branch of the Wire Harness

1. Locate the 236 cm (93 inches) compressor branch of the wire harness with a 4-socket connector and route the wiring branch rearward along the sprayer tank as shown in Figure 190 and Figure 191.

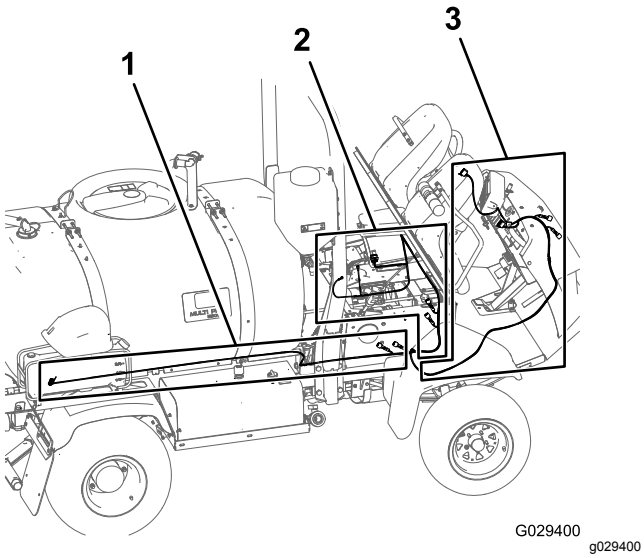

Figure 190

1. 236 cm (93 inches) branch of the wire harness for the finishing kit—compressor branch
2. 197 cm (77-1/2 inches) branch of the wire harness for the finishing kit—engine compartment branch
3. 240 cm (94-1/2 inches) branch of the wire harness for the finishing kit—dash panel branch

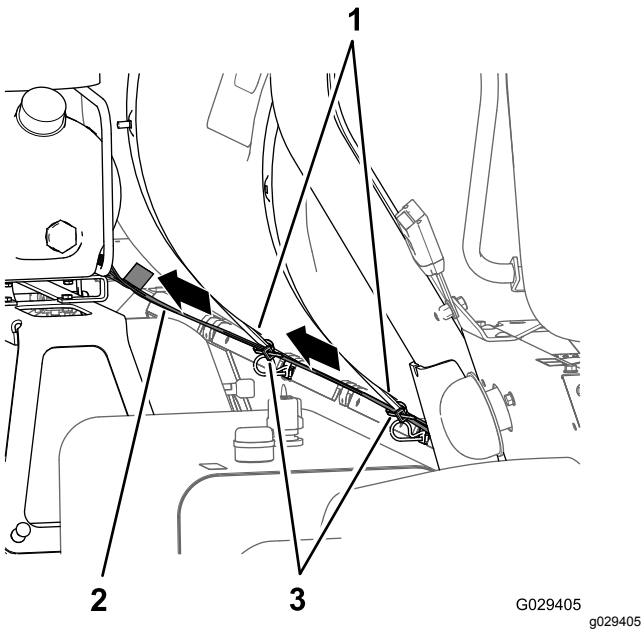

Figure 191

1. 236 cm (93 inches)—compressor branch
2. Sprayer-tank straps
3. Cable ties

2. Route the 4-socket connector of the harness to the 4-pin connector of the compressor and connect the 2 connectors.

Note: The compressor is located above the foam-marker tank.

Routing the Engine-Compartment Branch of the Wire Harness

1. Route the wire harness for the finishing kit forward between the ROPS bar and the lower corner of the sprayer tank, along the wire harness of the machine, and below the air cleaner for the engine (Figure 192 and Figure 193).

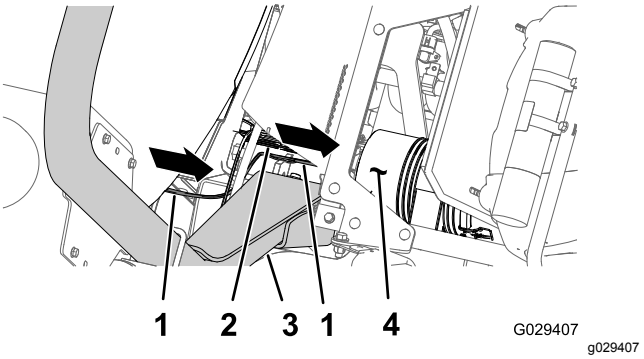

Figure 192

1. 236 cm (93 inches)—compressor branch
2. Wire harness for the machine
3. ROPS
4. Air cleaner (engine)

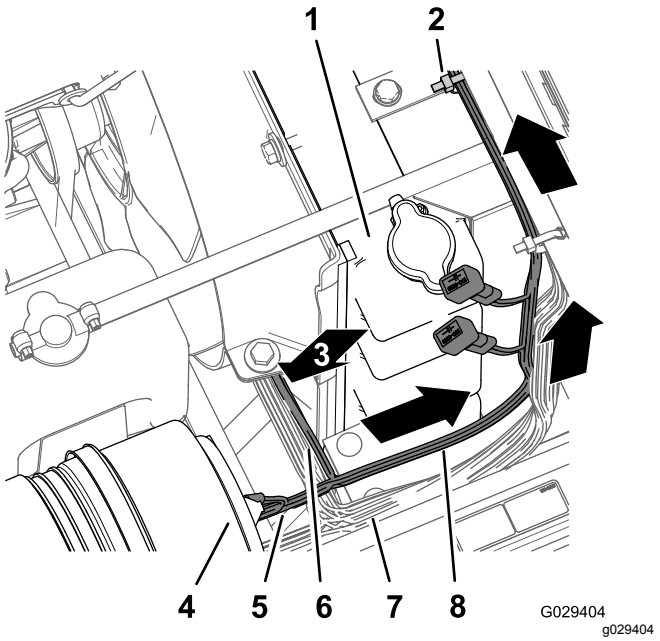

Figure 193

1. Radiator
2. Cable tie
3. 240 cm (94-1/2 inches)—dash panel branch (routed down)
4. Air filter (engine)
5. 236 cm (93 inches)—compressor branch
6. 240 cm (94-1/2 inches)—dash panel branch
7. Wire harness for the machine
8. 197 cm (77-1/2 inches)—engine-compartment branch

2. Route the 197 cm (77-1/2 inches) engine compartment branch of the wire harness (with the ring terminal, socket terminal, and 5-socket connector) up along the right side of the radiator, across the top of the radiator, under the base of the center console (Figure 193).
3. Route the 197 cm (77-1/2 inches) engine compartment branch of the wire harness down along the left side of the radiator and across the bottom of the electrical panel (Figure 194).

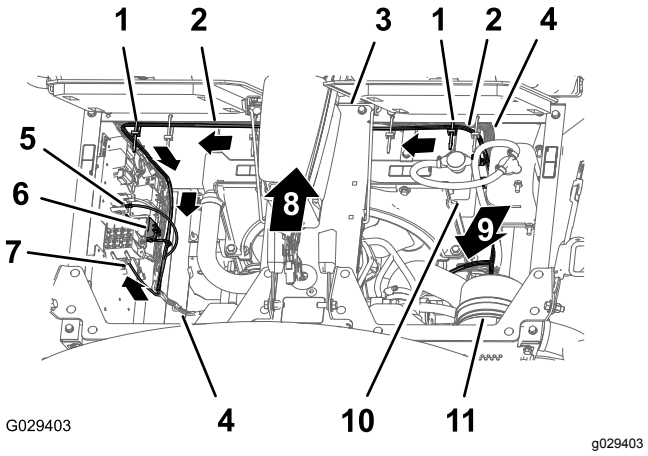

Figure 194

1. Cable ties
2. 197 cm (77-1/2 inches)—engine compartment branch
3. Base of the center console
4. Wire harness for the machine
5. Ring terminal (wire harness for the finishing kit)
6. 5-socket connect (wire harness for the finishing kit)
7. Blade connector (wire harness for the finishing kit)
8. Front of the machine
9. 240 cm (94-1/2 inches)—dash panel branch (routed down)
10. Radiator
11. Air filter

4. Secure the wire harness for the finishing kit to the wire harness for the machine with 2 cable ties as shown in Figure 194.

Routing the Dash Panel Branch of the Wire Harness

1. Route the 240 cm (94-1/2 inches) dash panel branch of the wire harness along the wire harness and steering hoses of the machine (below the radiator), through the R-clamp at the bottom of the radiator support, through the R-clamp at the ground-speed-control coil (Figure 195 and Figure 196).

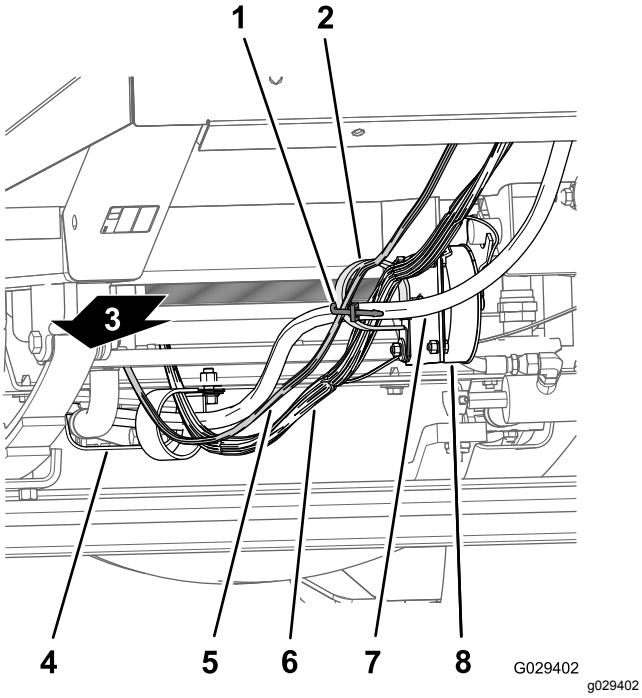

Figure 195

1. Cable tie
2. R-clamps
3. Back of the machine
4. Engine-heat shield
5. 240 cm (94-1/2 inches)—dash panel branch
6. Wire harness for the machine
7. Steering hose
8. Ground-speed-control coil

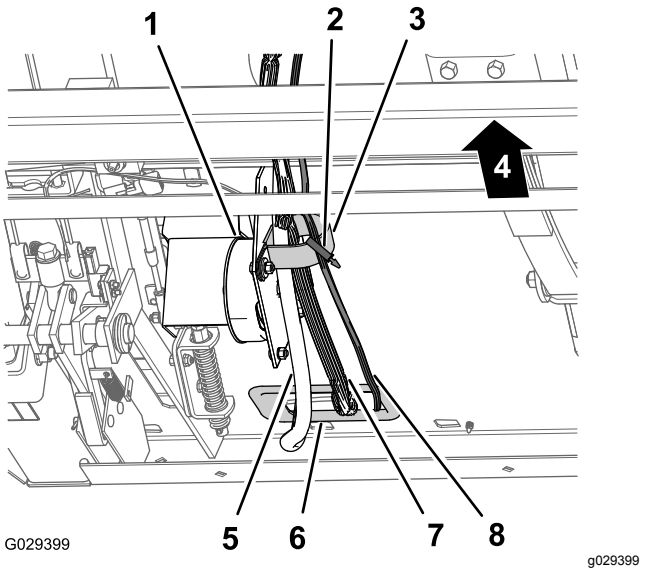

Figure 196

1. Ground-speed-control coil
2. Cable tie
3. R-clamp
4. Back of the machine
5. Steering hose
6. Grommet (forward bulkhead)
7. Wire harness for the machine
8. 240 cm (94-1/2 inches)—dash panel branch

2. Route the 240 cm (94-1/2 inches) dash panel branch of the wire harness to the R-clamp at the ground-speed-control coil (Figure 195 and Figure 196).
3. Route the 240 cm (94-1/2 inches) dash panel branch of the wire harness through the grommet at the opening in the forward bulkhead and inboard of the cable and hose hook (Figure 197).

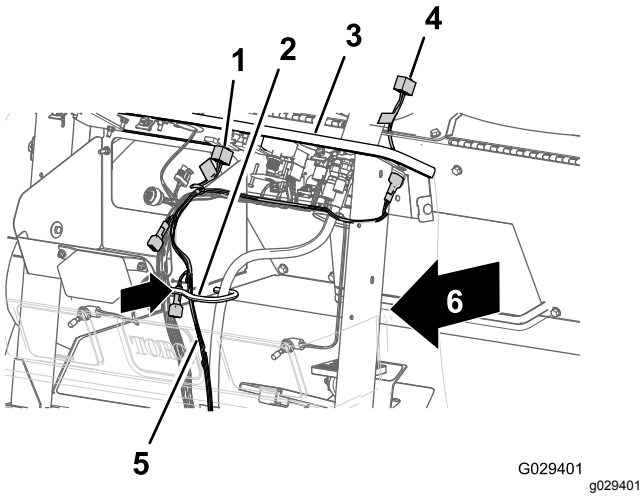

Figure 197

1. 8-socket connector (compressor switch)
2. Cable and hose hook
3. Dash panel
4. 8-socket connector (wire harness for the finishing kit)
5. 240 cm (94-1/2 inches)—dash panel branch
6. 8-socket connector (foam-control switch)

4. Route the 8-socket connector at the end of the 240 cm (94-1/2 inches) dash panel branch across the dash panel and to the left of the steering column (Figure 198).

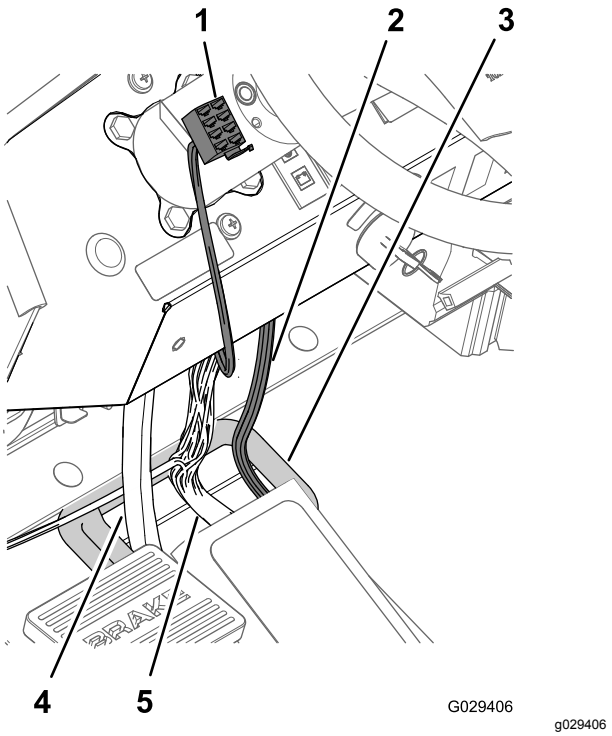

Figure 198

1. 8-socket connector (wire harness for the finishing kit)
2. 240 cm (94-1/2 inches)—dash panel branch
3. Grommet (forward bulkhead)
4. Steering hose
5. Wire harness for the machine

5. Adjacent to the cable and hose hook, secure the 240 cm (94-1/2 inches) dash panel branch to the wire harness for the machine with a cable tie (Figure 199).

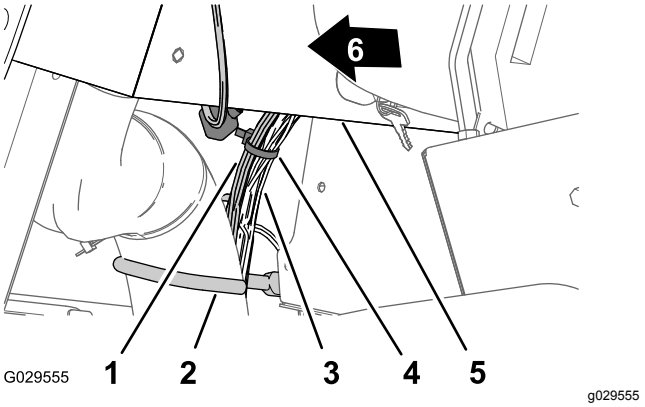

Figure 199

1. 240 cm (94-1/2 inches)—dash panel branch
2. Cable and hose hook
3. Wire harness for the machine
4. Cable tie
5. Dash panel
6. Front of the machine

Connecting the Compressor Wire Harness

1. At the end of the 236 cm (93 inches) branch of the wire harness, align the 4-socket connector of the wire harness for the finishing kit with the 4-pin connector of the wire harness from the compressor (Figure 200).

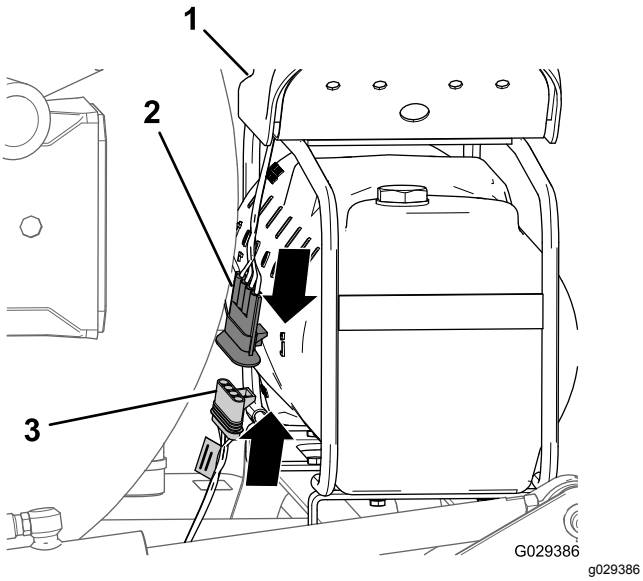

Figure 200

1. Compressor
2. 4-pin connector (wire harness for the compressor)
3. 4-socket connector (wire harness for the finishing kit)

2. Insert the 4-pin connector into the 4-socket connector (Figure 200).

   Note: Press the connectors together until the latch snaps securely.

Installing the Relay

1. At the 197 cm (77-1/2 inches) engine-compartment branch of the wire harness, align the relay with the 5-socket connect of the wire harness for the finishing kit (Figure 201).

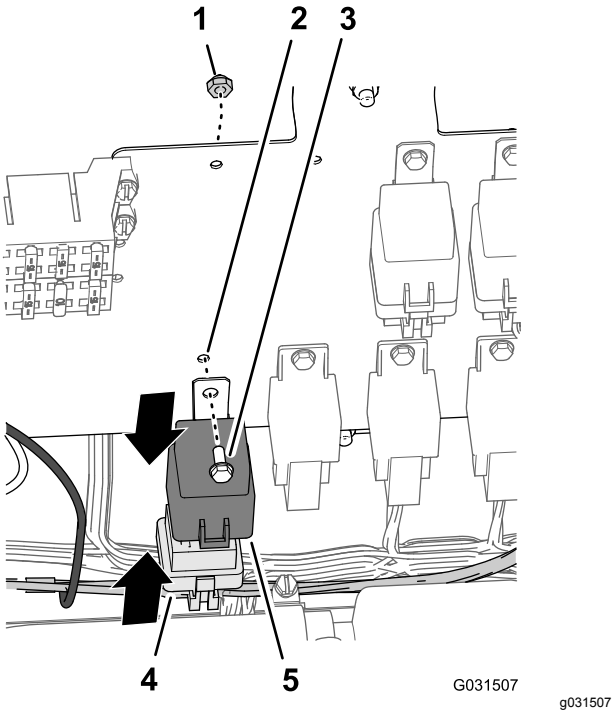

Figure 201

1. Locknut (#10)
2. Hole (wiring panel)
3. Flange-head bolt (#10-24 x 1/2 inch)
4. Relay
5. 5-socket connect (wire harness for the finishing kit)

2. Insert the pins of the relay into the sockets of the connector (Figure 201).

   Note: Press the relay and connector together until the latch snaps securely.

3. Align the hole in the mounting tab of the relay with the hole in the wiring panel (Figure 201).
4. Secure the relay to the panel (Figure 201) with the flange-head bolt (#10 x 1/2 inch) and locknut (#10).

Connecting the Ground-Wire Terminal

1. Remove a screw from the ground-terminal block (Figure 202).

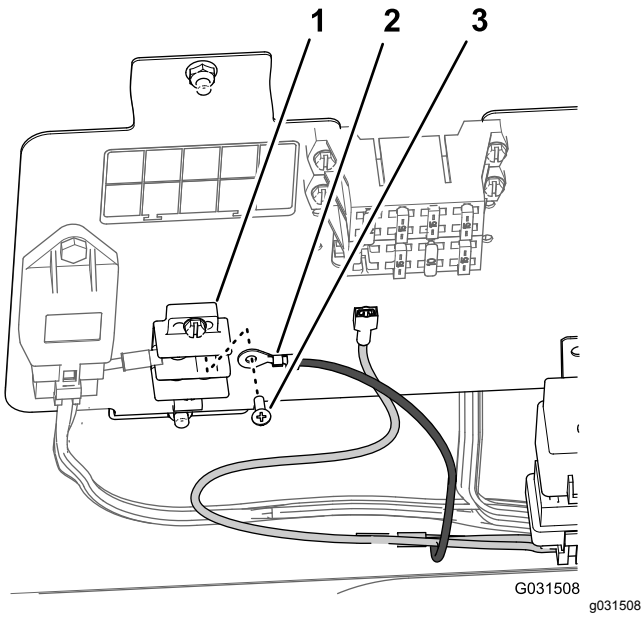

Figure 202

1. Ground-terminal block
2. Ring terminal (ground)
3. Screw

2. Secure the ring terminal of the wire harness for the finishing kit to the ground-terminal block with the screw that you removed in step 1 (Figure 202).

Connecting the Load Wire Connectors—Machine Fuse Block

Note: If you do not have a bladed-attachment connector at the fuse block for the machine available, you will need to install an auxiliary-fuse block.

1. For a machine with the bladed-attachment connector at the fuse block for the machine, connect the blade connector of the wire harness for the finishing kit to the socket connector of the fuse block for the machine (Figure 203).

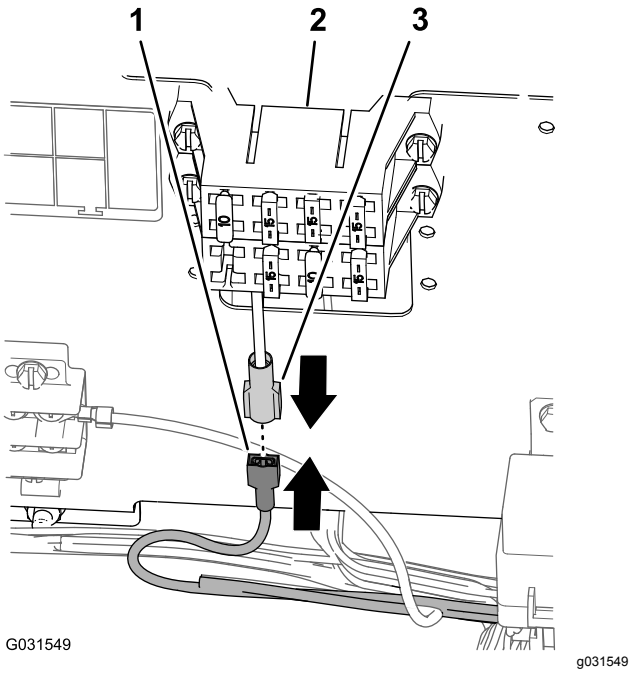

Figure 203

1. Blade connector (wire harness for the finishing kit)
2. Fuse block (machine)
3. Socket connector (fuse block for the machine)

2. Press the connectors together until the latch snaps securely.

Connecting the Load Wire Connectors

Optional Auxiliary-Fuse Block

1. Connect the blade connector of the wire harness for the finishing kit to the socket connector of the auxiliary-fuse block (Figure 204).

   Note: Press the connectors together until the latch snaps securely.

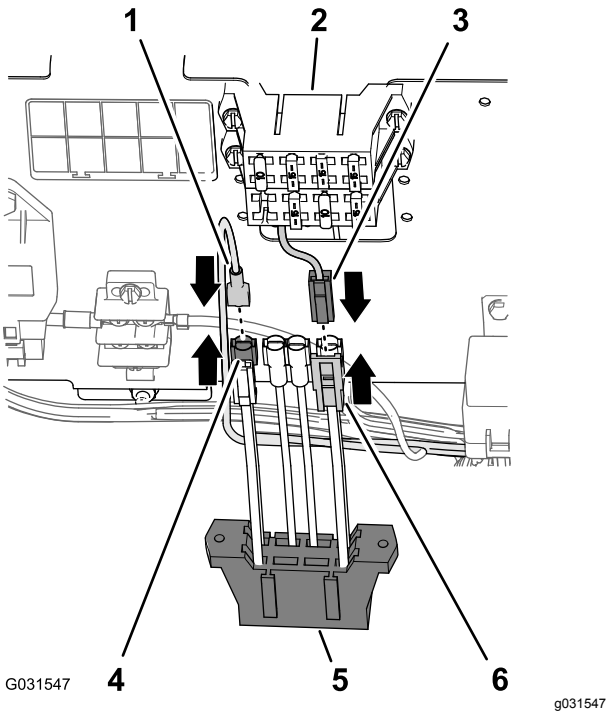

Figure 204

1. 1–socket connector (wire harness for the finishing kit)
2. Fuse block (machine)
3. 1-blade connector (square end—auxiliary-fuse block)
4. 1-pin connector (auxiliary-feed wires, fuse block for the machine)
5. Auxiliary fuse block
6. 1-socket connector (square end—feed wires of the auxiliary-fuse block)

2. Connect the 2-pin connector for the auxiliary-feed wires of the fuse block for the machine to the 2-socket connector for the feed wires of the auxiliary-fuse block (Figure 204).

   Note: Press the connectors together until the latch snaps securely.

3. Align the slots in the auxiliary-fuse block with the mounting flanges of the fuse block of the machine (Figure 205).

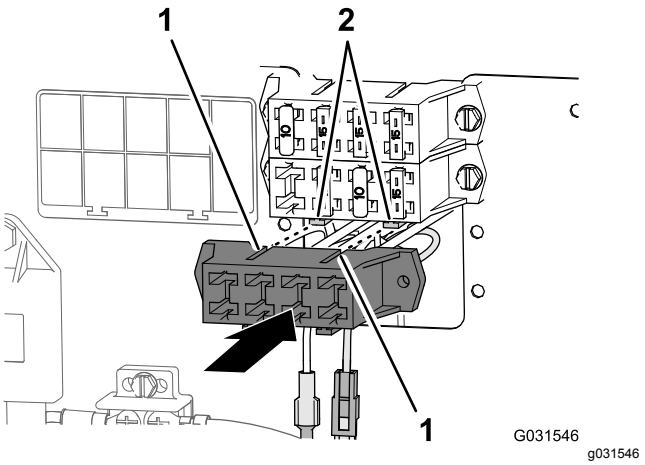

Figure 205

1. Slots (auxiliary-fuse block)
2. Mounting flanges (fuse block of the machine)

4. Assemble the fuse blocks together until the latch snaps securely.

Installing the Fuse

- For a machine with the bladed-attachment connector at the fuse block for the machine, install the 15 A fuse into the fuse block (Figure 206).

  Note: Ensure that the fuse is fully seated into the socket of the fuse block.

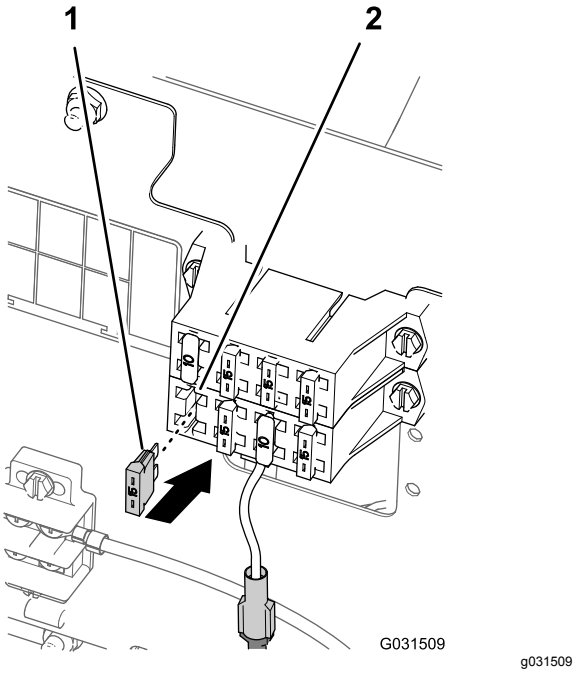

Figure 206

1. 15 A fuse
2. Fuse block for the machine

- For a machine with a bladed attachment connector at the optional auxiliary-fuse block, perform the following:

1. Locate the fuse socket that is aligned with the wire of the blade connector that you used in step 1 of Connecting the Load Wire Connectors (page 93).
2. Install the 15 A fuse into the socket that you located in the auxiliary-fuse block (Figure 207).

   Note: Ensure that the fuse fully seats into the socket of the fuse block.

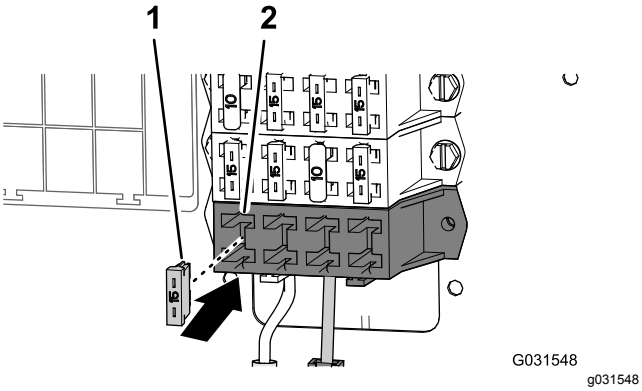

Figure 207

1. 15 A fuse
2. Fuse socket (auxiliary-fuse block)

Installing the Foam-Control Switch

1. Align the slots in the mounting bracket for the foam-control switch with the 4 threaded inserts in the steering column (Figure 208).

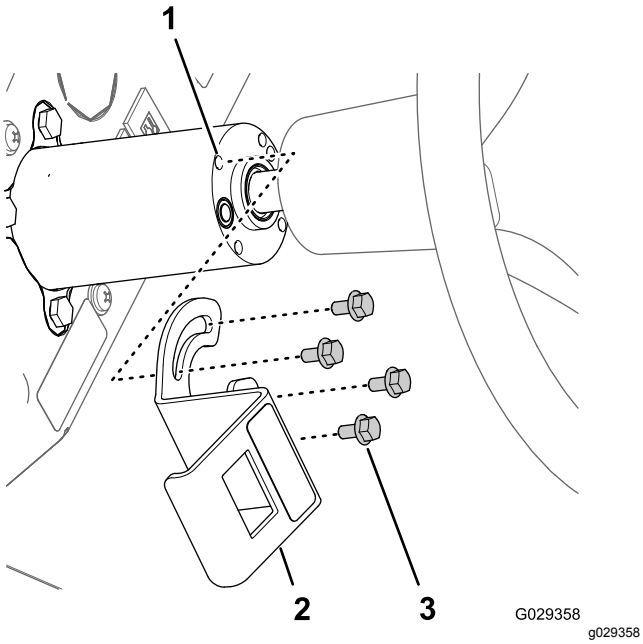

Figure 208

1. Threaded inserts (steering column)
2. Mounting bracket (foam-control switch)
3. Flange-head bolts (6 x 12 mm)

2. Assemble the bracket to the column with the 4 flange-head bolts (6 x 12 mm) and torque the bolts to 972 to 1198 N·cm (86 to 106 in-lb).
3. Align the 8-socket connector through the opening in the bracket and connect the connector to the pins (Figure 208) at the back of the 3-position paddle switch (foam-control switch).

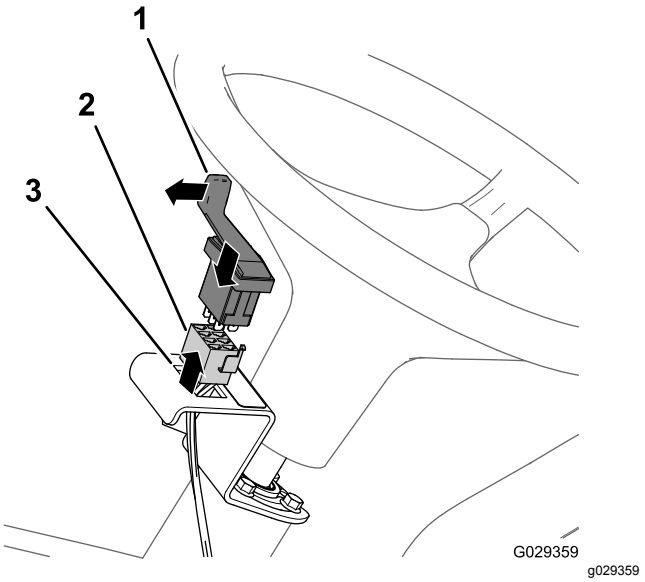

Figure 209

1. 3-position paddle switch (foam-control switch)
2. 8-socket connector
3. Opening (mounting bracket for the foam-control switch)

4. Assemble the switch into the bracket and press in the switch until it snaps securely into the opening (Figure 209).

   Note: Ensure that the paddle for the 3-position paddle switch (foam-control switch) is aligned outward.

Installing the Compressor Switch

1. Remove the fifth plug to the right in the dash panel of the machine (Figure 210).

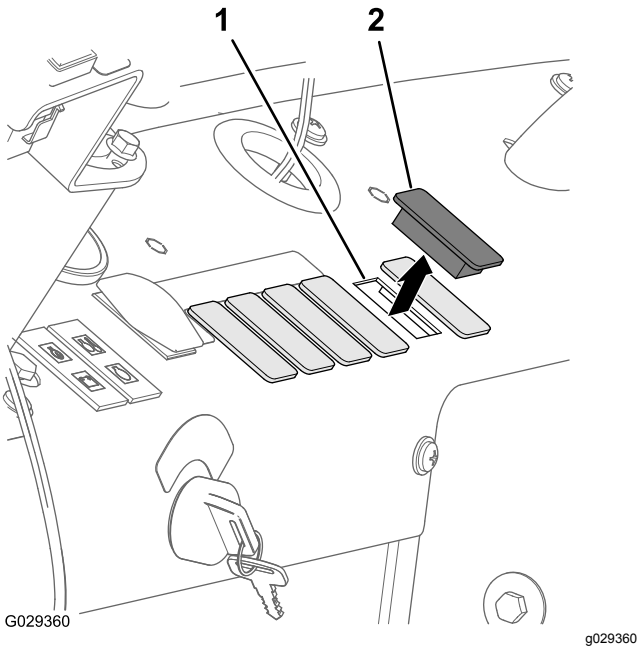

Figure 210

1. Dash opening (fifth plug to the right)
2. Plug

2. Align the 8-socket connector through the opening in the dash panel and connect the connector (Figure 211) to the pins at the back of the 2-position rocker switch (compressor on/off switch).

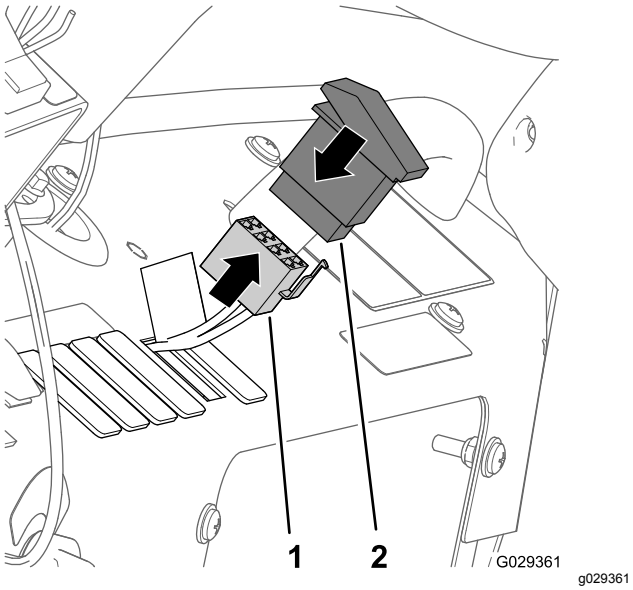

Figure 211

1. 8-socket connector
2. 2-position rocker switch (compressor on/off switch)

3. Assemble the switch into the dash panel and press in the switch until the it snaps securely into the opening (Figure 210 and Figure 211).

Connecting the Tubing for the Foam-Marker Nozzles

1. Route the tubes for the foam nozzles at the left and right boom section inboard and through the R-clamp near the pivot point for the boom section (Figure 212).

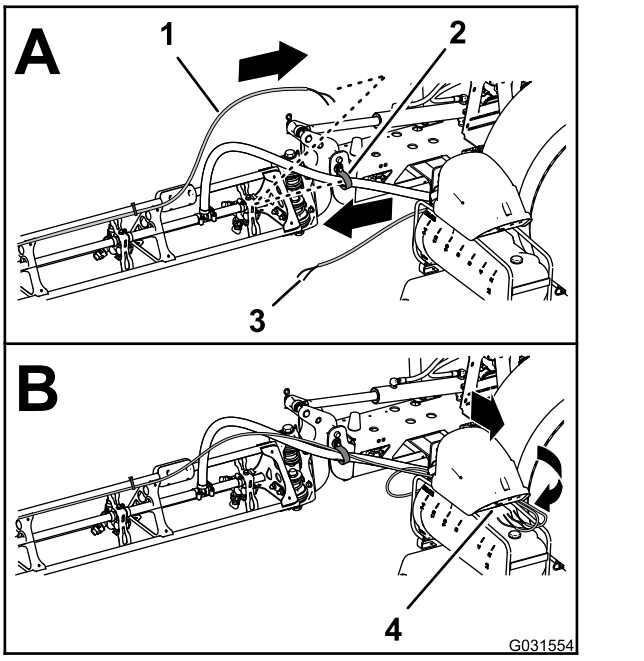

Figure 212

1. Tubing—foam-marker nozzle (right boom section)
2. R-clamp
3. Tubing—foam-marker nozzle (left boom section)
4. Connection panel (foam-marker compressor)

2. Route the tubes forward along the inboard side of the compressor for the tank (Figure 212).
3. Connect the tubing with the cable tie that you installed in step 1 of Removing the Liquid and Air Tubes from the Machine (page 16) by aligning the blue tube for the right boom section onto the compression fitting for the right boom section water circuit (Figure 213).

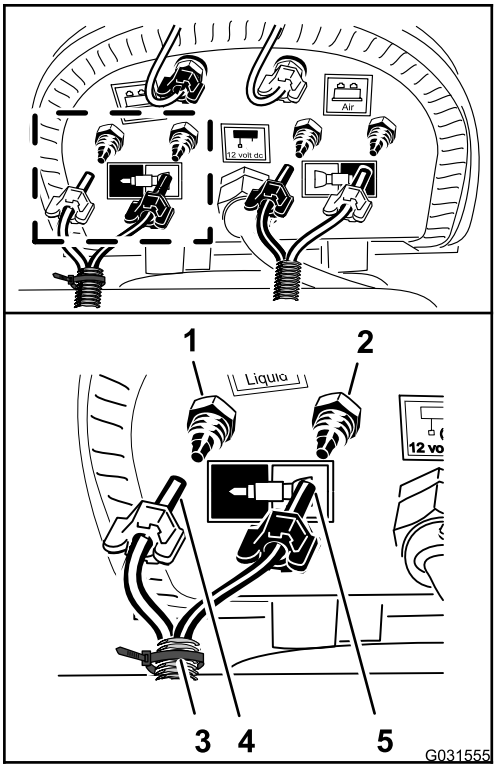

g031555

Figure 213

1. Compression fitting—water (right boom section—blue tube)
2. Compression fitting—air (right boom section—clear tube)
3. Compression nut—air (right boom section—blue tube)
4. Cable tie
5. Compression nut—water (right boom section—clear tube)

4. Assemble the compression nut for the tube onto the fitting and tighten the nut by hand (Figure 213).
5. Aligning the clear tube for the right boom section onto the compression fitting for the right boom section air circuit (Figure 213).
6. Assemble the compression nut for the tube onto the fitting and tighten the nut by hand (Figure 213).
7. Connect the unmarked (no cable tie) tubing by aligning the blue tube for the left boom section onto the compression fitting for the left boom section water circuit (Figure 214).

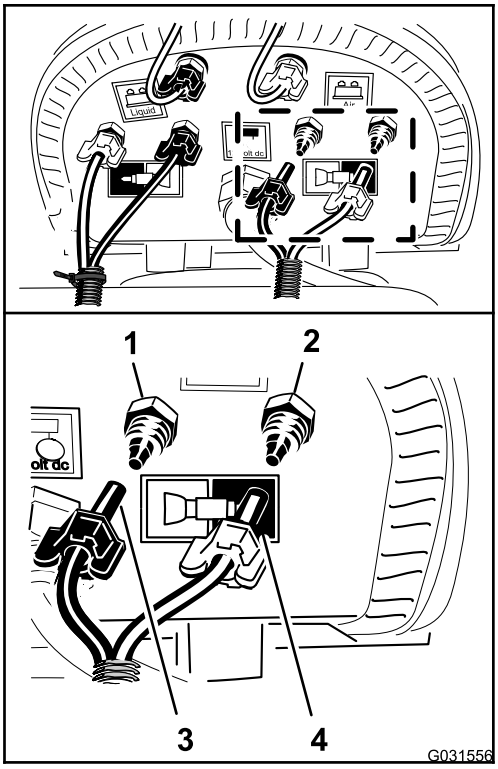

g031556

Figure 214

1. Compression fitting—water (left boom section—blue tube)
2. Compression fitting—air (left boom section—clear tube)
3. Compression nut (left boom section—blue tube)
4. Compression nut (left boom section—clear tube)

8. Assemble the compression nut for the tube onto the fitting and tighten the nut by hand (Figure 214).
9. Aligning the clear tube for the left boom section onto the compression fitting for the left boom section air circuit (Figure 214).
10. Assemble the compression nut for the tube onto the fitting and tighten the nut by hand (Figure 214).

36

Connecting the Optional Chemical Pre-Mix Kit

Parts needed for this procedure:

1	Fluid-shutoff valve—Toro Part No. 130-7324
2	Retainer—Toro Part No. 131-0235
1	Mount (fluid-shutoff valve)—Toro Part No. 131-3725-03
2	Flange locknut (1/4 inch, stainless steel)—Toro Part No. 119-6897
1	Pressure relief-hose assembly 25 x 273 mm (1 x 10-3/4 inches)—Toro Part No. 131-9647
1	Supply-hose assembly 25 x 470 mm (1 x 18-1/2 inches)—Toro Part No. 131-9648
1	Agitation bypass-hose assembly 25 x 305 mm (1 x 12 inches)—Toro Part No. 131-9649
1	90° barb fitting 25 mm (1 inch)—Toro Part No. 131-3727
1	Drain hose 25 x 1587 mm (1 x 62-1/2 inches)—Toro Part No. 117-7957

Repositioning the Pressure-Relief Valve

1. Remove the retainer that secures the straight barbed fitting of the supply hose to the T-fitting at the sprayer pump and remove the straight fitting from the T-fitting (Figure 215).

   Note: Retain the retainer for installation in step 2 of Installing the Supply-Hose Assembly (page 101).

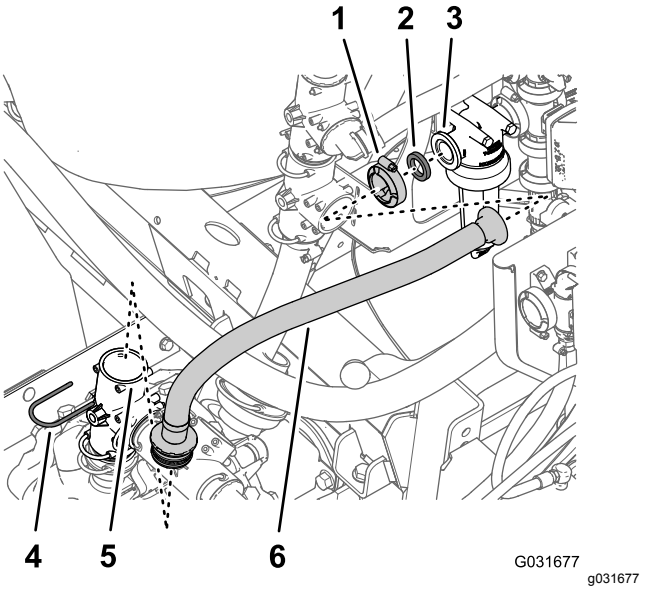

Figure 215

1. Flange clamp
2. Gasket
3. Flange (filter head)
4. Retainer
5. T-fitting (sprayer pump)
6. Supply hose

2. Remove the flange clamp that secures the supply hose and gasket to the flange of the filter head and remove the hose from the machine (Figure 215).
3. Remove the retainer that secures the pressure-relief valve to the T-fitting at the sprayer pump as remove the relief valve (Figure 216).

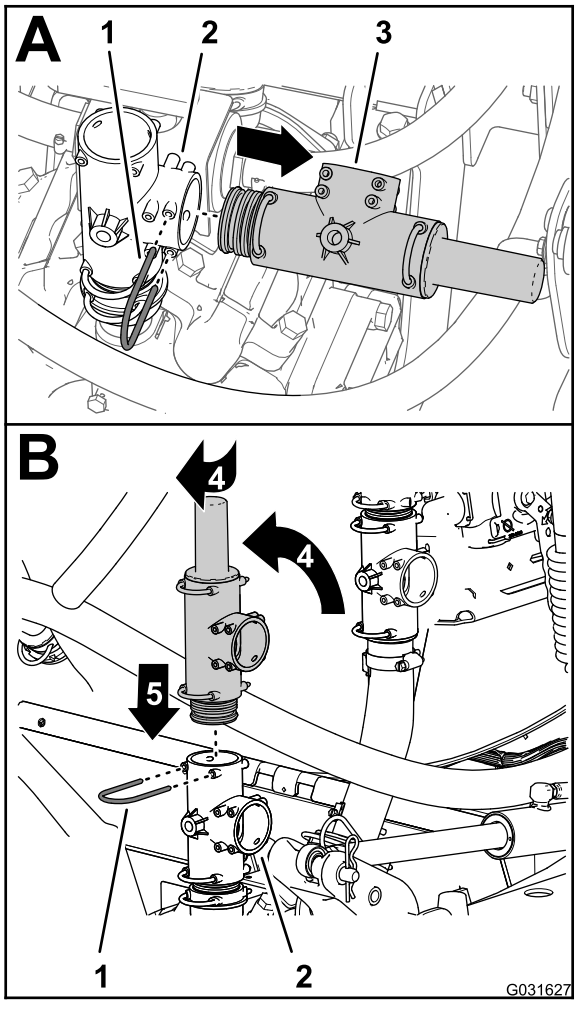

Figure 216

1. Retainer
2. Pressure-relief valve
3. T-fitting
4. Rotate the pressure-relief valve
5. Down

4. Rotate the pressure relief valve up as shown in Figure 216.

   Note: Align outlet of the pressure-relief valve rearward.

5. Insert the pressure-relief valve into the top of the T-fitting until the valve is fully seated (Figure 216).

6. Secure the pressure-relief valve to the T-fitting with the retainer that you removed in step 3.

Replacing the Bypass Hose for the Agitation Valve

1. Remove the retainer that secures the 90° barbed fitting for the bypass hose to the upper T-fitting and remove the 90° fitting from the T-fitting (Figure 217).

   Note: Retain the retainer for installation in a later step 5.

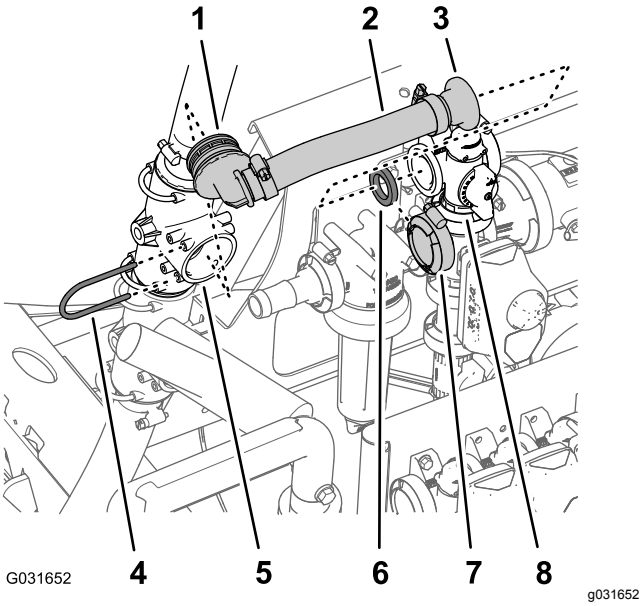

Figure 217

1. 90° barbed fitting
2. Bypass hose
3. Straight flange fitting
4. Retainer
5. Upper T-fitting
6. Gasket
7. Flange clamp
8. Flange (agitation valve)

2. Remove the flange clamp that secures the straight flange fitting and gasket to the flange of the agitation valve, and remove the bypass hose from the machine (Figure 217).

   Note: Retain the flange clamp and gasket for installation step 7; you no longer need the old 90° fitting, bypass hose, and straight flange fitting that you removed from the machine.

3. Rotate the upper T-fitting approximately 45° clockwise (Figure 218).

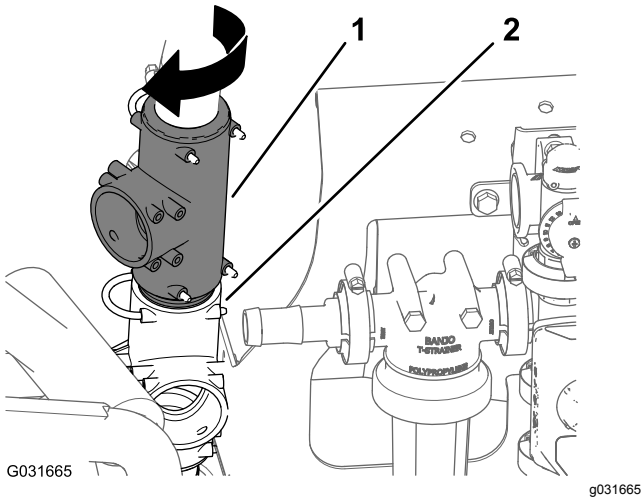

Figure 218

4. Align the 90° barbed fitting of the new agitation bypass-hose assembly (Toro Part No. 131-9649) with the open port in the upper T-fitting and insert the 90° fitting until it is seated in the T-fitting (Figure 219).

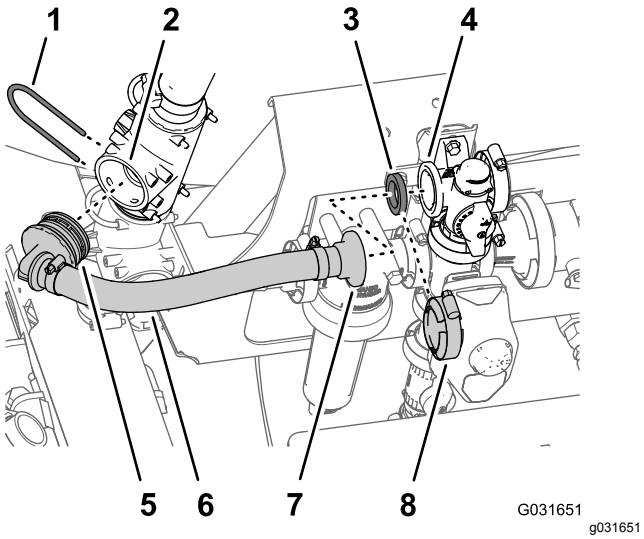

Figure 219

1. Retainer
2. Port (upper T-fitting)
3. Gasket
4. Flange (agitation valve)
5. 90° barbed fitting (agitation bypass-hose assembly—Toro Part No. 131-9649)
6. Hose 25 x 305 mm (1 x 12 inches)—(agitation bypass-hose assembly—Toro Part No. 131-96499)
7. Straight flange fitting (agitation bypass-hose assembly—Toro Part No. 131-9649)
8. Flange clamp

5. Secure the 90° barbed fitting to the T-fitting with the retainer (Figure 219) that you removed in step 1.
6. Align the straight flange fitting of the new agitation bypass-hose assembly (Toro Part No. 131-9649) and the gasket with the flange of the bypass valve (Figure 219).
7. Secure the straight flange fitting and gasket to the bypass valve with the flange clamp that you removed in step 2.

Preparing to Install the Fluid-Shutoff Valve for the Eductor

1. Align the 90° barb fitting (Toro Part No. 131-3727) to the fluid-shutoff valve (Toro Part No. 130-7324) as shown in Figure 220 and insert the barbed fitting into the valve until the fitting fully seats.

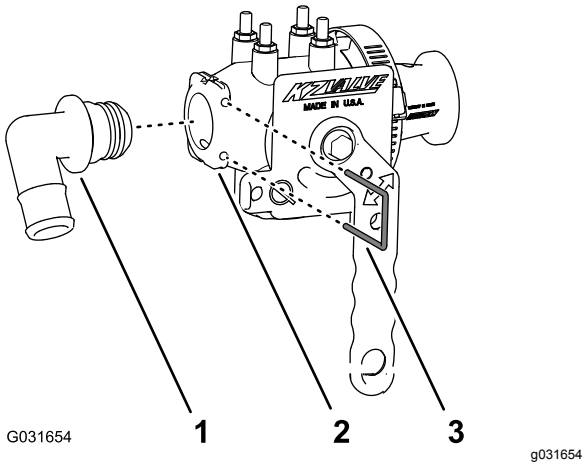

Figure 220

1. 90° barb fitting 25 mm (1 inch)—Toro Part No. 131-3727
2. Fluid-shutoff valve—Toro Part No. 130-7324
3. Retainer—Toro Part No. 131-0235

2. Secure the 90° barb fitting to the fluid-shutoff valve with a retainer (Toro Part No. 131-0235).
3. Remove the flange clamp that secures the straight-barbed fitting and gasket to the flange of the filter head and remove the fitting (Figure 221).

   Note: Retain the flange clamp and gasket for installation of the fluid-shutoff valve in step 5 of Installing the Fluid-Shutoff Valve for the Eductor (page 100); you no longer need the straight-barbed fitting that you removed from the machine.

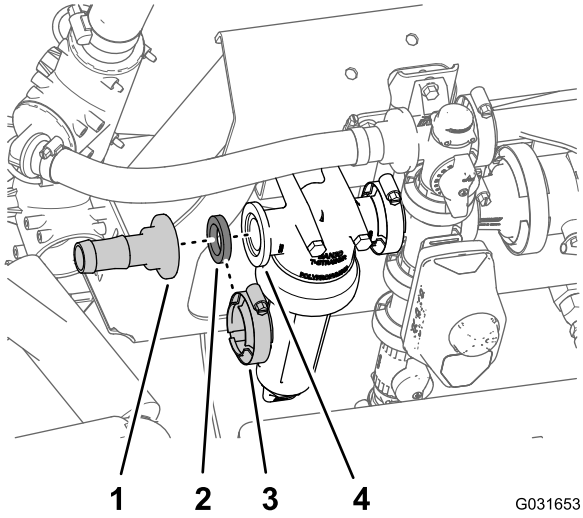

Figure 221

1. Straight-barbed fitting
2. Gasket
3. Flange clamp
4. Flange (filter head)

4. Remove the 2 flange locknuts (5/16 inch) that secure the filter head to the manifold mount (Figure 222).

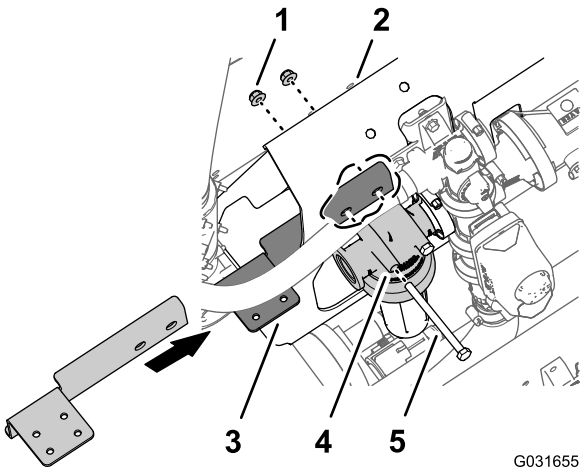

Figure 222

Bolt (5/16 x 4 inches) shown removed for illustrative purposes.

1. Flange locknut (5/16 inch)
2. Manifold mount
3. Mount (fluid-shutoff valve)—Toro Part No. 131-3725-03
4. Filter head
5. Bolt (5/16 x 4 inches)

5. Align the holes in the long flange of shutoff-valve mount (Toro Part No. 131-3725-03) to the 2 bolt (5/16 x 4 inches) at the front side of the manifold mount (Figure 222).
6. Attach the shutoff-valve mount to the manifold mount and bolts with 2 flange locknut that you removed in step 4 (Figure 222).
7. Torque the bolts and nuts 1978 to 2542 N·cm (175 to 225 in-lb).

Installing the Fluid-Shutoff Valve for the Eductor

1. Align the gasket to the flange of the filter head (Figure 223).

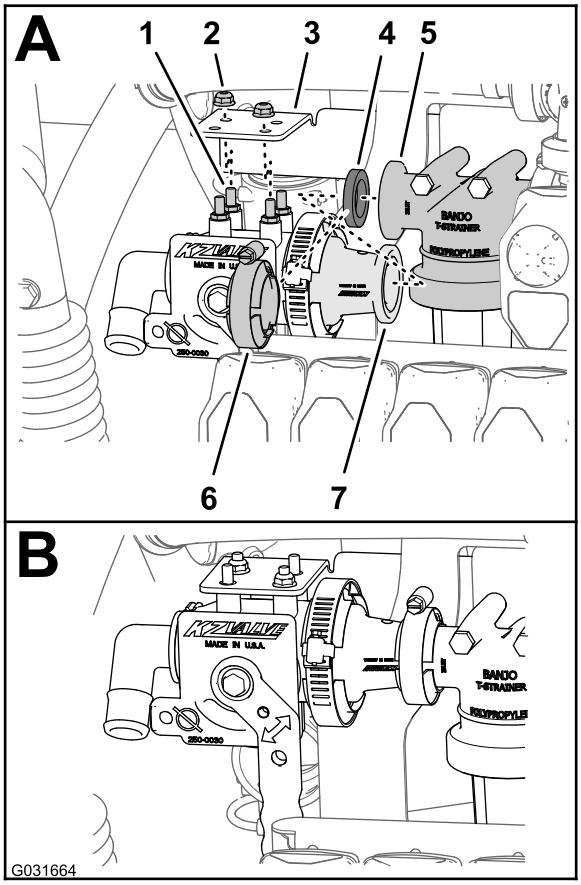

Figure 223

1. Stud (fluid-shutoff valve—Toro Part No. 130-7324)
2. Flange locknut (1/4 inch, stainless steel)—Toro Part No. 119-6897
3. Mount (fluid-shutoff valve)—Toro Part No. 131-3725-03
4. Gasket
5. Flange (filter head)
6. Flange clamp
7. Flange—adapter (fluid-shutoff valve—Toro Part No. 130-7324)

2. Align the studs of the fluid-shutoff valve (Toro Part No. 130-7324) with the 4 holes in the shutoff-valve mount (Toro Part No. 131-3725-03) and the flange adapter of the fluid-shutoff valve with the flange of the filter head and gasket (Figure 223).
3. Assemble the fluid-shutoff valve to the shutoff-valve mount with 2 flange locknut (1/4 inch)—Toro Part No. 119-6897 at 2 diagonally

aligned studs of the fluid-shutoff valve as shown in Figure 223.

4. Torque the flange locknut (1/4 inch) to 1070 to 1243 N·cm (90 to 110 in-lb).
5. Secure the flange adapter of the fluid-shutoff valve to the flange of the filter head with the clamp (Figure 223) that you removed in 3 of Preparing to Install the Fluid-Shutoff Valve for the Eductor (page 99).

Installing the Pressure Relief-Hose Assembly

1. Align the 90° fitting of the pressure relief-hose assembly (Toro Part No. 131-9647) with the open port of the pressure-relief valve and insert the 90° fitting until it is seated in the T-fitting (Figure 224).

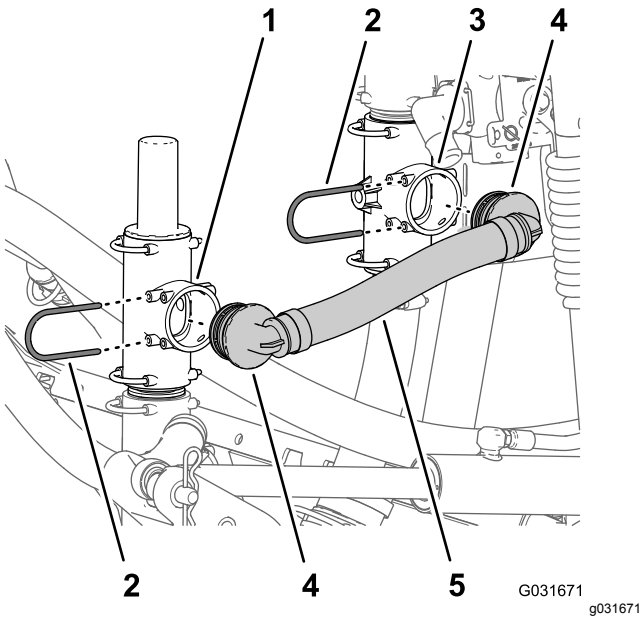

Figure 224

1. Pressure-relief valve
2. Retainer
3. Lower T-fitting
4. 90° barbed fitting (pressure relief-hose assembly—Toro Part No. 131-9647)
5. Pressure relief-hose—Toro Part No. 131-9647

2. Secure the 90° fitting to the pressure-relief valve with the retainer (Figure 224) that you removed in step 1 of Installing the Pivoting Hose Reel to the Manifold Mount (page 83).
3. Align the other 90° fitting of the pressure relief-hose assembly (Toro Part No. 131-9647) with the open port of the lower T-fitting and insert the 90° fitting until it is seated in the T-fitting (Figure 224).
4. Secure the 90° fitting to the upper T-fitting with the retainer (Figure 224) that you removed in step 2 of Installing the Pivoting Hose Reel to the Manifold Mount (page 83).

Installing the Supply-Hose Assembly

1. Align the other 90° fitting of the supply-hose assembly (Toro Part No. 131-9648) with the open port of the T-fitting at the sprayer pump and insert the 90° fitting until it is seated in the T-fitting (Figure 225).

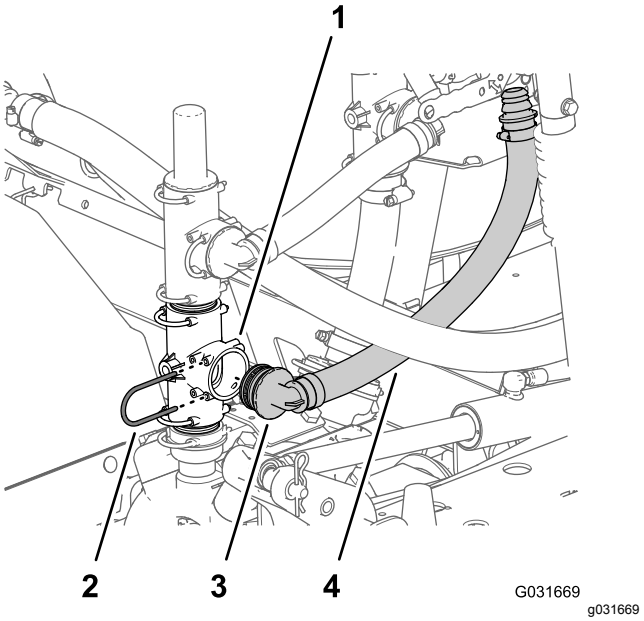

Figure 225

1. T-fitting (sprayer pump)
2. Retainer—Toro Part No. 131-0235
3. 90° barbed fitting (supply-hose assembly—Toro Part No. 131-9648)
4. Supply-hose assembly—Toro Part No. 131-9648

2. Secure the 90° fitting to the T-fitting at the sprayer pump with the retainer (Figure 225) that you removed in step 1 of Repositioning the Pressure-Relief Valve (page 97).
3. Align the other 90° fitting of the pressure-hose assembly (Toro Part No. 131-9648) with the open port of the T-fitting at the sprayer pump and insert the 90° fitting until it seats in the T-fitting (Figure 226).

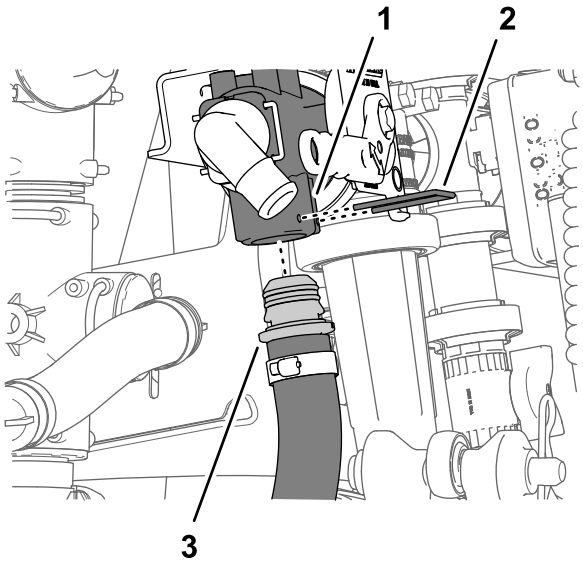

Figure 226

1. Fluid-shutoff valve—Toro Part No. 130-7324
2. Retainer—Toro Part No. 131-0235
3. Supply-hose assembly—Toro Part No. 131-9648

4. Align the straight-barbed fitting of the pressure-hose assembly (Toro Part No. 131-9648) with the bottom port of the fluid-shutoff valve and insert the straight fitting until it seats in the valve (Figure 226).
5. Secure the straight-barbed fitting to the fluid-shutoff valve (Figure 224) with a retainer (Toro Part No. 131-0235).

Connecting the Eductor-Supply Hose

1. Align the free end of the eductor-supply hose to the 90° barbed fitting of the fluid-shutoff valve and install the hose over the fitting (Figure 227).

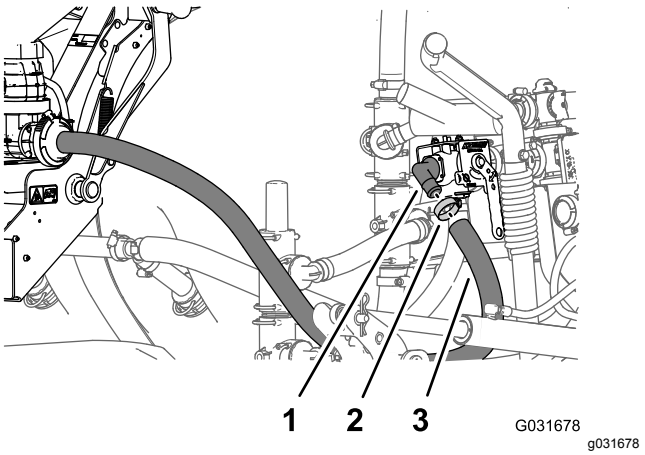

Figure 227

1. 90° barbed fitting (fluid-shutoff valve—Toro Part No. 130-7324)
2. Hose clamp
3. Eductor-supply hose

2. Secure the hose to the fitting with the hose clamp that you removed in step 7 of Installing the Pivoting Hose Reel to the Manifold Mount (page 83).

37

Connecting the Optional EU Compliance Kit

No Parts Required

Drilling the Manifold Mount

1. At the top-left edge of the manifold mount, measure 381 mm (15 inches) to the right, and mark the manifold mount with a pencil (Figure 228).

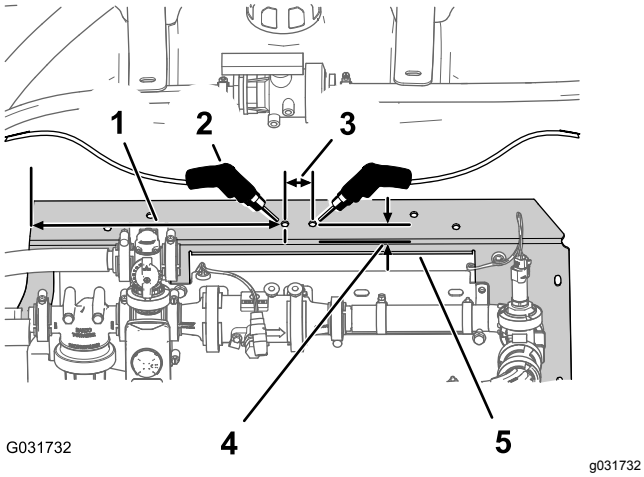

Figure 228

1. Measure 381 mm (15 inches) and mark with a pencil.
2. 8 mm (5/16 inch) hole
3. Measure 32 mm (1-1/4 inches) and mark with a pencil.
4. Measure 19 mm (3/4 inch) and mark with a pencil.
5. Manifold mount

2. At the rear edge of the manifold mount, measure 19 mm (3/4 inch) forward, and mark the manifold mount with a pencil (Figure 228).
3. At the intersection of the 2 marks that you made in steps 1 and 2, center punch the horizontal surface e of the manifold mount.
4. At the center-punch mark, measure to the right 32 mm (1-1/4 inches), and mark the manifold mount with a pencil (Figure 228).
5. At the rear edge of the manifold mount, measure 19 mm (3/4 inch) forward, and mark the manifold mount with a pencil (Figure 228).
6. At the intersection of the 2 marks that you made in steps 4 and 5, center punch the horizontal surface e of the manifold mount.
7. Drill a hole in the manifold mount at each of the center-punch marks with an 8 mm (5/16 inch) drill bit (Figure 228).

Installing the Ball Valve and Mounting Bracket

1. Align the holes in the mounting bracket for the ball valve that you removed in step 4 of 9 Disconnecting the Optional EU Compliance Kit (page 22) with the holes manifold mount that you drilled in Drilling the Manifold Mount (page 102) as shown in Figure 229.

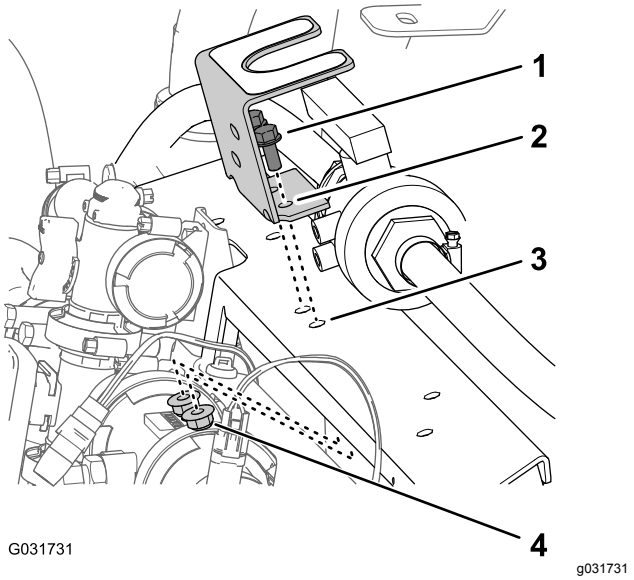

Figure 229

1. Flange-head bolts (5/16 x 3/4 inch)
2. Mounting bracket (ball valve)
3. Manifold mount
4. Flange locknut (5/16 inch)

2. Assemble the mounting bracket to the manifold mount (Figure 229) with the 2 flange-head bolts (5/16 x 3/4 inch) and flange locknuts (5/16 inch) that you removed in step 4 of 9 Disconnecting the Optional EU Compliance Kit (page 22).
3. Torque the bolts and nuts to 1978 to 2542 N·m (175 to 225 in-lb).
4. Align the threaded boss of the ball valve with the 2 holes in the mounting bracket (Figure 230).

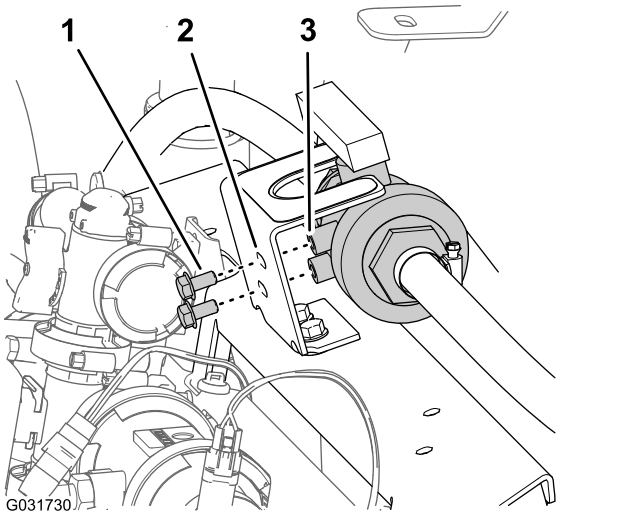

Figure 230

1. Flange-head bolt (5/16 x 5/8 inch)
2. Mounting bracket (ball valve)
3. Threaded boss (ball valve)

5. Assemble the valve to the mounting bracket (Figure 230) with the 2 flange-head bolts (5/16 x 5/8 inch) that you removed in step 3 of 9 Disconnecting the Optional EU Compliance Kit (page 22), and tighten the bolts by hand.

38

Assembling the Optional Covered Boom Kit

Parts needed for this procedure:

1	Cover extension assembly (12-nozzle—Toro Part No. 120-0621)
22	Pop rivet (Toro Part No. 114439)
4	Support bracket (center section cover—Toro Part No. 131–3703–03)
4	Clip nut (Toro Part No. 94-2413)
16	Flange-head bolt (3/8 x 1-1/4 inches—Toro Part No. 110-5050)
16	Flange locknut (3/8 inch—Toro Part No. 104-8301)
2	Cover strap (Toro Part No. 120–0629)
4	Flange-head bolt (5/16 x 1-1/4 inches—Toro Part No. 323-36)

Installing the Cover Extension on to Center Section Cover (11 Nozzle)

1. Using a drill with a 5 mm (3/16 inch) drill bit, drill the 11 pop rivets (Figure 231) that secure the reinforcement plate (single row) and rubber cover to the end of the 11-nozzle section cover for the center boom section that you removed in step 2 of 10 Removing the Center Section Cover (11 Nozzle) of the Optional Covered Boom Kit (page 22).

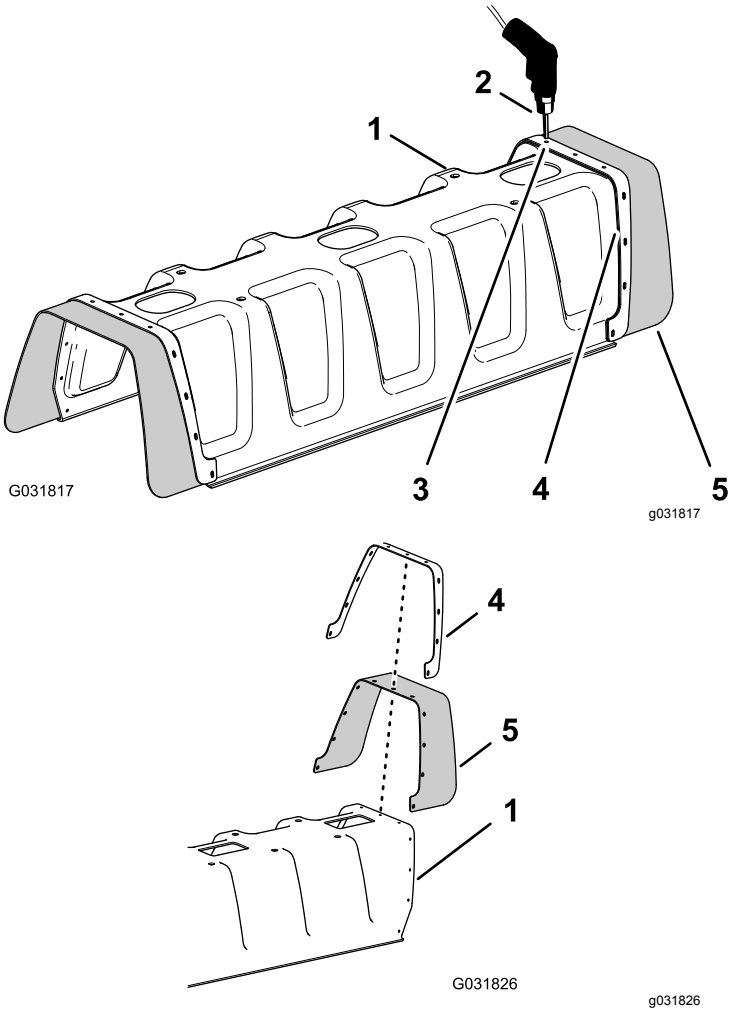

Figure 231

1. 11-nozzle section cover
2. Drill and 5 mm (3/16 inch) drill bit
3. Rivet (3/16 x 1/2 inch)
4. Reinforcement plate (single row)
5. Rubber cover

2. Remove the reinforcement plate, 11 washers (3/16 inch), and rubber cover from the 11-nozzle boom cover (Figure 231).

   Note: Retain the reinforcement plate, washers, and rubber cover for installation in steps 5 and 6.

3. Align the holes in the reinforcement plate (double row) on the cover extension with the holes in the end of the 11-nozzle boom cover (Figure 232).

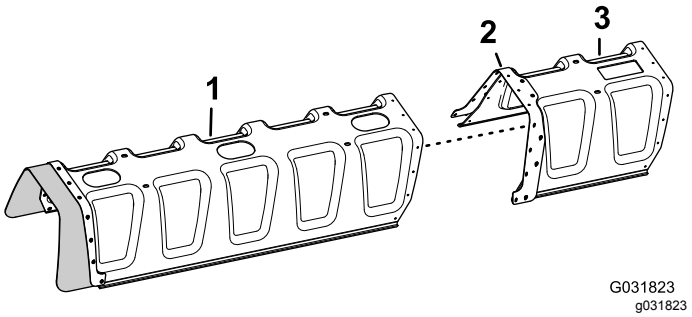

Figure 232

1. 11-nozzle section cover
2. Reinforcement plate (double row)
3. Cover extension

4. Secure the cover extension to the 11-nozzle section cover with 11 pop rivets (Toro Part No. 114439).

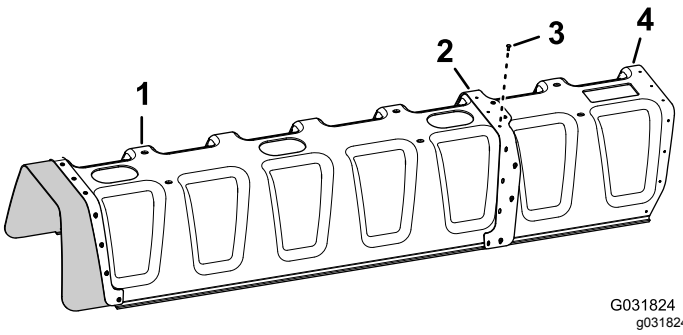

Figure 233

1. 11-nozzle section cover
2. Reinforcement plate (double row)
3. Pop rivets (Toro Part No. 114439)
4. Cover extension

5. Align the holes in the rubber cover and the reinforcement plate (single row) that you removed in step 2 with the holes in the end of the over extension (Figure 234).

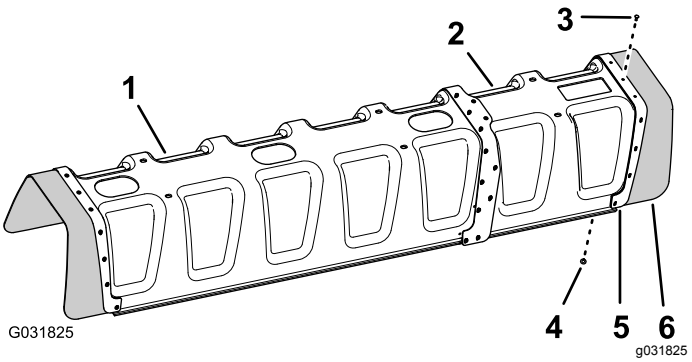

Figure 234

1. 11-nozzle section cover
2. Cover extension
3. Pop rivet (Toro Part No. 114439)
4. Washer (3/16 inch)
5. Reinforcement plate (single row)
6. Rubber cover

6. Secure the reinforcement plate and rubber cover to the cover extension with the 11 pop rivets (Toro Part No. 114439) and the 11 washers (3/16 inch) that you removed in step 5.

   Note: Align the washers (3/16 inch) against the inside surface of the cover extension.

Installing the Support Bracket for the Center Section Cover

1. Install the 4 clip nuts that you removed in step 6 of 10 Removing the Center Section Cover (11 Nozzle) of the Optional Covered Boom Kit (page 22) onto 2 of the support bracket of the center section cover (Toro Part No. 131-3703-03) as shown in (Figure 235).

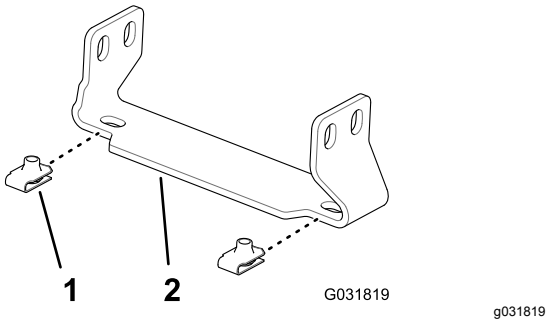

Figure 235

1. Clip nut (Toro Part No. 94-2413)
2. Support bracket (center section cover—Toro Part No. 131-3703-03)

2. Install the 4 clip nuts (Toro Part No. 94-2413) onto the 2 other support bracket of the center section cover (Toro Part No. 131-3703-03) as shown in (Figure 235).

3. At the center boom section, locate the right most pair of holes in the vertical face of the truss frame with a 25 mm (1 inch) hole spacing (Figure 236).

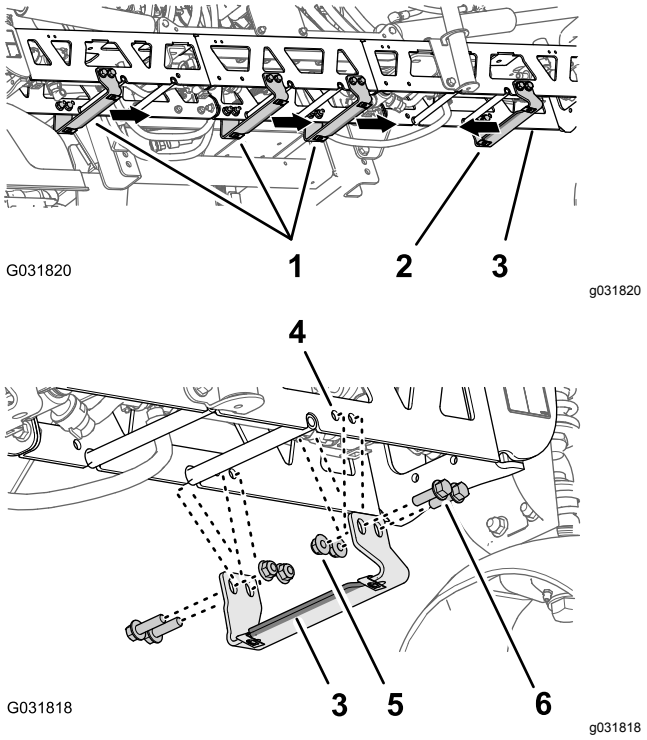

Figure 236

Support bracket with the wide flange to the left shown

1. Support bracket—Toro Part No. 131-3703-03 (wide flange to the right)
2. Support bracket—Toro Part No. 131-3703-03 (wide flange to the left)
3. Truss frame (center boom section)
4. Hole (truss frame)
5. Flange locknuts (3/8 inch—Toro Part No. 104-8301)
6. Flange-head bolts (3/8 x 1-1/4 inches—Toro Part No. 110-5050)

4. Align the holes in a support bracket (Toro Part No. 131-3703-03) to the holes in the center boom section that you identified in step 3 with the wide flange of the bracket to the left; refer to Figure 236.
5. Assemble the support bracket to the truss frame (Figure 236) with 4 flange-head bolts (3/8 x 1-1/4 inches—Toro Part No. 110-5050) and 4 flange locknuts (3/8 inch—Toro Part No. 104-8301).
6. Locate the remaining pairs of holes in the vertical face of the truss frame with a 25 mm (1 inch) hole spacing (Figure 236).
7. Align the holes in the 3 support bracket (Toro Part No. 131-3703-03) to the holes in the center boom section that you identified in step 6 with the wide flange of the bracket to the right (Figure 236).
8. Assemble the support brackets to the truss frame (Figure 236) with 12 flange-head bolts (3/8 x 1-1/4 inches—Toro Part No. 110-5050) and 12 flange locknuts (3/8 inch—Toro Part No. 104-8301).
9. Torque the nuts and bolts to 37 to 45 N·m (27 33 ft-lb).

Installing the Center Section Cover

1. Align the holes in the center section cover with the holes in the support brackets for the center section cover (Figure 237).

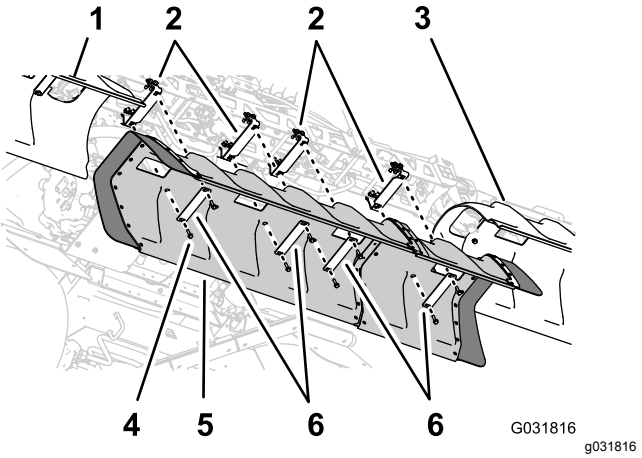

Figure 237

1. Left boom cover
2. Support brackets
3. Right boom cover
4. Flange-head bolts (5/16 x 1-1/4 inches)
5. Center boom cover
6. Cover straps

2. Align the holes in 2 of the cover straps that you removed in step 1 of10 Removing the Center Section Cover (11 Nozzle) of the Optional Covered Boom Kit (page 22) with the hose in the cover and 2 of the support brackets (Figure 237).
3. Assemble the cover straps and cover to the support brackets with the 4 flange-head bolts (5/16 x 1-1/4 inches) that you removed in step 1 of 10 Removing the Center Section Cover (11 Nozzle) of the Optional Covered Boom Kit (page 22).
4. Align the holes in the 2 cover straps (Toro Part No. 120-0629) with the 4 remaining hole in the cover and 4 remaining holes in the support brackets (Figure 237).
5. Assemble the cover straps and cover to the support brackets (Figure 237) with the 4 flange-head bolts (5/16 x 1-1/4 inches—Toro Part No. 323-36).
6. Torque the bolts to 1978 to 2542 N·cm (175 to 225 in-lb).

39

Connecting the Optional Tank-Rinse Kit

No Parts Required

Procedure

1. Connect the 6-pin connector of the rinse-pump harness from the 6-socket connector of the rear, main harness (Figure 238).

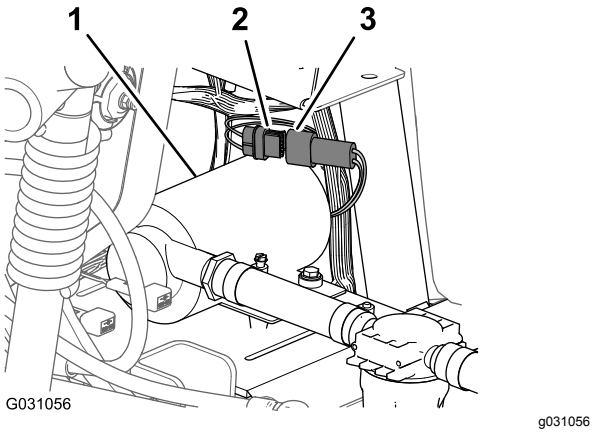

Figure 238

1. Rinse pump
2. 6-socket connector (rear, main harness)
3. 6-pin connector (rinse pump harness)

2. Align the rinse-pump cover over saddle plate for the rinse pump (Figure 239).

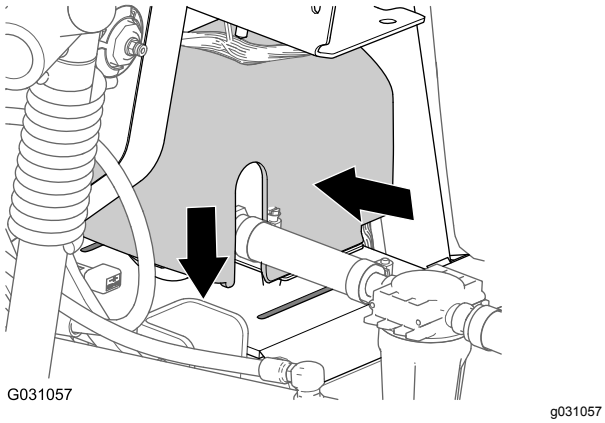

Figure 239

3. Press together the sides of the rinse-pump cover and align the tabs of the cover with the saddle plate (Figure 239).
4. Insert the tabs into the slots and release the sides of the cover (Figure 239).

40

Replacing the Alternator

Parts needed for this procedure:

1	Belt-tensioning bracket
1	Alternator (60 A)
1	Nut (10 mm)
1	Alternator adapter harness

Removing the Alternator (40 A)

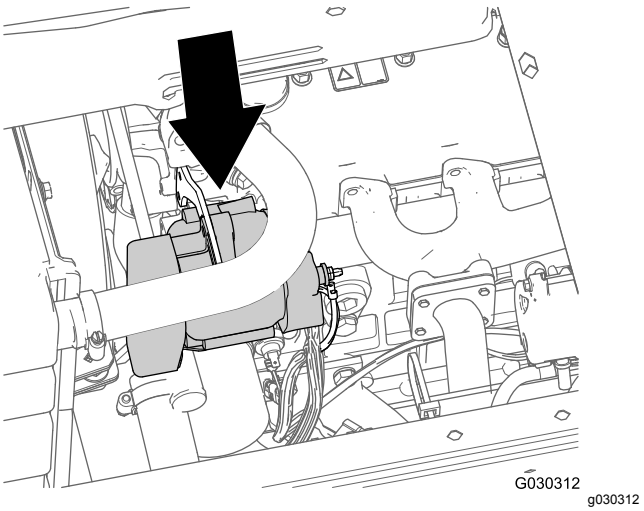

Figure 240

1. At the left side of the engine compartment, remove the nut (6 mm) that secures the ring terminal for the positive battery wire from the positive alternator post (Figure 241).

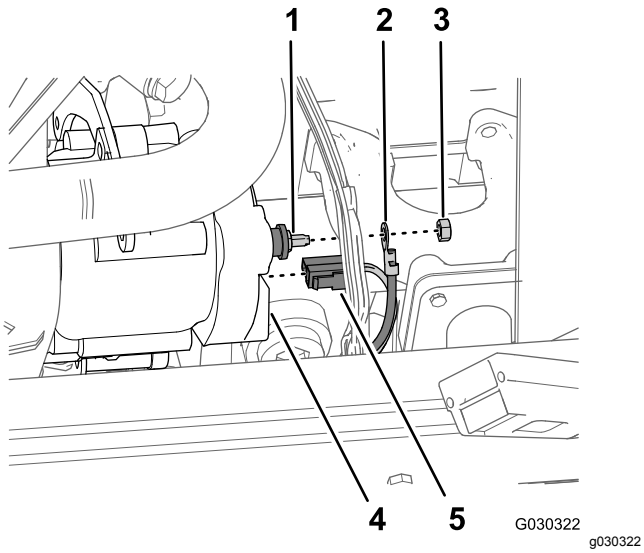

Figure 241

1. Positive alternator post
2. Ring terminal
3. Nut (6 mm)
4. Alternator
5. 2-socket connector

2. At the back of the alternator, remove the 2-socket connector of the wire harness for the engine from the 2-blade terminals at the alternator (Figure 241).
3. Remove the alternator lock bolt from the alternator and belt-tensioning bracket (Figure 242).

   Note: Retain the alternator lock bolt for installation in Installing the Alternator (60 A) (page 109).

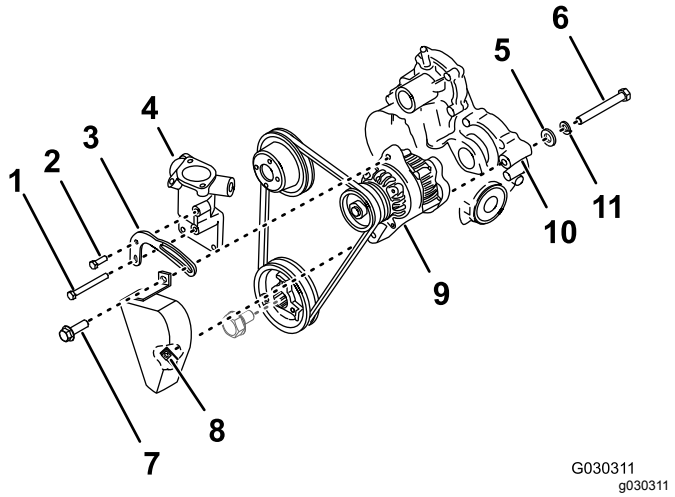

Figure 242

1. Tensioning-bracket bolt—long
2. Tensioning-bracket bolt—short
3. Belt-tensioning bracket (old)
4. Thermostat housing
5. Flat washer
6. Pivot bolt
7. Alternator-lock bolt
8. Weld nut (belt cover)
9. Alternator (40 A)
10. Gear case
11. Lock washer

4. Remove the short tensioning-bracket bolt from the thermostat housing and belt-tensioning bracket (Figure 242).

   Note: Retain the short tensioning-bracket bolt for installation in Installing the Alternator (60 A) (page 109).
5. Remove the long tensioning-bracket bolt from the cylinder head, thermostat housing, and belt-tensioning bracket, and remove the belt tensioning bracket from the machine (Figure 242).

   Note: Retain the long tensioning-bracket for installation in Installing the Alternator (60 A) (page 109). Discard the old belt-tensioning bracket.
6. Al the back of the alternator, fully loosen the pivot bolt and remove the belt cover from the machine (Figure 242).

   Note: Discard the belt cover.
7. While supporting the alternator, remove the pivot bolt, lock washer, and flat washer from the alternator and the gear case of the engine (Figure 242).

   Note: Retain the pivot bolt, lock washer, and flat washer for installation in Installing the Alternator (60 A) (page 109). Discard the alternator (40 A) at a parts recycling center.

8. Slip the belt off the alternator pulley and remove the alternator from the machine.

Installing the Alternator (60 A)

1. Align the holes in the new belt tension bracket with the holes in the thermostat housing (Figure 243).

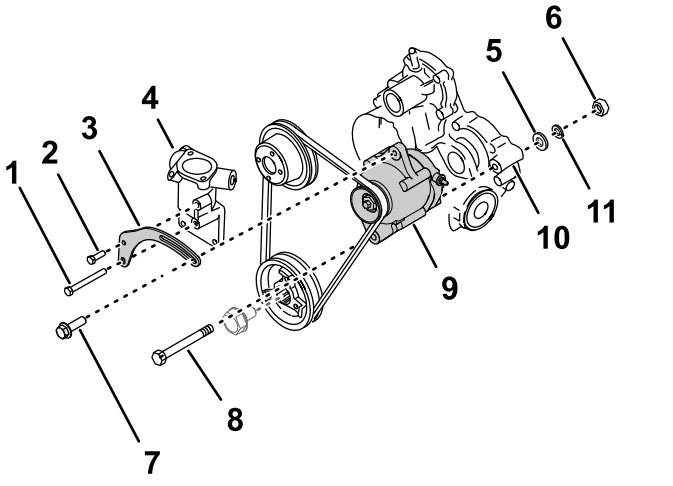

g307757

Figure 243

1. Tensioning-bracket bolt—long
2. Tensioning-bracket bolt—short
3. Belt-tensioning bracket (new)
4. Thermostat housing
5. Flat washer
6. Nut (10 mm)
7. Alternator-lock bolt
8. Pivot bolt
9. Alternator (60 A)
10. Gear case
11. Lock washer

2. Assemble the belt tension bracket to the thermostat housing and cylinder head with the short tensioning-bracket bolt in the upper hole and the long tensioning-bracket bolt in the lower hole (Figure 243).
3. Torque the bolts to 29 to 33 ft-lb (39.5 to 44 N·m).
4. Align the lower hole in the alternator (60 A) to the hole in the gear case of the engine and slip the belt over the alternator pulley (Figure 243).

   Note: The lower hole in the alternator is not threaded.
5. Assemble the alternator to the gear case with the pivot bolt, lock washer, and flat washer that you removed in step 7 of Removing the Alternator (40 A) (page 107).
6. Loosely assemble the nut (10 mm) onto the pivot bolt (Figure 243).
7. Assemble the alternator-lock bolt through the slot in the belt tension bracket and the threaded hole in the alternator (Figure 243).
8. Rotate the alternator outward until you attain belt tension that allows the belt to deflect 10 mm (3/8 inch) when 4.5 kg (10 lb) force is applied to the belt, midway between the pulleys (Figure 243).
9. Torque the alternator-lock bolt, and the pivot bolt and nut (10 mm) to 64 to 71 N·m (47 to 53 ft-lb).

Installing the Alternator Adapter Harness

1. Align the socket connector of the alternator adapter harness with the pins of the electrical connector on the alternator (60 A) and push the connectors together the lock on the connector snaps securely (Figure 244).

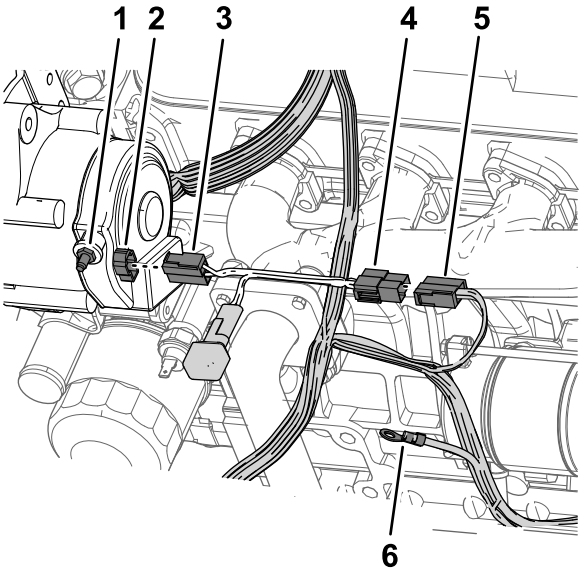

g289490

Figure 244

1. Alternator post
2. Pin connector (60 A alternator)
3. Socket connector (alternator-adapter harness)
4. 2-blade connector (alternator-adapter harness)
5. 2-socket connector (machine-wire harness)
6. Ring terminal (machine-wire harness)

2. Align the 2-blade connector of the alternator adapter harness with the 2-socket connector of the wire harness for the machine that you removed in step 2 of Removing the Alternator (40 A) (page 107) and push the connectors together until the lock on the connectors snaps securely (Figure 244).
3. At the wire harness of the machine, assemble the ring terminal onto the alternator post, and secure the terminal with the nut (6 mm) that you removed in step 1 of Removing the Alternator (40 A) (page 107).

41

Completing the Installation of the GeoLink Spray System Finishing Kit

No Parts Required

Procedure

1. Move the prop rod for the seats into the slots and tilt the seats down.
2. Connect the positive (red) cable to the positive (+) battery post and the negative (black) cable to the negative (–) battery post using the bolts and nuts; refer to Figure 3 in the instructions for Disconnecting the Battery (page 7).
3. Slide the insulator boot over both battery posts; refer to Figure 3 in the instructions for Disconnecting the Battery (page 7).
4. Install the battery cover and secure it with the strap; refer to Figure 2 in the instructions for Disconnecting the Battery (page 7).

Operation

Think Safety First

Carefully read all safety instructions and symbols in the safety section. Knowing this information could help you or bystanders avoid injury.

⚠ CAUTION

This machine produces sound levels that can cause hearing loss through extended periods of exposure.

Wear hearing protection when operating this machine.

Use protective equipment for your eyes, ears, hands, feet, and head.

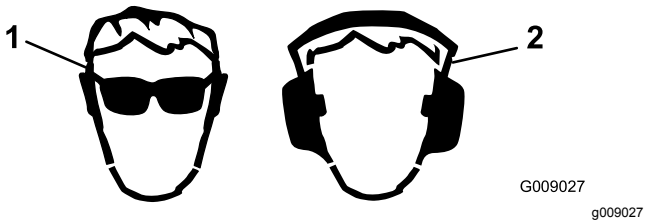

Figure 245

1. Wear eye protection.
2. Wear hearing protection.

Operating the Shutoff Valve

Optional Hand Spray Wand Kit, Electric Hose Reel Kit, or Pivoting Hose Reel Kit

1. Park the machine on a level surface, turn the booms off, and engage the parking brake.

   ⚠ WARNING

   Driving the machine while using the hand sprayer can cause loss of control, resulting in injury or death.

   Do not operate the hand sprayer while you are driving the machine.

2. Perform the following for the spray wand or hose reel kits:
   - Optional Hand Spray-Wand Kit—at the right side of the machine, ensure that the trigger lock on the spray gun is locked; refer to switching from boom spray mode to hand spray mode in the *Installation Instructions* for the Hand Spray-Wand Kit.
   - Optional Electric Hose-Reel Kit or the Pivoting Hose-Reel Kit—at the back of the machine, ensure that the trigger lock on the spray gun is locked; refer to switching from boom spray mode to hand spray mode in the *Installation Instructions* for the Electric Hose-Reel Kit or the Pivoting Hose-Reel Kit.
3. Rotate the green handle of the shutoff valve counterclockwise 90 degrees to the OPEN position (Figure 246).

   Note: To shut off the flow of fluid to the hand-spray wand of hose reel, rotate the green handle of the shutoff valve clockwise 90 degrees to the CLOSED position (Figure 246).

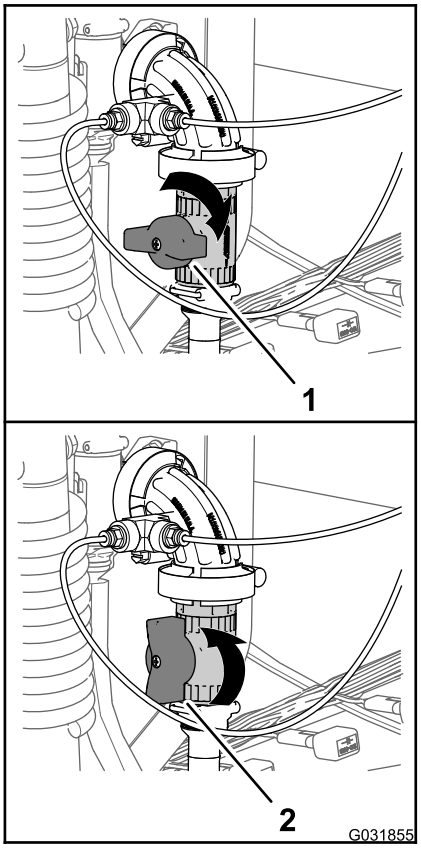

g031855

Figure 246

1. Closed position (shutoff valve)
2. Open position (shutoff valve)

4. Set the master-boom switch to the ON position.
5. Adjust the engine speed to the desired rpm, then set the neutral engine-speed lock.
6. Manually set the sprayer system to your desired pressure for spray gun operation; refer to Changing the Pressure Manually for the Hose Reel and Eductor video on the USB drive that you received with the GeoLink Precision Spray System.

   Note: Do not use a pressure setting higher than 1034 kPa (150 psi) with the hand sprayer.

Operating the Controls

Optional Foam Marker Kit

- Compressor on/off switch—Use this switch to run the compressor for the foam marker system.

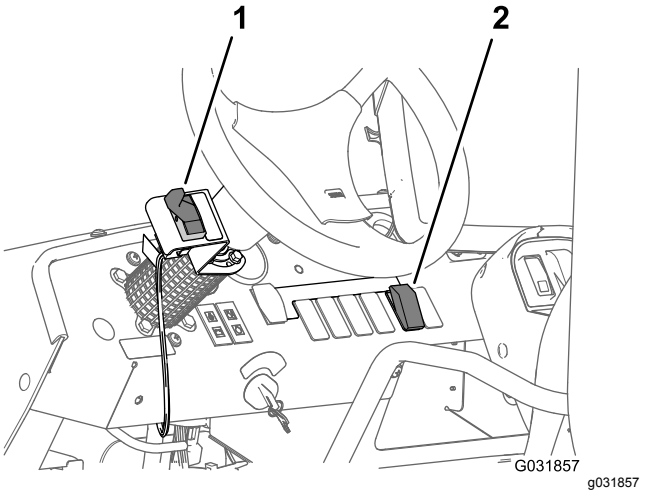

g031857

Figure 247

1. Compressor on/off switch
2. Foam-control switch

- Foam-control switch—Use this switch to control which boom from which foam flows.
  - Move the paddle down to apply foam from the left boom section.
  - Move the paddle to the center position apply foam from the left and right boom sections.
  - Move the paddle up to apply foam from the right boom section.

Operating the Fluid-Shutoff Valve

Optional Chemical Pre-Mix Kit

The following procedure assumes the following operational states exist for the standard tank agitation: The sprayer is started and running, the pump is engaged and set to the desired pressure, and the throttle is in the mid-range position.

Note: Close the eductor hopper valve and hopper rinse ball valve(s) before starting the eductor.

1. Lower the eductor; refer to raising and lowering the eductor in the chemical pre-mix kit *Installation Instructions*.
2. Open the lid to check for foreign objects which may hinder performance or contaminate the system; refer to starting the eductor in the *Installation Instructions* for the chemical pre-mix kit.

3. Close and lock the lid by turning the cover clockwise; refer to starting the eductor in the *Installation Instructions* for the chemical pre-mix kit.
4. Open the fluid-shutoff valve for the eductor by rotating the handle counterclockwise to the OPEN position (Figure 248).

   Note: To shut off the flow of fluid to the eductor, rotate the handle of the fluid-shutoff valve clockwise 90 degrees to the CLOSED position (Figure 248).

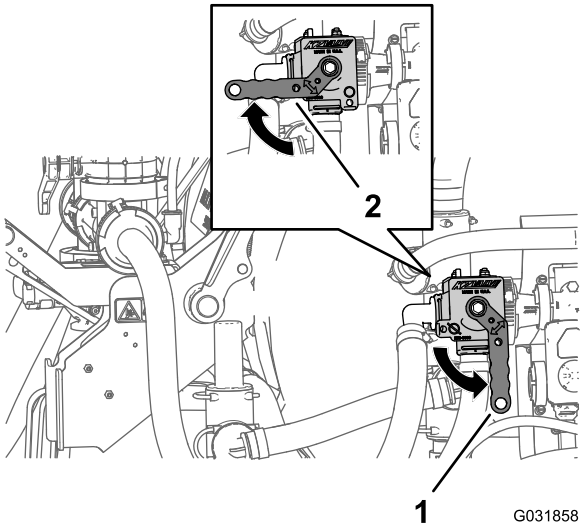

Figure 248

1. Open position (fluid-shutoff valve)
2. Closed position (fluid-shutoff valve)

5. Open the hopper valve (red handle) located on the bottom of the hopper; refer to starting the eductor in the *Installation Instructions* for the chemical pre-mix kit.
6. Unlock and open the lid slowly by turning the cover counterclockwise; refer to starting the eductor in the *Installation Instructions* for the chemical pre-mix kit.
7. Fill the hopper of the eductor; refer to Loading Liquid or Powdered Chemical into the Hopper in the *Installation Instructions* for the chemical pre-mix kit.