Form No. 3431-158 Rev C

Mulching Kit

GrandStand® Mower With 122cm Rear Discharge TURBO FORCE® Cutting Unit

Model No. 134-3259

Installation Instructions

Safety

Rear Discharge or Mulch Grass

⚠ WARNING

Without the grass deflector mounted in place, you and others are exposed to blade contact and thrown debris. Contact with rotating mower blade(s) and thrown debris will cause injury or death.

- **Never remove the grass guard from the mower because the grass guard routes material down toward the turf. If the grass guard is ever damaged, replace it immediately.**
- **Never put your hands or feet under the mower.**
- **Never try to clear the discharge area or mower blades unless you engage the parking brake, disengage the power take off (PTO) lever, shutoff the engine, remove the ignition key, and wait for all motion to stop. Also pull the wire off the spark plug(s).**

Ensure that the mower has the rear grass guard to disperses clippings to the rearward and down toward the turf, while in rear discharge mode.

To mulch grass clippings, install the baffles on the mower deck as instructed in the following procedures.

© 2019—The Toro® Company
8111 Lyndale Avenue South
Bloomington, MN 55420

Register at www.Toro.com.

CE

Original Instructions (EN)
Printed in the USA
All Rights Reserved
3431-158 C

Installation

Loose Parts

Use the chart below to verify that all parts have been shipped.

Procedure	Description	Qty.	Use
1	No parts required	–	Prepare the mower.
2	No parts required	–	Open the engine guard.
3	No parts required	–	Remove the left belt cover.
4	No parts required	–	Remove the existing blades.
5	No parts required	–	Drill the mower deck.
6	Left baffle support Center/right baffle support Flanged capscrew (5/16 x 3/4 inch) Flange locknut (5/16 inch) Carriage bolt (5/16 x 1-1/4 inches)	1 2 2 6 4	Install the baffle supports.
7	Baffle (right) Baffle (center) Baffle (left) Carriage bolt (3/8 x 1 inch) Flange locknut (3/8 inch)	1 1 1 9 9	Install the baffles.
8	Kicker fitting Carriage bolt (3/8 x 1 inch) Flange locknut (3/8 inch)	3 6 6	Install the kicker fittings.
9	Recycler blades (sold separately)	3	Install the recycler blades.
10	No parts required	–	Install the left belt cover.
11	No parts required	–	Install the guard extension and close the engine guard.
12	Flange-head capscrew (3/8 x 1 inch)	8	Convert the deck for rear-discharge operation.

Note: Recycler blades (sold separately) are required to install this kit; refer to the *Parts Catalog* for your machine.

1

Preparing the Mower

No Parts Required

Procedure

Note: Determine the left and right sides of the machine from the normal operating position.

1. Park the machine on a level surface; disengage the cutting unit(s) and lower the cutting unit; engage the parking brake; shut off the engine and remove the key; and wait for all movement to stop.
2. Thoroughly clean the mower deck. Remove all debris to ensure that the baffles fit properly against the mower deck.
3. Repair all bent or damaged areas of the mower deck and replace any missing or damaged parts.

2

Opening the Engine Guard and Removing the Guard Extension

No Parts Required

Opening the Engine Guard

1. Remove the bolt and shoulder nut securing the engine guard to the guard extension (Figure 1).

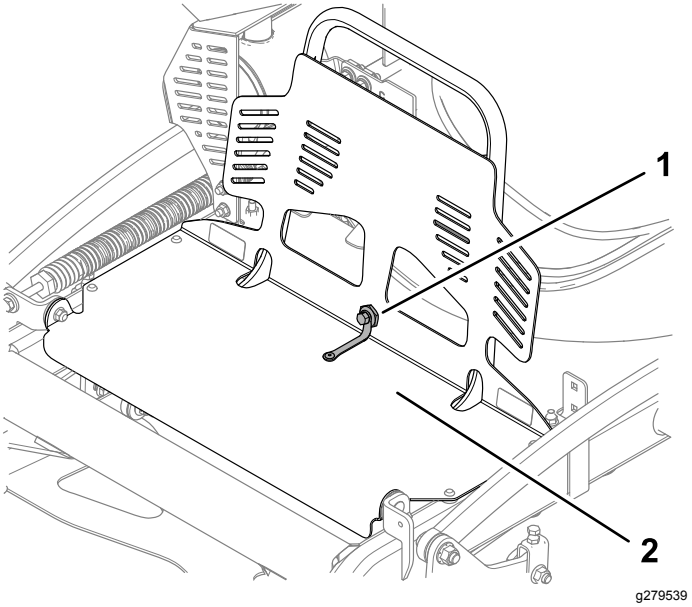

Figure 1

1. Bolt and shoulder nut
2. Engine guard

2. Rotate the engine guard forward as shown in Figure 2.

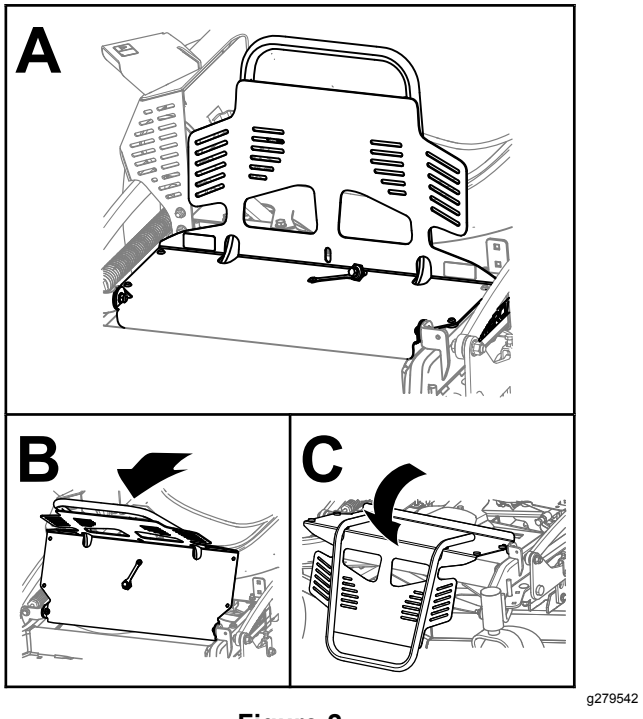

Figure 2

Disconnecting the Spark-Plug Wire

Remove the spark-plug wire from the spark plug.

Removing the Guard Extension

1. Remove the 2 bolts (5/16 x 1 inch) and belt guard (Figure 3).

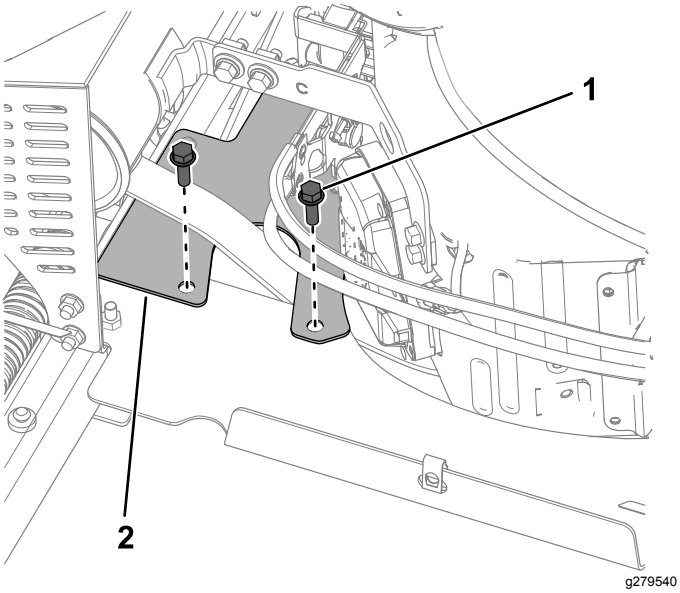

Figure 3

1. Bolt (5/16 x 1 inch)
2. Belt guard

2. Remove the hex nut (5/16 inch) nut (5/16 inch) securing the guard extension to the carriage bolts (Figure 4). Remove the guard extension.

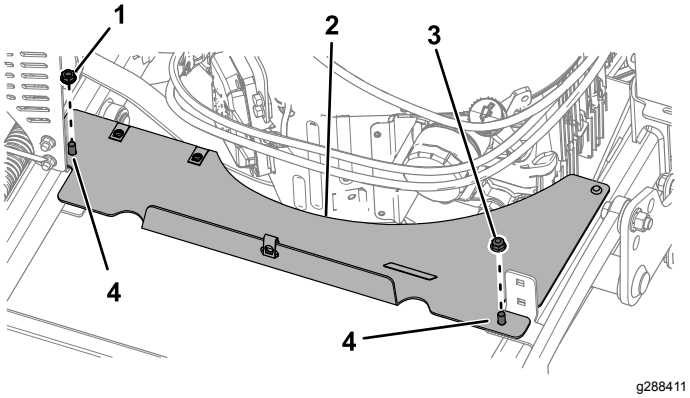

Figure 4

1. Hex nut (5/16 inch)
2. Guard extension
3. Nut (5/16)
4. Carriage bolt (5/16 x 4 inches)

3

Removing the Left Belt Cover

No Parts Required

Procedure

1. Remove the 2 flange-head screws that secure the tensioner cover to the left belt cover, and remove the tensioner cover (Figure 5).

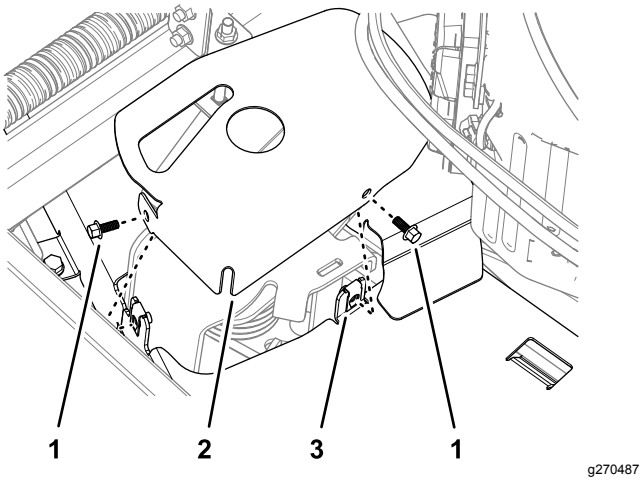

Figure 5

1. Flange-head screws (1/4 x 5/8 inch)
2. Tensioner cover
3. Left belt cover

2. Remove the bolt that secure the belt cover flanges as shown in Figure 6.

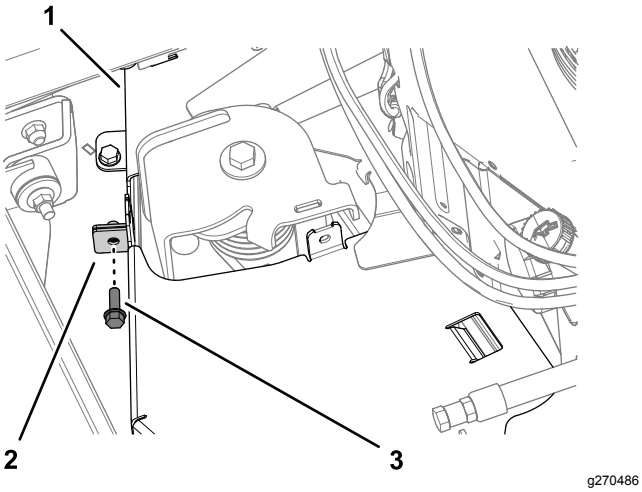

Figure 6

1. Right belt cover
2. Flange (left belt cover)
3. Flange-head screw (left and right belt cover)

3. Remove the 2 carriage bolts and 2 locknuts that secure the left side CE cover to the left belt cover (Figure 7).

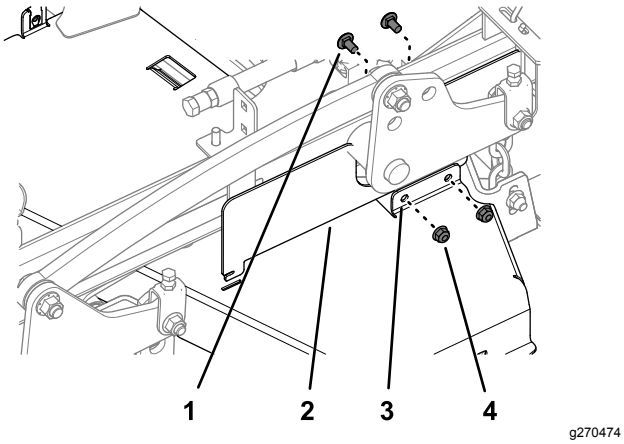

Figure 7

1. Carriage bolt
2. Left side CE cover
3. Left belt cover
4. Flange locknut

4. Remove the 3 bolts that secure the left belt cover to the deck, and remove the cover (Figure 8).

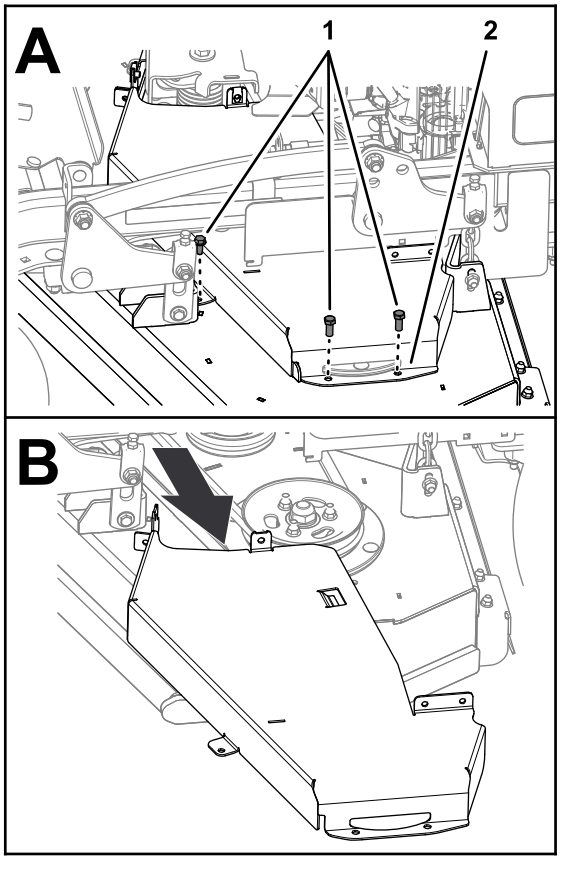

Figure 8

1. Bolts
2. Left belt cover

4

Removing the Existing Blades

No Parts Required

Procedure

1. Lift the machine so that you can access the bottom of the mower deck.
2. Remove the existing blades from the spindles; refer to the *Operator's Manual* for your machine.

Note: Save the blades for use when cutting grass in rear discharge mode.

You will use the blade bolt and washer for installing the recycler blades in 9 Installing the Recycler Blades (page 14).

5

Drilling the Mower Deck

No Parts Required

Drilling the Center Baffle Support Holes

1. At the bottom of the mower deck, drill the 2 pilot holes in the deck with an 8 mm (5/16 inch) drill bit as shown in Figure 9.

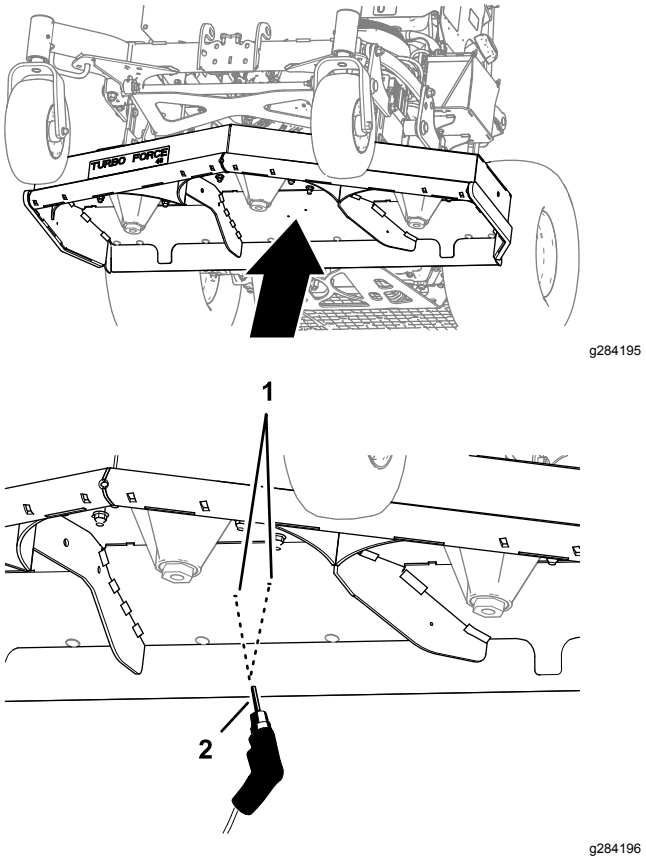

Figure 9

1. Pilot hole (mower deck) 2. 8 mm (5/16 inch) drill bit

2. Remove any burrs from the holes that you drilled.

Drilling the Baffle and Kicker Fitting Holes

Note: Determine the left and right sides of the machine from the normal operating position.

1. At the left side of the mower deck, drill the pilot hole in the deck with a 10 mm (3/8 inch) drill bit as shown in Figure 10.

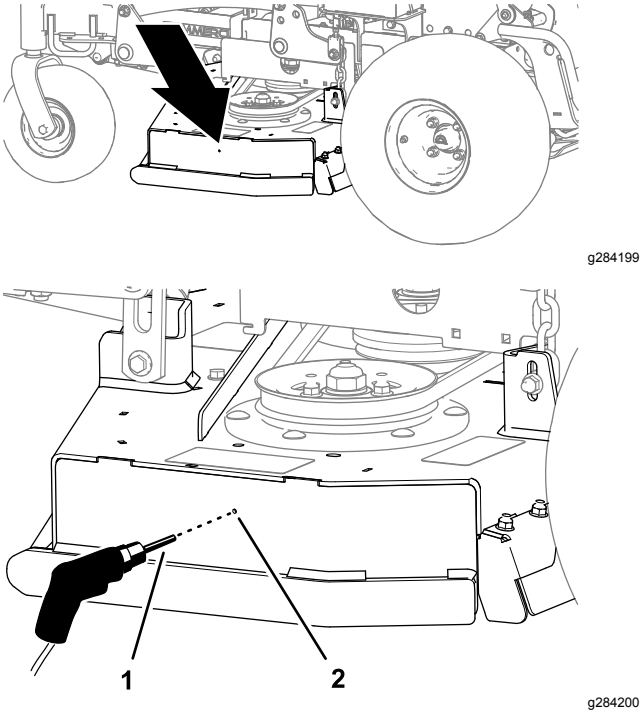

Figure 10

1. 10 mm (3/8 inch) drill bit 2. Pilot hole (mower deck)

2. Remove any burrs from the holes.
3. At the right side of the mower deck, drill the pilot hole in the deck with a 10 mm (3/8 inch) drill bit as shown in Figure 11.

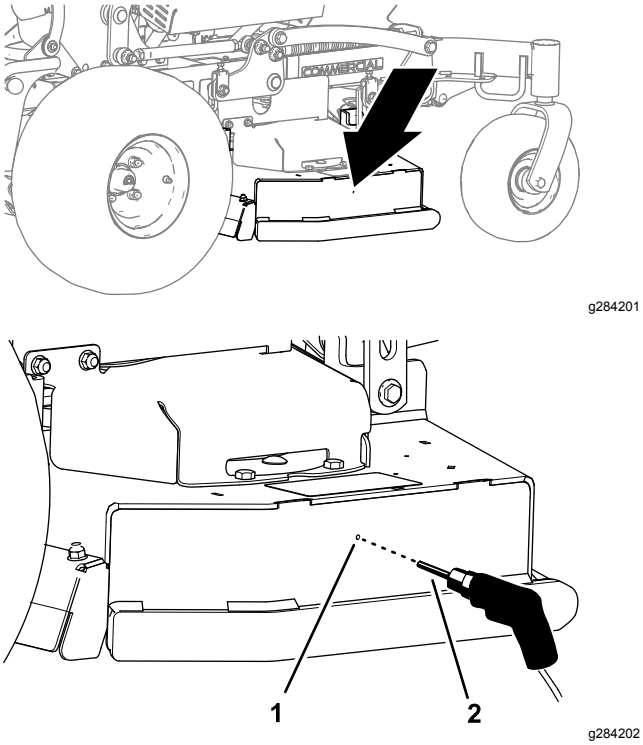

Figure 11

1. Pilot hole (mower deck)
2. 10 mm (3/8 inch) drill bit

4. At the bottom of the mower deck, drill the 6 pilot holes in the deck with a 10 mm (3/8 inch) drill bit as shown in Figure 12.

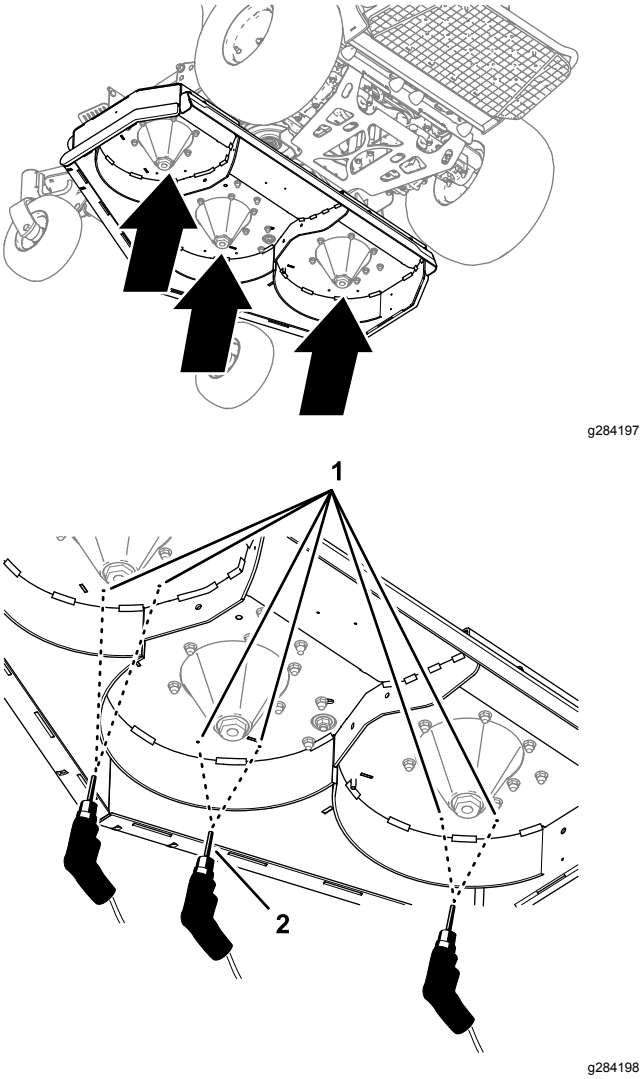

Figure 12

1. Pilot holes (mower deck)
2. 10 mm (3/8 inch) drill bit

5. At the left divider, drill the pilot hole in the divider with a 10 mm (3/8 inch) drill bit as shown in Figure 13.

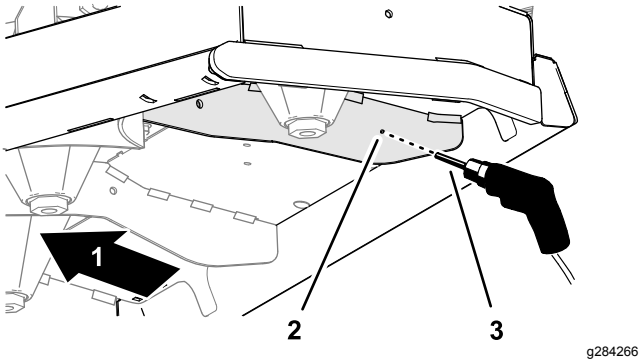

Figure 13

1. Front of the machine
2. Pilot holes (left divider)
3. 10 mm (3/8 inch) drill bit

6. Remove any burrs from the holes that you drilled.

6

Installing the Baffle Supports

Parts needed for this procedure:

1	Left baffle support
2	Center/right baffle support
2	Flanged capscrew (5/16 x 3/4 inch)
6	Flange locknut (5/16 inch)
4	Carriage bolt (5/16 x 1-1/4 inches)

Identifying the Baffle Supports

Identify the left baffle support and the 2 center/right baffle supports (Figure 14).

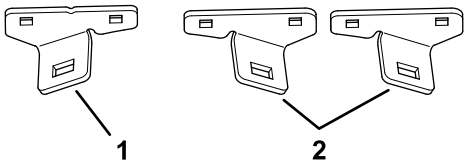

g284108

Figure 14

1. Left baffle support
2. Center/right baffle supports

Installing the Left Baffle Support

Note: Determine the left and right sides of the machine from the normal operating position.

1. Remove the 2 outboard carriage bolts (5/16 x 7/8 inch) and 2 outboard flange locknuts (5/16 inch) that secure the deflector bracket to the mower deck (Figure 15).

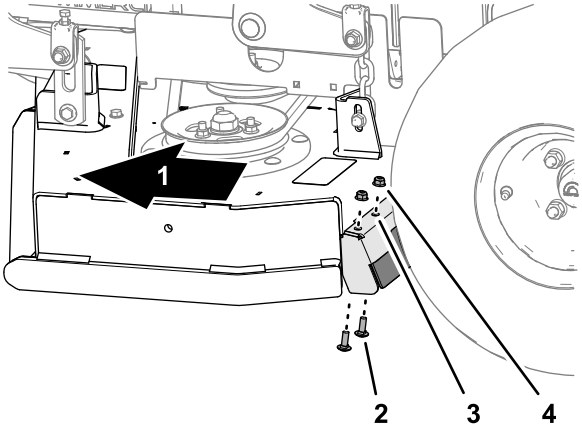

g284228

Figure 15

1. Front of the machine
2. Carriage bolt (5/16 x 7/8 inch)
3. Deflector bracket
4. Flange locknut (5/16 inch)

2. Align the holes in the left baffle support with the holes on the mower deck and deflector bracket (Figure 16).

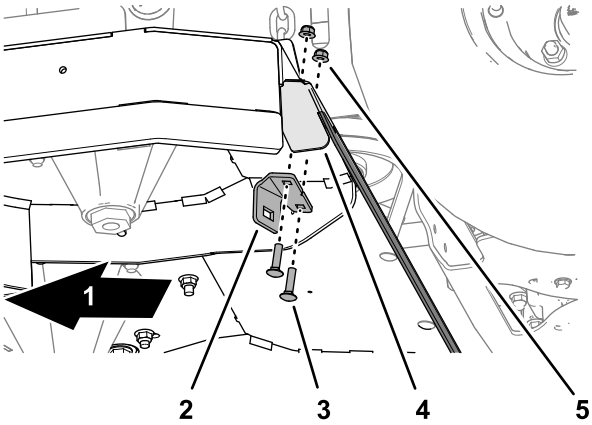

g284224

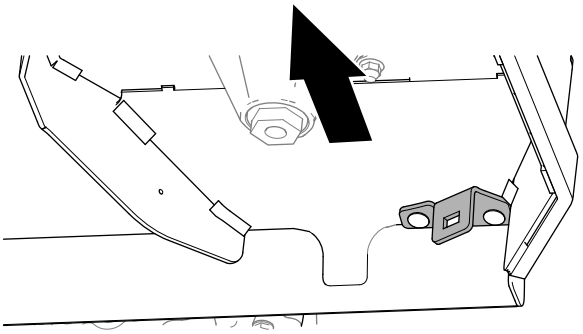

g284225

Figure 16

1. Front of the machine
2. Left baffle support
3. Carriage bolt (5/16 x 1-1/4 inch)
4. Deflector bracket
5. Flange locknut (5/16 inch)

3. Assemble the left baffle support to the mower deck and deflector bracket (Figure 16) with 2

carriage bolts (5/16 x 1-1/4 inch) and 2 flange locknuts (5/16 inch).

4. Torque the 2 flange locknuts to 20 to 25 N·m (15 to 18 ft-lb).

Installing the Right Baffle Support

Note: Determine the left and right sides of the machine from the normal operating position.

1. Remove the 2 outboard carriage bolts (5/16 x 7/8 inch) and 2 outboard flange locknuts (5/16 inch) that secure the deflector bracket to the mower deck (Figure 17).

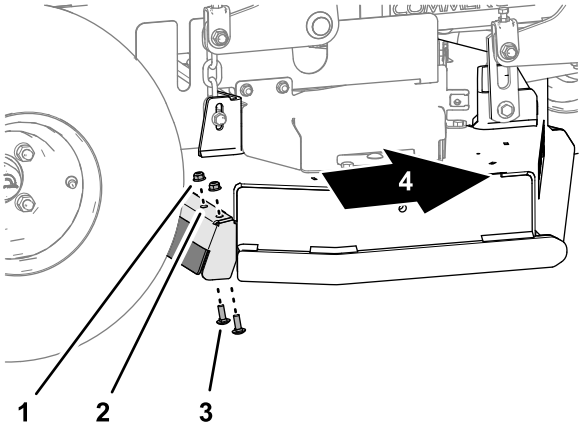

g284229

Figure 17

1. Flange locknut (5/16 inch)
2. Deflector bracket
3. Carriage bolt (5/16 x 7/8 inch)
4. Front of the machine

2. Align the holes in the center/right baffle support with the holes on the mower deck and deflector bracket (Figure 18).

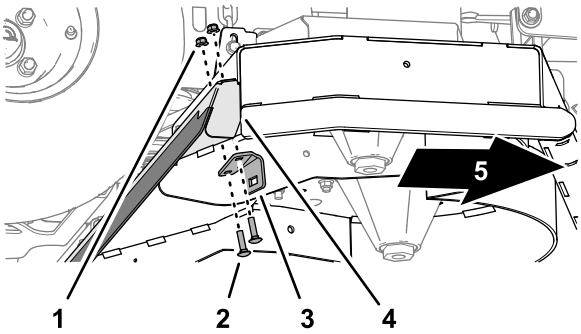

g284226

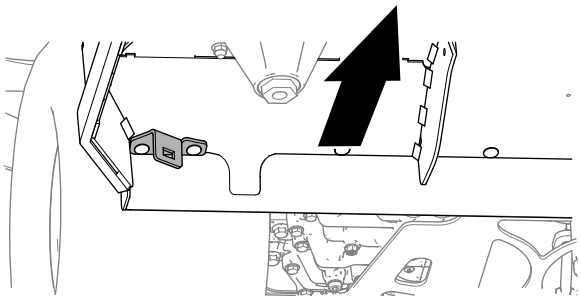

g284227

Figure 18

1. Flange locknut (5/16 inch)
2. Carriage bolt (5/16 x 1-1/4 inch)
3. Center/right baffle support
4. Deflector bracket
5. Front of the machine

3. Assemble a center/right baffle support to the mower deck and deflector bracket (Figure 18) with 2 carriage bolts (5/16 x 1-1/4 inch) and 2 flange locknuts (5/16 inch).

4. Torque the 2 flange locknuts to 20 to 25 N·m (15 to 18 ft-lb).

Installing the Center Baffle Support

Note: Determine the left and right sides of the machine from the normal operating position.

1. At the top of the mower deck, insert 2 flange-head bolts (5/16 x 3/4 inch) through the 8 mm (5/16 inch) holes that you drilled in Drilling the Center Baffle Support Holes (page 6).

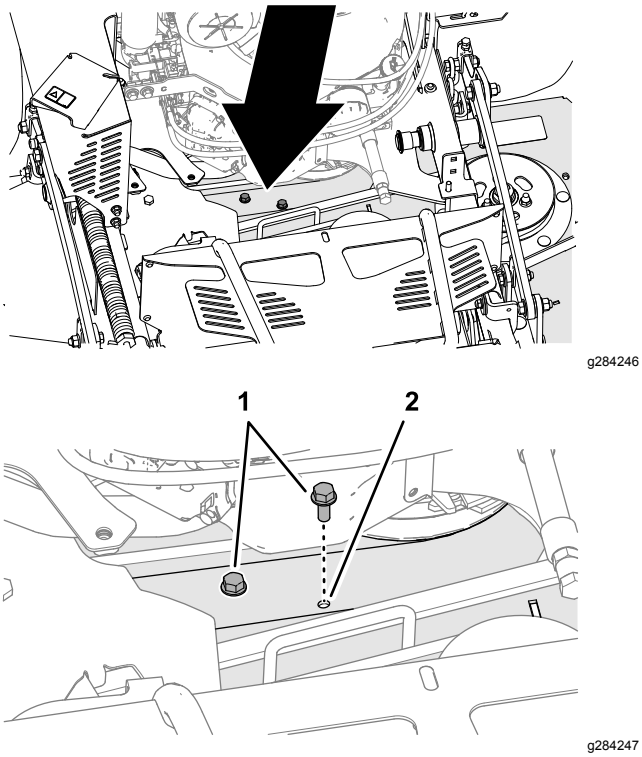

Figure 19

1. Flange-head bolts (5/16 x 3/4 inch)
2. Mower deck hole —8 mm (5/16 inch)

2. At the bottom of the mower deck, assemble a center/right baffle support onto the flange-head bolts with 2 flange locknuts (5/16 inch).

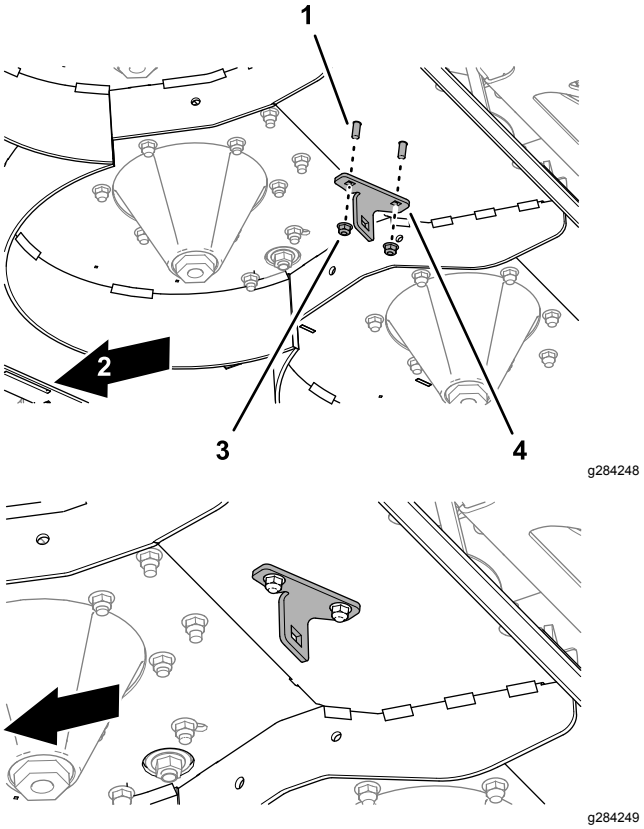

Figure 20

1. Flange-head bolts (5/16 x 3/4 inch)
2. Front of the machine
3. Flange locknut (5/16 inch)
4. Center/right baffle support

3. Torque the 2 flange locknuts to 20 to 25 N·m (15 to 18 ft-lb).

7

Installing the Baffles

Parts needed for this procedure:

1	Baffle (right)
1	Baffle (center)
1	Baffle (left)
9	Carriage bolt (3/8 x 1 inch)
9	Flange locknut (3/8 inch)

Identifying the Baffles

Identify the left, center, and right baffles (Figure 21).

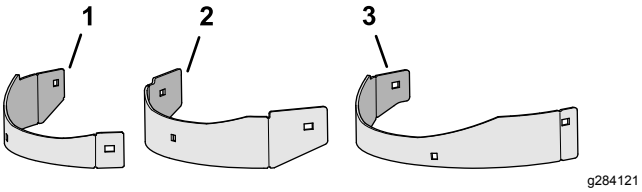

Figure 21

1. Left baffle
2. Center baffle
3. Right baffle

Installing the Baffles

Note: Determine the left and right sides of the machine from the normal operating position.

1. Align the holes in the right baffle with the hole in the right side plate of the mower deck, the hole in the center/right baffle support, and the hole in the right divider as shown in Figure 22.

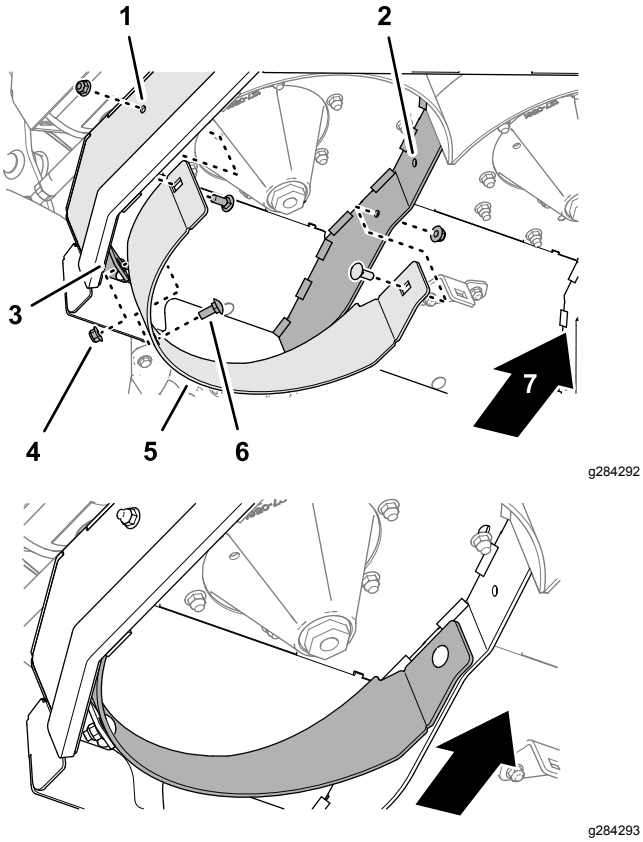

Figure 22

1. Right side plate (mower deck)
2. Right divider
3. Center/right baffle support
4. Flange locknut (3/8 inch)
5. Right baffle
6. Carriage bolt (3/8 x 1 inch)
7. Front of the machine

2. Assemble the right baffle to the mower deck side plate, the baffle support, and the divider (Figure 22) with 3 carriage bolts (3/8 x 1 inch) and 3 flange locknuts (3/8 inch).

3. Align the holes in the center baffle with the hole in the right divider, the hole in the other center/right baffle support, and the left divider as shown in Figure 23.

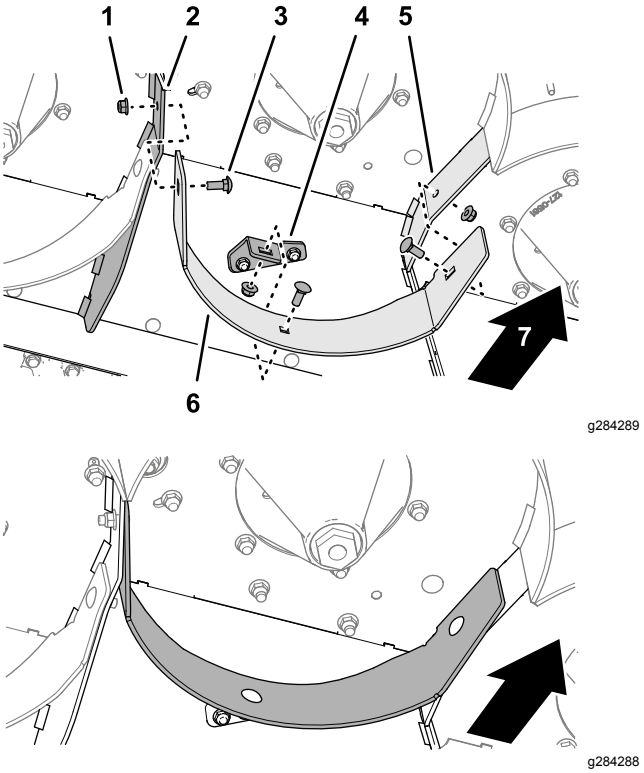

Figure 23

1. Flange locknut (3/8 inch)
2. Right divider
3. Carriage bolt (3/8 x 1 inch)
4. Center/right baffle support
5. Left divider
6. Center baffle
7. Front of the machine

4. Assemble the center baffle to the right and left dividers (Figure 23) with 3 carriage bolts (3/8 x 1 inch) and 3 flange locknuts (3/8 inch).

5. Align the holes in the left baffle with the hole in the left side plate of the mower deck, the hole in the left baffle support, and the hole in the left divider as shown in Figure 24.

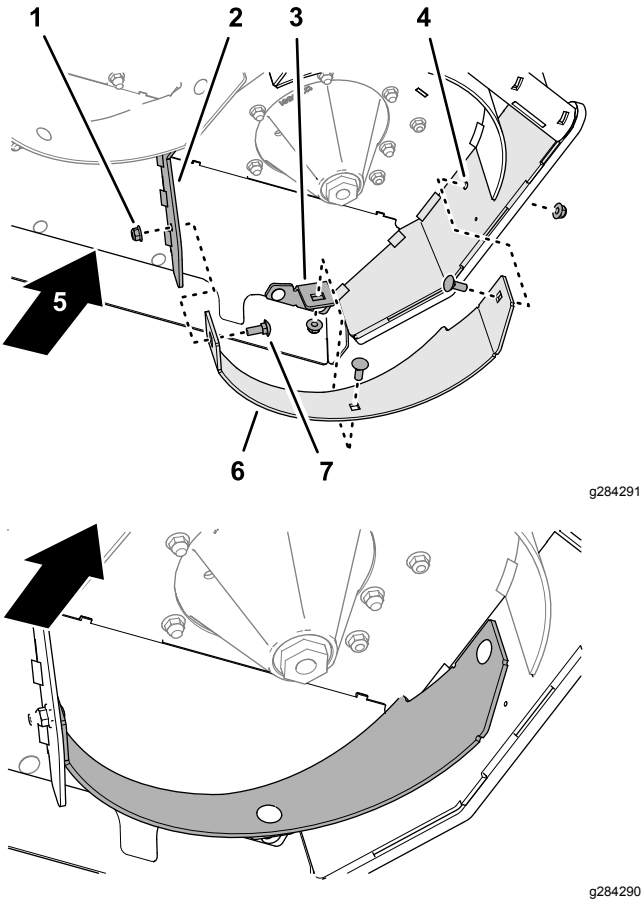

Figure 24

1. Flange locknut (3/8 inch)
2. Left divider
3. Left baffle support
4. Left side plate (mower deck)
5. Front of the machine
6. Left baffle
7. Carriage bolt (3/8 x 1 inch)

6. Assemble the left baffle to the mower deck side plate, the baffle support, and the divider (Figure 24) with 3 carriage bolts (3/8 x 1 inch) and 3 flange locknuts (3/8 inch).
7. Torque the 9 flange locknuts (3/8 inch) to 27 to 33 N·m (37 to 45 ft-lb).

8

Installing the Kicker Fittings

Parts needed for this procedure:

3	Kicker fitting
6	Carriage bolt (3/8 x 1 inch)
6	Flange locknut (3/8 inch)

Procedure

Note: Determine the left and right sides of the machine from the normal operating position.

1. At the right side of the mower deck, align the slots in the kicker fitting with the 2 holes 10 mm (3/8 inch) that you drilled into the mower deck (Figure 25).

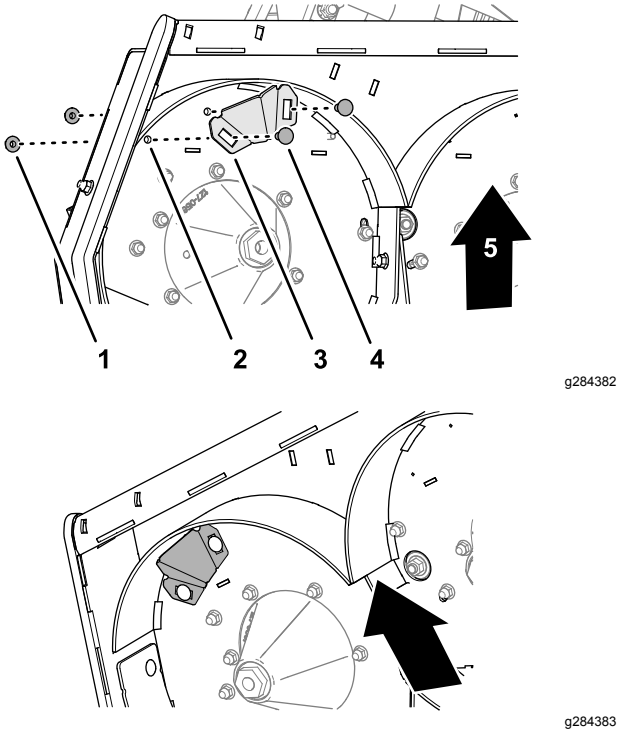

Figure 25

1. Flange locknut (3/8 inch)
2. 10 mm (3/8 inch) holes—mower deck
3. Kicker fitting
4. Carriage bolt (3/8 x 1 inch)
5. Front of the machine

2. Assemble the kicker fitting to the deck (Figure 25) with 2 carriage bolts (3/8 x 1 inch) and 2 flange locknuts (3/8 inch).
3. At the middle of the mower deck, align the slots in the kicker fitting with the 2 holes 10 mm

(3/8 inch) that you drilled into the mower deck (Figure 26).

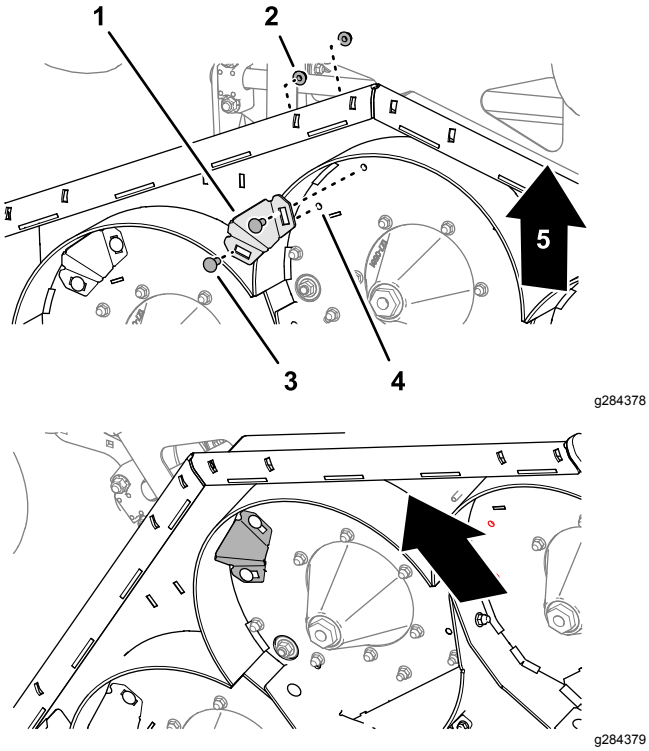

Figure 26

1. Kicker fitting
2. Flange locknut (3/8 inch)
3. Carriage bolt (3/8 x 1 inch)
4. 10 mm (3/8 inch) holes—mower deck
5. Front of the machine

4. Assemble the kicker fitting to the deck (Figure 26) with 2 carriage bolts (3/8 x 1 inch) and 2 flange locknuts (3/8 inch).
5. At the left side of the mower deck, align the slots in the kicker fitting with the 2 holes 10 mm (3/8 inch) that you drilled into the mower deck (Figure 27).

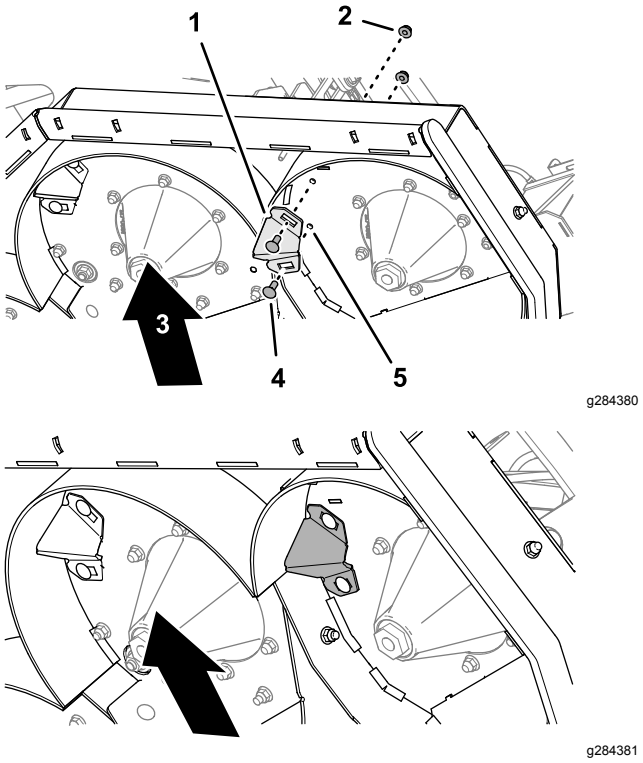

Figure 27

1. Kicker fitting
2. Flange locknut (3/8 inch)
3. Front of the machine
4. Carriage bolt (3/8 x 1 inch)
5. 10 mm (3/8 inch) holes—mower deck

6. Assemble the kicker fitting to the deck (Figure 27) with 2 carriage bolts (3/8 x 1 inch) and 2 flange locknuts (3/8 inch).
7. Torque the 2 flange locknuts to 37 to 45 N·m (27 to 33 ft-lb).

9

Installing the Recycler Blades

Parts needed for this procedure:

3	Recycler blades (sold separately)

Procedure

⚠ WARNING

A blade is sharp. Contact with a sharp blade can cause serious personal injury.

Wear gloves or wrap sharp edges of the blade with a rag.

Install the recycler blades onto the mower; refer to the *Parts Catalog* for your machine for the blade part number and the *Operator's Manual* for your machine for installation instructions.

10

Installing the Left Belt Cover

No Parts Required

Procedure

1. Assemble the left belt cover to the deck (Figure 28) with the 3 bolts that you removed in 3 Removing the Left Belt Cover (page 4).

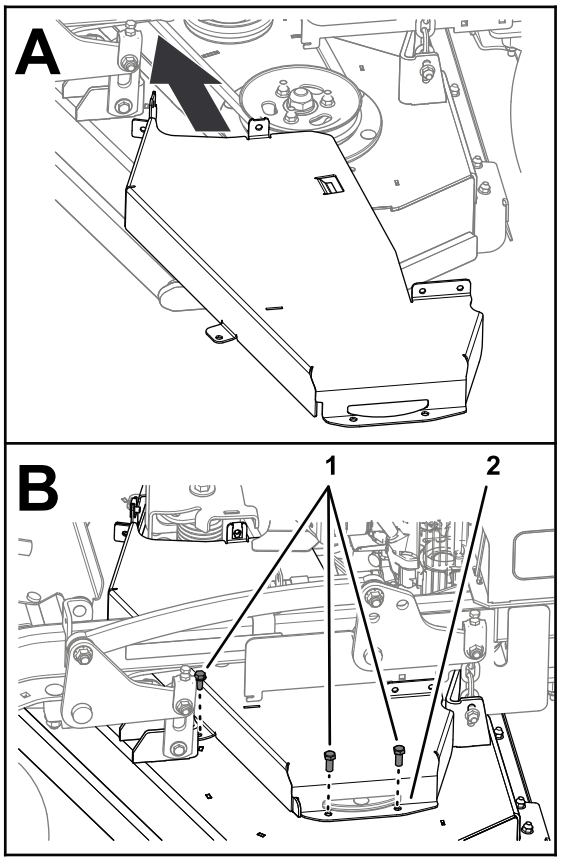

g270503

Figure 28

1. Bolts
2. Left belt cover

2. Assemble the left side CE cover to the left belt cover (Figure 29) with the 2 carriage bolts and 2 locknuts that you removed in 3 Removing the Left Belt Cover (page 4).

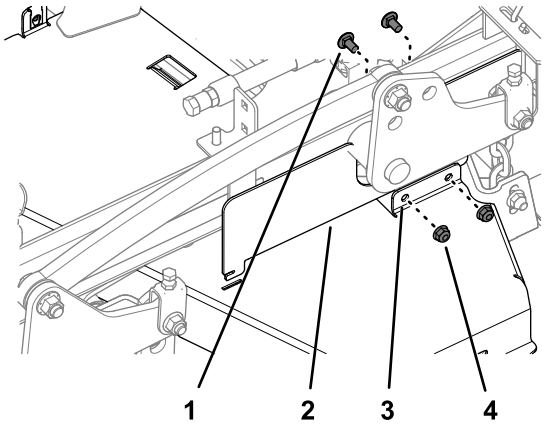

g270474

Figure 29

1. Carriage bolt
2. Left side CE cover
3. Left belt cover
4. Flange locknut

3. Secure the belt cover flanges with the flange-head screw (Figure 30) that you removed in 3 Removing the Left Belt Cover (page 4).

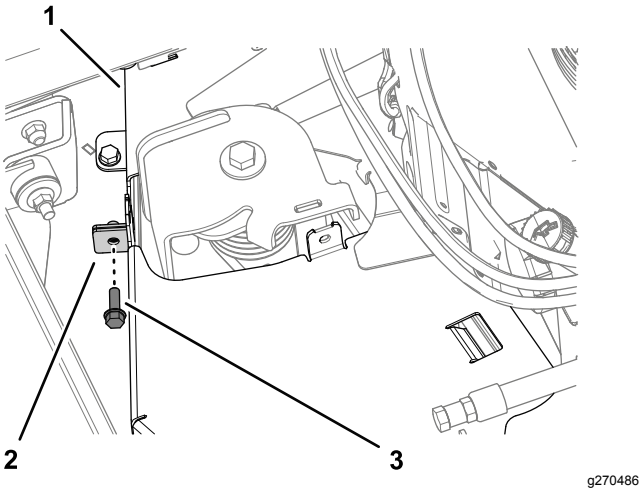

Figure 30

1. Right belt cover
2. Flange (left belt cover)
3. Flange-head screw (left and right belt cover)

4. Assemble the tensioner cover to the left belt cover with the 2 flange-head screws that you removed in 3 Removing the Left Belt Cover (page 4), as shown in Figure 31.

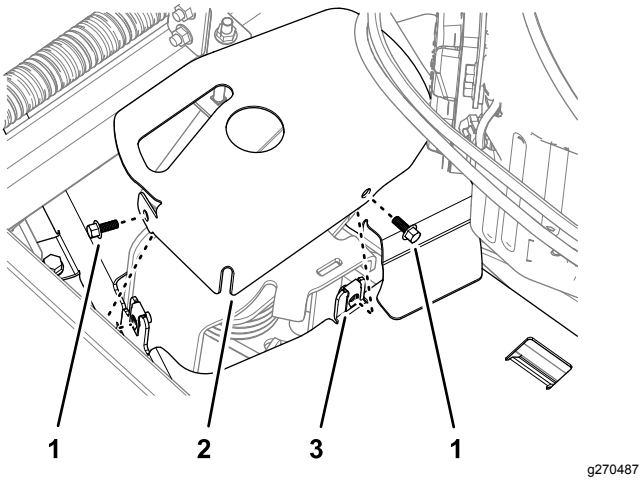

Figure 31

1. Flange-head screws (1/4 x 5/8 inch)
2. Tensioner cover
3. Left belt cover

11

Installing the Guard Extension and Closing the Engine Guard

No Parts Required

Installing the Guard Extension

1. Install the extension guard as shown in Figure 32. Torque the nuts to 20 to 25 N·m (15 to 18 ft-lb).

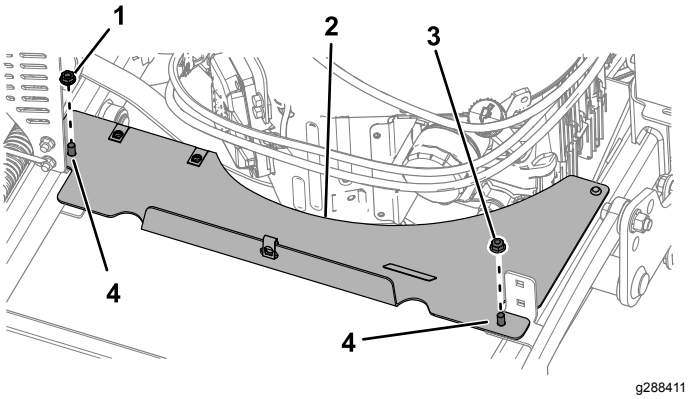

Figure 32

1. Hex nut (5/16 inch)
2. Guard extension
3. Nut (5/16)
4. Carriage bolt (5/16 x 4 inches)

2. Install the belt guard as shown in Figure 33. Torque the bolts to 20 to 25 N·m (15 to 18 ft-lb).

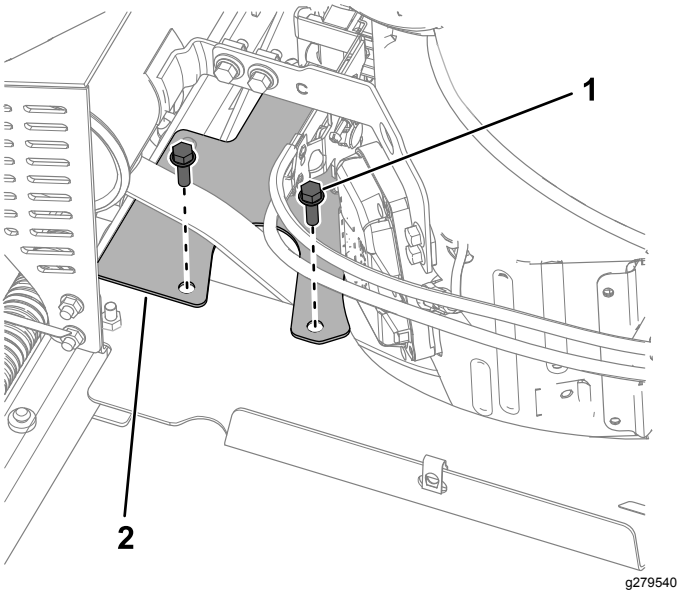

Figure 33

1. Bolt (5/16 x 1 inch)
2. Belt guard

Connecting the Spark-Plug Wire

Connect the spark-plug wire to the spark plug.

Closing the Engine Guard

1. Rotate the engine guard back as shown in Figure 34.

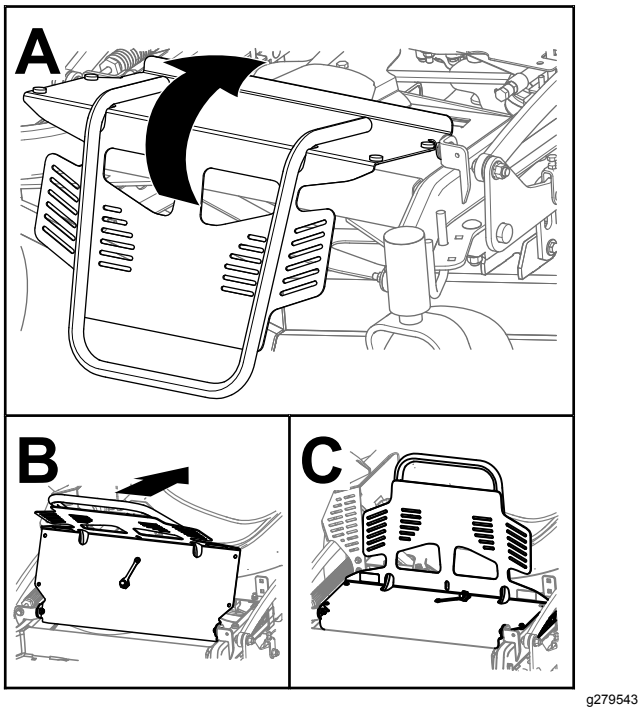

Figure 34

2. Secure the engine guard to the extension guard using the bolt and shoulder nut as shown in Figure 35.

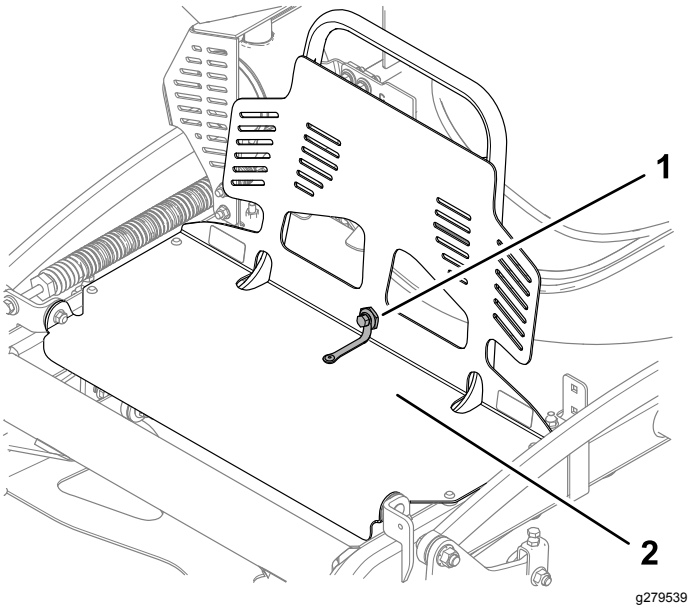

Figure 35

1. Bolt and shoulder nut
2. Engine guard

12

Converting the Mower Deck for Rear-Discharge Operation

Parts needed for this procedure:

8	Flange-head capscrew (3/8 x 1 inch)

Preparing to Remove the Mulching Kit

1. Prepare the mower; refer to 1 Preparing the Mower (page 3).
2. Open the engine guard and remove the guard extension; refer to 2 Opening the Engine Guard and Removing the Guard Extension (page 3).
3. Remove the belt cover; refer to 3 Removing the Left Belt Cover (page 4).
4. Remove the recycling blades; refer to the *Operator's Manual* for your machine.

Removing the Kicker Fittings

Note: Determine the left and right sides of the machine from the normal operating position.

1. At the bottom left side of the mower deck, remove the 2 carriage bolts (3/8 x 1 inch) and 2 flange locknuts (3/8 inch) that secure the kicker fitting to the deck, and remove the kicker fitting (Figure 36).

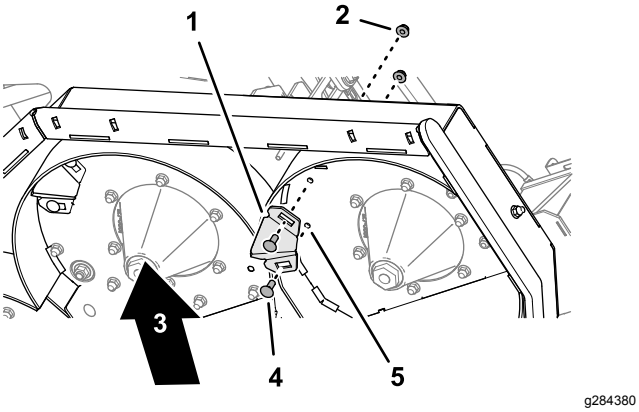

Figure 36

1. Kicker fitting
2. Flange locknut (3/8 inch)
3. Front of the machine
4. Carriage bolt (3/8 x 1 inch)
5. 10 mm (3/8 inch) hole—mower deck

2. At the bottom, center side of the mower deck, remove the 2 carriage bolts (3/8 x 1 inch) and 2 flange locknuts (3/8 inch) that secure the kicker fitting to the deck, and remove the kicker fitting (Figure 37).

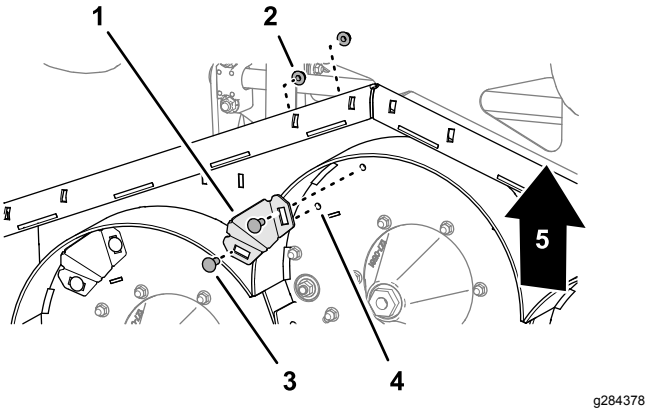

Figure 37

1. Kicker fitting
2. Flange locknut (3/8 inch)
3. Carriage bolt (3/8 x 1 inch)
4. 10 mm (3/8 inch) hole—mower deck
5. Front of the machine

3. Install 2 flange-head capscrews (3/8 x 1 inch) into the 10 mm (3/8 inch) holes in the mower deck (Figure 38) and secure the capscrews with 2 flange locknuts (3/8 inch) that you removed in step 2.

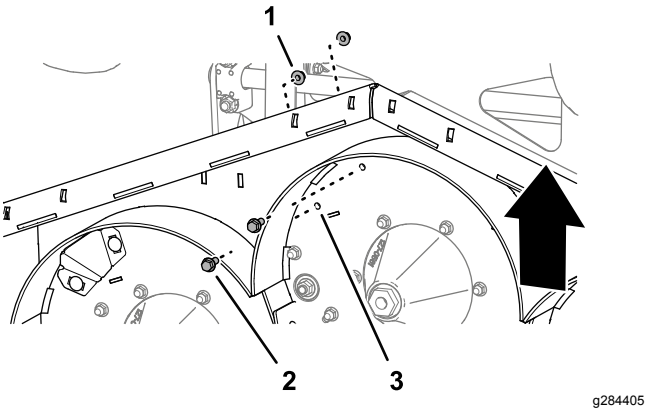

Figure 38

1. Flange locknut (3/8 inch)
2. Flange-head capscrew (3/8 x 1 inch)
3. 10 mm (3/8 inch)—mower deck

4. At the bottom, right side of the mower deck, remove the 2 carriage bolts (3/8 x 1 inch) and 2 flange locknuts (3/8 inch) that secure the kicker fitting to the deck, and remove the kicker fitting (Figure 39).

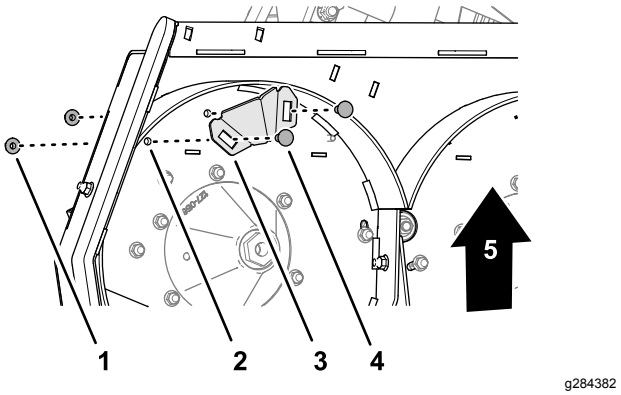

Figure 39

1. Flange locknut (3/8 inch)
2. 10 mm (3/8 inch) holes—mower deck
3. Kicker fitting
4. Carriage bolt (3/8 x 1 inch)
5. Front of the machine

5. Install 2 flange-head capscrews (3/8 x 1 inch) into the 10 mm (3/8 inch) holes in the mower deck (Figure 39) and secure the capscrews with 2 flange locknuts (3/8 inch) that you removed in step 4.

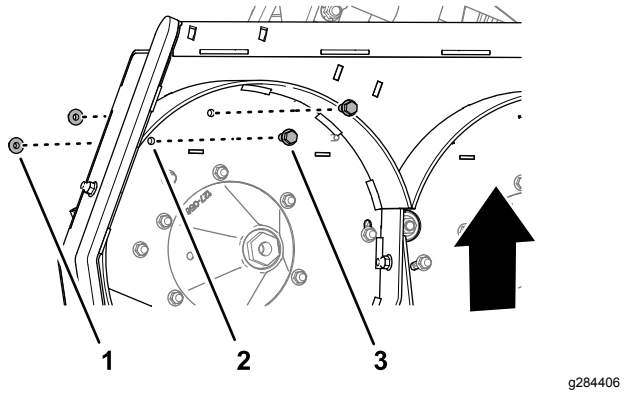

Figure 40

1. Flange locknut (3/8 inch)
2. 10 mm (3/8 inch) holes—mower deck
3. Flange-head capscrew (3/8 x 1 inch)

Note: Retain the carriage bolts and kicker fitting for installation.

Removing the Baffles

Note: Determine the left and right sides of the machine from the normal operating position.

1. At the bottom, left side of the mower deck, remove the 3 carriage bolts (3/8 x 1 inch) and 3 flange locknuts (3/8) that secure the left baffle to the mower deck side plate, the left baffle support; and the left divider; and remove the left baffle (Figure 41).

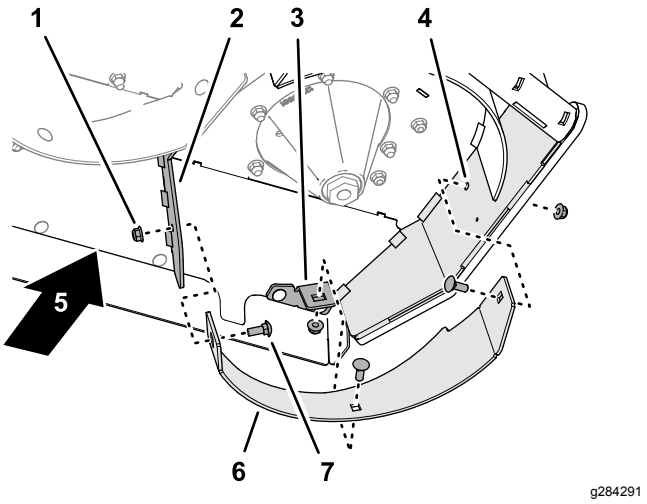

Figure 41

1. Flange locknut (3/8 inch)
2. Left divider
3. Left baffle support
4. Left side plate (mower deck)
5. Front of the machine
6. Left baffle
7. Carriage bolt (3/8 x 1 inch)

2. Install a flange-head capscrew (3/8 x 1 inch) into the 10 mm (3/8 inch) holes in the mower deck (Figure 42) and secure the capscrews with the flange locknut (3/8 inch) that you removed in step 1.

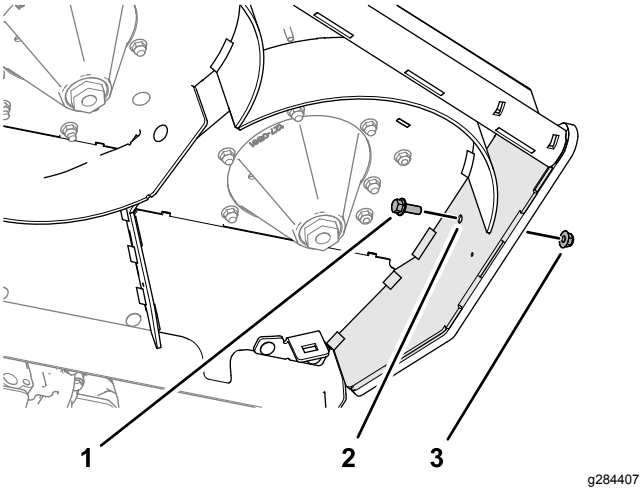

Figure 42

1. Flange locknut (3/8 inch)
2. Right side plate (mower deck)
3. Flange-head capscrew (3/8 x 1 inch)

3. At the bottom, center side of the mower deck, remove the 3 carriage bolts (3/8 x 1 inch) and 3 flange locknuts (3/8) that secure the center baffle to the left divider, center/right baffle support, and right divider; and remove the center baffle (Figure 43).

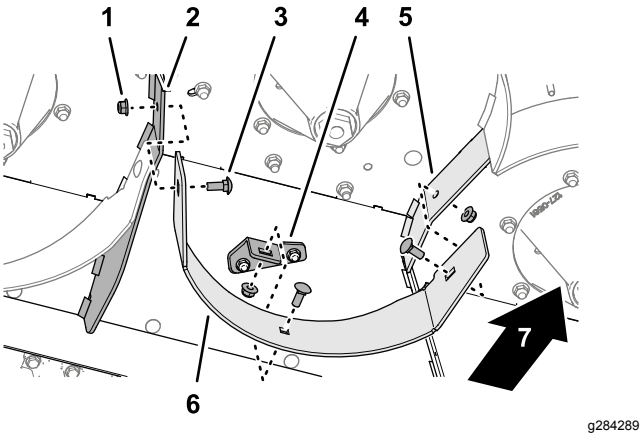

Figure 43

1. Flange locknut (3/8 inch)
2. Right divider
3. Carriage bolt (3/8 x 1 inch)
4. Center/right baffle support
5. Left divider
6. Center baffle
7. Front of the machine

4. At the bottom, right side of the mower deck, remove the 3 carriage bolts (3/8 x 1 inch) and 3 flange locknuts (3/8) that secure the right baffle to the mower deck side plate, the center/right baffle support; and the right divider; and remove the right baffle (Figure 44).

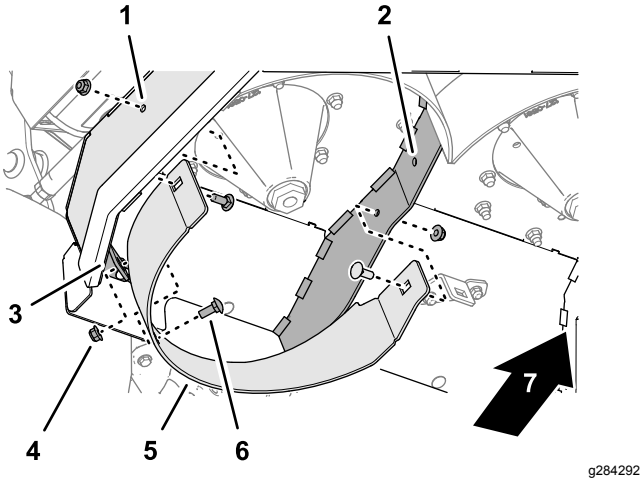

Figure 44

1. Right side plate (mower deck)
2. Right divider
3. Center/right baffle support
4. Flange locknut (3/8 inch)
5. Right baffle
6. Carriage bolt (3/8 x 1 inch)
7. Front of the machine

5. Install a flange-head capscrew (3/8 x 1 inch) into the 10 mm (3/8 inch) holes in the mower deck (Figure 45) and secure the capscrews with the flange locknut (3/8 inch) that you removed in step 4.

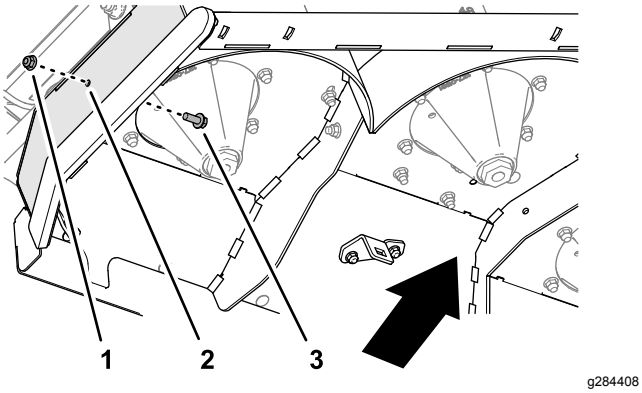

Figure 45

1. Flange locknut (3/8 inch)
2. Left side plate (mower deck)
3. Flange-head capscrew (3/8 x 1 inch)

Note: Retain the carriage bolts and baffles for installation.

Removing the Baffle Brackets

1. Remove the 2 flange locknuts (5/16 inch) that secure the left baffle support (Figure 46).

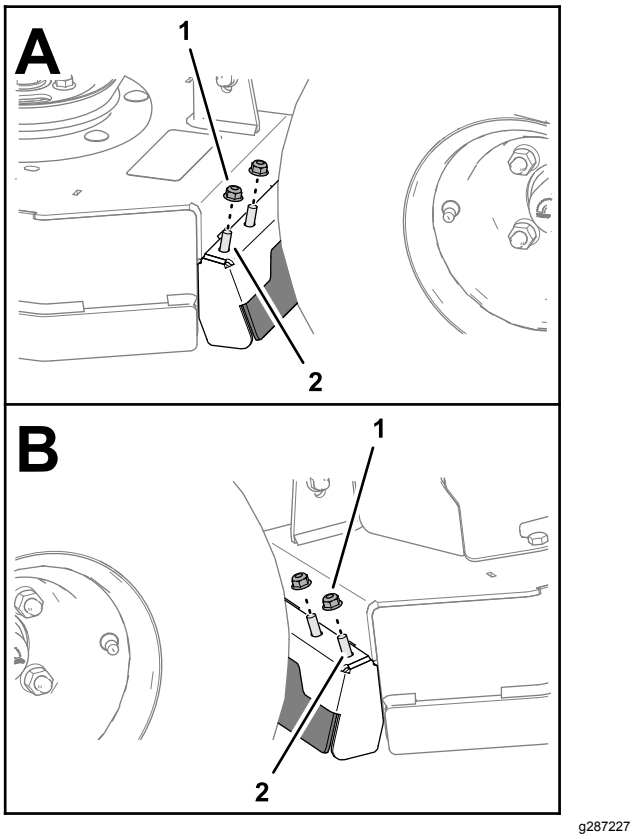

Figure 46

1. Flange locknut (5/16 inch)
2. Carriage bolt (baffle support)

2. Remove the 2 flange locknuts (5/16 inch) that secure the right baffle support (Figure 46).
3. Remove the left baffle support and 2 carriage bolt (5/16 x 1-1/4 inch) from the bottom of the mower deck as shown in Figure 47.

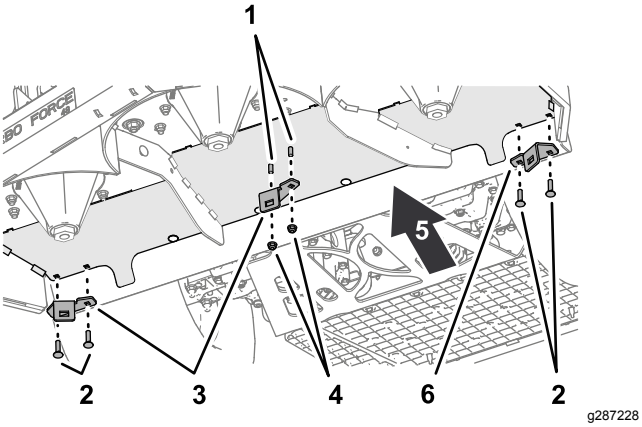

Figure 47

1. Flange-head bolts (5/16 x 3/4 inch)
2. Carriage bolts (5/16 x 1-1/4 inch)
3. Center and right baffle supports
4. Flange locknut (5/16 inch)
5. Front of the machine
6. Left baffle support

4. Remove the right baffle support and 2 carriage bolt (5/16 x 1-1/4 inch) from the bottom of the mower deck as shown in Figure 47.
5. Remove the 2 flange locknut (5/16 inch) that secure the center baffle support to the 2 flange-head bolts (5/16 x 3/4 inch), and remove the center support (Figure 47).

   Note: Do not remove the flange-head bolts.
6. Install the 4 carriage bolts (Figure 48) that you remove in steps 3 and 4 into the holes in the mower deck, and secure the carriage bolts with the 4 flange locknuts that you removed in steps 1 and 2.

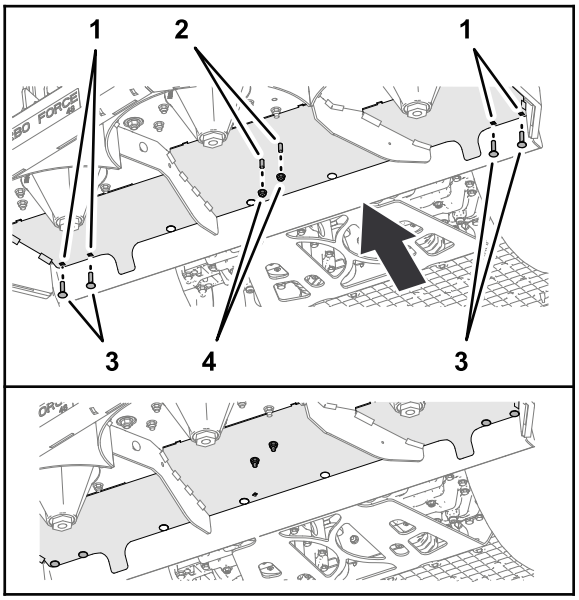

Figure 48

1. Holes (mower deck)
2. Flange-head bolts (5/16 x 3/4 inch)
3. Carriage bolt (5/16 x 1-1/4 inch)
4. Flange locknut (5/16 inch)

7. Install the 2 flange locknut (Figure 48) that you removed in step 5 onto the 2 flange-head bolts (5/16 x 3/4 inch).

Note: Retain the 3 baffle supports for installation.

Finishing Converting the Mower Deck for Rear-Discharge Operation

1. Install the non-recycling blades; refer to the *Operator's Manual* for your machine.
2. Install the left belt cover; refer to 10 Installing the Left Belt Cover (page 14).
3. Install the guard extension; refer to 11 Installing the Guard Extension and Closing the Engine Guard (page 15).
4. Connect the spark-plug wire to the spark plug.
5. Close the engine guard; refer to 11 Installing the Guard Extension and Closing the Engine Guard (page 15).

Operation

Selecting the Proper Height of Cut

Remove approximately 2.5 cm (1 inch) or no more than 1/3 of the grass blade when cutting. In exceptionally lush and dense grass you may need to raise the height-of-cut setting or convert the mower deck for rear discharge operations.

Mowing in Extreme Conditions

Air is required to cut and recut grass clippings in the mower housing, so do not set the height-of-cut too low or fully surround the housing by uncut grass. Always try to keep the back of the mower deck free from uncut grass, allowing air to be drawn into the housing. When making an initial cut through the center of an uncut area, operate the machine slower and back the machine if the mower starts to clog.

Mowing at Correct Intervals

Grass grows at different rates at different times of the year. To maintain the same cutting height, mow more often in early spring. As the grass growth rate slows in midsummer, mow less frequently. If you cannot mow for an extended period, first mow at a high cutting height, then mow again 2 days later at a lower height setting.

Mowing with Sharp Blades

A sharp blade cuts cleanly and without tearing or shredding the grass. A dull blade tears and shreds the grass. Tearing and shredding causes the grass to turn brown at the edges, which impairs growth and increases susceptibility to disease.

Cleaning the Mower Deck

Service Interval: After each use

To ensure optimum performance, clean the underside of the mower deck after each use.

Important: **Do not use brackish or reclaimed water to clean the machine.**

Note: If residue grass builds up in the mower deck, cutting performance decreases.

Notes:

Notes:

TORO®

Count on it.