FORM NO. 3315-207

TORO®

OPERATOR'S MANUAL ADDENDUM

FOR MODELS 51571 1000001 THRU 2000001 & UP
51537 1000001 THRU 2000001 & UP
51547 1000001 THRU 2000001 & UP

IMPORTANT

PLEASE READ THOROUGHLY

©The Toro Company - 1991

TPS

FORM NO. 3315-207

TORO

OPERATOR'S MANUAL ADDENDUM

FOR MODELS 51571 1000001 THRU 2000001 & UP
51537 1000001 THRU 2000001 & UP
51547 1000001 THRU 2000001 & UP

IMPORTANT

PLEASE READ THOROUGHLY

©The Toro Company - 1991

TPS

CONVERTING TO A VACUUM

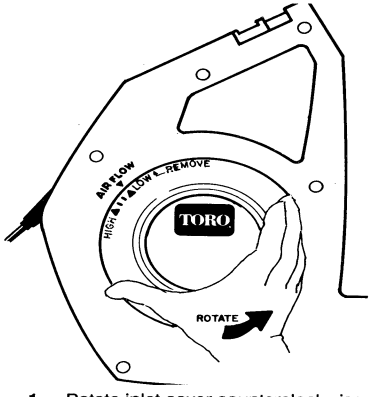

1. Rotate inlet cover counterclockwise until it stops.

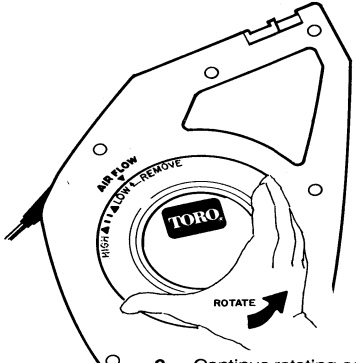

2. Continue rotating cover counterclockwise with some extra force until you hear a "snap". The "remove" arrow must line up as shown.

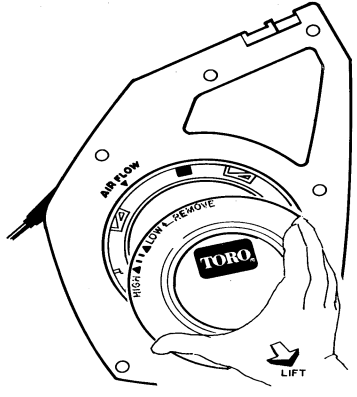

3. Remove the inlet cover.

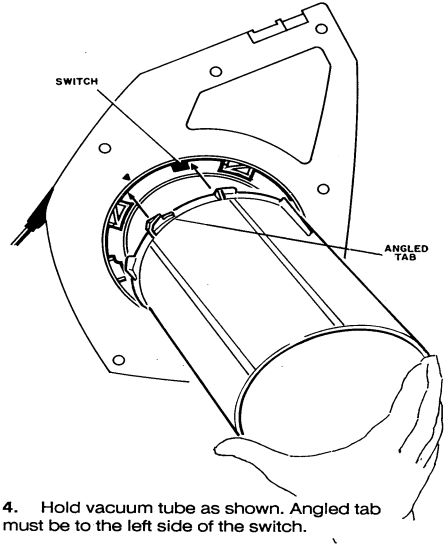

4. Hold vacuum tube as shown. Angled tab must be to the left side of the switch.

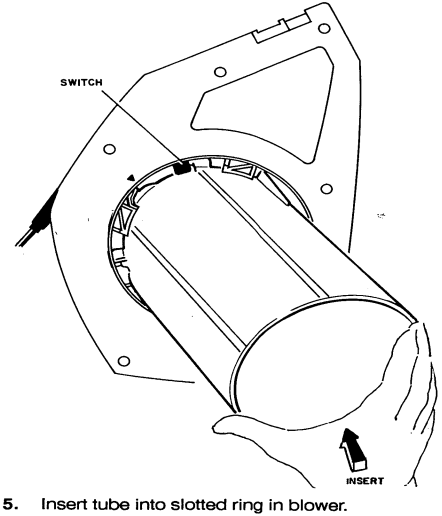

5. Insert tube into slotted ring in blower.

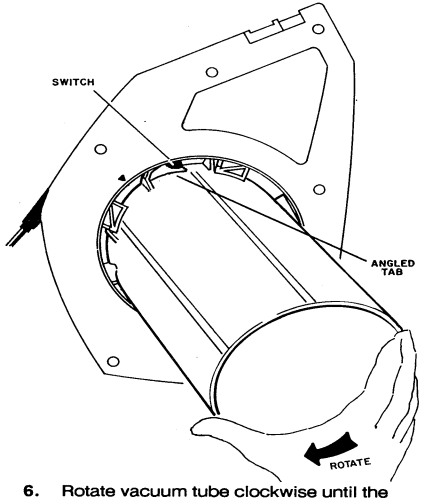

6. Rotate vacuum tube clockwise until the angled tab on the tube locks fully against the switch. Some extra effort may be required when you rotate the tube.

CONVERTING TO A BLOWER

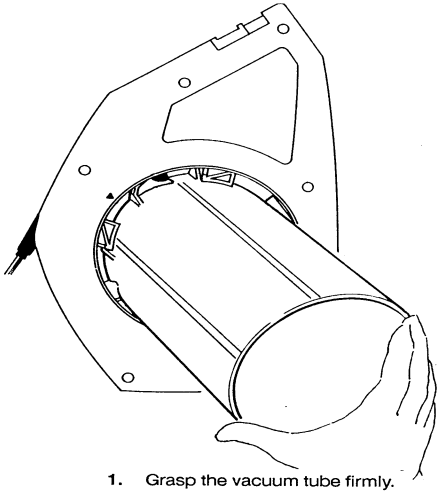

1. Grasp the vacuum tube firmly.

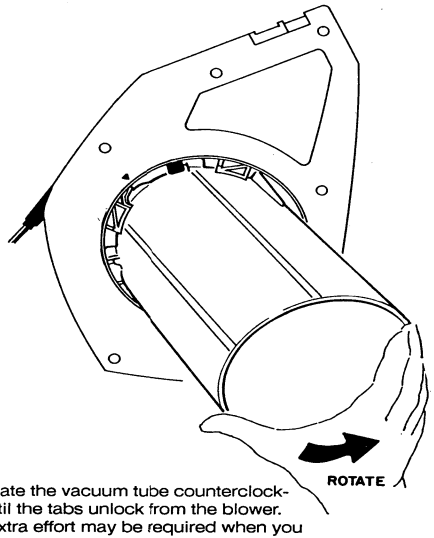

2. Rotate the vacuum tube counterclockwise until the tabs unlock from the blower. Some extra effort may be required when you rotate the tube.

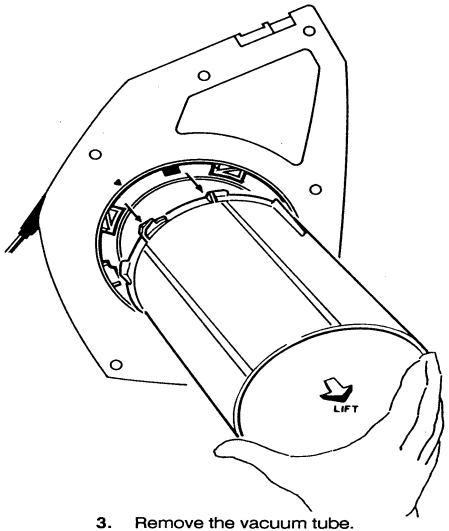

3. Remove the vacuum tube.

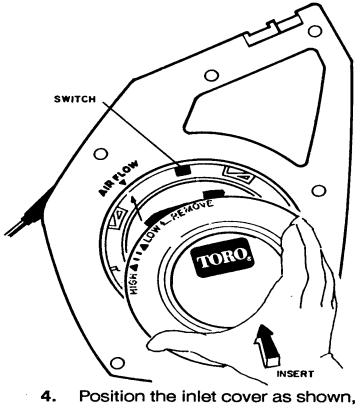

4. Position the inlet cover as shown, especially the TORO logo. Angled tab on cover must be to the left side of the switch.

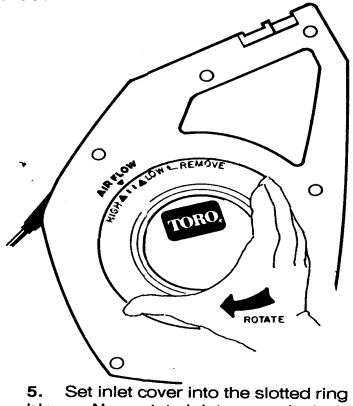

5. Set inlet cover into the slotted ring on the blower. Now rotate inlet cover clockwise until it stops.

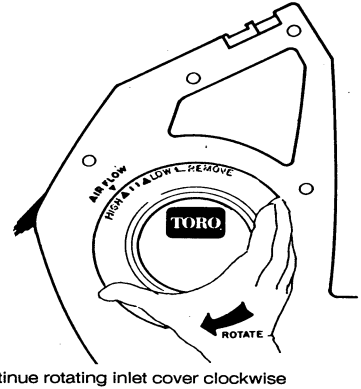

6. Continue rotating inlet cover clockwise with some extra force until you hear a "snap". The "High" and "Air Flow" large triangles must line up.