FORM NO. 3314-533

TORO

PART NO. 82-6100

INSTALLATION INSTRUCTIONS

BRUSH BLADE KIT

Since this instruction sheet covers only a minimal amount of information necessary to maintain and operate your trimmer, we suggest that you keep this material with your Operator's Manual so that both may be referred to for instructions concerning safe operation and proper maintenance procedures.

⚠ SAFETY INSTRUCTIONS

BEFORE OPERATING

1. Operate the trimmer only after reading and understanding the contents of this instruction sheet and the operator's manual that came with the trimmer. A replacement manual is available by sending complete model and serial numbers to: The Toro Company, 8111 Lyndale Avenue South, Minneapolis, Minnesota 55420.

2. Never allow children to operate trimmer. It is not a toy. Never allow adults to operate unit without first reading Operator's Manual.

3. Become familiar with the controls and know how to stop the engine quickly.

4. Always wear safety goggles or safety glasses while operating trimmer. The following articles of apparel are strongly recommended and are required by some local safety and insurance regulations:

A. Safety glasses/goggles - REQUIRED
B. Safety shoes
C. Long pants
D. A long-sleeved shirt
E. A helmet
F. Ear plugs

Dress properly—Never wear loose clothing or jewelry. They can be caught in moving parts.

5. When using a cutter blade on trimmer, a shoulder harness MUST be worn.

6. Ear plugs MUST be worn when operating trimmer for prolonged periods of time (over 2-1/2 hours).

7. Keep the area of operation clear of all persons, especially children and pets.

8. For proper control, balance and ease of operation, ALWAYS USE THE SHOULDER HARNESS. Do not attempt to start engine while wearing harness with trimmer attached. Disconnect trimmer from harness before starting engine.

9. Never operate trimmer when you are fatigued.

10. Keep all shields, safety devices, and decals in place. If a shield, safety device or decal is damaged, repair or replace it before operating the trimmer.

11. Gasoline is highly flammable; handle it carefully. The trimmer is fueled with a mixture of gasoline and oil. Indoor or outdoor heat, sunlight or engine heat may cause flammable gasoline vapors which pressurize trimmer fuel tank. Observe all the following precautions:

A. Use an approved fuel container for storing the gasoline/oil mixture.
B. Do not fill tank when engine is hot or running.
C. Do not smoke while handling gasoline.
D. Fill fuel tank outdoors and up to about one-half inch (13 mm) from the top of the tank, not into the filler neck.
E. Wipe up any spilled gasoline before starting the engine.
F. Before transporting trimmer in a vehicle, drain all gasoline from fuel tank.
G. Store trimmer in a cool, ventilated place.
H. Lay trimmer on a flat surface so fuel does not contact the gas cap when not operating.

12. Inspect blade prior to each use. Do not use if cracked, nicked, distorted or damaged in any way.

WHILE OPERATING

13. Never run the engine in a confined area without adequate ventilation. Exhaust fumes are hazardous and could be deadly.

14. Always be sure of your footing. Keep a firm hold of the handles with both hands and walk, never run, during operation. Shut the engine off before proceeding to the next area of operation.

15. The trimmer is intended to be used as a means of trimming grassy, weedy and brushy areas only. DO NOT use the trimmer for such things as tree pruning or hedge trimming. Do not use the trimmer for vertical edging. The grass shield is designed only for horizontal trimming.

16. When using a metal blade cutting attachment, the blade can be suddenly and uncontrollably thrust in any direction when blade strikes a solid object while rotating at high speed. Do not put hands or feet near or under rotating parts. Keep all people and animals far away while operating. Contact with rotating metal blade or thrown debris will cause severe injury to operator, bystanders and animals.

©The Toro Company-1991

⚠ SAFETY INSTRUCTIONS

17. If the trimmer should start to vibrate abnormally, stop the engine and check immediately for the cause. Vibration is generally a warning of trouble.

18. Avoid using the trimmer near rocks, gravel, stones or other debris which could be picked up and thrown as personal injury could result.

19. If shield becomes clogged, stop engine, wait until blade completely stops rotating and remove spark plug before cleaning it out.

20. Use trimmer only in daylight or good artificial light.

21. Shut off engine and be certain all moving parts have completely stopped rotating before inverting trimmer.

22. Never operate trimmer without cutting head guard in place.

23. Wear a long sleeve or other similar arm protection to avoid possible contact with hot engine surfaces.

MAINTENANCE

24. Before servicing or making adjustments to the machine, stop the engine and pull wire off spark plug to prevent accidental starting of the engine.

25. Ensure entire machine is in good condition. Keep all nuts, bolts and screws properly tightened.

26. Replace cracked or damaged parts before operating. If major repairs are ever needed or if assistance is desired, contact an Authorized Toro Service Dealer.

27. To reduce potential fire hazard, keep the engine area free of excessive oil, grass, leaves and accumulations of dirt.

28. If the engine must be running to perform a maintenance adjustment, keep hands, feet, clothing and any part of the body away from any moving parts. Keep everyone away.

ASSEMBLY INSTRUCTIONS

INSTALL BLADE

⚠ WARNING

Stop engine and wait for cutting head to stop. Disconnect wire from spark plug before inverting trimmer.

⚠ DANGER

Cutter blade is sharp and may cause personal injury. Care should be taken when handling blade Avoid contact with sharp blade teeth.

⚠ DANGER

Inspect blade before each use and discard if cracked, nicked, bent or damaged in any way.

TC650 and TC3105

1. Remove cutting head assembly installed on trimmer. Refer to Operator's Manual for proper removal instructions.

Note: Blade mounting plate has a cup shaped recess for nut.

2. Install blade (teeth pointing in clockwise direction when viewed from bottom), mounting plate, and nut onto shaft (Fig. 1).

Note: Hole in blade fits over raised diameter of gearbox cap.

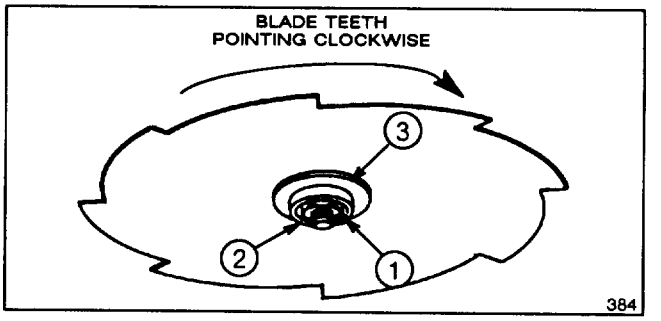

Figure 1

1. Cotter pin **2. Nut** **3. Mounting plate**

3. Rotate gearbox cap until notch in cap is aligned with slot in shield. Insert medium blade screwdriver through slot in shield and into notch in gearbox cap (Fig. 2).

4. Keep shaft from rotating by holding screwdriver as shown and tighten nut securely with wrench (left hand thread) (Fig. 2).

5. Insert cotter pin through hole in shaft and wrap ends around shaft (Fig. 1).

⚠ WARNING

To prevent blade from loosening and causing possible personal injury, the cotter pin must be inserted through hole in shaft and the ends wrapped around shaft as explained in step 5.

Note: If a blade needs sharpening, contact a reputable saw sharpening service.

ASSEMBLY INSTRUCTIONS

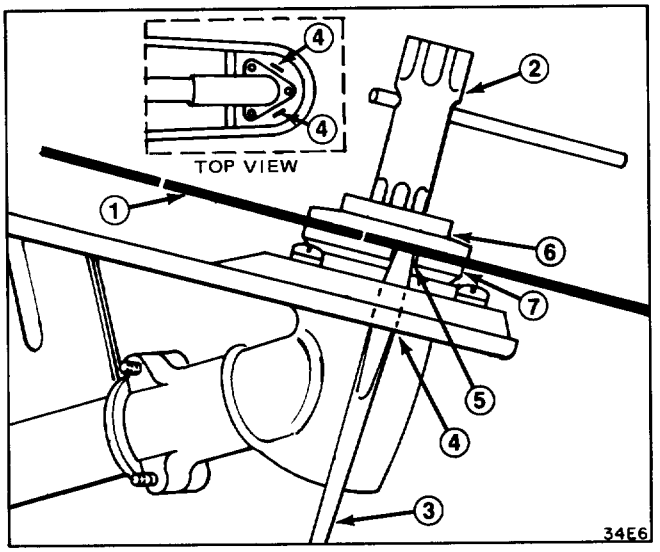

Figure 2

1. Blade
2. Wrench
3. Screwdriver
4. Slot in shield
5. Notch in gearbox cap
6. Mounting plate
7. Gearbox cap

TC600 AND TC700

1. Remove cutting head assembly installed on trimmer. Refer to Operator's Manual for proper removal instructions.

Note: Blade mounting plate has a cup shaped recess for nut.

⚠ DANGER

Cutter blade is sharp and may cause personal injury. Care should be taken when handling blade. Avoid contact with sharp blade teeth.

2. Install blade (teeth pointing in clockwise direction when viewed from bottom), mounting plate, and nut onto shaft (Fig. 3). Insert a locking tool into hole in blade fixing plate, rotate shaft until tool can be inserted through a hole in the gear case casting (Fig. 3).

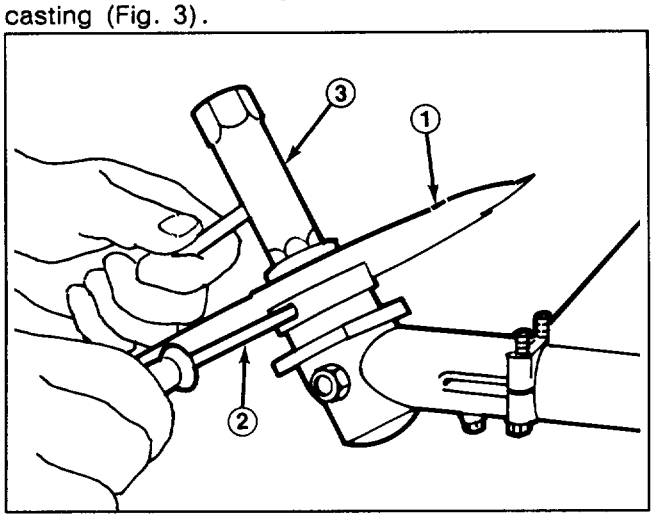

Figure 3

1. Blade 2. Locking tool 3. Wrench

3. Keep shaft from rotating with locking tool and tighten nut securely with wrench (left hand thread) (Fig. 3).

4. Insert cotter pin through hole in shaft and wrap ends around shaft (Fig. 1).

Note: If a blade needs sharpening, contact a reputable saw sharpening service.

⚠ WARNING

To prevent blade from loosening and causing possible personal injury, the cotter pin must be inserted through hole in shaft and the ends wrapped around shaft as explained in step 4.

⚠ DANGER

When using a metal blade cutting attachment, the blade can be suddenly and uncontrollably thrust in any direction when blade strikes a solid object while rotating at high speed. Contact of rotating blade with nearby persons or animals will cause severe injury or death.

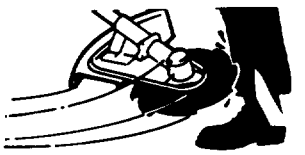

Debris thrown by blade or nylon line cutting attachments can cause severe injury to nearby persons or animals.

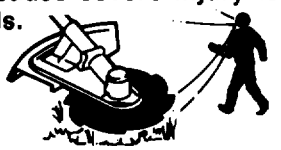

KEEP ALL PEOPLE AND ANIMALS FAR AWAY FROM TRIMMER/BRUSHCUTTER WHILE OPERATING.



⚠ DANGER

DO NOT USE THE 8-TOOTH METAL BLADE CUTTING ATTACHMENT (TORO PART NO. 51-1240) TO CUT WOODY PLANTS MORE THAN 1/2" THICK. THE BLADE MAY FRACTURE RESULTING IN PERSONAL INJURY OR DEATH.

DO NOT USE ANY METAL BLADE IF CRACKED, NICKED, DISTORTED OR DAMAGED IN ANY WAY.

ASSEMBLY INSTRUCTIONS

⚠ WARNING

DEBRIS THROWN BY CUTTING ATTACHMENT CAN CAUSE SEVERE INJURY TO OPERATOR'S EYES. ALWAYS WEAR SAFETY GOGGLES OR SAFETY GLASSES WHILE OPERATING TRIMMER/BRUSHCUTTER.

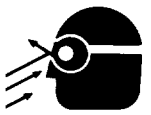

Safety goggles/glasses must comply with the latest ANSI Z 87.1 Standard to ensure adequate eye protection. If you do not have appropriate safety goggles/glasses, you are expected to procure them before operating this product. Safety goggles/glasses can be purchased from a trimmer/brushcutter dealer, hardware stores and industrial supply companies.

⚠ WARNING

OPERATOR CONTACT WITH ROTATING METAL BLADE WILL CAUSE SEVERE INJURY OR DEATH.

Metal blade spins for up to 30 seconds after shutting engine off. REMAIN AT CONTROLS UNTIL BLADE COMPLETELY STOPS.



DO NOT OPERATE TRIMMER/BRUSHCUTTER WITHOUT CUTTING HEAD GUARD IN PLACE.

ALWAYS USE SHOULDER HARNESS WHEN USING METAL BLADE CUTTING ATTACHMENT.



INSTALL HARNESS CLAMP AND RING

1. Insert ring into loop of clamp and install clamp over drive shaft tube between R.H. and L.H. handgrips just ahead of throttle trigger housing as shown. DO NOT POSITION CLAMP ON TOP OF LABELS. Bend both ends of clamp together (Fig. 4).

2. Insert screw through both ends of clamp, keeping ring between screw and top of loop.

3. Thread nut onto screw and position clamp so that ring is on top of tube. Tighten nut and screw.

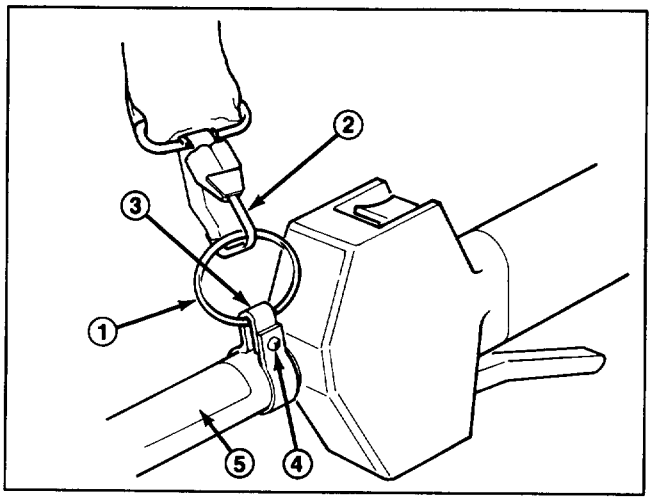

Figure 4

1. Ring
2. Harness hook
3. Loop of harness clamp
4. Screw and nut
5. Label

ATTACH HARNESS

1. Stand on left side of unit, hang harness over left shoulder with harness hook assembly located by right hip (Fig. 5). The double strap loop of the shoulder harness should lie diagonally across chest with harness hook assembly at right hip.

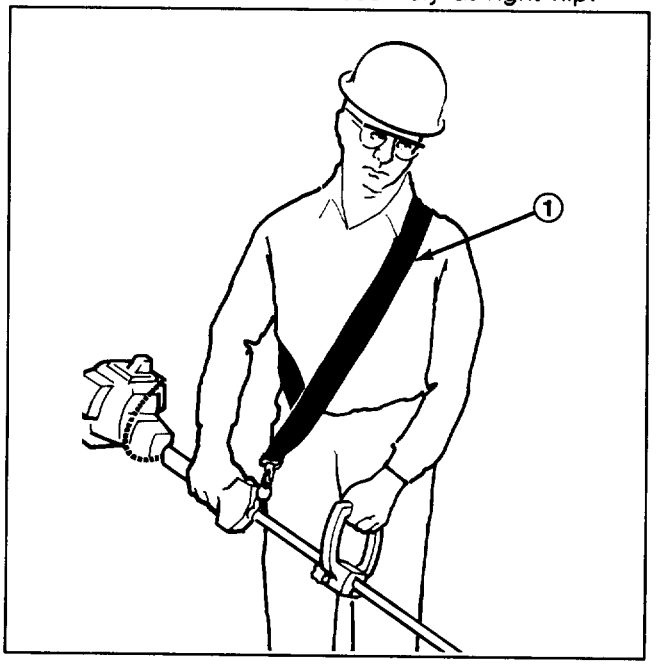

Figure 5

1. Double strap loop

2. Snap harness hook through ring in harness clamp.

3. Adjust harness to comfortable position for holding trimmer.

RELEASE HARNESS

1. Unsnap harness hook from ring (Fig. 4).