FORM NO. 3313-954

TORO®

MODEL NO. 20564 - 0000001 & UP

OPERATOR'S MANUAL

18" (0.46 m) HP 4-in-1 REAR BAGGER

120 VOLT ELECTRIC, DOUBLE INSULATED AND U.L. LISTED

⚠ SAFETY INSTRUCTIONS

BEFORE OPERATING

1. Read this manual carefully before operating the mower. Become familiar with the controls and proper use of the mower. Never allow children to operate the mower or adults to operate it without proper instructions. Use mower for only the job it is intended.

2. Keep everyone, especially children and pets, away from area of operation. Thoroughly inspect area where mower will be used, and remove sticks, stones, wire, and debris.

3. Wear long pants and substantial shoes. Do not operate mower while wearing open sandals, jewelry, loose clothing, or when barefoot. Rubber gloves and footwear are recommended when working outdoors.

4. Avoid dangerous environments—Don't use mower in damp or wet locations. Don't use in the rain.

5. Keep all guards, shields, and safety devices in place. Repair or replace defective or damaged parts, including damaged extension cord. Follow instructions for lubrication and changing accessories.

6. Make sure your extension cord set is in good condition. When using a cord set, be sure to use one heavy enough to carry the current the mower will draw. For lengths less than 150 feet, No. 12 AWG cord set should be used. Do not use cords longer than 150 feet. An undersized cord will cause a drop in line voltage resulting in loss of power and overheating. See page 4, Fig. 2 for the correct size cord to use depending on cord length and nameplate ampere rating. If in doubt, use the next heavier gauge. The smaller the gauge number, the heavier the cord.

7. To reduce the likelihood of disconnecting lawn mower cord from the cord set during operation, attach extension cord to cord guide on mower; refer to page 4, Fig. 3.

WHILE OPERATING

8. Never carry or pull mower by the cord or yank it to disconnect from electrical outlet. Keep cord away from heat, oil, and sharp edges. Mow back and forth. Do not run over cord. Do not carry plugged in mower with finger on switch. Use extension cord suitable for outdoor use (available from Toro dealer).

9. Never operate the mower without proper guard, plates, or other safety protective devices in place.

10. Do not run mower indoors.

11. Always maintain secure footing. Keep a firm grip on the handle and walk; never run. Never operate mower in wet grass or in the rain. Mow only in daylight or in good artificial light.

12. Do not force the lawnmower. It will do the job better and safer at the rate for which for which it was designed.

13. Mow across the face of slopes; never up and down. Use extreme caution when changing direction on slopes. Do not mow excessively steep slopes.

14. Always wear safety glasses or eye shields during operation to protect eyes from foreign objects that may be thrown from the machine.

©The Toro Company-1989

⚠ SAFETY INSTRUCTIONS

15. Keep face, hands, and feet away from the mower housing and cutter blade when the engine is running. Stay behind the handle until the motor stops and keep clear of discharge opening at all times.

16. When mulching, keep grass bag in place and assure discharge door is closed. When bagging grass, stop motor and assure chute door is closed before the bag is removed and emptied.

17. Shut motor off and wait for all moving parts to stop before unclogging chute.

18. Since the blade rotates for a few seconds after the control bar is released, stay behind the handle until all moving parts stop.

19. After striking a foreign object or if mower vibrates abnormally, stop motor and disconnect extension cord from electrical outlet and mower. Check mower for damage and make all repairs before using mower again.

20. If the mower should start to vibrate abnormally, stop the engine (motor) and check immediately for the cause. Vibration is generally a warning of trouble.

21. Stop the motor and disconnect extension cord from electrical outlet and mower before adjusting the height–of–cut.

22. Stop the motor before crossing a gravel driveway, road, or sidewalk.

23. Stop motor before leaving the operator's position—behind the handle. Disconnect extension cord from outlet and mower if mower will be unattended.

MAINTENANCE

24. Perform only those maintenance instructions described in this manual. If major repairs are ever needed or if assistance is desired, contact your local Authorized TORO Service Dealer.

25. Before mower is cleaned, inspected, serviced, or adjusted, shut off motor and disconnect extension cord from electrical outlet and mower.

26. To assure the mower is in safe operating condition, frequently check and keep all nuts, bolts, and screws tight. Assure blade bolt is tight. Keep blade sharp and clean for best and safest performance. Use only identical Toro replacement parts.

27. To reduce fire hazard, keep motor free of excessive grease, grass, leaves, and accumulations of dirt.

28. Check grass catcher bag frequently for wear or deterioration. If worn, replace with a new bag for your protection.

29. Do not wash mower motor or underside of deck with a garden hose.

30. Store mower in a dry, high, locked–up place out of a child's reach.

31. At the time of manufacture, the mower and accessories conformed to the safety standards in effect for rotary mowers. To assure optimum performance and continued safety certification of the mower, use genuine identical TORO replacement parts and accessories. Replacement parts and accessories made by other manufacturers may result in non–conformance with the safety standards, and that could be dangerous.

⚠ SAFETY DECALS

Safety decals and instructions are easily visible to the operator and are located near any area of potential danger. Replace any decal that is damaged.

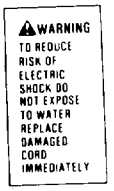

ON HANDLE
(Part No. 50-9640)



ON DISCHARGE CHUTE
(Part No. 50-9650)



ON HANDLE
(Part No. 50-9600)



ON MOWER HOUSING
(Part No. 50-9620)

TABLE OF CONTENTS

	Page
Set-Up Instructions	3
Before Operating	4
Operating Instructions	5–7
Maintenance	7–9
Cleaning Mower Housing	7
Inspecting/Removing/Sharpening Blade	7–8
Lubrication	8
Clean Motor Filter	8–9
Replace Brushes in Motor	9
Preparing Mower For Storage	9
Product Identification	9
Toro Service Support	9
Maintenance Record	10–11
The Toro Promise	

SET-UP INSTRUCTIONS

INSTALL HANDLE AND BAG

1. Push ends of lower handle together and install on pivot pins (Fig. 1). Insert bolts through hole in handle latches and install handle knobs (Fig. 1). Tighten securely. Assure electric cord runs between handle and handle latch (Fig. 1).

Note: Handle can be set in any of three positions, depending on operator height.

2. Secure electric cord to handle with a nylon tie (Fig. 1). Position nylon tie approximately 1-1/2" above handle pivot pin. Before tightening nylon tie, pull electric cord tight between nylon tie and cord clamp on mower housing (Fig. 1). CORD MUST NOT TOUCH WHEEL DURING OPERATION.

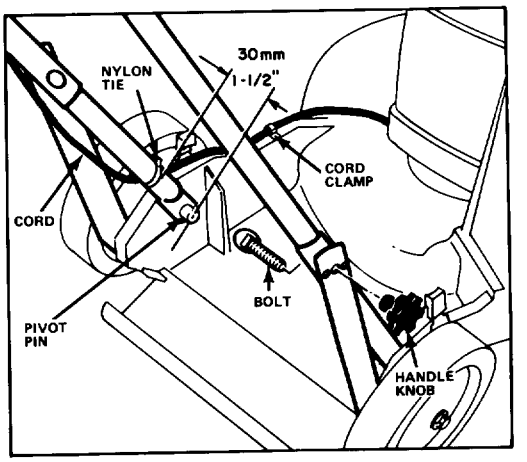

Figure 1

3. Install grass bag: refer to Using Grass Bag, pages 5–6, steps 1–4.

BEFORE OPERATING

EXTENSION CORD REQUIREMENTS

Use an extension cord suitable for outdoor use and one that complies with the requirements specified in the International Electric Code. Make sure your cord is in good condition; if damaged, replace. Use a cord that is heavy enough to carry the current the mower will draw. Fig. 2 shows the correct size cord to use depending on cord length and ampere rating.

Note: When in doubt about what size cord to use, choose the next heavier gage. The smaller the gage number, the heavier the cord. An undersized cord causes a drop in line voltage which results in a loss of power and overheating.

EXTENSION CORD CHART

If length of extension cord is less than or equal to:	25 ft.	50 ft.	100 ft.	150 ft.
Assure wire size (A.W.G.) in cord is:	18	16	14	12

Figure 2

CONNECTING EXTENSION CORD

1. Before connecting extension cord to mower plug, attach extension cord to cord guide on mower (Fig. 3). Pull enough cord through loop so cord guide can slide from side to side when cord is connected to mower plug.

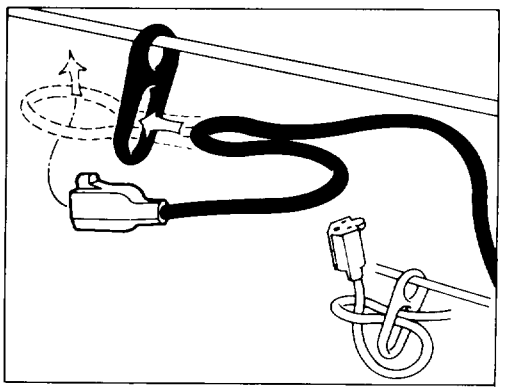

Figure 3

PLAN YOUR MOWING PATTERN

1. Begin mowing near the electrical outlet and work outward (Fig. 4). Mow back and forth.

IMPORTANT: By following the suggested mowing pattern (Fig. 4), the extension cord will not sustain unnecessary wear. Do not allow extension cord to wrap around trees, shrubs, or other obstacles.

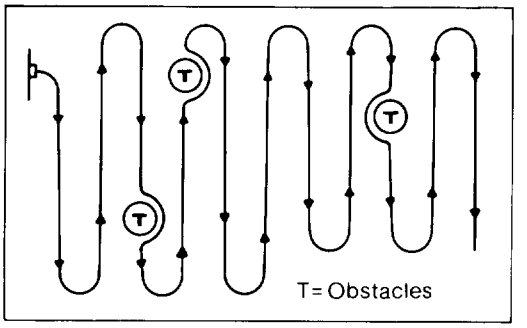

Figure 4

2. When turning around at the end of a cut path, step over the cord and turn mower (Fig. 5). The cord automatically slides to the other side and allows mowing to continue.

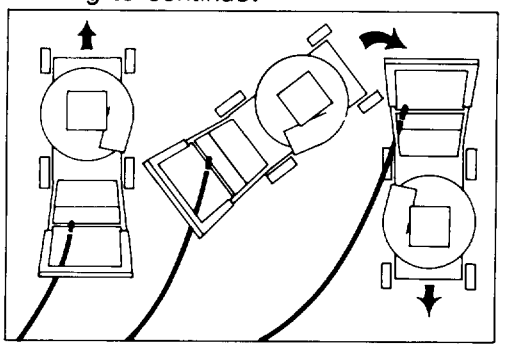

Figure 5

OPERATING INSTRUCTIONS

4-in-1 MOWING VERSATILITY

REAR BAG—Bag lush grass in the spring to help keep your lawn free of thatch forming clippings.

MULCH—In summer when grass grows slower and is drier, mulch by closing chute door (Fig. 6). For convenience and protection, keep grass bag on mower.

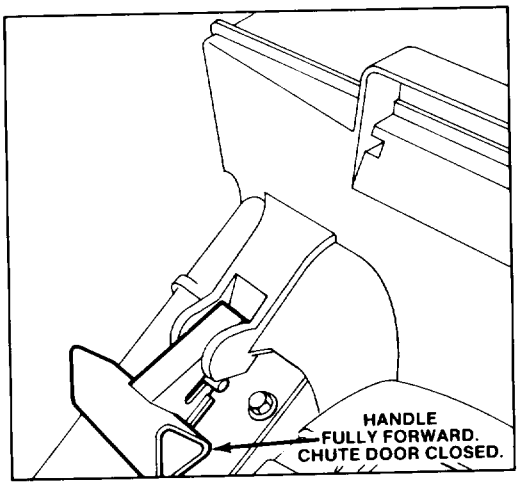

Figure 6

SIDE DISCHARGE—Disperse clippings with optional, rear-mounted side discharge chute which installs in seconds (Fig. 7).

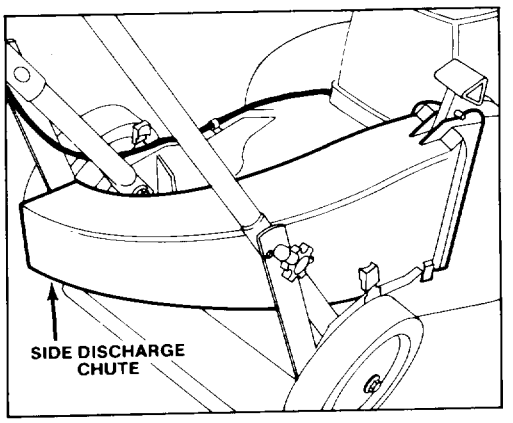

Figure 7

SHRED LEAVES—In fall, optional leaf shredder (Fig. 8) reduces leaves to a fraction of their original size while you bag. Minimizes emptying stops and number of trash bags used for disposal.

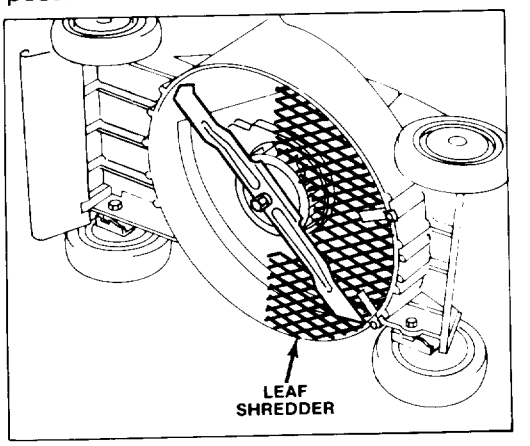

Figure 8

STARTING AND STOPPING (Fig. 9)

1. CONTROLS—Gray button, control lever, and black start button are on upper handle.

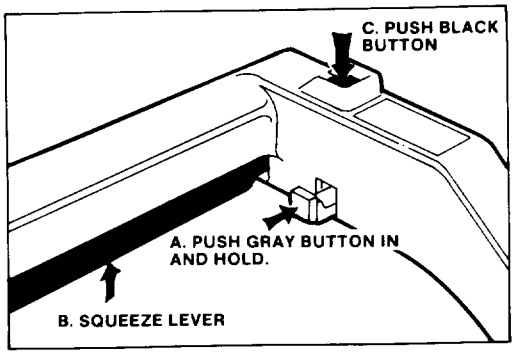

Figure 9

2. STARTING—Push and hold gray button in. Squeeze control lever and hold continuously. Release gray button and push down on black button to start. Blade spins while motor is running.

3. STOPPING—Release control lever and wait for all moving parts to stop. Disconnect and remove extension cord.

OPERATING INSTRUCTIONS

USING GRASS BAG

Keep bag installed when bagging or mulching.

1. Stop motor and wait for all parts to stop.

2. Assure chute door handle is fully forward and pin is engaged in catch (Fig. 6).

3. INSTALLING BAG (Fig. 10)—Hold front of bag frame and bag door together. Then place opening in bag door against flanges on rear chute and slide bag door down.

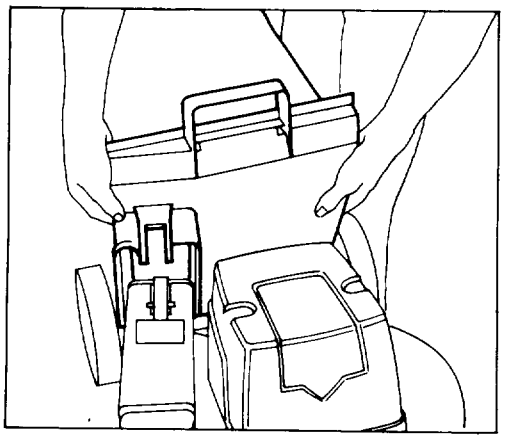

Figure 10

4. Pull chute door handle backward until pin locks bag in place (Fig. 11). Chute door in mower housing is now open.

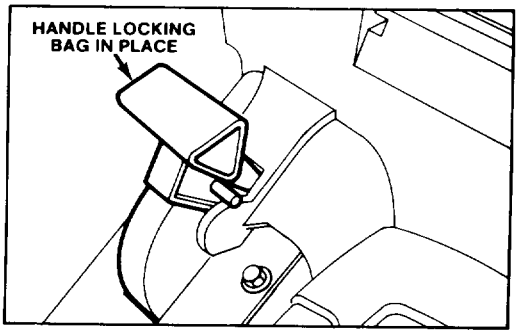

Figure 11

⚠ CAUTION

Except when side discharge attachment is used, never open chute door on mower when motor is running unless grass bag is properly installed because grass clippings and other debris discharges with enough force to cause injury.

The grass bag material will catch and contain the majority of foreign objects such as small stones and other similar debris. The bag material, however, is subject to normal wear and deterioration. So check the bag frequently, and if it is defective, install a new genuine TORO replacement bag that has this or similar warning.

5. EMPTYING BAG—Stop motor and wait for all parts to stop. Move chute door handle forward to engage the locking pin with catch (Fig. 6). Grasp bag handle and rear of bag and lift bag off mower. Gradually tip bag forward to empty clippings.

⚠ CAUTION

If chute door cannot be closed because grass clippings clog discharge area, gently move chute door handle back and forth until door can be closed completely. Do not force chute door closed because door or handle may be damaged. If door still cannot be closed, stop motor, disconnect extension cord, and remove obstruction.

OPERATING INSTRUCTIONS

6. To reinstall bag, repeat steps 3–4.

OPERATING TIPS

1. CUTTING AND BAGGING—Best results are achieved when only about 1/3 of the grass blade is cut. If long grass must be cut, use highest height-of-cut setting for first mowing. Then recut the grass at a more normal setting. If too long of grass is cut, mower may plug and cause motor to overheat.
2. SHARP BLADE—Begin each cutting season with a sharp blade. Periodically file down nicks.

ADJUSTING HEIGHT-OF-CUT

Five letters cast into the housing represent the graduated height-of-cut settings.

1. Stop the motor and disconnect the extension cord.
2. For easier adjustment, lift housing up so wheel is off ground. Squeeze adjusting lever toward wheel and move to desired setting (Fig. 12). Assure pin on adjusting lever engages notch in housing. Adjust all wheels to the same setting.

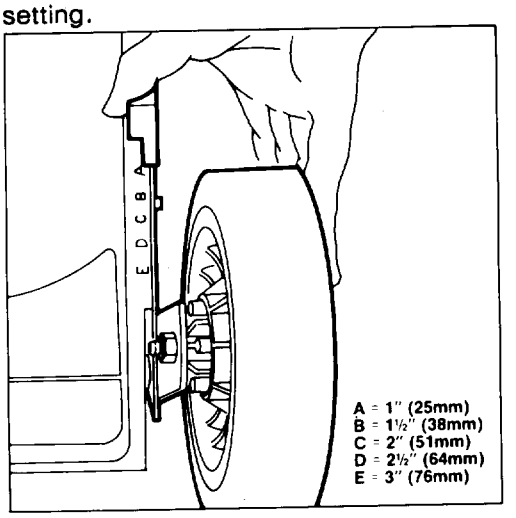

Figure 12

MAINTENANCE

⚠ CAUTION

Disconnect extension cord from mower and electrical outlet before performing adjustments or maintenance.

CLEANING MOWER HOUSING

To assure optimum performance, keep underside of mower housing and grass deflector clean.

1. Disconnect extension cord from mower and electrical outlet.
2. Tip mower on its left side.
3. Remove dirt and grass clippings that stick to housing by scraping out debris with hardwood scraper. Avoid burrs and sharp edges.

IMPORTANT: Do not clean mower or mower housing by spraying it with a garden hose because water will likely get into the motor and cause damage.

INSPECTING/REMOVING/SHARPENING BLADE

1. Stop motor and disconnect extension cord from mower and electrical outlet.
2. Tip mower on its left side.
3. INSPECTING BLADE—Carefully examine blade for sharpness and wear, especially where flat and curved parts meet (Fig. 13A). Since sand and abrasive material can wear away the metal that connects the flat and curved parts of the blade, check blade before using the mower. If a slot or wear is noticed, (Fig. 13B & C), replace blade. Refer to step 5.

MAINTENANCE

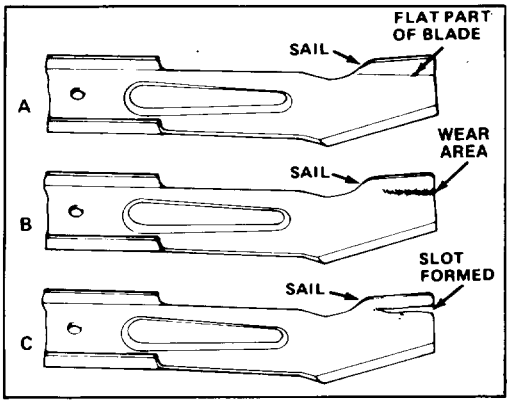

Figure 13

CAUTION

If blade is allowed to wear, a slot may form near the sail. Eventually a piece of blade may break off resulting in serious injury to yourself or a bystander.

4. REMOVING BLADE—Grasp end of blade, not the plastic fan that can break, using a rag or thickly padded glove. Remove blade bolt, lockwasher, spacer, and blade (Fig. 14).

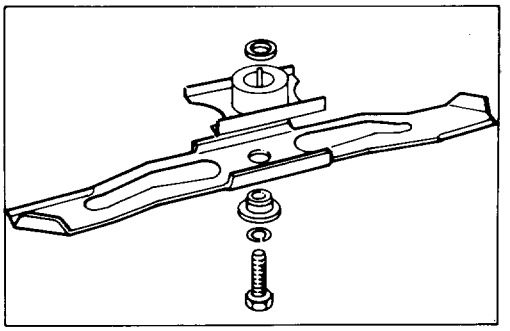

Figure 14

Note: For optimum performance, install new, identical Toro blade before cutting season begins. During the year, file down small nicks to maintain the cutting edge.

5. SHARPENING BLADE—Using a file, sharpen top side of blade (side facing mower housing) and maintain original cutting angle (Fig. 15). The blade will remain balanced if the same amount of material is removed from both cutting edges.

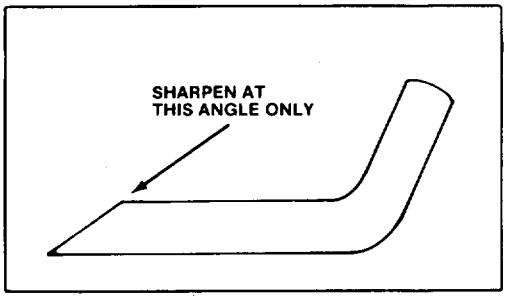

Figure 15

IMPORTANT: Check balance of blade by putting it on a blade balancer. An inexpensive balancer can be purchased at a hardware store. A balanced blade will stay in a horizontal position and an unbalanced blade will settle to the heavy side. If the blade is not balanced, file more metal off cutting edge on heavy end of blade.

6. Install sharp, balanced blade with spacer. Sail part of blade must point toward top of mower housing to assure correct installation. Tighten the blade bolt to 18 ft-lb (24.4 N·m).

LUBRICATION

After every 25 operating hours or when season ends, front and rear wheels must be lubricated.

1. Apply 2 or 3 drops of light oil on inside of front and rear wheel bolts. Spin wheels to distribute oil into bushings.
2. Wipe up excess oil.

CLEAN MOTOR FILTER

After every 50 hours of operation or yearly, whichever comes first, motor cover must be removed and filter cleaned. Service filter more often in dusty, dirty conditions.

1. Stop motor and disconnect extension cord from mower and electrical outlet.

MAINTENANCE

2. Remove (2) nuts and washers securing motor cover to motor.

3. Carefully remove filter to prevent dirt and debris from entering motor.

4. Clean filter by tapping until cleared of dirt and debris.

5. Reinstall filter and secure motor cover to motor with washers and nuts.

REPLACE BRUSHES IN MOTOR

IMPORTANT: After every 150 hours of operation or after 3 years, whichever comes first, have brushes inspected by an Authorized TORO Service Dealer. Replace worn brushes.

PREPARING MOWER FOR STORAGE

1. Clean underside of housing: refer to Cleaning Mower Housing, page 7.
2. Check condition of blade: refer to Inspecting/Removing/Sharpening Blade, page 7-8.
3. Tighten all nuts, bolts, and screws.
4. Lubricate the wheels: refer to Lubrication, page 8.
5. Touch up all rusted or chipped paint surfaces. Toro Re-Kote paint is available from an Authorized TORO Service Dealer.
6. Store mower in a clean, dry place, up high or locked-up—out of the reach of children. Cover mower to keep it clean and protected.

PRODUCT IDENTIFICATION

A model and a serial number decal is located at rear of mower housing, near the discharge door. Always refer to specific numbers on this decal in correspondence or when replacement parts are needed.

TORO SERVICE SUPPORT

If help - concerning safety, set-up, operation and maintenance or troubleshooting - is ever needed, contact the local Authorized TORO Service Dealer or Distributor. Refer to the "Yellow Pages" for assistance. In addition to skilled service technicians, the dealer and distributor have factory approved accessories and replacement parts. Keep your Toro all TORO. Buy genuine TORO replacement parts and accessories.

MAINTENANCE RECORD

Date	Hours Used					

MAINTENANCE RECORD

Date	Hours Used					

The Toro Promise

A Two Year Limited Warranty
On
Model 20564 – Rear Bagger

The Toro Company promises to repair these TORO Products if defective in materials or workmanship. The following time periods from the date of purchase apply:

Residential Product ..... 2 Years
Residential Products Used Commercially ..... 45 Days

The cost of parts and labor are included, but the customer pays the transportation costs. Just return any residential product to an Authorized TORO Service Dealer or TORO Distributor.

Should you feel your TORO Product is defective and wish to rely on The Toro Promise, the following procedure is recommended:

1. Contact any Authorized TORO Service Dealer, TORO Master Service Dealer, or TORO Distributor (the Yellow Pages of your telephone directory is a good reference source).
2. He will either instruct you to return the product to him or recommend another Authorized TORO Service outlet which might be more convenient.
3. Bring the product along with your original sales slip, or other evidence of purchase date, to the service dealer.
4. The servicing dealer will inspect the unit, advise you whether the product is defective and, if so, make all repairs necessary to correct the defect without any extra charge to you.

If for any reason you are dissatisfied with the analysis of the defect or the service performed, you may contact us.

Write: **TORO Customer Service Dept.**
8111 Lyndale Avenue South
Minneapolis, MN 55420

The above remedy of product defects through repair by an Authorized TORO Service Dealer is the purchaser's sole remedy for any defect.

THERE IS NO OTHER EXPRESS WARRANTY. ALL IMPLIED WARRANTIES OF MERCHANTIBILITY AND FITNESS FOR USE ARE LIMITED TO THE DURATION OF THE EXPRESS WARRANTY.

Some states do not allow limitation on how long implied warranty lasts, so the above limitation may not apply to you.

This warranty applies only to parts or components which are defective and does not cover repairs necessary due to normal wear, misuse, accidents, or lack of proper maintenance. Regular, routine maintenance of the unit to keep it in proper operating condition is the responsibility of the owner.

All warranty repairs reimbursable under The Toro Promise must be performed by an Authorized Toro Service Dealer using Toro approved replacement parts.

Repairs or attempted repairs by anyone other than an Authorized TORO Service Account are not reimbursable under the TORO Promise. In addition, these unauthorized repair attempts may result in additional malfunctions, the correction of which is not covered by warranty.

THE TORO COMPANY IS NOT LIABLE FOR INDIRECT, INCIDENTAL, OR CONSEQUENTIAL DAMAGES IN CONNECTION WITH THE USE OF THE PRODUCT INCLUDING ANY COST OR EXPENSE OF PROVIDING SUBSTITUTE EQUIPMENT OR SERVICE DURING PERIODS OF MALFUNCTION OR NON-USE.

Some states do not allow the exclusion of incidental or consequential damages, so the above exclusion may not apply to you.

This warranty gives you specific legal rights, and you may also have other rights which vary from state to state.