FORM NO. 3314-256

TORO®

Model No. 04120

INSTALLATION INSTRUCTIONS

TRANSPORT WHEEL KIT

GREENSMASTER 1000

Since this instruction sheet covers only a minimal amount of information necessary to maintain and operate your machine, we suggest that you keep this material with your Operator's Manual so that both may be referred to for instructions concerning safe operation and proper maintenance procedures.

INSTALL KICK STAND

1. Secure each side of kickstand to inside of rear mounting brackets with a capscrew, spacer, washer and locknut (Fig. 1).

2. Remove the (2) capscrews and lockwashers securing the right sideplate to the rear frame cross member (Fig. 1).

3. Mount spring bracket to the right sideplate with (2) capscrews and lockwashers supplied in kit (Fig. 1).

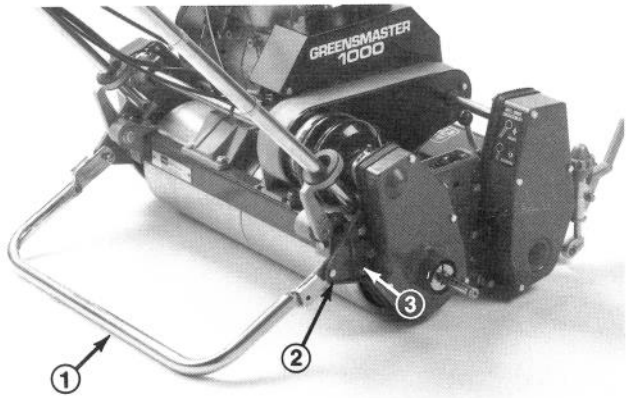

Figure 1
1. Kickstand
2. Mounting bracket
3. Spring bracket

4. Hook spring onto spring retainer (Fig. 2). End of spring to be positioned in groove on spring retainer.

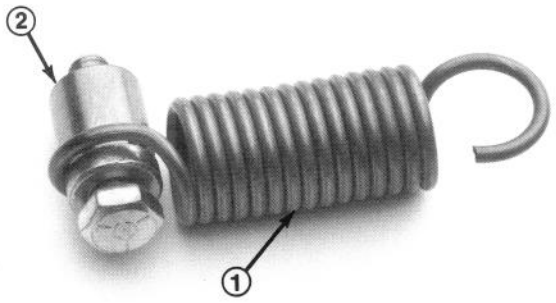

Figure 2
1. Spring
2. Spring retainer

5. Hook spring onto bracket on right side of mower. Pivot kickstand upward and secure spring retainer to kick stand with a 5/16-18 x 2" lg. capscrew, washer and locknut (Fig. 3).

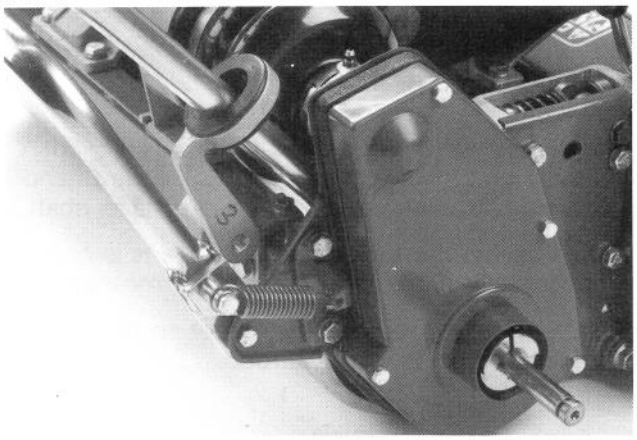

Figure 3

6. To release kick stand, pull up on handle, retract kickstand with foot and lower mower to the ground.

INSTALL TRANSPORT WHEELS

1. Push kick stand down with foot and pull up on handle to support mower on kick stand.

2. Remove capscrews securing rear belt covers to machine and remove covers (Fig. 4).

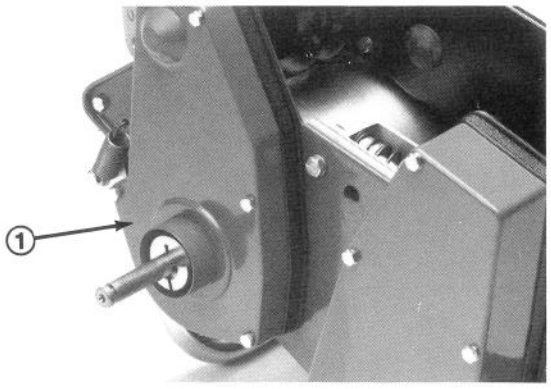

Figure 4
1. Rear belt cover

3. Slide a lock collar onto axle. Be sure the step in the collar faces out and the key on the axle engages the key way in the lock collar (Fig. 5).

© The TORO Company -1990

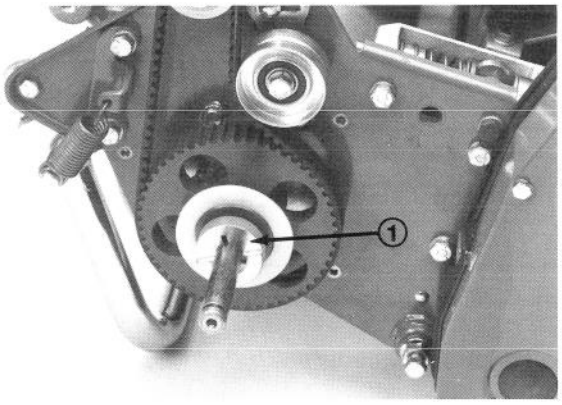

Figure 5
1. Locking collar

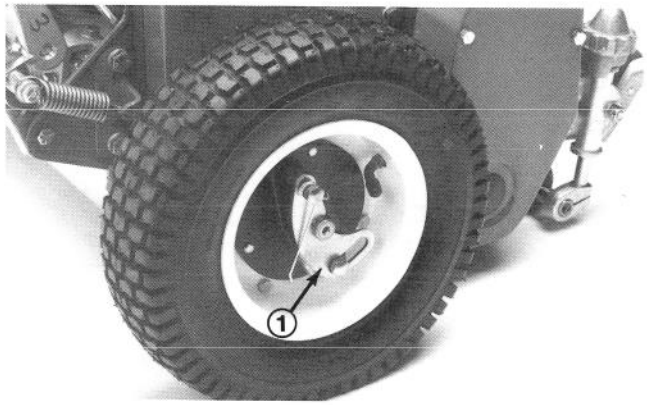

Figure 6
1. Locking clip

4. Slide wheel onto axle (Fig. 6).

5. Pivot wheel locking clip away from center of wheel allowing wheel to slide farther onto axle (Fig. 6).

6. Rotate wheel back and forth until it slides completely onto axle engaging with collar jaws and locking clip is secured in groove on axle shaft.

7. Position the lock collar so there is a gap of approximately .030 inch between the meshing jaws.

8. Carefully, remove the wheel so the position of the lock collar is not disturbed.

9. Tighten set screw, securing lock collar to axle. Torque set screw to 110 -140 in-lb.

10. Repeat procedure on opposite side of machine.

11. Reinstall belt covers.

12. Apply Never-Seez to the exposed ends of axles and install wheels.

13. To release kick stand, pull up on handle, retract kickstand with foot and lower mower to the ground.

14. Tires to be inflated to 15 psi.