FORM NO. 3314-195

TORO®

MODEL NO. 04118

INSTALLATION INSTRUCTIONS

WIEHLE ROLLER KIT

GREENSMASTER 1000

Since this instruction sheet covers only a minimal amount of information necessary to maintain and operate your machine, we suggest that you keep this material with your Operator's Manual so that both may be referred to for instructions concerning safe operation and proper maintenance procedures.

1. Loosen carriage bolts, washers, and locknuts securing roller adjusting screws to height-of-cut brackets (Fig. 1).

2. Loosen height-of-cut adjusting knobs until adjusting screws may be removed from height-of-cut brackets (Fig. 1).

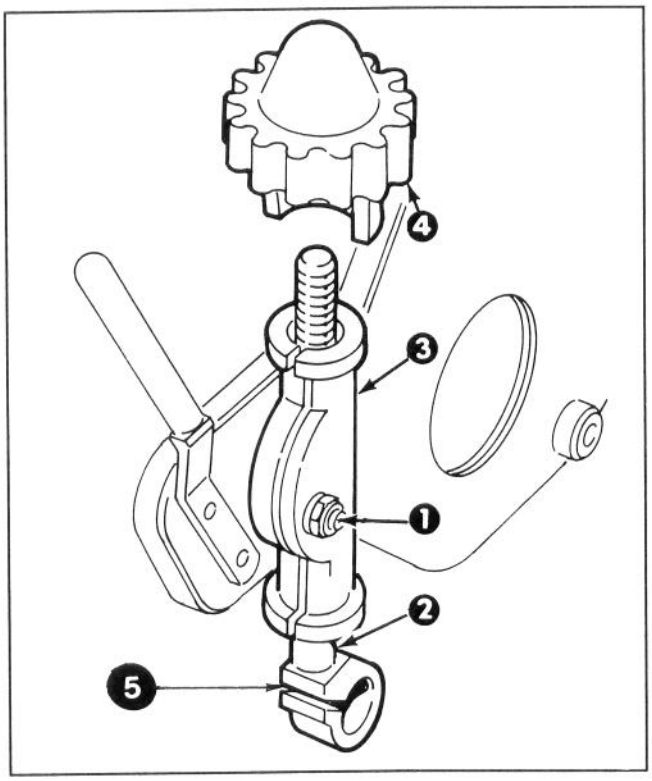

Figure 1

1. Carriage bolt, washer and locknut
2. Roller adjusting screw
3. Height-of-cut bracket
4. Adjusting knob
5. Opening in Roller Adjusting Screw

3. Loosely mount scraper assembly to the roller with (4) lockwashers and nuts (Fig. 2).

4. Slide roller adjusting screws onto roller shaft (Fig. 2).

5. Reinstall roller adjusting screws into height-of-cut brackets until top of adjusting screws are flush with top of adjusting brackets. Slide height-of-cut knobs onto adjusting brackets and thread onto adjusting screws (Fig. 3)

Note: Make sure the opening in roller adjusting screw (Fig. 1) points toward the rear of the cutting unit when a groomer is mounted and points to the front when groomer is not attached.

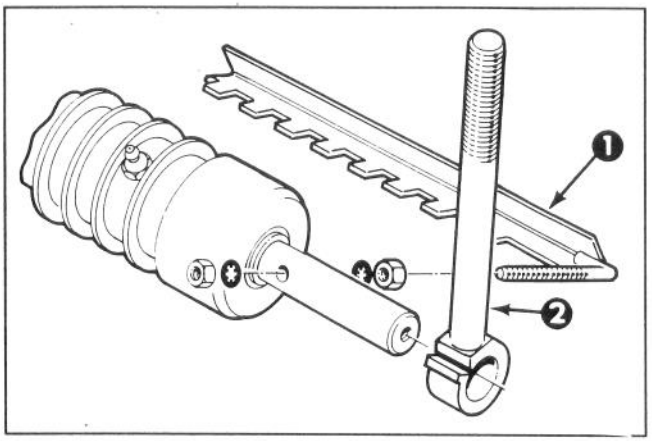

Figure 2

1. Scraper assembly
2. Roller adjusting screw

6. Tighten capscrews and lockwashers securing roller adjusting screws to roller (Fig. 3).

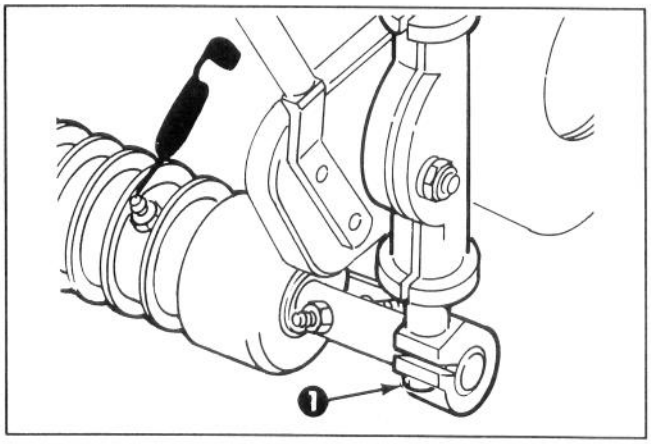

Figure 3

1. Capscrew and lockwasher

7. After roller installation is completed, readjust height-of-cut and scraper assembly per instructions in Operator's Manual.

8. After every 50 hours of operation, grease roller with No. 2 multi-purpose lithium base grease.

© The TORO Company -1989