FORM NO. 3313-833

TORO®

MODEL: 30568 — 00001 & UP

OPERATOR'S MANUAL

52" REAR DISCHARGE CUTTING UNIT

TORO®
THIS UNIT CONFORMS TO ANSI B71.4 - 1984

To assure maximum safety, optimum performance, and to gain knowledge of the machine, it is essential that you or any other operator of the machine read and understand the contents of this manual before the engine is started. Pay particular attention to the instructions highlighted by the triangular safety alert symbol. Failure to comply with the safety instructions may result in personal injury.



FOREWORD

The cutting unit has advanced concepts in engineering, design and safety; and if maintained properly, will give excellent service.

Since it is a high-quality product, Toro is concerned about the future use of the machine and safety of the user. Therefore, read this manual to familiarize yourself with proper set-up, operation and maintenance instructions. The major sections of the manual are:

1. Safety Instructions
2. Set-up Instructions
3. Before Operating
4. Lubrication
5. Maintenance

Certain information in this manual is emphasized. DANGER, WARNING and CAUTION identify personal safety-related information. IMPORTANT identifies mechanical information demanding special attention. Be sure to read this directive because it deals with the possibility of damaging a part or parts of the machine. NOTE identifies general information worthy of special attention.

TABLE OF CONTENTS

	Page
SAFETY INSTRUCTIONS	2-4
SAFETY AND INSTRUCTION DECALS	4
SPECIFICATIONS	5
LOOSE PARTS	5
SET-UP INSTRUCTIONS	6-9
Install Carrier Frame	6
Install Cutting Unit	6
Install Weight Transfer Kit	6
BEFORE OPERATING	9-10
Adjusting Height-of-Cut	9
Check Lubricant in Gear Box	9
OPERATING INSTRUCTIONS	10
Tension Spring Adjustment	10
LUBRICATION MAINTENANCE	11
Grease Bearings, Bushings and Gear Box	11
CUTTING UNIT MAINTENANCE	12-18
Troubleshooting	12
Separating Cutting Unit From Traction Unit	13
PTO Shaft Removal	13
Servicing Bushings in Castor Arms	13
Servicing Castor Wheel and Bearing	14
Checking for Bent Blade	14
Removing Cutter Blade	15
Checking Sail and Sharpening Cutter Blade	15
Correcting Cutting Unit Mismatch	16
Adjusting Idler Pulley	17
Replacing Drive Belt	18
IDENTIFICATION AND ORDERING	19
SERVICE INTERVAL CHART	19
THE TORO PROMISE	20

SAFETY INSTRUCTIONS



This safety alert symbol means CAUTION, WARNING or DANGER — "personal safety instruction". Read and understand the instruction because it has to do with safety. Failure to comply with the instruction may result in personal injury.

The cutting unit has been tested and certified by TORO for compliance with the B71.4 — 1984 specifications of the American National Standards Institute. However, improper use or maintenance of the machine can result in injury. To reduce the potential for injury, comply with the following safety instructions.

BEFORE OPERATING

1. Read and understand the contents of this Operator's Manual before operating the machine. Become familiar with all controls and know how to stop quickly. A free replacement manual is available by sending complete Model and Serial Number to:

The Toro Company
8111 Lyndale Avenue South
Minneapolis, Minnesota 55420

COPYRIGHT © ALL RIGHTS RESERVED
The Toro Company — 1989
MINNEAPOLIS, MN 55420 — U S A

SAFETY INSTRUCTIONS

2. Do not allow children to operate the machine. Do not allow adults to operate the machine without proper instruction.

3. Remove all debris or other objects that might be picked up and thrown by the cutter blades. Keep all bystanders away from the mowing area.

4. Keep all shields and safety devices in place. If a shield, safety device or decal is malfunctioning, illegible or damaged, repair or replace it before operation is commenced. Also tighten any loose nuts, bolts and screws to assure machine is in safe operating condition.

5. Do not operate machine while wearing sandals, tennis shoes, sneakers or shorts. Also, do not wear loose fitting clothing which could get caught in moving parts. Always wear long pants and substantial shoes. Wearing safety glasses, safety shoes and a helmet is advisable and required by some local ordinances and insurance regulations.

6. Make sure interlock switches are adjusted correctly so engine cannot be started unless traction pedal is released – neutral position – and PTO lever is in DISENGAGE position.

7. Fill fuel tank with fuel before starting the engine. Avoid spilling fuel. Since fuel is flammable, handle it carefully.

A. Use an approved fuel container

B. Do not fill tank while engine is hot or running.

C. Do not smoke while handling fuel.

D. Fill fuel tank outdoors and up to about one inch (25 mm) from top of the tank, not the filler neck.

E. Wipe up any spilled fuel.

WHILE OPERATING

8. Do not run the engine in a confined area without adequate ventilation. Exhaust fumes are hazardous and could possibly be deadly.

9. Maximum seating capacity is one person. Never carry passengers.

10. Sit on the seat when starting the engine and operating the machine.

11. Before starting the engine:

A. Engage parking brake.

B. Ensure traction pedal is in neutral and PTO is in OFF, disengage position.

C. After engine is started, release parking brake and keep foot off traction pedal. Machine must not move. If movement is evident, the neutral return mechanism is adjusted incorrectly; therefore, shut engine off and adjust until machine does not move when traction pedal is released.

12. Using the machine demands attention, and to prevent loss of control:

A. Mow only in daylight or when there is good artificial light.

B. Watch for holes or other hidden hazards.

C. Do not drive close to a sand trap, ditch, creek or other hazard.

D. Reduce speed when making sharp turns and when turning on hillsides.

E. Avoid sudden stops and starts.

F. Before backing up, look to the rear and be sure no one is behind the machine.

G. Watch for traffic when near or crossing roads. Always yield the right-of-way.

13. If the cutting unit discharge area ever plugs, disengage PTO and shut engine off before removing the obstruction.

14. Never raise the cutting unit while the blades are rotating.

15. If the cutting blades strike a solid object or the machine vibrates abnormally, disengage PTO, move throttle to SLOW, set parking brake and shut engine off. Remove key from switch and high tension wire from spark plug to prevent possibility of accidental starting. Check cutting unit and traction unit for damage and malfunctioning parts. Repair any damage before restarting the engine and operating the cutting unit. Be sure blades are in good condition and blade bolts are tight.

16. Cut grass slopes carefully. Do not start, stop, or turn suddenly.

17. Do not touch engine or muffler while engine is running or soon after it is stopped. These areas could be hot enough to cause a burn.

18. Before getting off the seat:

A. Move traction pedal to neutral position and remove foot from pedal.

B. Set the parking brake and disengage the PTO.

C. Shut the engine off and remove key from ignition switch. Wait for all movement to stop before getting off the seat.

SAFETY INSTRUCTIONS

19. Lower the cutting unit to the ground and remove key from ignition switch whenever machine is left unattended.

MAINTENANCE

20. Remove key from ignition switch on all machines and disconnect high tension wire from spark plug on gasoline engines to prevent accidental starting of the engine when servicing, adjusting or storing the machine.

21. Perform only those maintenance instructions described in this manual. If major repairs are ever needed or assistance is desired, contact an Authorized Toro Distributor.

22. To reduce potential fire hazard, keep the engine free of excessive grease, grass, leaves and accumulations of dirt.

23. Be sure machine is in safe operating condition by keeping nuts, bolts and screws tight. Check the blade mounting bolts frequently to be sure they are tight (85 to 110 ft-lb) (115 to 149 N·m).

24. Make sure all hydraulic line connectors are tight, and all hydraulic hoses and lines are in good condition before applying pressure to the system.

25. Keep body and hands away from pin hole leaks or nozzles that eject hydraulic fluid under high pressure. Use paper or cardboard, not hands, to search for leaks. Hydraulic fluid escaping under pressure can have sufficient force to penetrate skin and do serious damage. If fluid is injected into the skin it must be surgically removed within a few hours by a doctor familiar with this form of injury or gangrene may result.

26. Before disconnecting or performing any work on the hydraulic system, all pressure in system must be relieved by stopping engine and lowering implement to the ground.

27. If the engine must be running to perform a maintenance adjustment, keep hands, feet, clothing and other parts of the body away from the cutting unit blades and other moving parts.

28. Do not overspeed the engine by changing governor settings. To be sure of safety and accuracy, have an Authorized TORO Distributor check maximum engine speed with a tachometer.

29. Engine must be shut off before checking oil or adding oil to the crankcase.

30. At the time of manufacture the cutting unit conformed to safety standards in effect for riding mowers. Therefore, to ensure optimum performance and safety, always purchase genuine TORO replacement parts and accessories to keep the Toro all TORO. NEVER USE "WILL-FIT" REPLACEMENT PARTS AND ACCESSORIES MADE BY OTHER MANUFACTURERS. Look for the TORO logo to assure genuineness. Using unapproved replacement parts and accessories could void the warranty of The Toro Company.

SAFETY AND INSTRUCTION DECALS



The following decals are installed on the machine. If any become damaged or illegible, replace it. The decal part number is listed in your parts catalog. Replacement can be ordered from your Authorized Toro Distributor.

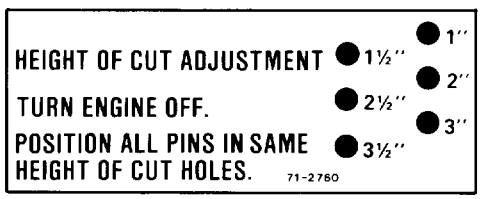

ON LEFT SIDE OF CARRIER FRAME
(Part No. 71-2760)



ON BOTH SIDES
OF CUTTING UNIT
(Part No. 43-8480)



AT CENTER AND LEFT OF CUTTING UNIT
(Part No. 66-1340)



ON BOTH SIDES OF CUTTING UNIT,
UNDER COVERS
(Part No. 67-5360)



ON GEAR BOX BRACKET
(Part No. 70-2560)

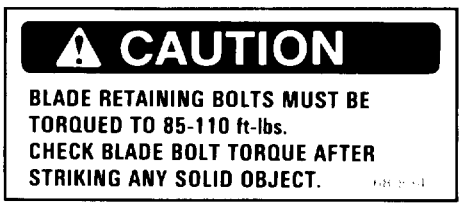

ON LEFT SIDE OF CUTTING UNIT
(Part No. 68-8340)

SPECIFICATIONS

CUTTING UNIT:

Width of Cut: 51-3/4 in. (1.315 m).

Height-of-Cut: Adjustable from 1" to 3-1/2" (25 to 89 mm) in 1/2" (13 mm) increments.

Blade Tip Speed: 15,764 ft/min. (80.08 m/sec.) @ 3300 engine RPM.

Cutter Blades: Three heat treated steel blades, each 3/16 in. (4.8 mm) thick and 18 in. (457 mm) long.

Castor Wheels: 8 in. (203 mm) dia. with greaseable roller bearings.

Unit Drive System: PTO driven gear box transmits power through a "AA" section belt to all blade spindles.

Optional Equipment:
Rear Weight Kit, Part No. 24-5780
High Lift Blades, Part No. 44-5480
Phenolic Castor Wheels, Part No. 27-1050
(Use with Spanner, Part No. 68-8980)
Weight Transfer Kit, Model 30702

LOOSE PARTS

Note: Use this chart as a checklist to assure all parts have been received. Without these parts, total set-up cannot be completed.

DESCRIPTION	QTY.	USE
Capscrews — 1/2-13 x 1-1/2" Carrier Frame	6 1	Mount to lift arms.
Castor Wheel Assembly Thrust Washer Lynch Pin	2 8 2	Install in frame. Install on castor fork shafts. Install on top hole of castor shafts.
Clevis Pin Hair Pin Cotter	4 4	Mount deck to suspension frame.
Mounting Bracket	1	Mount Weight Transfer Kit to traction unit.
Lock Pin Assembly	2	
Self-tapping Screw	2	
Spring Cover Assembly	1	
Clevis Pin	1	
Hair Pin Cotter	1	
Spring End — Top	1	
Extension Spring — Heavy	1	
Spring End — Lower	1	
Knee Link	1	
Capscrew, 3/8 — 16 x 2-1/4"	2	
Capscrew, 3/8 — 16 x 1.0"	2	
Shoulder Bolt	2	
Flatwasher	2	
Locknut, 3/8 — 16	4	
Operator's Manual Registration Card	1 1	
Cushion Shim	3	Leveling rubber cushions on cutting deck.

IMPORTANT: Engine Shield Kit — Model No. 30563 is required when mounting a 52" Cutting Unit, Model 30568, to a Model 30790 or 30798 Traction Unit. Model No. 30567 is required when mounting a 52" Cutting Unit, Model 30568, to a Model 30224 or 30794 Traction Unit. Order kit from your Authorized Toro Distributor.

SET-UP INSTRUCTIONS

INSTALL CARRIER FRAME

Note: Grease castor wheel shaft with No. 2 grease after installing and after initial operation of machine.

1. Remove Lynch Pins and two thrust washers from each castor wheel assembly. Leave two thrust washers on each shaft, insert shafts into frame, install thrust washers and Lynch pins (Fig. 1).

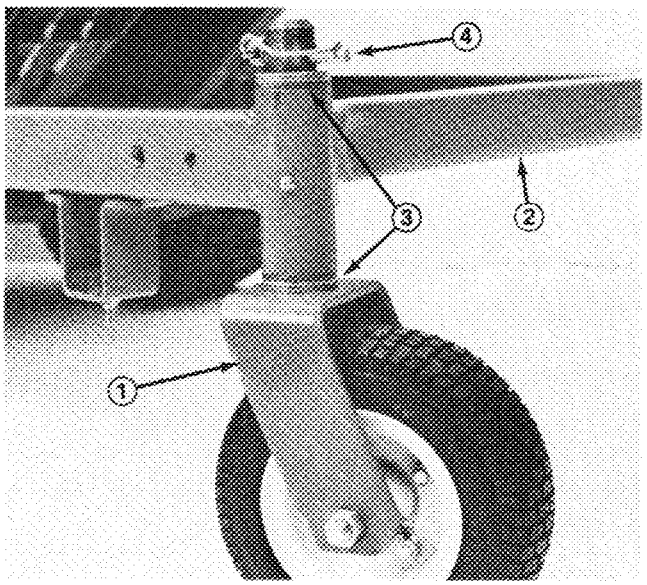

Figure 1

1. Castor wheel assembly
2. Frame
3. Thrust washers
4. Lynch pin

2. Slide carrier frame onto lift arms aligning mounting holes. Secure each side of carrier frame to lift arms with (3) 1/2 - 13 x 1-1/2" lg. capscrews. Torque capscrews to 70-80 ft-lb (Fig. 2).

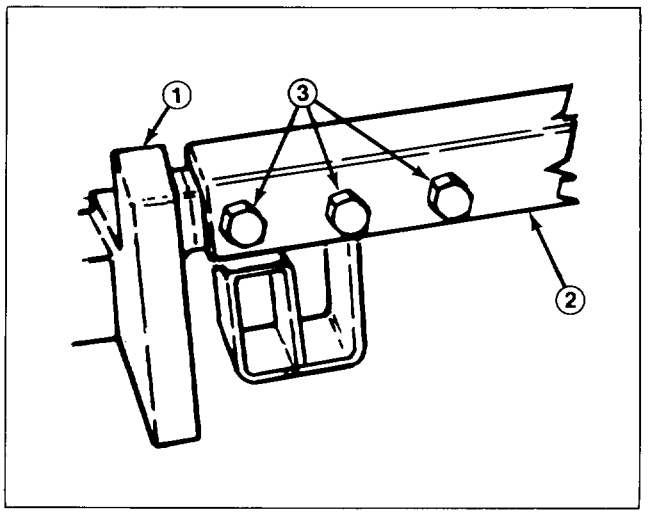

Figure 2

1. Lift arm
2. Carrier frame
3. Mounting capscrews

INSTALL CUTTING UNIT

1. Engage parking brake, be sure traction pedal is in neutral, PTO lever is in OFF position, start engine and raise frame.

2. Stop engine, remove clevis pins and hairpins from forward and rear height-of-cut brackets (Fig. 8), install cutting unit under carrier frame, align gearcase input shaft with PTO shaft and install shaft (Fig. 3).

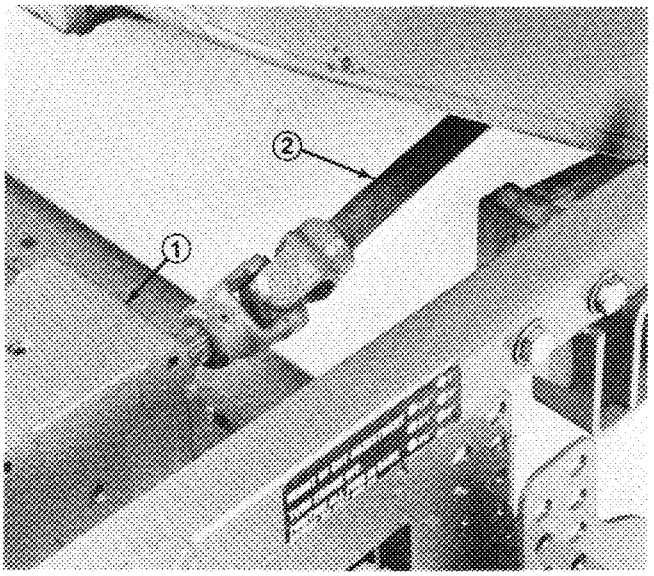

Figure 3

1. Gearcase
2. PTO shaft

3. Lower frame, align PTO shaft hole with gearcase input shaft hole and install roll pin (Fig. 4).

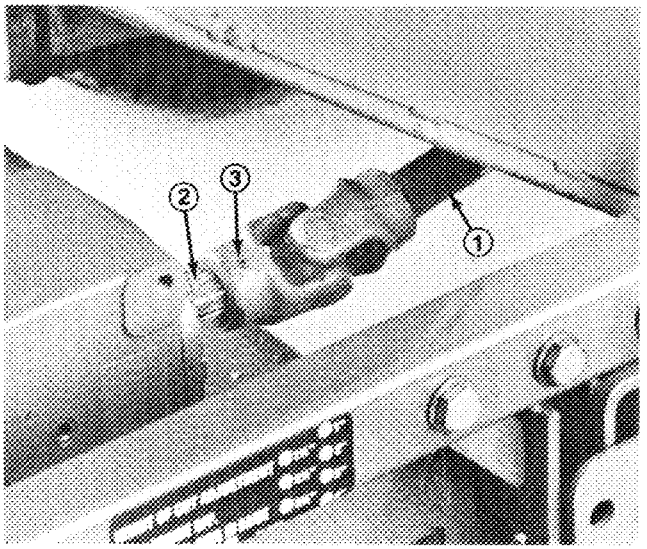

Figure 4

1. PTO shaft
2. Gearcase input shaft
3. Roll pin

Note: On Groundsmaster 220-D (Diesel) also tighten bolts and locknuts.

4. Install clevis pins through desired height-of-cut bracket holes and frame to secure cutting unit to frame (Fig. 5). Secure all four pins with hairpins.

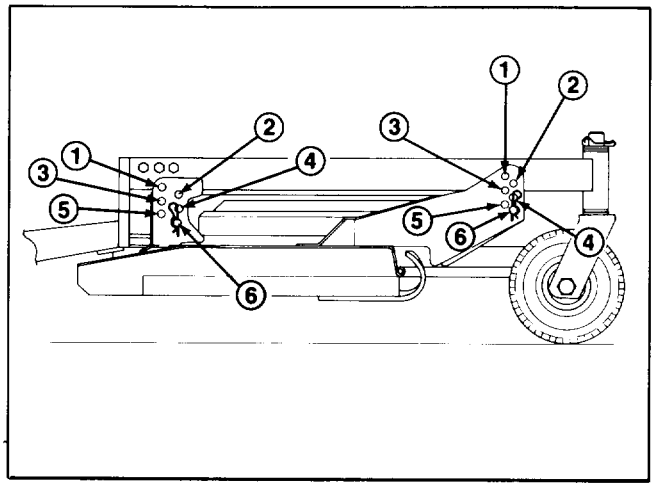

Figure 5

1. 1 in.
2. 1-1/2 in.
3. 2 in.
4. 2-1/2 in.
5. 3 in.
6. 3-1/2 in.

INSTALL WEIGHT TRANSFER KIT

Note: Fully raise the cutting deck, set the parking brake, rotate the ignition key to OFF and remove it from the ignition switch. Place blocks under the cutting deck to prevent it from falling during assembly.

Note: Mounting brackets must be installed in different configurations (Fig. 6) and, depending on the cutter deck, in different locations on 220-D and 224 models than on 217-D and 220 model machines (Fig. 7, 8).

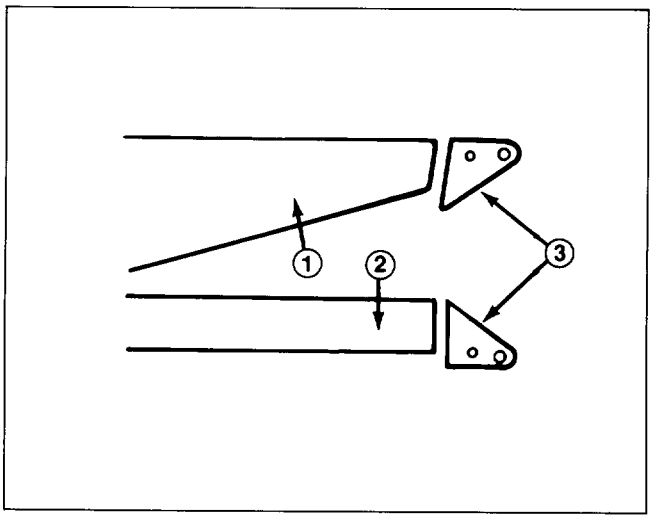

Figure 6

1. 220-D, 224 traction unit frame
2. 217-D, 220 traction unit frame
3. Mounting bracket

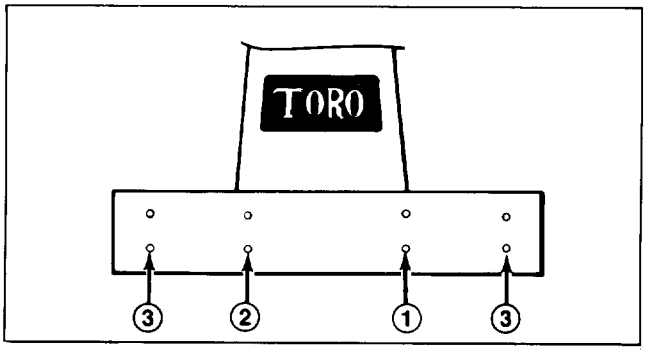

GM 220-D & GM 224

Figure 7

1. 52" decks 2. 52" deck w/bagger 3. 62" & 72" decks

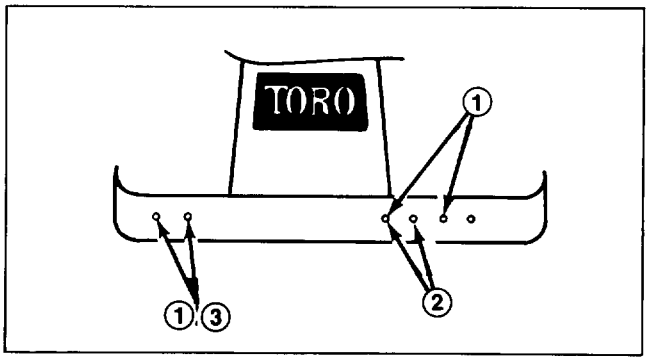

GM 217-D & GM 220

Figure 8

1. Adapter bar mounted holes (62", 72" C.U.)
2. 52" deck
3. 52" side discharge w/bagger

1. To install the mounting bracket:

   A. Groundsmaster 220-D and 224 — Insert (2) 3/8 x 1" capscrews through the slotted bracket holes. Thread the capscrews into captivated frame nuts and torque to 45-50 ft-lb (Fig. 9).

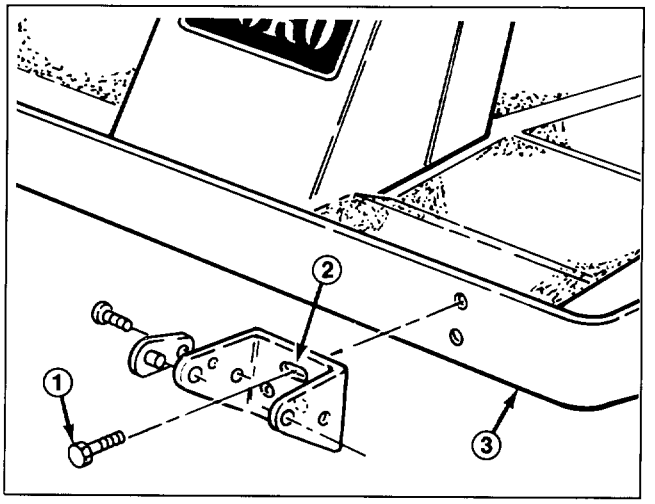

Figure 9

1. 3/8 x 1" capscrew (2) 2. Slotted hole 3. GM 220-D/224

SET-UP INSTRUCTIONS

B. Groundsmaster 217-D and 220 — Align the bracket with the frame mounting holes. Insert (2) 3/8 x 2-1/4" capscrews through the non-slotted bracket holes and frame mounting holes. Install locknuts and torque to 45-50 ft-lb (Fig. 10).

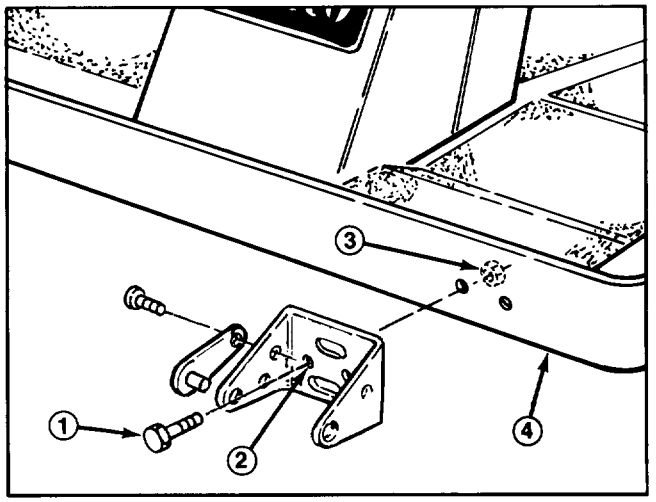

Figure 10

1. 3/8 x 2-1/4" capscrews (2)
2. Non-slotted hole
3. Locknut
4. GM 220/217-D

2. Thread the top extension spring coil into the top spring end holes and the bottom extension spring coil into the bottom spring end holes (Fig. 11).

3. Position the knee link mount hole to the rear and toward the outside of the cutter deck. Then, attach the knee link to the lower spring end with a shoulder bolt, flatwasher and locknut (Fig. 12, 13).

4. Insert a shoulder bolt through the knee link and install a flatwasher. Install the assembly into the deck bracket hole and secure to the deck with a locknut (Fig. 12, 13).

5. Align slotted holes in the spring cover (slot toward the bottom) with the mounting bracket holes. Insert lock pin assemblies into the bracket holes and secure each to the bracket with self-tapping screws (Fig. 11). Torque the screws to 20 ft-lb.

6. From the bottom, insert the spring and top spring end into the spring covers. Select a hole that matches the cutter deck height-of-cut hole setting; i.e., top cover hole matches highest height setting, bottom cover hole the lowest, etc. Align the top spring end hole with the selected spring cover holes and insert the clevis pin to secure the spring inside the cover (Fig. 11). Secure the clevis pin with the hair pin cotter (Fig. 11).

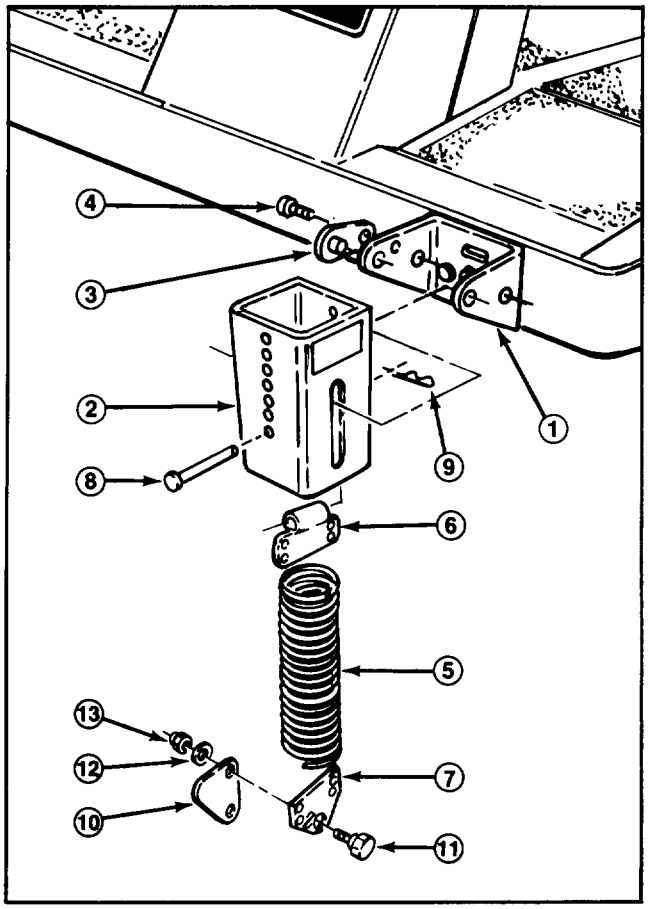

Figure 11

1. Mounting bracket
2. Spring cover
3. Lock pin assembly (2)
4. Self-tapping screw (2)
5. Extension spring
6. Top spring end
7. Bottom spring end
8. Clevis pin
9. Hair pin cotter
10. Knee link
11. Shoulder bolt (2)
12. Flatwasher (2)
13. Locknut (2)

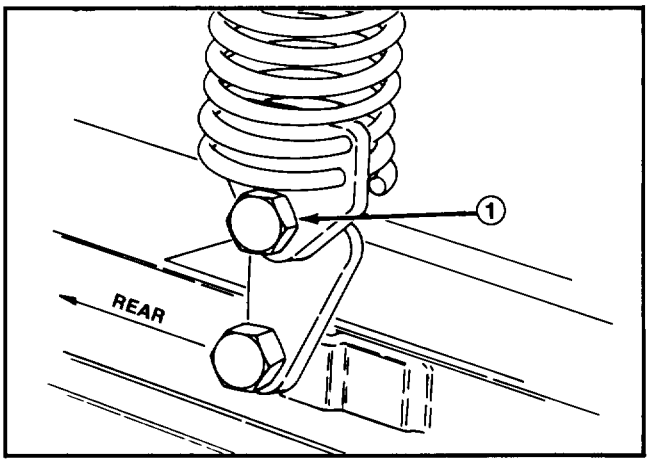

Figure 12

1. Top knee link hole toward rear

IMPORTANT: The top knee link hole must face toward the rear (Fig. 12). Otherwise, the extension spring could fold under the traction unit frame when the deck is fully raised.

SET-UP INSTRUCTIONS

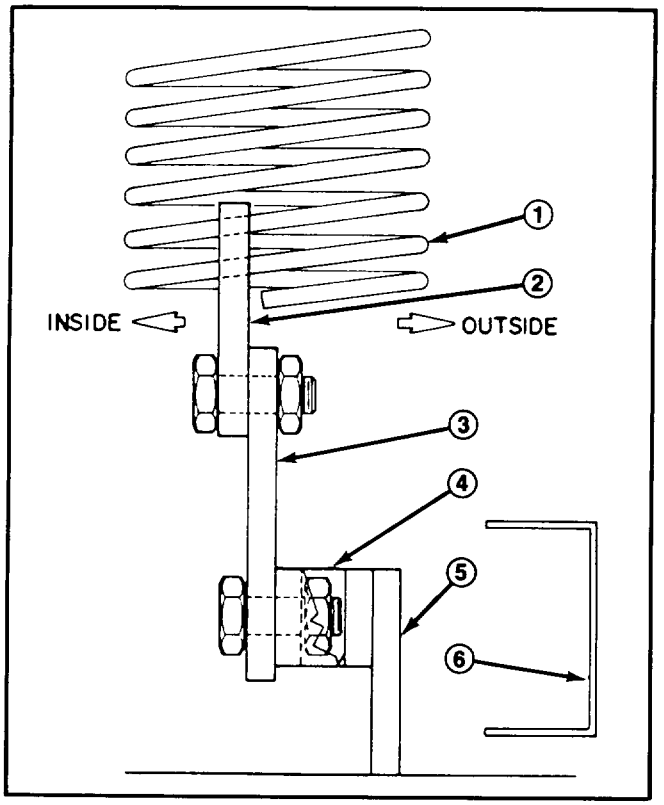

Figure 13

1. *Weight transfer spring*
2. *Spring end plate*
3. *Knee link bracket*
4. *Deck bracket*
5. *Deck frame*
6. *Flotation frame*

7. Remove the blocks from under the cutting unit. Make final counterbalance adjustments under actual cutting conditions; refer to Tension Spring Adjustment, page 10.

BEFORE OPERATING

ADJUSTING HEIGHT-OF-CUT

The height-of-cut is adjustable from 1 to 3-1/2 inches (25 to 89 mm) in 1/2 inch (13 mm) increments by relocating four clevis pins in different hole locations in brackets at each corner of the cutting unit (Fig. 14).

Note: All four pins should be in identical hole locations to prevent any operating and cutting difficulties.

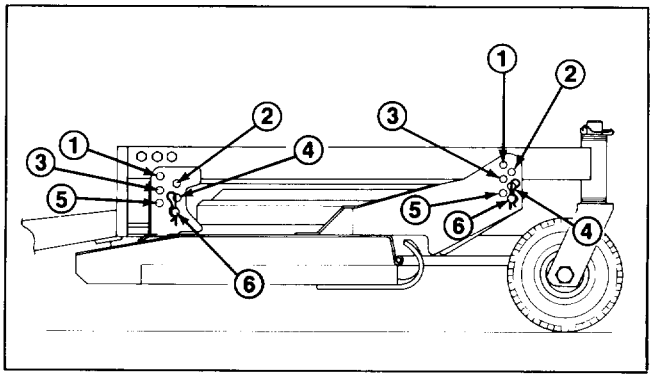

Figure 14

1. *1 in.*
2. *1-1/2 in.*
3. *2 in.*
4. *2-1/2 in.*
5. *3 in.*
6. *3-1/2 in.*

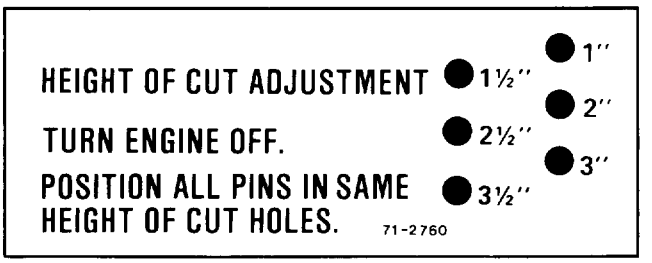

CHECK LUBRICANT IN GEAR BOX

The gear box is designed to operate on SAE 80-90 wt. gear lube. Although the gear box is shipped with lubricant from the factory, check the level before operating the cutting unit.

1. Position machine and cutting unit on a level surface. Lower cutting unit onto level surface.

2. Remove check plug from side of gear box (Fig. 15) and make sure lubricant is up to bottom of hole. If level of lubricant is low, remove fill plug on top of gear case and add enough lubricant to bring it up to bottom of hole in side.

BEFORE OPERATING

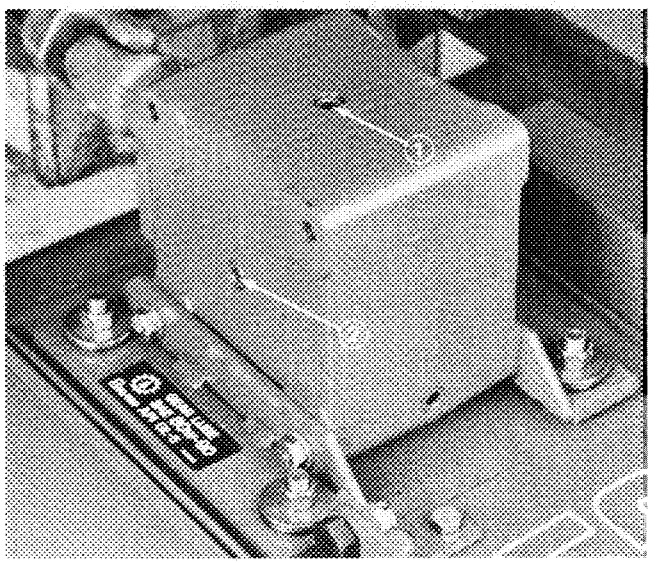

Figure 15

1. Filler plug 2. Check plug

OPERATING INSTRUCTIONS

TENSION SPRING ADJUSTMENT

For best performance, adjust spring tension so cutting unit bounce on uneven turf is minimal and it does not ride heavily over fairly flat terrain. If scalping occurs or the cut is uneven from side to side, there may be too much weight on the deck and weight may have to be transferred to the traction unit; i.e., increased spring tension.

By contrast, if too much weight is transferred to the traction unit, the deck will bounce excessively and the cut will be uneven. If the cutting unit does not perform properly, adjust as follows:

1. Stop the machine on a level surface, set the parking brake, fully raise the cutting unit, turn the ignition key to OFF and remove it from the ignition switch.

2. Remove the hair pin cotter from the clevis pin and remove the clevis pin. Align the top spring end hole with the new hole selected in the spring cover, insert the clevis pin and secure it with the hair pin cotter.

3. Resume operation. If further adjustments are necessary, refer to steps 1, 2.

CAUTION

Counterbalance spring is in tension when deck is in lowered position. Always raise deck before adjusting or removing spring.

LUBRICATION MAINTENANCE

GREASE BEARINGS, BUSHINGS AND GEAR BOX

The cutting unit must be lubricated regularly. If machine is operated under normal conditions, lubricate castor bearings and bushings with No. 2 general purpose lithium grease or molybdenum base grease, after every 8 hours of operation or daily, whichever comes first. All other bearings, bushings and the gear box must be lubricated after every 50 hours of operation.

1. The cutting unit has bearings and bushings that must be lubricated, and these lubrication points are: caster spindle bushings (Fig. 16), castor wheel bearings (Fig. 16) and blade spindle bearings (Fig. 17).

2. Lower cutting unit so castor wheels are on a level surface. Be sure all height-of-cut pins are in the same hole locations. Remove check plug (Fig. 18) from side of gear box and check level of lubricant. If level of lubricant is low, remove fill plug on top of gear box and add SAE 80-90 wt. gear lube until level is up to bottom of check hole.

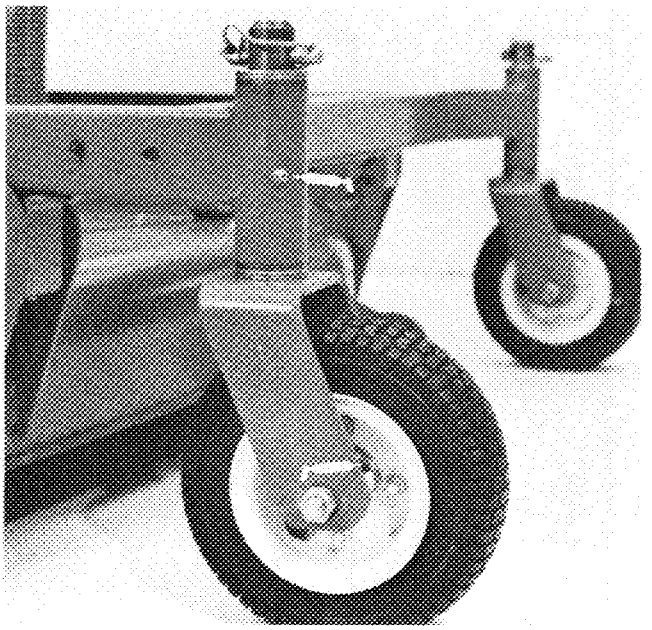

Figure 16

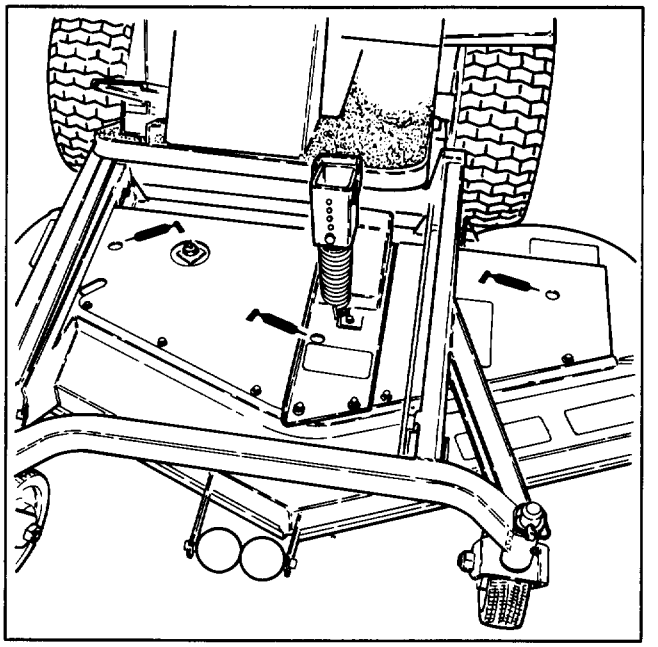

Figure 17

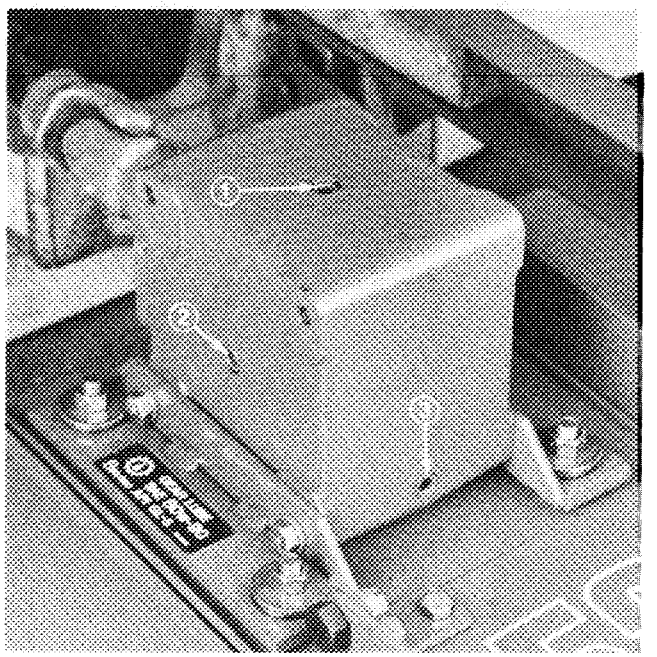

Figure 18

1. Filler plug
2. Check plug
3. Drain plug

CUTTING UNIT MAINTENANCE TROUBLESHOOTING

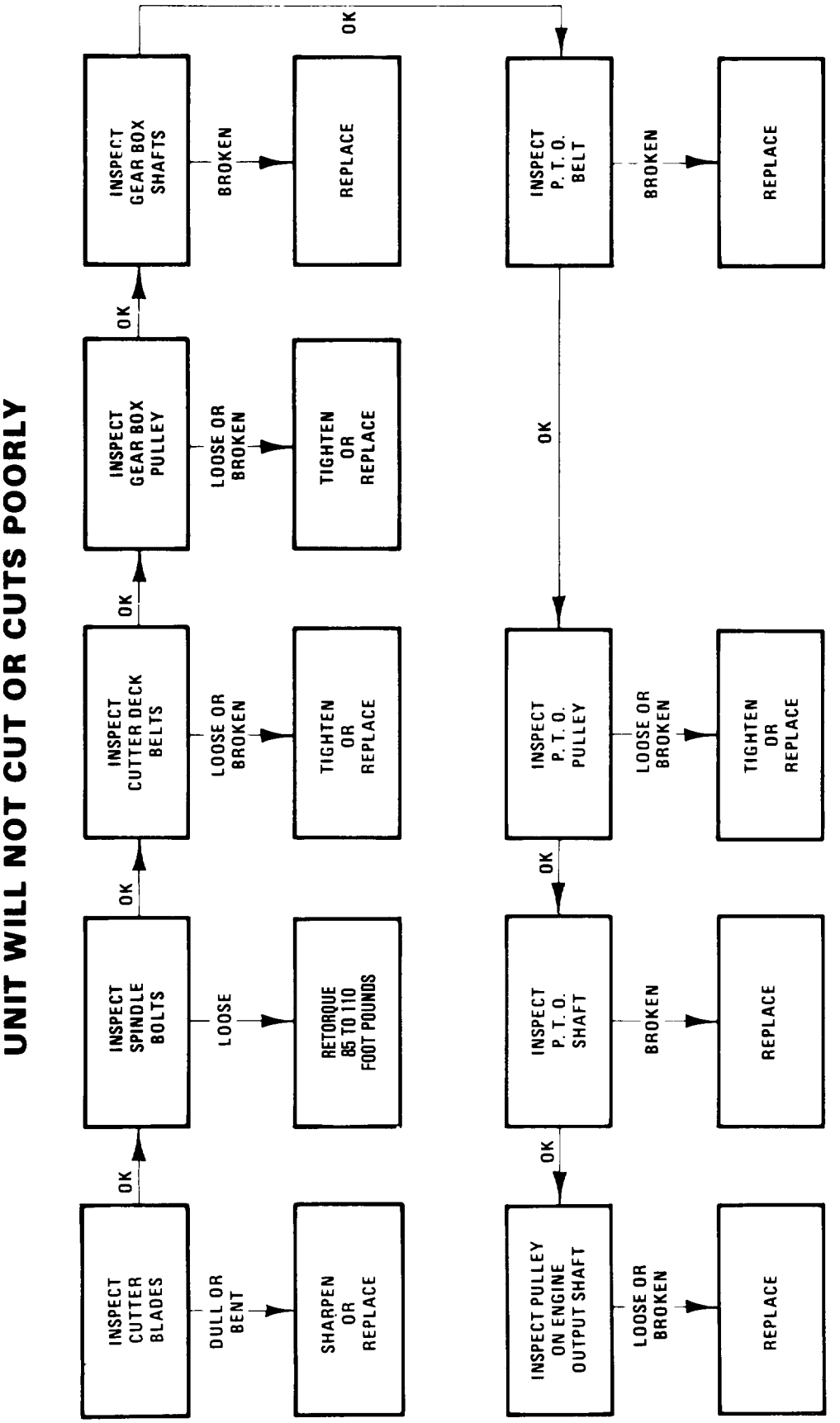

CUTTING UNIT MAINTENANCE

SEPARATING CUTTING UNIT FROM TRACTION UNIT

1. Position machine on level surface. Raise cutting unit, engage parking brake, be sure traction pedal is in neutral position and PTO lever is in OFF position. Shut engine off and remove key from switch.

CAUTION

Counterbalance springs are in tension when deck is in lowered position. Always raise deck before adjusting or removing springs.

2. Disconnect counterbalance from traction unit. Remove lock pin(s) from the bracket and separate spring tension assembly from the bracket. Lay the assembly down on the deck and loosely secure the lock pin(s) to the bracket to prevent their loss.

3. Lower cutting unit, remove pins from height-of-cut brackets (4).

4. Drive roll pin out of yoke and input shaft of gear box (Fig 19). Slide yoke off the input shaft. If traction unit will be used without the cutting unit, remove the PTO shaft from the traction unit; refer to PTO Shaft Removal, page 13.

Note: On Groundsmaster 220-D (Diesel) and 224, bolts and locknuts must also be loosened or removed.

5. Start engine, raise cutting unit frame.

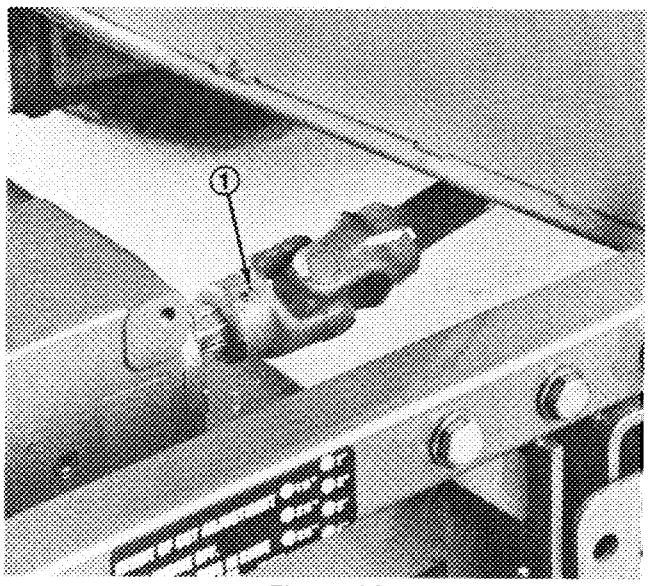

Figure 19

1. Roll pin

DANGER

Do not start the engine and engage the PTO lever when PTO shaft is not connected to gear box on cutting unit. If engine is started and PTO shaft is allowed to rotate, serious injury could result.

6. Stop engine and slide cutting unit away from traction unit and frame.

PTO SHAFT REMOVAL

1. Jack left wheel off shop floor. Support the axle with a jackstand to prevent machine from falling accidentally.

2. Remove five wheel nuts and slide left wheel off axle to expose access hole inside of chassis (Fig. 20).

3. Push PTO lever forward until pulley and brake disengage. Align hole in PTO shaft with hole in chassis (Fig. 20).

4. Through access hole in chassis, drive roll pin out of PTO shaft and output shaft with pin punch and ball peen hammer (Fig. 20).

Note: On Groundsmaster 220-D (Diesel) and 224, bolts and locknuts must also be loosened or removed.

5. Install the left wheel with five wheel nuts. Tighten nuts to 60-80 ft-lb (81-109 N·m).

6. Lower machine and remove jack.

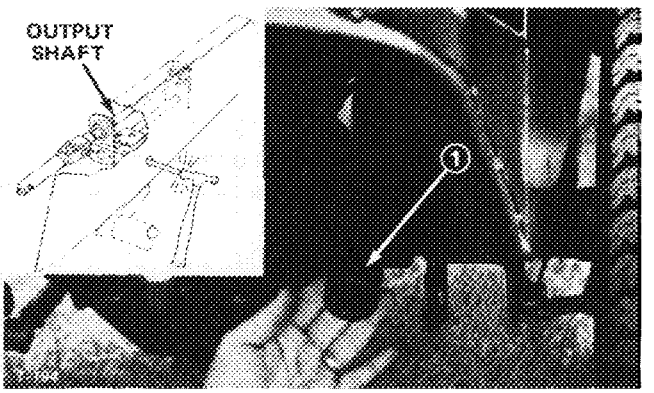

Figure 20

1. PTO shaft

SERVICING BUSHINGS IN CASTOR ARMS

The castor arms have bushings pressed into the top and bottom portion of the tube. After many hours

operation, the bushings will wear. To check the bushings, move castor fork back and forth and from side-to-side. If castor spindle is loose inside the bushings, bushings are worn and must be replaced.

1. Raise cutting unit and block it so it cannot fall accidentally.

2. Remove lynch pin and thrust washers from top of castor spindle.

3. Pull castor spindle out of mounting tube. Allow thrust washers to remain on bottom of spindle.

4. Insert pin punch into top or bottom of mounting tube and drive bushing out of tube (Fig. 21). Also drive other bushing out of tube. Clean inside of tubes to remove dirt.

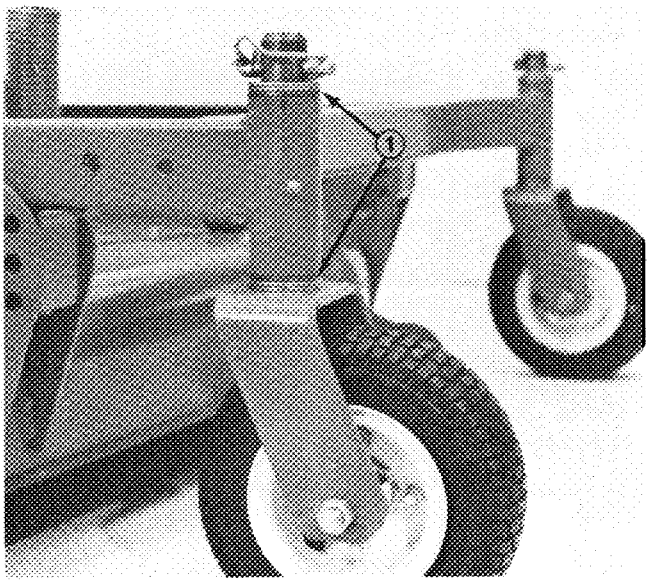

Figure 21
1. Bushings

5. Apply grease to inside and outside of new bushings. Using a hammer and flat plate, drive bushings into mounting tube.

6. Inspect castor spindle for wear and replace it, if damaged.

7. Push castor spindle through bushings and mounting tube. Slide spacers onto spindle. Install lynch pin through castor spindle to retain all parts in place.

IMPORTANT: When bushings are installed, the inside diameter may collapse slightly, and this may not allow castor spindle to be installed. If castor spindle does not slide through new bushings and mounting tube, ream both bushings to inside diameter of 1.126 inches (28.6 mm).

SERVICING CASTOR WHEEL AND BEARING

The castor wheel rotates on a high-quality roller bearing and is supported by a spanner bushing. Even after many hours of use, provided that the bearing was kept well-lubricated, bearing wear will be minimal. However, failure to keep bearing lubricated will cause rapid wear. A wobbly castor wheel usually indicates a worn bearing or bushing.

1. Remove locknut from axle holding castor wheel assembly between castor fork (Fig. 22). Grasp castor wheel and slide axle out of fork.

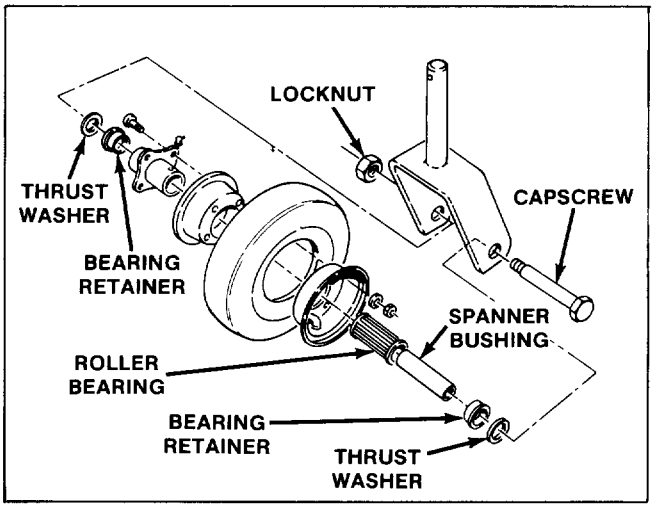

Figure 22

Note: Account for the two thrust washers (Fig. 22).

2. Tip wheel to the side and allow roller bearing and spanner bushing to fall out (Fig. 22).

3. Inspect bearing, spanner bushing and wheel for wear. Replace worn or damaged parts.

4. To reassemble parts, slide spanner bushing through roller bearing.

5. Slide bearing hub and thrust washer onto spanner bushing, and mount castor wheel assembly between the fork. Insert capscrew and locknut. Tighten axle and locknut until spanner bushing and washers bottom against the inside of castor fork.

6. Pump grease through grease fitting on axle (Fig. 22) until bearing is greased thoroughly.

CHECKING FOR BENT BLADE

1. Raise cutting unit, engage parking brake, be sure traction pedal is in neutral, PTO lever is in OFF position, stop engine and remove key from switch.

CUTTING UNIT MAINTENANCE

Block cutting unit to prevent it from falling accidentally.

2. Rotate blade until the ends face forward and backward (Fig. 23). Measure from inside of cutting unit to cutting edge at front of blade (Fig. 23), and remember this dimension.

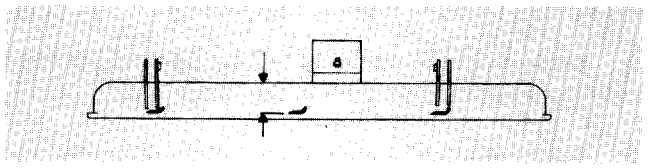

Figure 23

3. Rotate opposite end of blade forward. Measure between the cutting unit and cutting edge of blade at the same position as in step 2. The difference between dimensions obtained in steps 2 and 3 must not exceed 1/8 inch (3 mm). If dimension exceeds 1/8 inch (3 mm), replace the blade because it is bent: refer to Removing Cutter Blade, page 15.

REMOVING CUTTER BLADE

The blade must be replaced if a solid object is hit, the blade is out-of-balance or if the blade is bent. Always use genuine TORO replacement blades to be sure of safety and optimum performance. Never use replacement blades made by other manufacturers because they could be dangerous.

WARNING

Do not try to straighten a blade that is bent, and never weld a broken or cracked blade. Always use a new blade to assure safety.

1. Raise cutting unit to its highest position, engage parking brake, be sure traction pedal is in neutral, PTO lever is in OFF position and shut engine off. Block cutting unit to prevent it from falling accidentally.

2. Grasp end of blade using a rag or thickly padded glove. Remove bladebolt, lockwasher, anti-scalp cup and blade from spindle shaft (Fig. 24).

3. In sequence, install blade — sail facing toward cutting unit — and anti-scalp cup. Secure parts in place with bladebolt and lockwasher. Tighten bladebolt to 85-110 ft-lb (115-149 N·m).

CHECKING SAIL AND SHARPENING CUTTER BLADE

Two areas must be considered when checking and

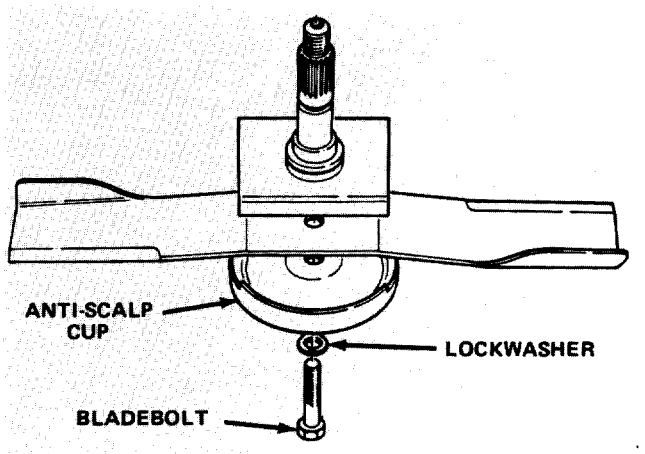

Figure 24

servicing the cutter blade: one area is the sail, the other is the cutting edge. Both cutting edges and the sail, which is the turned up portion opposite the cutting edge, contribute to a good quality-of-cut. The sail is important because it pulls grass up straight, thereby producing an even cut. However, the sail will gradually wear down during operation, a normal condition. As the sail wears down, the quality-of-cut will degrade somewhat, even though the cutting edges are sharp. The cutting edges of the blade must be sharp so the grass is cut rather than torn. A dull cutting edge is evident when tips of the grass appear brown and shredded. Sharpen the cutting edges to correct this condition.

1. Raise cutting unit to its highest position, engage parking brake, be sure traction pedal is in neutral and PTO lever is in OFF position. Stop engine and remove key from switch. Block cutting unit to prevent it from falling accidentally.

2. Examine cutting ends of the blade carefully, especially where the flat and curved parts of the blade meet (Fig. 25-1). Since sand and abrasive material can wear away the metal that connects the flat and curved parts of the blade, check the blade before using the mower. If wear is noticed (Fig. 25-2),replace the blade.

DANGER

If blade is allowed to wear, a slot will form between the sail and flat part of the blade. (Fig. 25-3). Eventually, a piece of the blade may break off and be thrown from under the housing, possibly resulting in serious injury to yourself or bystander.

CUTTING UNIT MAINTENANCE

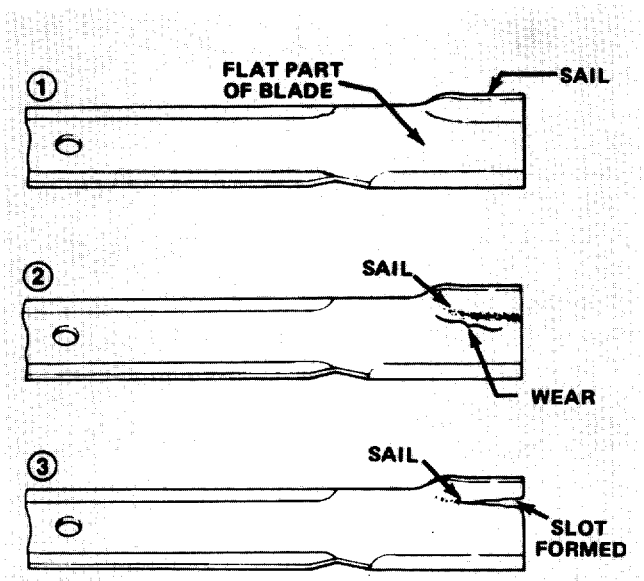

Figure 25

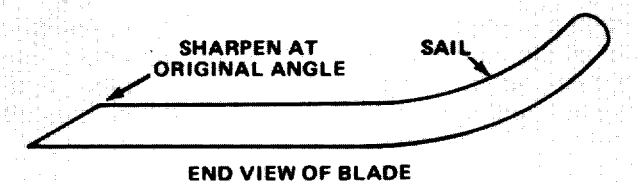

Figure 26

3. Inspect cutting edges of all blades. Sharpen the cutting edges if they are dull or nicked. Sharpen only the top side of the cutting edge and maintain the original cutting angle to make sure of sharpness (Fig. 26). The blade will remain balanced if same amount of metal is removed from both cutting edges.

Note: Remove the blades and sharpen them on a grinder: refer to Removing Cutter Blade, steps 1 and 2, page 15. After sharpening the cutting edges, reinstall blade and anti-scalp cup with bladebolt and lockwasher. Blade sails must be on top of blade. Tighten bladebolt to 85-110 ft-lb (115-149 N·m).

4. Remove blocking from cutting unit and lower it to the ground.

CORRECTING CUTTING UNIT MISMATCH

If one cutter blade cuts lower than the others, correct as follows:

1. Lower cutting unit onto level surface, engage parking brake, be sure traction pedal is in neutral, PTO lever is in OFF position and shut engine off.

2. Check to make sure front height-of-cut pins are resting properly on frame cushions (Fig. 29). If pins are not resting properly, place a shim or shims under cushion to raise it for proper alignment.

3. Raise height-of-cut to 3-1/2 in. (89 mm) position; refer to Adjusting Height-Of-Cut, page 9.

4. Rotate blades so tips line up with one another. Tips of the adjacent blades must be within 1/8 in. (3 mm) of each other. If tips are not within 1/8 in. (3 mm) of each other, proceed to step 9 and add shims between spindle housing and bottom of cutting unit.

5. Position all three blades in the "A" position (Fig. 27) and measure from level surface to the bottom of the tip end of each blade (Fig. 28).

6. Note measurement attained at "A", rotate blades to "B" position (Fig. 27), measure distance of all blades to level surface and note dimensions (Fig. 28).

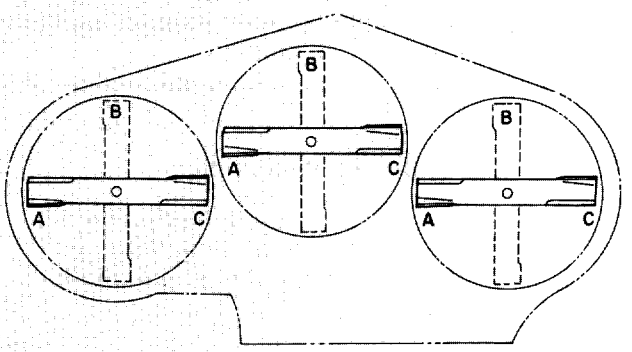

Figure 27

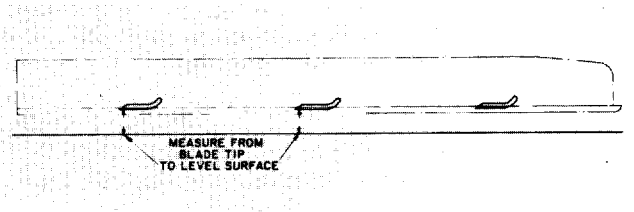

Figure 28

7. Rotate blades to "C" position, measure and note distance measured (Fig. 27, 28).

8. Compare measurements at various positions. All dimensions must be equal within 1/4 in. (6 mm) from one another. The difference between dimensions must not exceed 1/4 in. (6 mm). If difference exceeds 1/4 in. (6 mm), add shims between spindle housing and bottom of cutting unit, step 9, and/or move thrust washers on castor shafts, step 10.

9. Remove capscrews, flatwashers, lockwashers and nuts from outer spindle in the area where shims must be added. To raise or lower the blade, add a shim, Part No. 3256-24, between spindle housing and bottom of cutting unit. Continue checking alignment of blades and adding shims until tips of blades are within the required dimension.

10. Equalize side to side measurements as follows:

A. Cutting units usually operated at 1 to 2 in. (25 to 51 mm) height-of-cut should have the low side of the cutting unit raised. Remove the lynch pin securing castor wheel on low end (Fig. 29) and remove castor assembly.

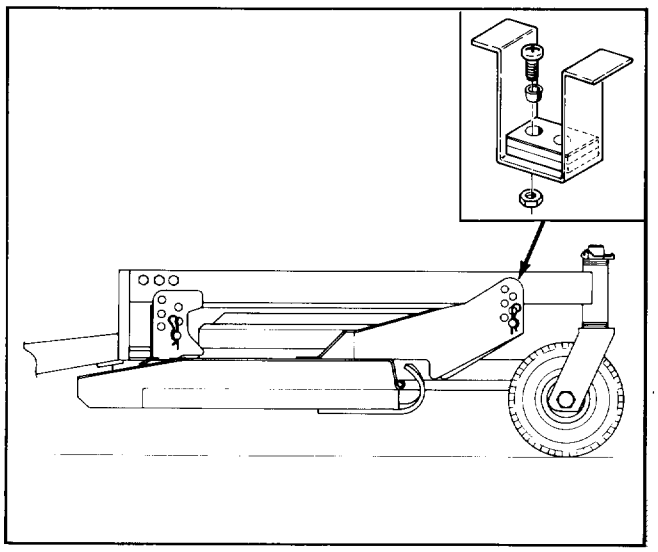

Figure 29

B. Transfer one thrust washer from top side of castor shaft to lower side, install castor assembly and compare blade height of all blades; refer to steps 3 through 6. Continue adding thrust washers if height still does not meet requirements.

C. If cutting unit is operated at 2 to 3-1/2 in. (51 to 89 mm) height-of-cut, lower the high side of cutting unit. Remove lynch pin of castor at high end of unit and remove castor assembly (Fig. 29).

D. Transfer one thrust washer from lower side of castor shaft to top side, install assembly and compare blade height of all blades; refer to steps 3 through 6. Repeat procedure if height still does not meet requirements.

E. If height is within specified dimension, install lynch pin, set height-of-cut to proper height and resume operation.

ADJUSTING IDLER PULLEY

The idler pulley applies force against the belt so power can be transmitted to the blade pulleys. If the idler is not tensioned against the belt with sufficient force, maximum power will not be transmitted to the pulleys. Initial tension on a new belt requires 25 to 30 ft-lb (34 to 40.7 N·m) of torque on the large nut, which applies force against the belt. As the belt wears and loosens, 20 to 25 ft-lb (27.2 to 34 N·m) of torque on the nut is required. If the idler is not adjusted to these specifications, adjustment is necessary.

1. Lower cutting unit, engage parking brake, be sure traction pedal is in neutral position and PTO lever is in OFF position. Stop engine and remove key from switch.

2. Unhook latches securing right hand cover to top of cutting unit. Remove cover from cutting unit.

3. Loosen two nuts securing idler plate in place (Fig. 30). Using a socket and torque wrench, tighten the idler adjusting nut (Fig. 30) until proper torque value is achieved.

4. Hold the torque against the belt and tighten the two nuts so idler plate is held securely in place (Fig. 30). Release the idler adjusting nut. Install cover and secure latches.

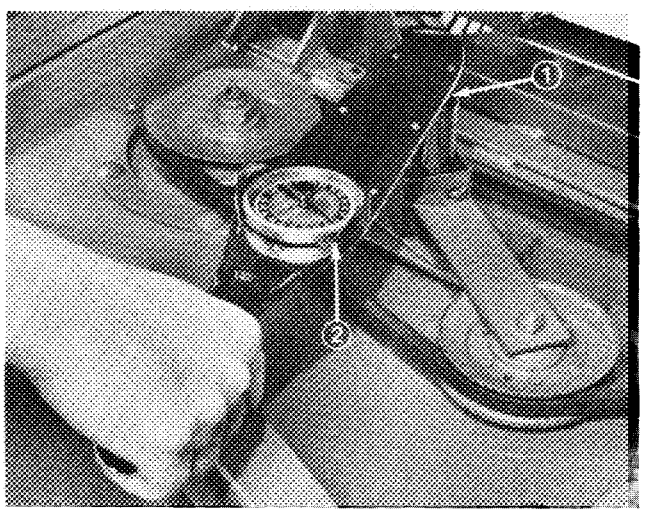

Figure 30

1. Nut 2. Torque wrench

CUTTING UNIT MAINTENANCE

REPLACING DRIVE BELT

The blade drive belt, tensioned by the adjustable idler, is very durable. However, after many hours of use, the belt will show signs of wear. Signs of a worn belt are: squealing when belt is rotating, blades slipping when cutting grass, frayed edges, burn marks and cracks. Replace the belt if any of these conditions are evident.

1. Lower cutting unit to the floor, engage parking brake, be sure traction pedal is in neutral and PTO lever is in OFF position. Stop the engine and remove key from switch.

2. Unhook latches securing left and right covers to top of cutting unit (Fig. 31).

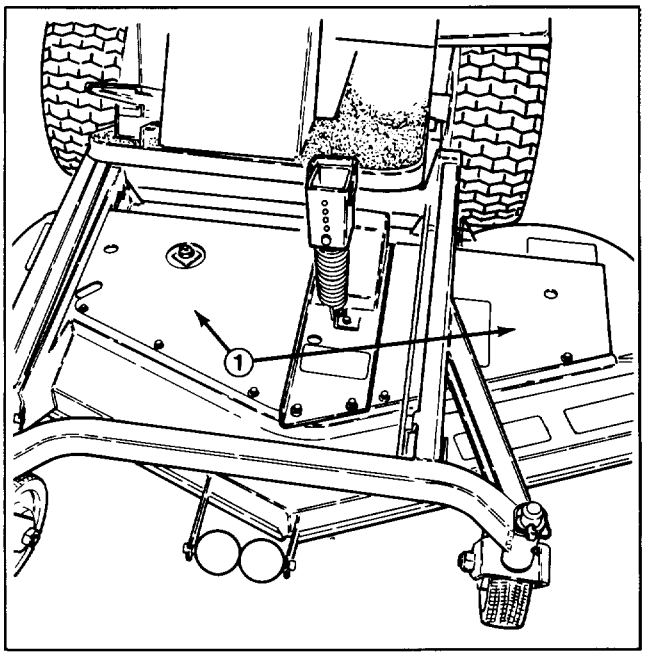

Figure 31

1. Covers

3. Loosen two nuts securing idler plate in place (Fig. 32) and remove old belt from pulleys.

4. To install new belt, the gear box base must be removed. To do this, remove four nuts holding gear box base to cutting unit.

5. Install new belt around gear box pulley, spindle pulleys and idler pulley (Fig. 33).

6. Install gear box base with nuts.

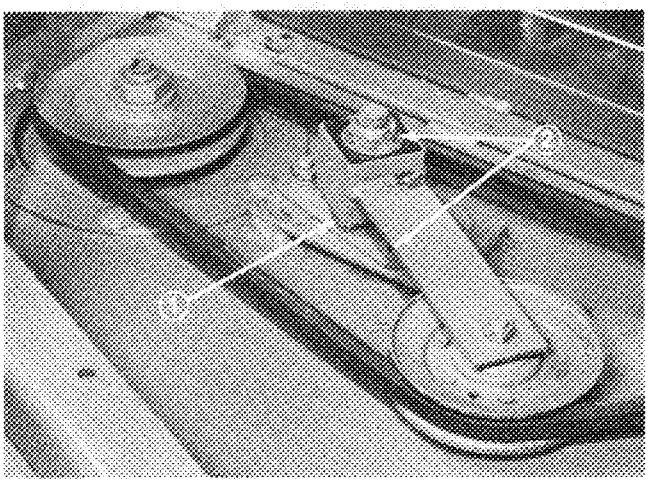

Figure 32

1. Idler plate 2. Nut, lockwasher and flatwasher

7. Using a torque wrench, adjust tension of idler pulley against the belt: refer to Adjusting Idler Pulley, page 17.

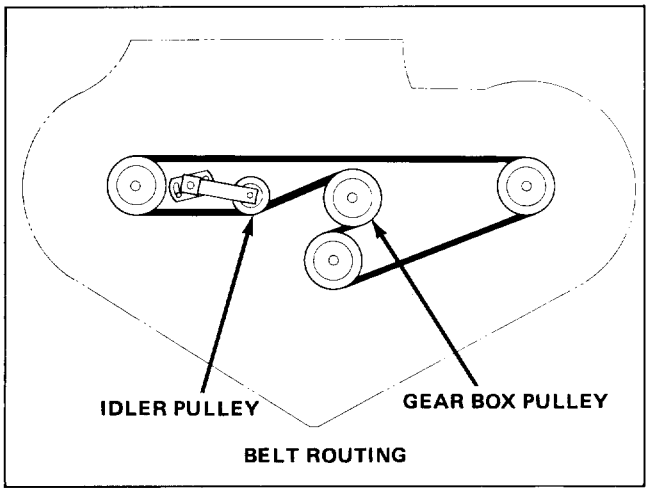

Figure 33

8. Reinstall covers and secure latches (Fig. 31).

IDENTIFICATION AND ORDERING

MODEL AND SERIAL NUMBERS

The cutting unit has two identification numbers: a model number and a serial number. These numbers are stamped into a plate. The cutting unit identification plate is located just behind the right castor wheel (Fig. 34). In any correspondence concerning the cutting unit, supply the model and serial numbers to assure correct information and replacement parts are obtained.

To order replacement parts from an authorized TORO Distributor, supply the following information:

1. Model and serial numbers of the cutting unit.

2. Part number, description and quantity of parts desired.

Note: Do not order by reference number if a parts catalog is being used; use the part number.

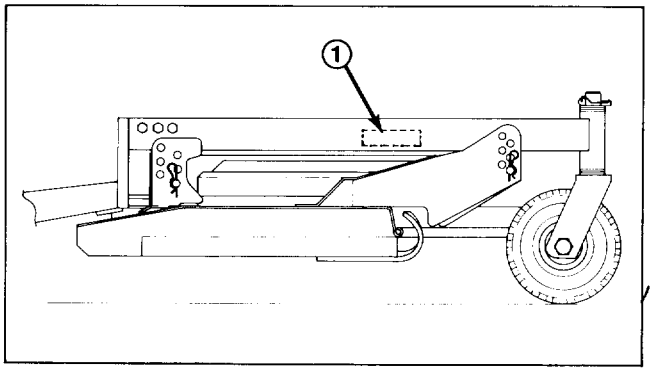

Figure 34
1. Model and serial number

SERVICE INTERVAL CHART

Date									
Hour Meter Reading									
Service Interval ↓		Daily	10	50	100	150	200	250	300
Check Blades	Daily								
Lubricate Castor Arm Bushings	Daily								
Lubricate Castor Wheel Bearings	Daily								
Check Cooling Fins	Daily								
Lubricate Grease Fittings	50								
Clean Cutting Unit	50								
Check Blade Drive Belts	50								
Check Gear Box Oil	50								
Change Gear Box Oil	250								

Date									
Hour Meter Reading									
Service Interval ↓		350	400	450	500	550	600	650	700
Check Blades	Daily								
Lubricate Castor Arm Bushings	Daily								
Lubricate Castor Wheel Bearings	Daily								
Lubricate Grease Fittings	50								
Clean Cutting Unit	50								
Check Blade Drive Belts	50								
Check Gear Box Oil	50								
Change Gear Box Oil	250								

SERVICE SPECIFICATIONS:

Cutting Unit Gear Box Oil — 80-90 wt. Gear Lube

The Toro Promise

A ONE YEAR LIMITED WARRANTY

The costs of parts and labor are included, but the customer pays the transportation costs on walk rotary mowers with cutting unit widths of less than 25".

Commercial Products . . . . . 1 Year

The costs of parts and labor are included, but the customer pays the transportation costs on walk rotary mowers, trimmers and blowers.

If you feel your TORO product is defective and wish to rely on The Toro Promise, the following procedure is recommended:

1. Contact your Authorized TORO Distributor or Commercial Dealer (the Yellow Pages of your telephone directory is a good reference source).
2. The TORO Distributor or Commercial Dealer will advise you on the arrangements that can be made to inspect and repair your product.
3. The TORO Distributor or Commercial Dealer will inspect the product and advise you whether the product is defective and, if so, make all repairs necessary to correct the defect without an extra charge to you.

If for any reason you are dissatisfied with the distributor's analysis of the defect or the service performed, you may contact us.

Write:

TORO Commercial Products Service Department
8111 Lyndale Avenue South
Minneapolis, Minnesota 55420

The above remedy of product defects through repair by an Authorized TORO Distributor or Commercial Dealer is the purchaser's sole remedy for any defect.

THERE IS NO OTHER EXPRESS WARRANTY. ALL IMPLIED WARRANTIES OF MERCHANTABILITY AND FITNESS FOR USE ARE LIMITED TO THE DURATION OF THE EXPRESS WARRANTY.

Some states do not allow limitations on how long an implied warranty lasts, so the above limitation may not apply to you.

This Warranty applies only to parts or components which are defective and does not cover repairs necessary due to normal wear, misuse, accidents, or lack of proper maintenance. Regular, routine maintenance of the unit to keep it in proper condition is the responsibility of the owner.

All warranty repairs reimbursable under the Toro Promise must be performed by an Authorized TORO Commercial Dealer or Distributor using Toro approved replacement parts.

Repairs or attempted repairs by anyone other than an Authorized TORO Distributor or Commercial Dealer are not reimbursable under the Toro Promise. In addition, these unauthorized repair attempts may result in additional malfunctions, the correction of which is not covered by warranty.

THE TORO COMPANY IS NOT LIABLE FOR INDIRECT, INCIDENTAL OR CONSEQUENTIAL DAMAGES IN CONNECTION WITH THE USE OF THE PRODUCT INCLUDING ANY COST OR EXPENSE OF PROVIDING SUBSTITUTE EQUIPMENT OR SERVICE DURING PERIODS OF MALFUNCTION OR NON-USE.

Some states do not allow the exclusion or limitation of incidental or consequential damages, so the above limitation or exclusion may not apply to you.

This warranty gives you specific legal rights, and you may also have other rights which vary from state to state.

COUNTRIES OTHER THAN THE UNITED STATES OR CANADA

Customers who have purchased TORO products exported from the United States or Canada should contact their TORO Distributor (Dealer) to obtain guarantee policies for your country, province or state. If for any reason you are dissatisfied with your Distributor's service or have difficulty obtaining guarantee information, contact the TORO importer. If all other remedies fail, you may contact us at The Toro Company.

Compliance with Radio Interference Regulations Certified.
Certifie Conforme au Reglement sur le Brouillage Radioelectrique.

Litho in U.S.A.