Form No. 3418-363 Rev C

TORO®

Count on it.

Parts Catalog

21in Recycler®/Rear Bagging

Lawn Mower

Model No. 21320—Serial No. 400000000 and Up

Register at www.Toro.com.
Original Instructions (EN)

3418-363 C

Ordering Replacement Parts

To order replacement parts, please supply the part number, the quantity, and the description of each part desired.

Understanding Reference Numbers

Each identified part in an illustration has a reference number. The reference number for a part also appears in the parts list, along with other information about the part.

This catalog uses two special reference number formats, one to indicate parts in a service assembly and another to indicate the quantity of a given part in an illustration.

Service Assembly Reference Numbers

Parts in service assemblies have reference numbers in the form a:b. The a represents the reference number of the entire service assembly and the b represents a sequential number unique to each part within the service assembly.

For example, a wheel assembly might be identified by reference number 6, the tire by 6:1, the valve by 6:2, and the wheel by 6:3. When you order the assembly identified by reference number 6, you receive all parts identified by reference numbers 6:1,6:2, and 6:3. However, you may also order any part individually. Reference numbers of this type appear in illustration and in parts lists.

Reference Numbers Indicating Quantity

In an illustration, if a reference number indicates more than one part, the reference number has the form nX y. The n represents the quantity of the part, the X is the multiplication symbol, and the y represents the reference number.

For example, in an illustration, the reference number 2X 37 means that two of the parts identified by reference number 37 are indicated.

Contents

Housing Assembly 4
Bag Assembly 6
Engine and Blade Assembly 8
Front Wheel Assembly 10
Rear Wheel Assembly 12
Handle Assembly 14
Attachments and Accessories 16

© 2019—The Toro® Company
8111 Lyndale Avenue South
Bloomington, MN 55420

Contact us at www.Toro.com.
Printed in the USA.
All Rights Reserved

Housing Assembly

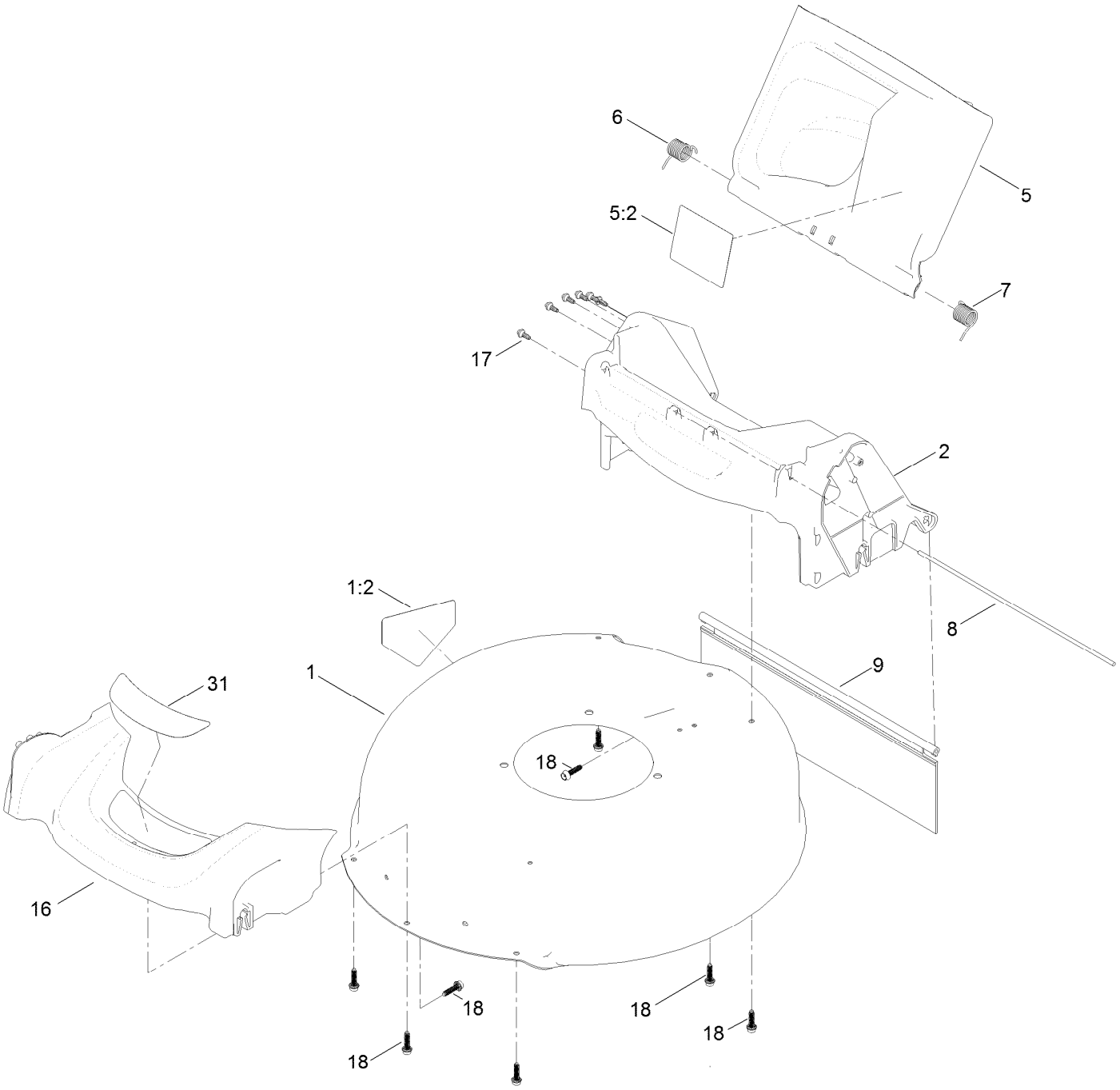

Housing Assembly (continued)

Ref.	Part Number	Qty.	Description
1	136-5906	1	Housing ASM
1:2	94-8072	1	Decal-Danger
2	130-6657	1	Chute ASM
5	130-2368	1	Rear Deflector ASM
5:2	117-4143	1	Decal-Warning
6	127-6807	1	Spring-Torsion
7	127-6808	1	Spring-Torsion
8	127-0698	1	Rod-Door
9	127-0724	1	Shield-Trailing
16	127-0677	1	Bumper
17	130-2355	6	Stud
18	130-6658	9	Screw-Flange, Plastic
31	136-5905	1	Decal-Deck

Bag Assembly

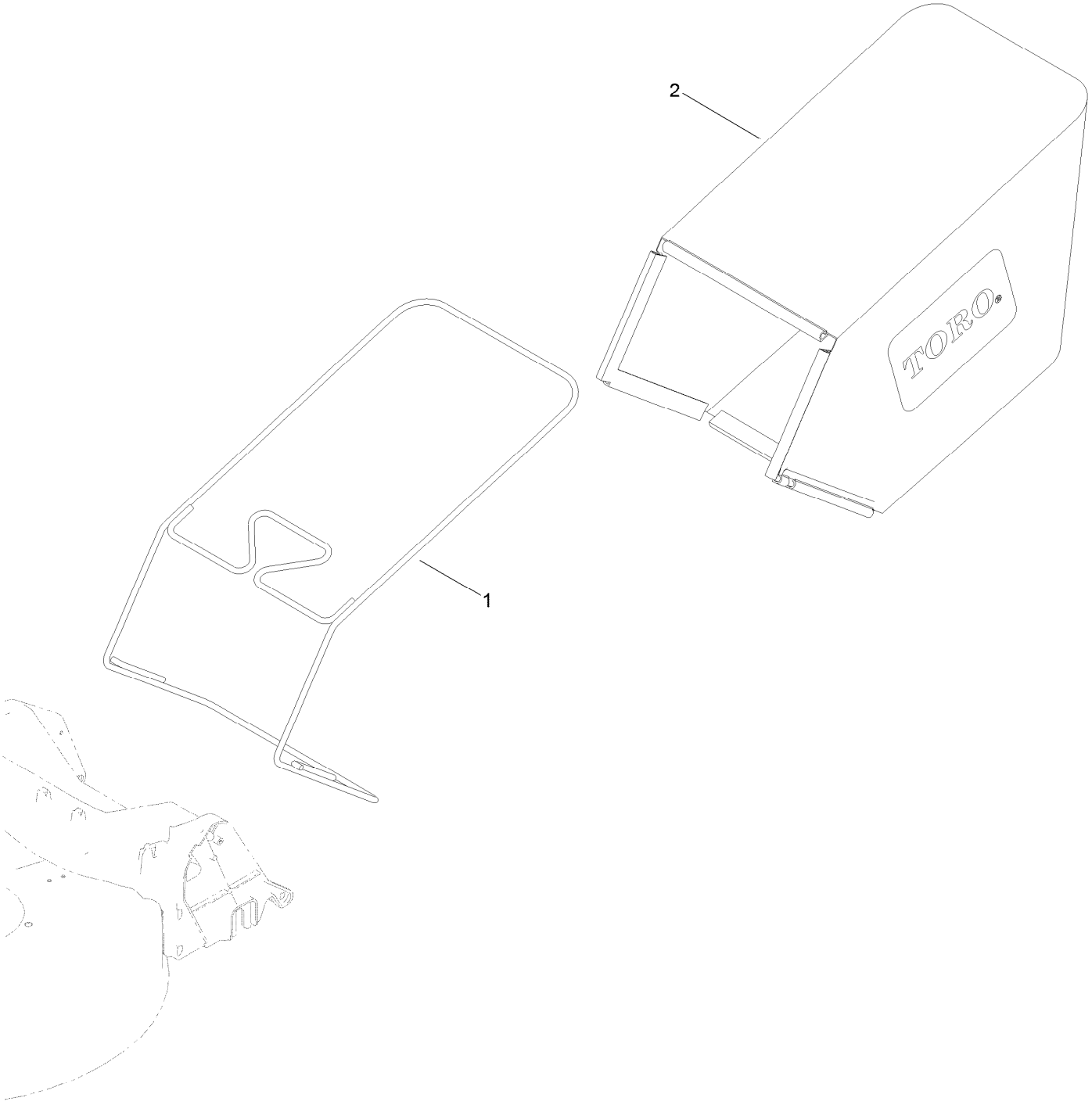

Bag Assembly (continued)

Ref.	*Part Number*	*Qty.*	*Description*
1	131-9697-03	1	Frame-Bag
2	130-6744	1	Bag-Grass

Engine and Blade Assembly

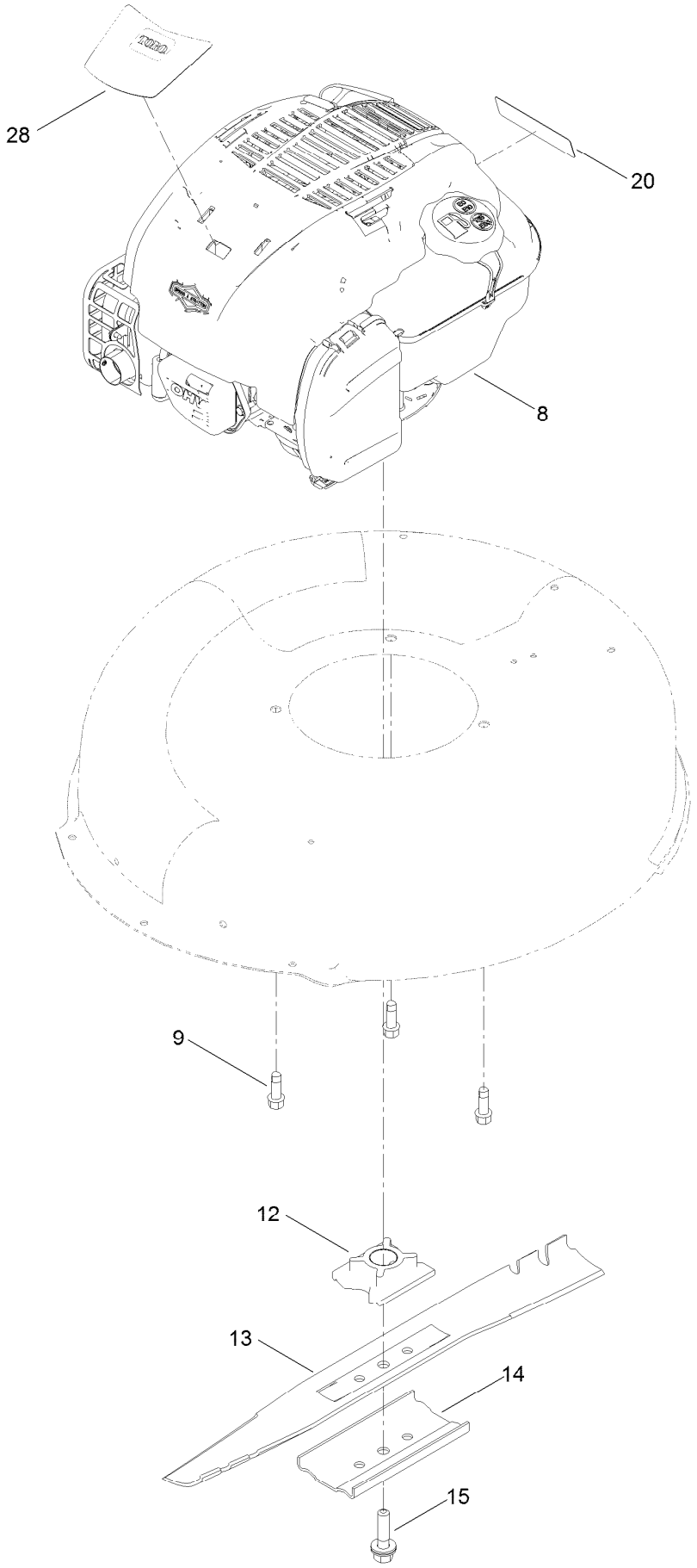

Engine and Blade Assembly (continued)

Ref.	Part Number	Qty.	Description
8		1	Engine-Briggs, 103M020083F1 ●■
9	95-1726	3	Screw-Taptite
12	104-1007	1	Retainer-Blade
13	133-8182-03	1	Blade-21In
14	108-3766-03	1	Support-Blade
15	125-2466	1	Bolt-Blade
20	117-2718	1	Decal-Arrester, Spark
28	137-9136	1	Decal-Engine

● Not serviced separately

■ Obtain parts from www.briggsandstratton.com

Front Wheel Assembly

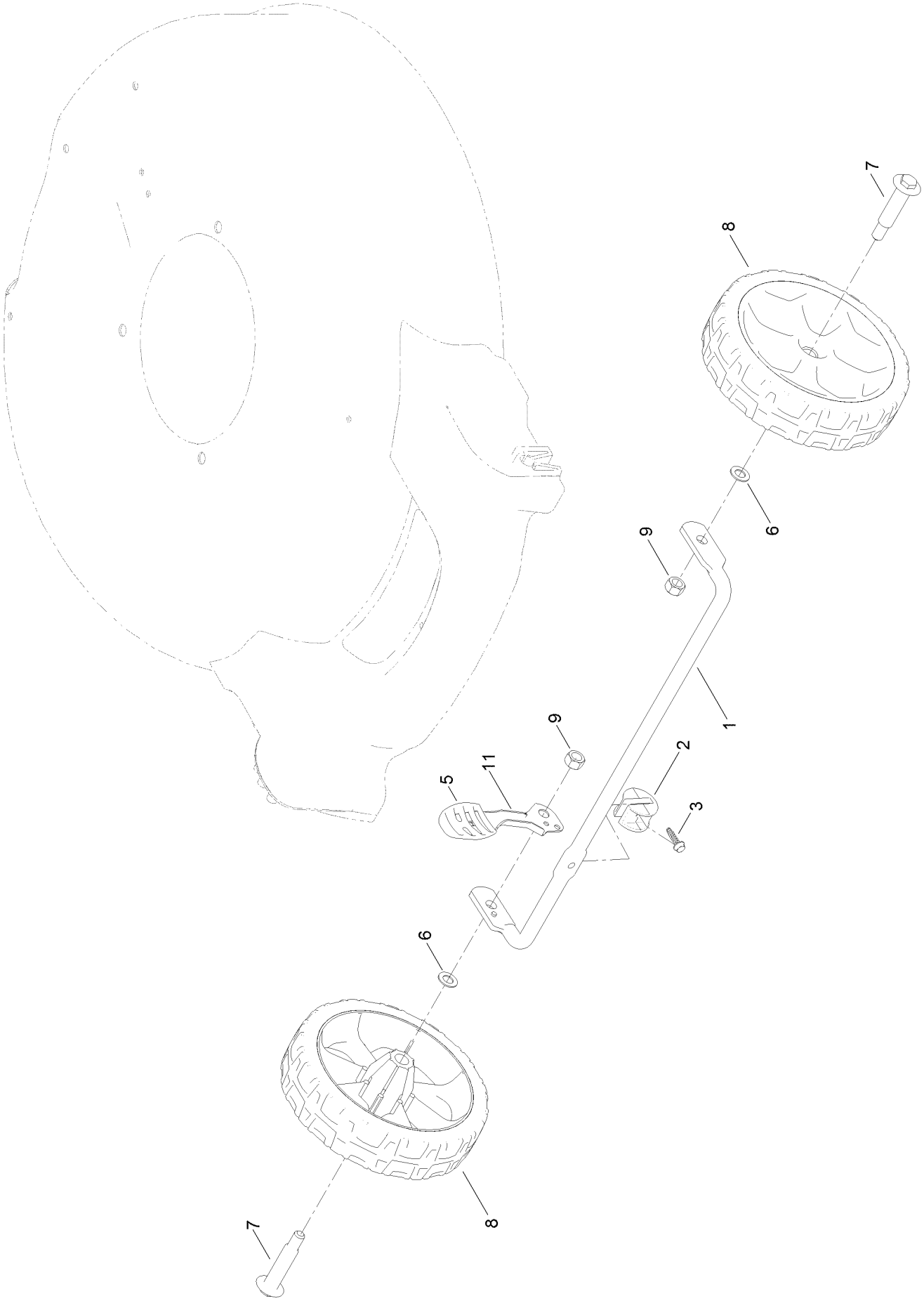

Front Wheel Assembly (continued)

Ref.	Part Number	Qty.	Description
1	127-0668-03	1	Axle-Front
2	127-6800	1	Stop-Axle
3	127-6831	1	Screw-HWH
5	105-3042	1	Knob-Lever, HOC
6	40-1940	2	Washer
7	92-1057	2	Bolt-Shoulder
8	127-0683	2	7 Inch Wheel ASM
9	125-5069	2	Nut-Hex
11	133-8154	1	Arm-Spring

Rear Wheel Assembly

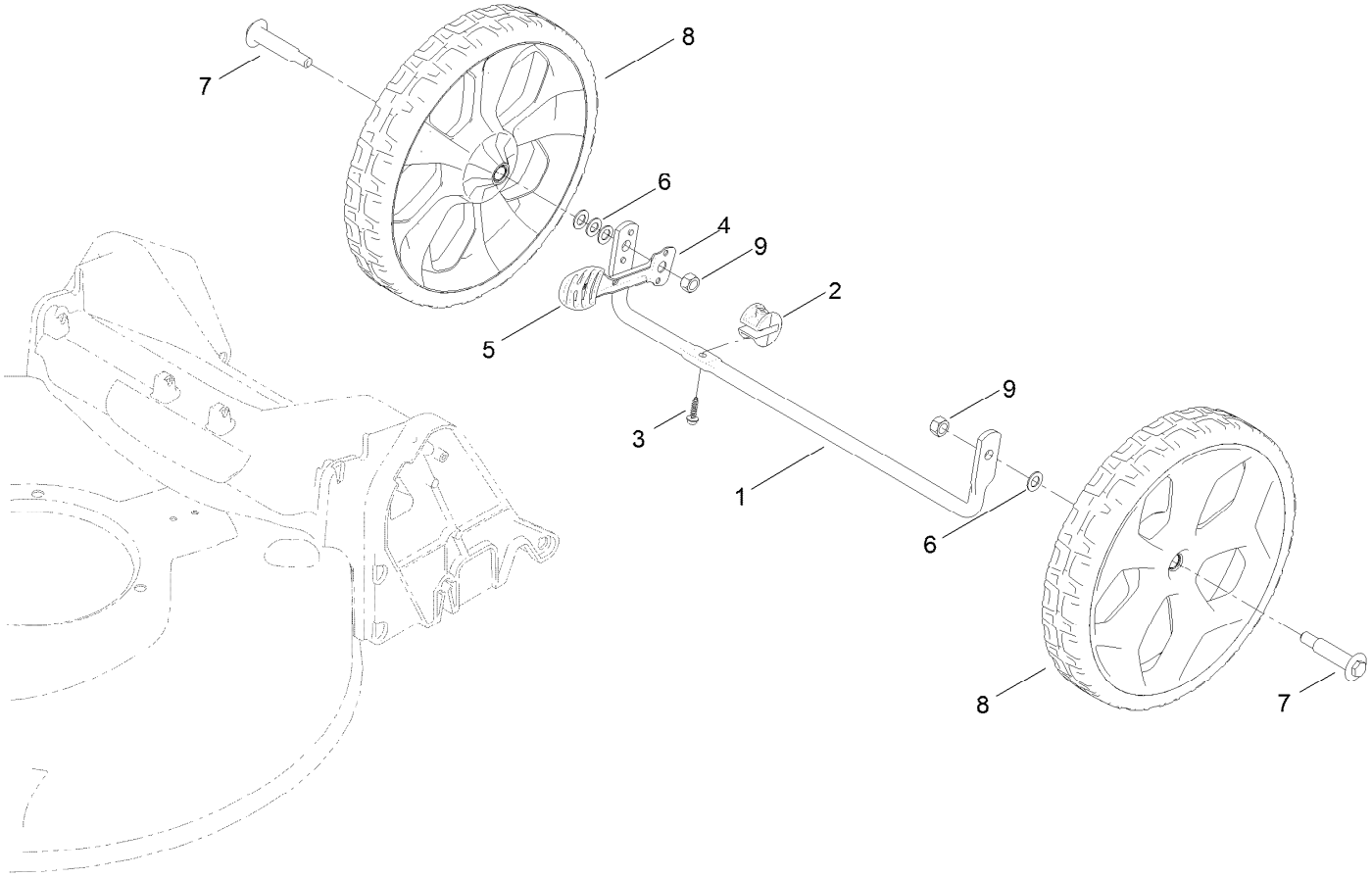

Rear Wheel Assembly (continued)

Ref.	Part Number	Qty.	Description
1	127-0669-03	1	Axle-Rear
2	127-6800	1	Stop-Axle
3	127-6831	1	Screw-HWH
4	127-0697	1	Arm-Spring, Rear
5	105-3042	1	Knob-Lever, HOC
6	40-1940	4	Washer
7	92-1057	2	Bolt-Shoulder
8	127-0686	2	11 Inch Wheel ASM
9	125-5069	2	Nut-Hex

Handle Assembly

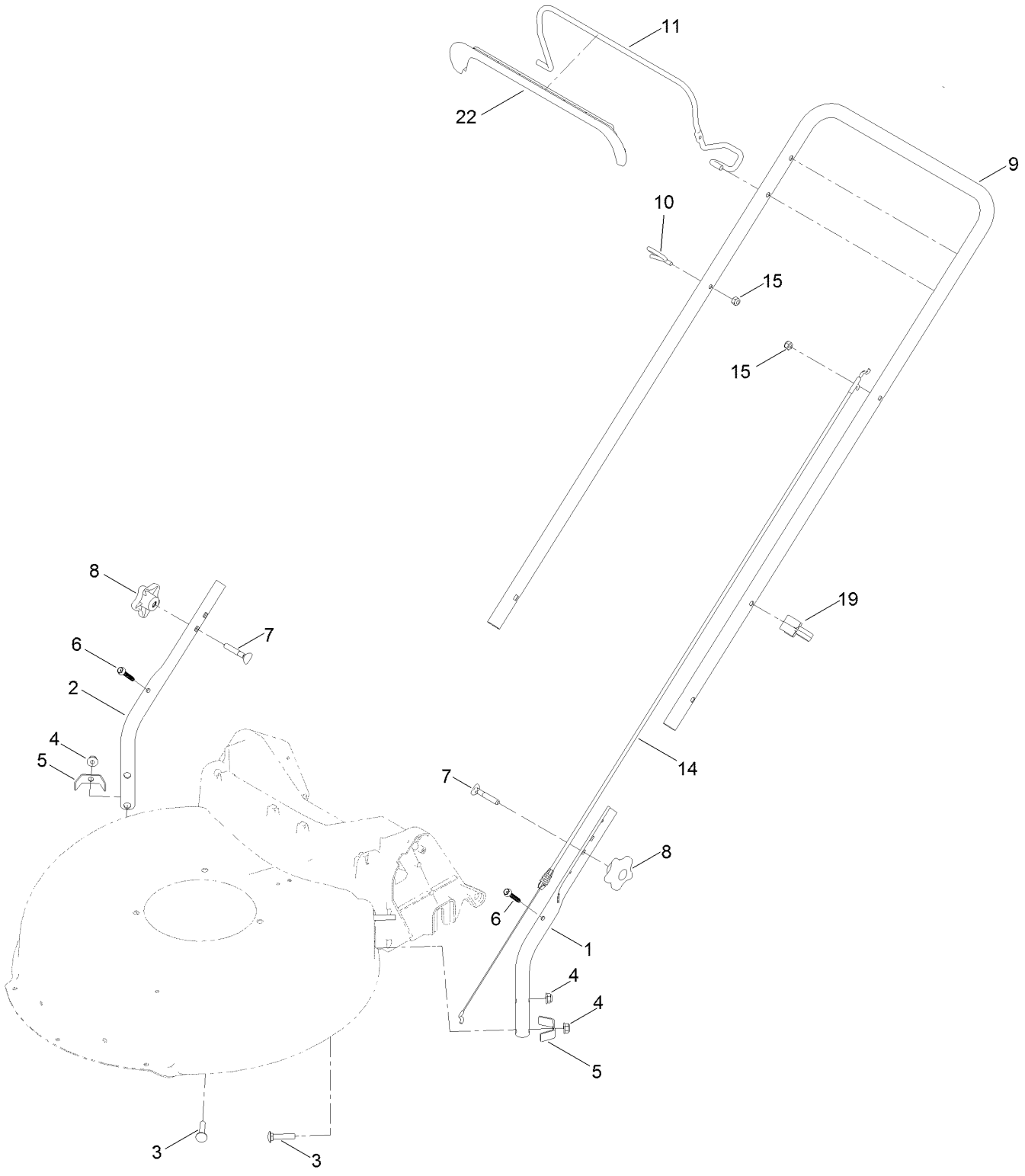

Handle Assembly (continued)

Ref.	Part Number	Qty.	Description
1	136-5923-05	1	Handle-Lower, LH
2	136-5924-05	1	Handle-Lower, RH
3	130-6654	4	Bolt-CARR
4	130-6655	4	Nut-Flange, NI
5	127-0699	2	Bracket-Chute
6	130-6659	2	Screw-Flange, Serrated
7	92-2260	2	Screw-Handle
8	117-5976	2	Knob-Handle
9	137-4826-05	1	Handle-Upper
10	86-9671	1	Guide-Rope
11	137-4798-03	1	Bail-Brake
14	127-0713	1	Cable-Brake, Engine
15	3296-73	1	Nut-Lock, NI
19	114-7988	1	Guide-Cable
22	137-4797	1	Cover-Bail

Attachments and Accessories

For 21320 21in Recycler/Rear Bagging Lawn Mower

Product Name	Model/Part
Fuel Stabilizer .05 oz	130-2393
Briggs Maint Kit	130-8148
Side-Discharge Deflector, 2013 and After 21in Steel Deck Mower	136-7060
Lawn Striping Kit with 22in Roller	20601
Lawnmower Cover	490-7462

Notes:

Notes:

Notes:



Count on it.