Form No. 3396-626 Rev E

TORO®

Count on it.

Parts Catalog

Power Max® 826 OXE

Snowthrower

Model No. 37781—Serial No. 316000001 and Up

Register at www.Toro.com.
Original Instructions (EN)

3396-626 E

Ordering Replacement Parts

To order replacement parts, please supply the part number, the quantity, and the description of each part desired.

Understanding Reference Numbers

Each identified part in an illustration has a reference number. The reference number for a part also appears in the parts list, along with other information about the part.

This catalog uses two special reference number formats, one to indicate parts in a service assembly and another to indicate the quantity of a given part in an illustration.

Service Assembly Reference Numbers

Parts in service assemblies have reference numbers in the form a:b. The a represents the reference number of the entire service assembly and the b represents a sequential number unique to each part within the service assembly.

For example, a wheel assembly might be identified by reference number 6, the tire by 6:1, the valve by 6:2, and the wheel by 6:3. When you order the assembly identified by reference number 6, you receive all parts identified by reference numbers 6:1,6:2, and 6:3. However, you may also order any part individually. Reference numbers of this type appear in illustration and in parts lists.

Reference Numbers Indicating Quantity

In an illustration, if a reference number indicates more than one part, the reference number has the form nX y. The n represents the quantity of the part, the X is the multiplication symbol, and the y represents the reference number.

For example, in an illustration, the reference number 2X 37 means that two of the parts identified by reference number 37 are indicated.

Contents

Main Frame and Auger Housing Assembly 4
Pulleys and Bellcrank Assembly 6
Impeller Drive Assembly 8
Drive Assembly 10
Tire and Drive Assembly 12
Gearbox, Auger and Impeller Assembly 14
26 Inch Auger Gearcase Assembly No. 119-7641 16
Impeller Assembly 18
Engine Pulley and Belt Assembly 20
Fuel System and Carburetor Assembly 22
Intake and Exhaust Assembly 24
Ignition and Electrical Assembly 26
Crankcase Assembly 28
Governor Assembly 30
Piston and Head Assembly 32
Blower Housing and Shrouds Assembly 34
Engine Decal Assembly 36
Chute Assembly 38
Quick Stick Assembly 40
Handle Assembly 42
Control Assembly 44
Attachments and Accessories 46

© 2019—The Toro® Company
8111 Lyndale Avenue South
Bloomington, MN 55420

Contact us at www.Toro.com.
Printed in the USA.
All Rights Reserved

Main Frame and Auger Housing Assembly

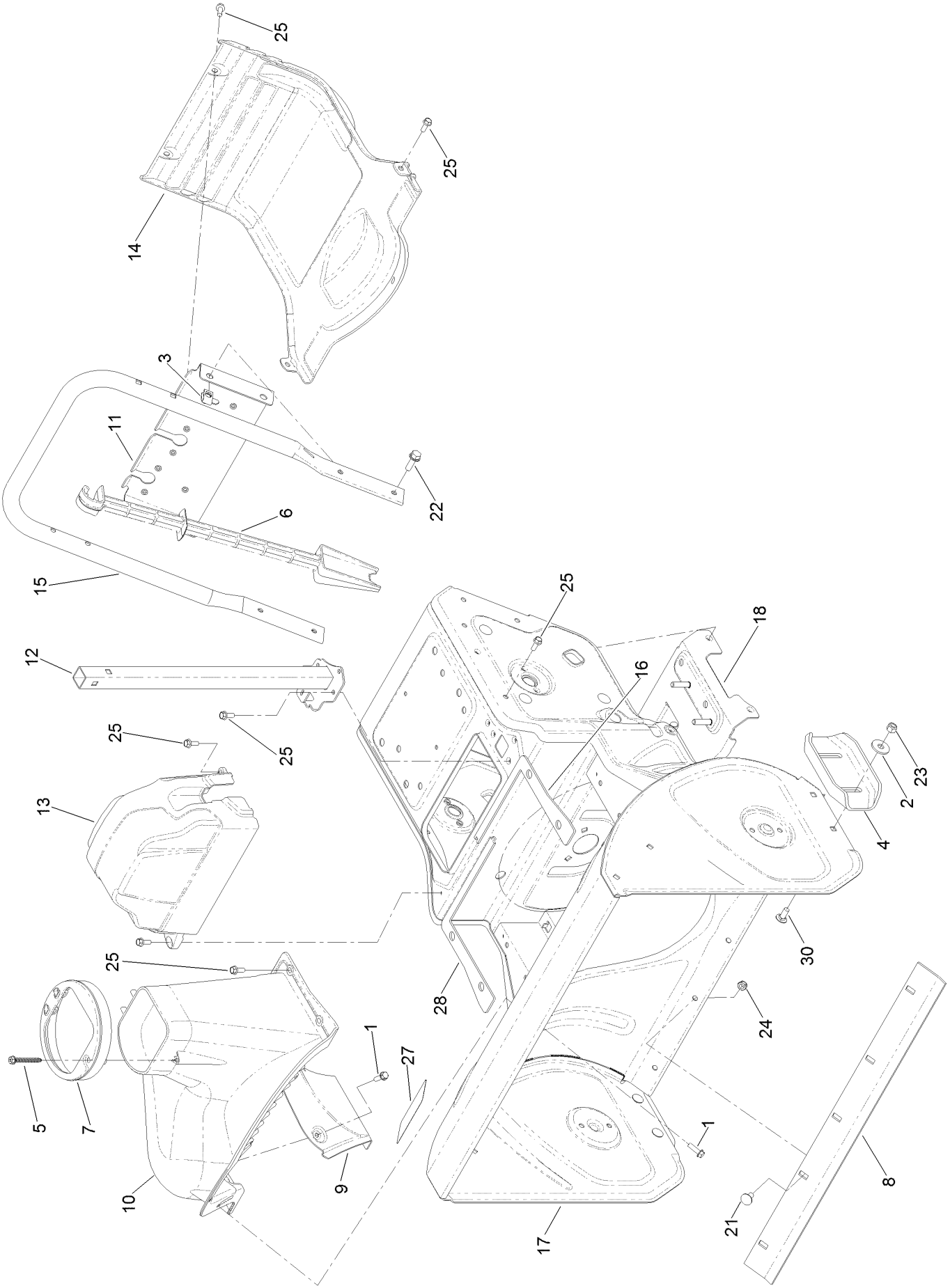

Main Frame and Auger Housing Assembly (continued)

Ref.	Part Number	Qty.	Description
1	46-8091	6	Screw-HWH
2	52-2861	4	Washer
3	94-2413	4	Nut-U
4	106-4588-01	2	Skid
5	114-3751	1	Screw-HWH, Plastite
6	121-6833	1	Stick-Cleanout
7	119-7626	1	Guide-Chute
8	120-3872-01	1	Scraper-26 Inch
9	120-7158-01	1	Cover-Liner
10	120-7159	1	Cover
11	120-7161-01	1	Brace-Frame
12	120-7170-03	1	Support-Chute
13	120-7177	1	Cover-Belt
14	120-7178	1	Cover-Lower
15	120-7179-03	1	Handle-Lower
16	120-7181	1	Seal-Housing, LH
17	131-6469	1	Frame ASM
18	121-1218	1	Plate-Stud Engine
21	3230-18	5	Screw-CARR
22	3234-29	4	Screw-HHF
23	3296-29	4	Nut-Lock, NI
24	3296-47	5	Nut-Lock, NI
25	32144-85	17	Screw-HWH
27	121-6817	1	Decal-Danger, Auger
28	121-6841	1	Seal-Housing, RH
30	3230-23	4	Screw-CARR

Pulleys and Bellcrank Assembly

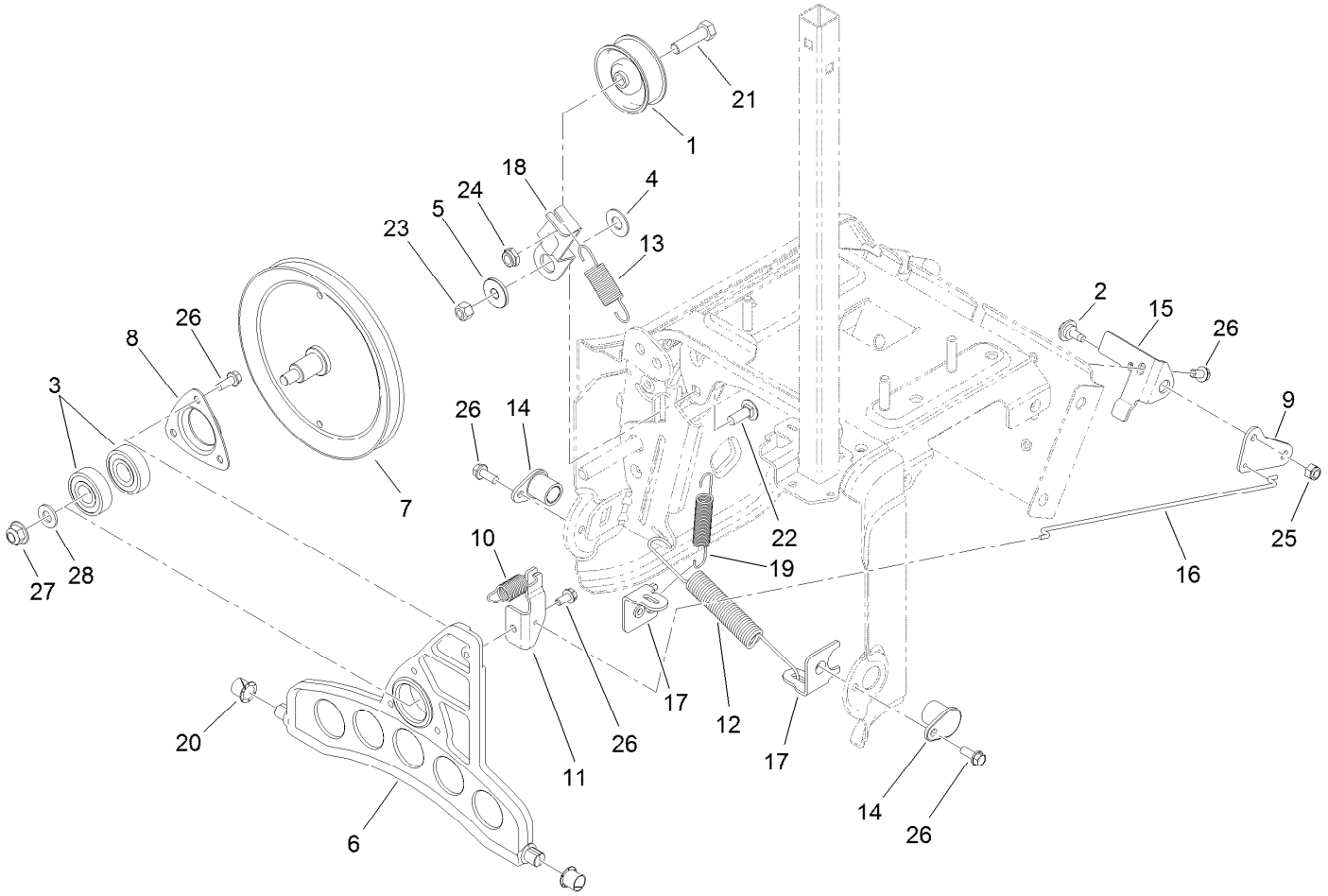

Pulleys and Bellcrank Assembly (continued)

Ref.	Part Number	Qty.	Description
1	3-4244	1	Pulley-Idler
2	92-9698	1	Screw-Shoulder
3	100-1048	2	Bearing-Ball
4	25-5640	1	Washer
5	117-7711	1	Bushing-Idler
6	119-7645	1	Plate-Wheel, Friction
7	119-7648	1	Pulley-Traction
8	119-7649	1	Retainer-Bearing
9	119-7670-03	1	Bellcrank-Drive
10	119-7676	1	Spring-Extension
11	119-7679	1	Bracket-Plate, Traction
12	120-3883	1	Spring-Extension
13	120-3888	1	Spring-Extension
14	120-7156	2	Bushing-Plate, Traction
15	120-7165-03	1	Bracket-Bellcrank
16	120-7166	1	Link-Drive
17	120-9271	2	Bracket-Anchor, Spring
18	120-9273	1	Arm-Idler, Traction
19	120-9275	1	Spring-Extension
20	256-257	2	Bushing-Nyliner
21	323-29	1	Screw-HH
22	3230-10	1	Bolt-CARR
23	3296-29	1	Nut-Lock, NI
24	3296-59	1	Nut-Lock, NI
25	3296-73	1	Nut-Lock, NI
26	32144-85	7	Screw-HWH
27	104-8301	1	Nut-HF, NI
28	3256-24	1	Washer-Flat

Impeller Drive Assembly

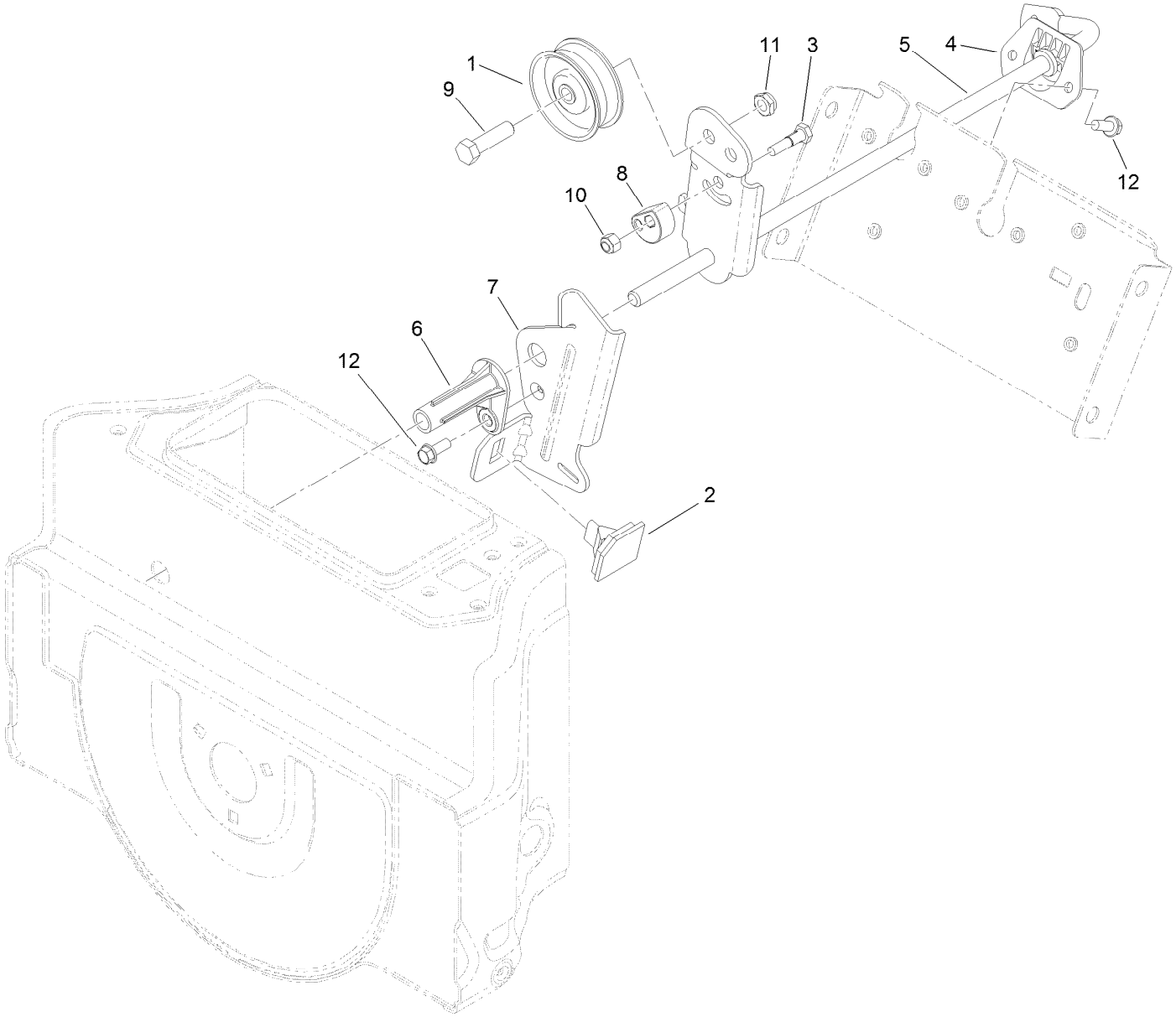

Impeller Drive Assembly (continued)

Ref.	Part Number	Qty.	Description
1	3-4244	1	Pulley-Idler
2	66-8060	1	Pad-Brake
3	119-3301	1	Bolt-Pivot, Eccentric
4	120-7167	1	Bushing-Rod, Clutch
5	120-9254-03	1	Impeller Clutch ASM
6	120-9256	1	Pivot-Brake, Impeller
7	120-9257-03	1	Arm-Brake, Impeller
8	120-9276	1	Eccentric-Brake, Impeller
9	323-29	1	Screw-HH
10	3296-42	1	Nut-Lock, NI
11	3296-59	1	Nut-Lock, NI
12	32144-85	3	Screw-HWH

Drive Assembly

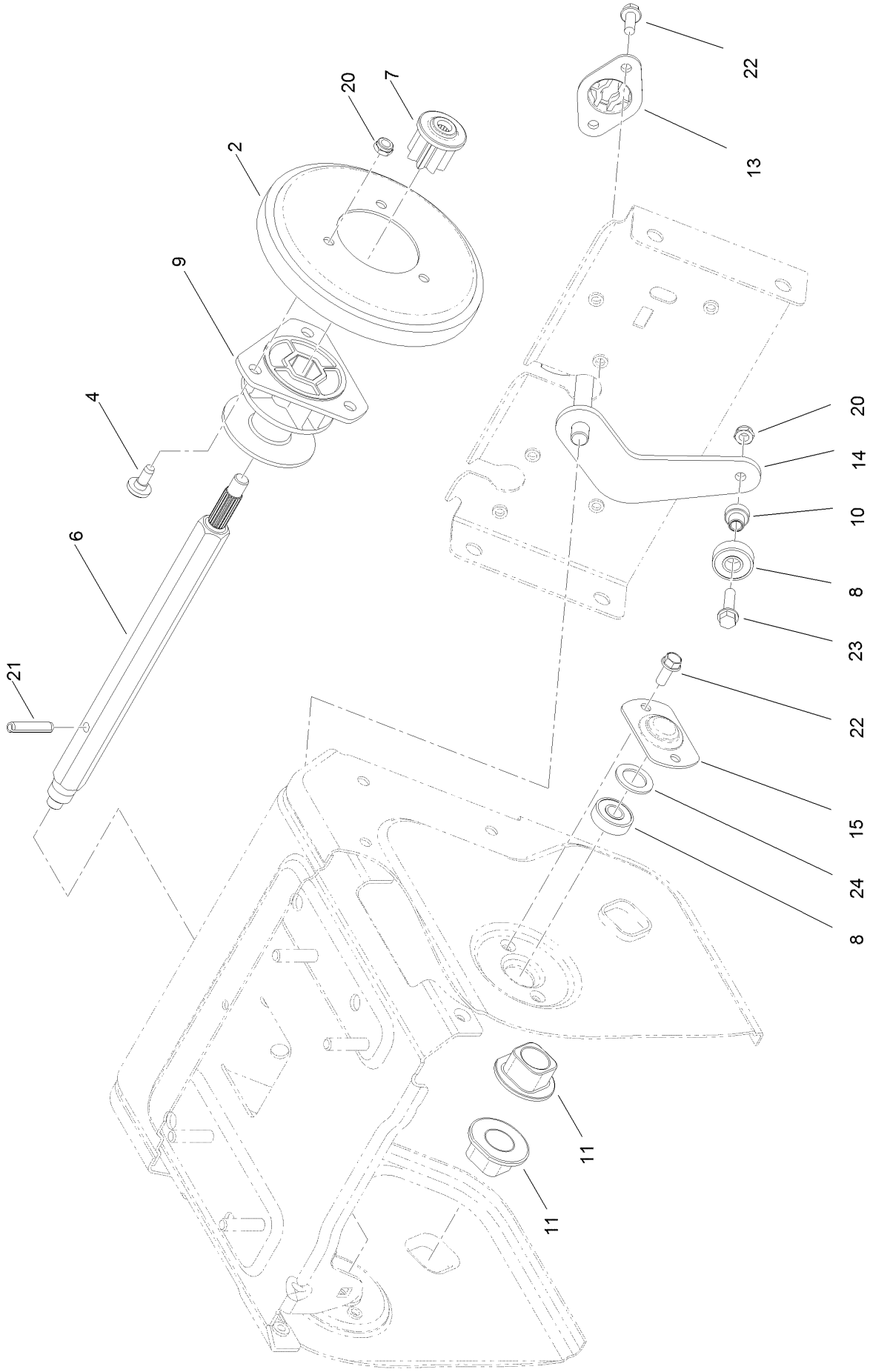

Drive Assembly (continued)

Ref.	Part Number	Qty.	Description
2	119-1567	1	Wheel-Friction
4	120-7950	3	Screw-Shoulder
6	119-7615	1	Shaft-Hex
7	119-7616	1	Gear-Pinion, 8 Tooth
8	121-6835	3	Bearing-Ball
9	119-7630	1	Trunnion
10	119-7684	1	Spacer-Plate, Shift
11	120-7162	2	Bushing-Axle

Ref.	Part Number	Qty.	Description
13	120-7191	1	Retainer-Plate, Shift
14	120-7193-03	1	Shift Plate ASM
15	120-9266	2	Retainer-Bearing
20	3296-56	4	Nut-Lock, NI
21	32121-9	1	Pin-Roll, Slotted
22	32144-85	6	Screw-HWH
23	32144-86	1	Screw-HWHTF
24	121-6840	2	Washer-Rubber

Tire and Drive Assembly

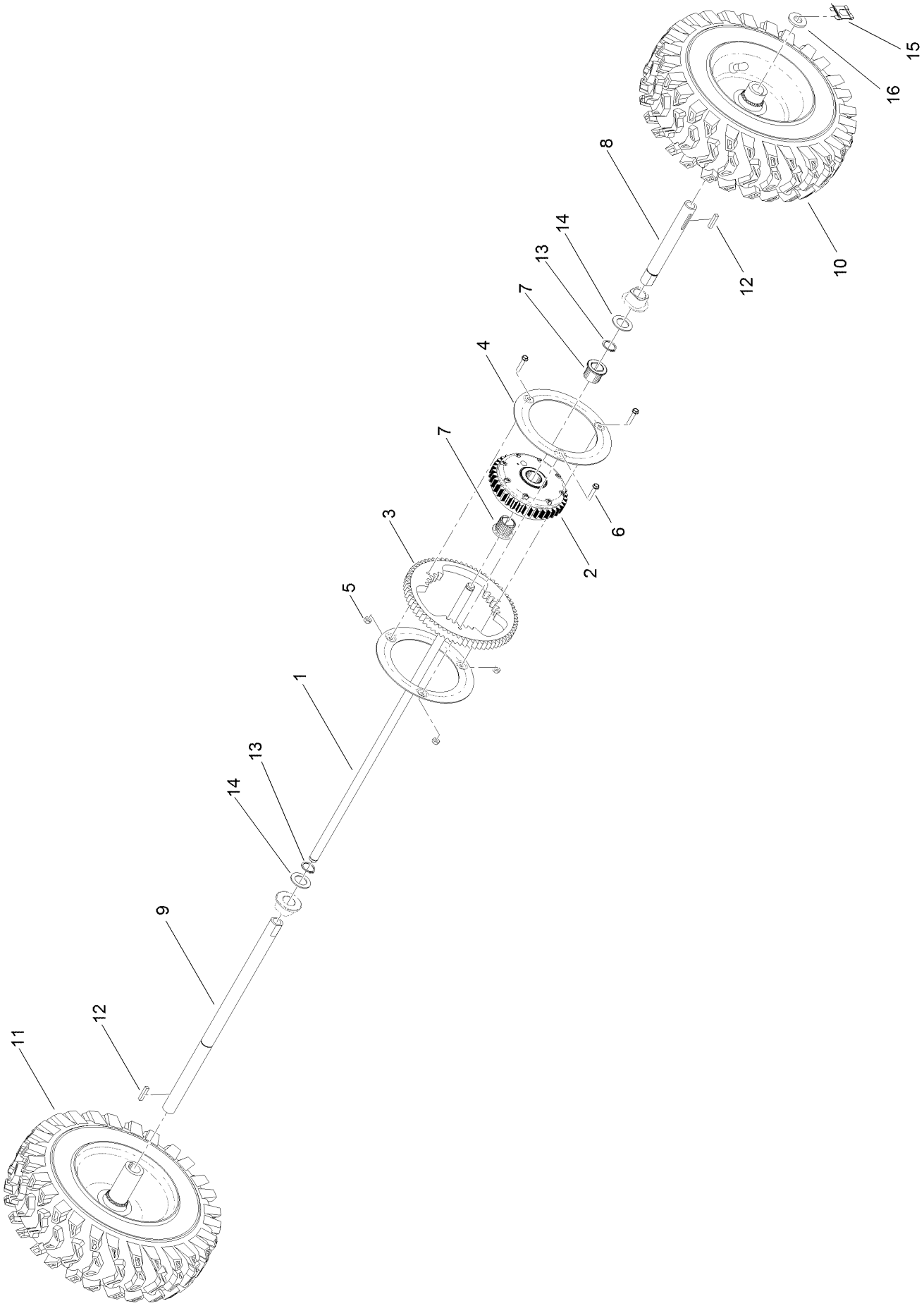

Tire and Drive Assembly (continued)

Ref.	Part Number	Qty.	Description
1	130-9789	1	Axle
2	130-9776	1	Transmission
3	130-9786	1	Gear-Axle
4	130-9798-03	2	Plate-Gear
5	3296-2	3	Nut-Lock, NI
6	131-6456	3	Screw-HWH
7	130-9799	2	Gear-Tube, Axle
8	130-9792	1	Tube-Axle
9	130-9793	1	Tube-Axle
10	131-6450	1	LH Wheel And Tire ASM
11	131-6451	1	RH Wheel And Tire ASM
12	5-1077	2	Key-Square
13	32120-72	2	Ring-Snap
14	3-8664	2	Washer-Thrust
15	95-4064	2	Clip-Pin
16	65-6390	2	Washer-Thrust, Plain

Gearbox, Auger and Impeller Assembly

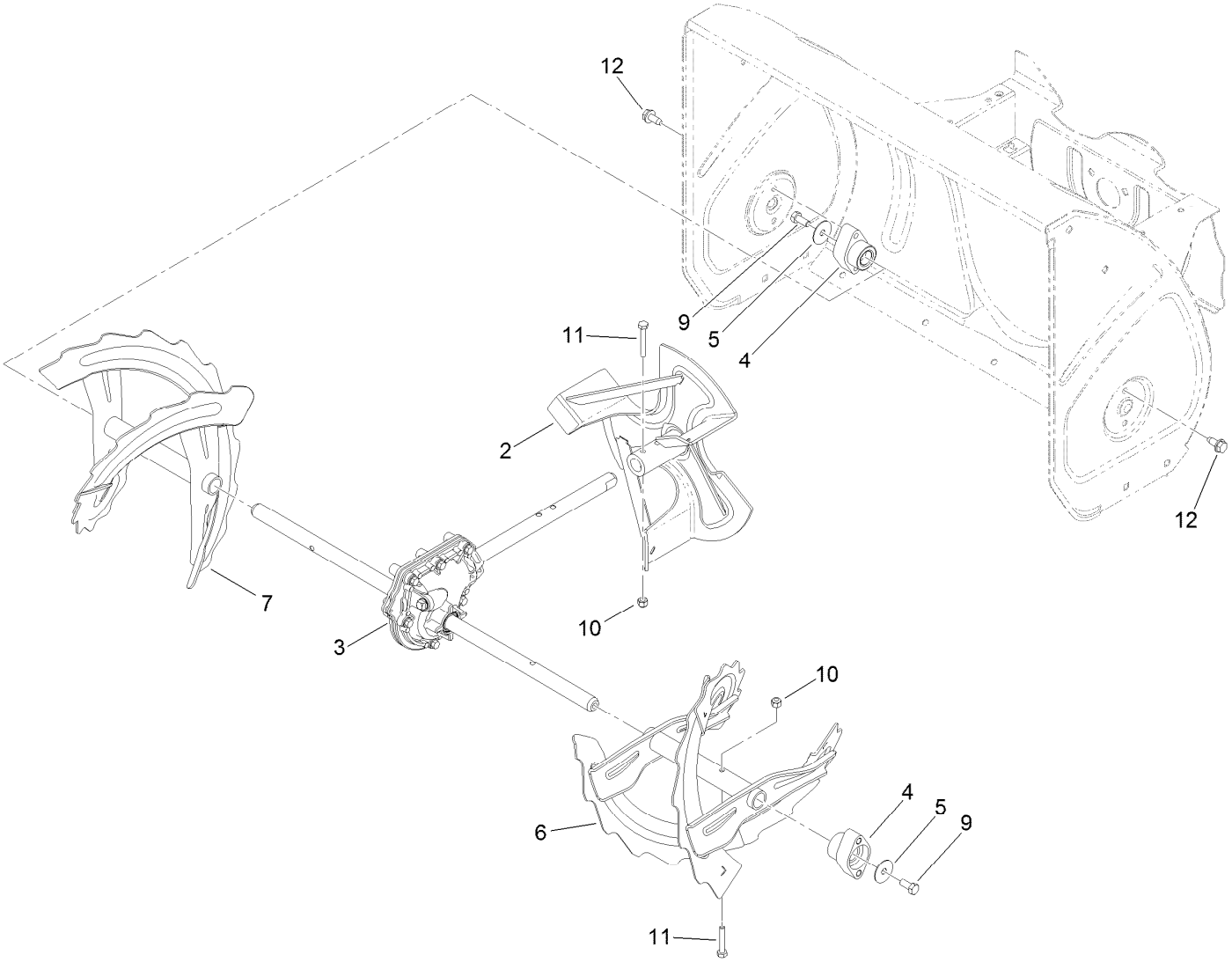

Gearbox, Auger and Impeller Assembly (continued)

Ref.	Part Number	Qty.	Description
2	119-7612-03	1	Impeller ASM
3	119-7641	1	Gearcase ASM
4	120-3860	2	Bearing-Auger
5	120-3862	2	Washer-Thrust
6	120-9287-03	1	LH Auger ASM
7	120-9290-03	1	RH Auger ASM
9	322-3	2	Screw-HH
10	3296-42	4	Nut-Lock, NI
11	321-10	4	Screw-HH
12	32144-70	4	Screw-HWHTF

26 Inch Auger Gearcase Assembly No. 119-7641

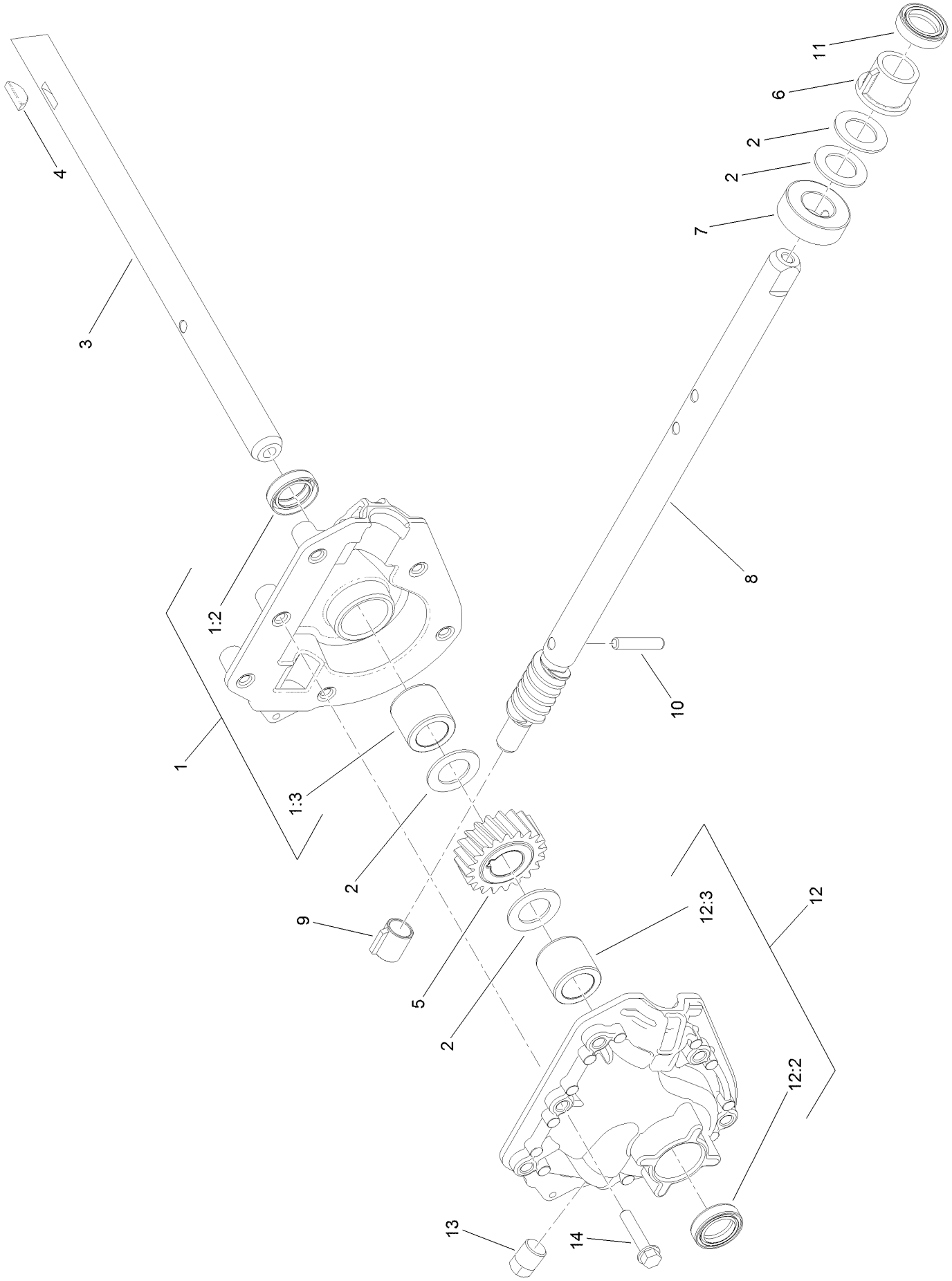

26 Inch Auger Gearcase Assembly No. 119-7641 (continued)

Ref.	Part Number	Qty.	Description
1	121-1209	1	RH Auger Gearcase ASM
1:2	121-6634	1	Seal-Shaft
1:3	120-9269	1	Bushing-Sleeve
2	119-7640	4	Washer-Thrust
3	119-7639	1	Shaft-Output, Auger
4	3257-5	1	Key-Woodruff
5	119-1576	1	Gear-Helical, 20 Tooth
6	119-7635	1	Bushing-Input
7	119-7636	1	Collar-Thrust
8	121-1234	1	Shaft-Impeller, Rolled
9	62-1150	1	Bushing-Worm
10	107-8899	1	Pin-Dowel
11	121-6634	1	Seal-Shaft
12	121-1210	1	LH Auger Gearcase ASM
12:2	121-6634	1	Seal-Shaft
12:3	120-9269	1	Bushing-Sleeve
13	121-6832	1	Plug-Pipe, SQH
14	108-4862	6	Screw-HWHTF

Impeller Assembly

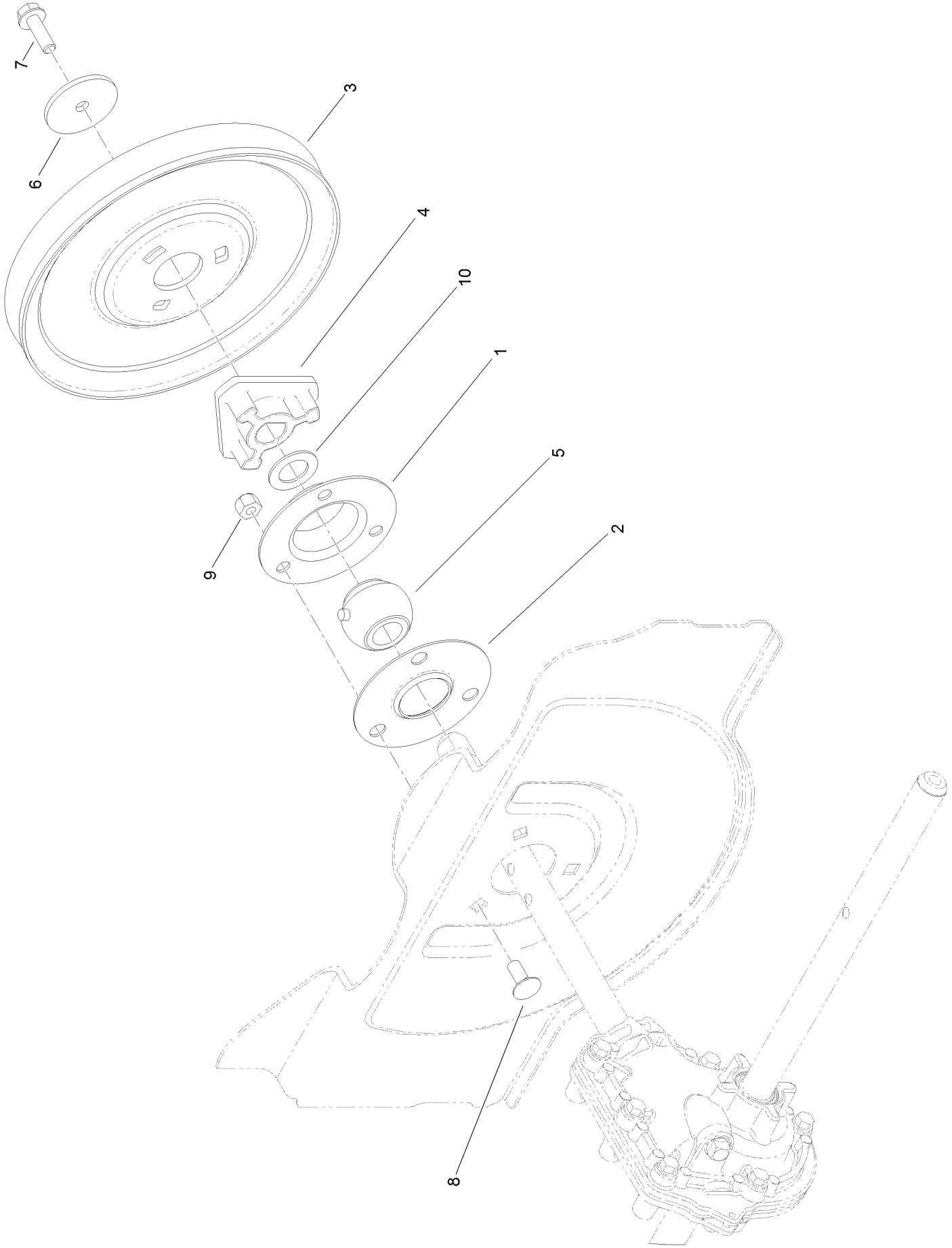

Impeller Assembly (continued)

Ref.	Part Number	Qty.	Description
1	26-6110	1	Flange-Cup, Bearing
2	26-6120	1	Flange-Cup, Bearing
3	120-9263	1	Pulley-Impeller
4	120-9264	1	Hub-Impeller, Pulley
5	120-9272	1	Bearing
6	121-1230	1	Washer-Plain
7	115-5142	1	Screw-HHF
8	3230-23	3	Screw-CARR
9	3296-29	3	Nut-Lock, NI
10	119-7640	1	Washer-Thrust

Engine Pulley and Belt Assembly

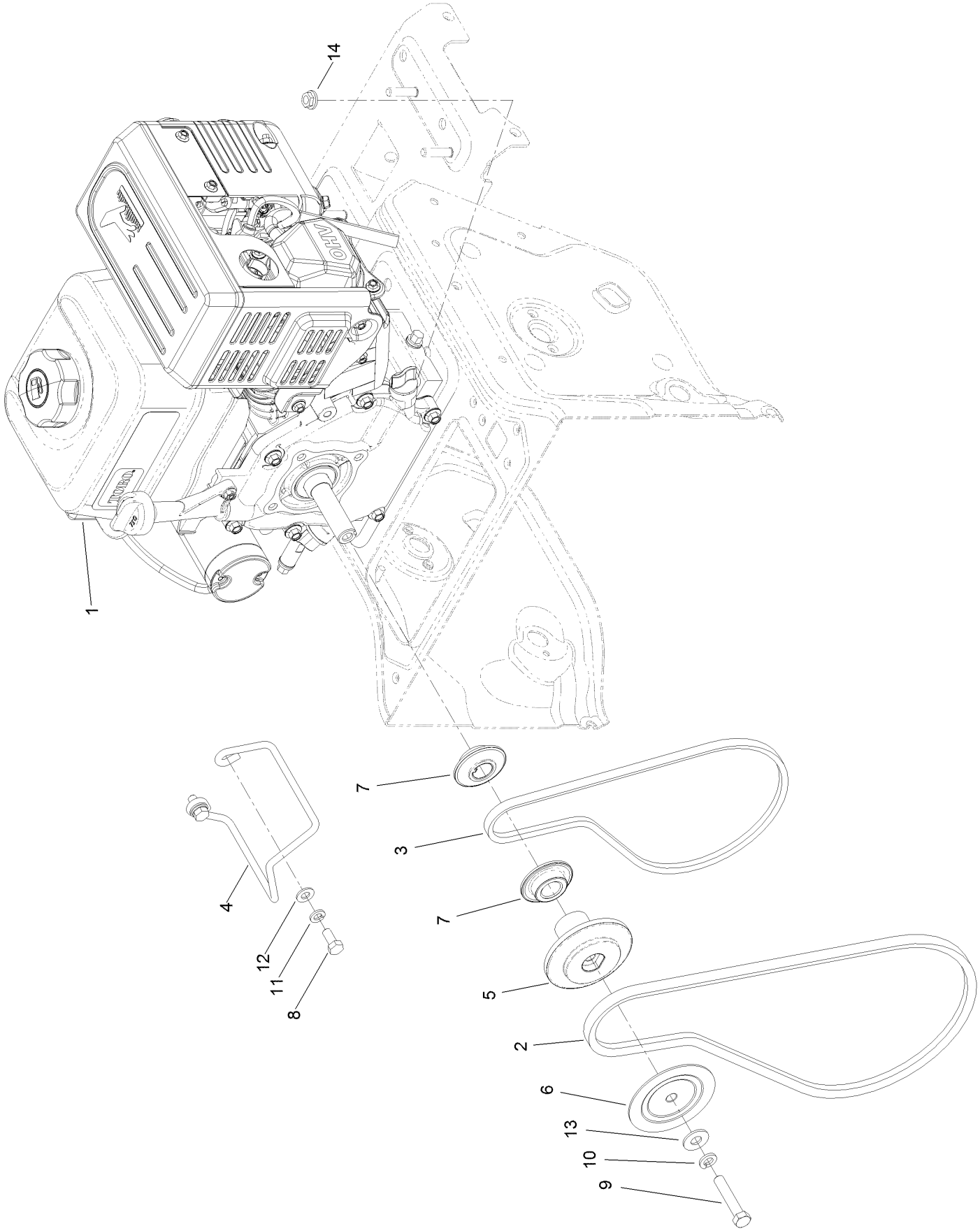

Engine Pulley and Belt Assembly (continued)

Ref.	Part Number	Qty.	Description
1	127-9168	1	Engine-G250Fds-1
2	120-3892	1	Belt-V
3	120-3893	1	Belt-V
4	120-7196	1	Guide-Belt
5	120-9283	1	Pulley-Auger, Rear
6	120-9284	1	Pulley-Auger, Front
7	121-6804	2	Pulley-Traction
8	33114-020	2	Screw-HH
9	120-2302	1	Screw-HH
10	3253-21	1	Washer-Lock
11	3253-4	2	Washer-Lock
12	3256-23	2	Washer-Plain
13	3256-4	1	Washer-Flat
14	32128-20	4	Nut-HF

Fuel System and Carburetor Assembly

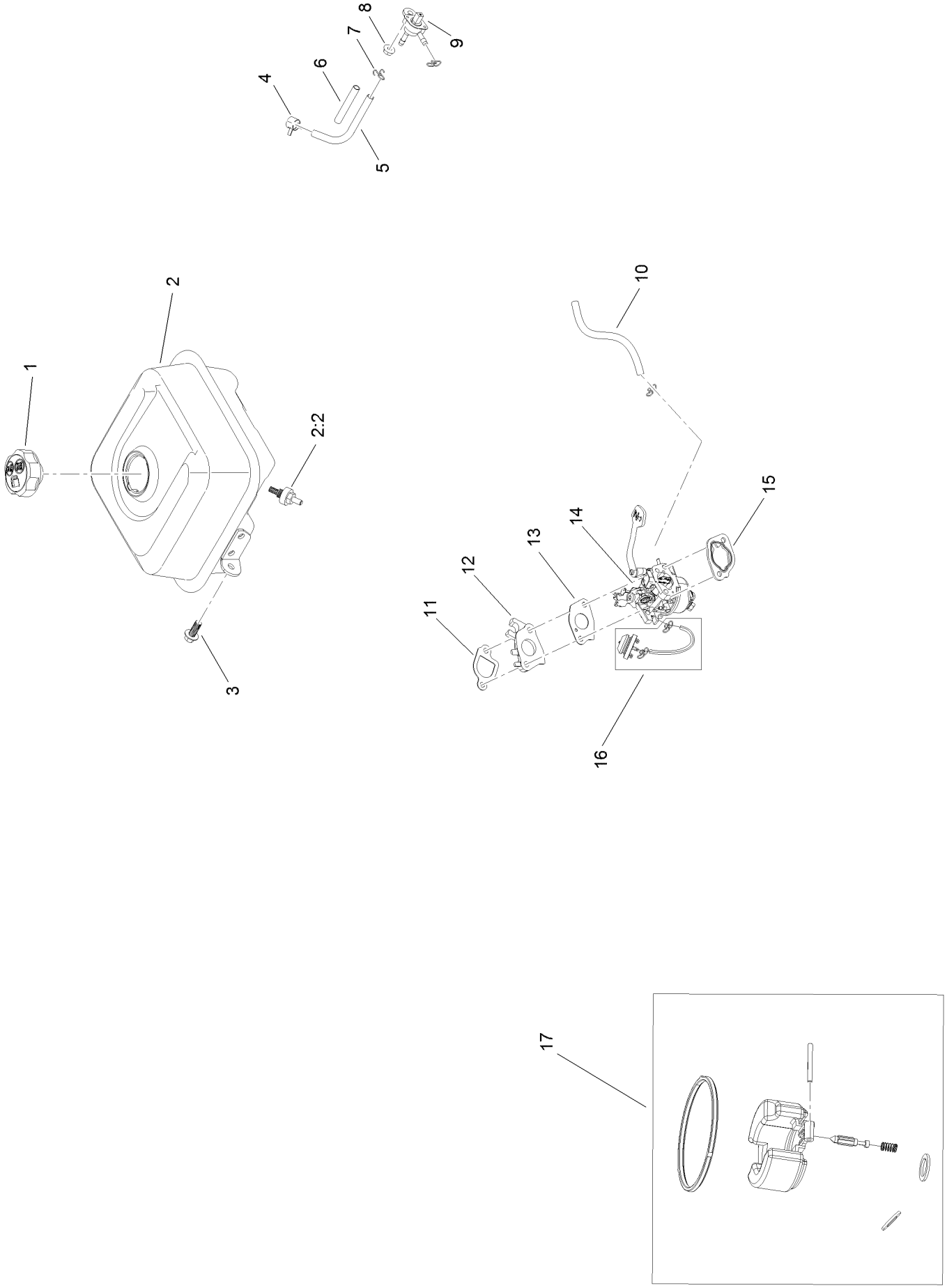

Fuel System and Carburetor Assembly (continued)

Ref.	Part Number	Qty.	Description
1	127-9365	1	Cap-Fuel (Phase 3)
2	133-1553	1	Fuel Tank And Filter ASM
2:2	127-9065	1	Filter-Fuel
3	121-0294	1	Screw-HHF
4	127-9120	1	Clamp-Hose
5	133-1556	1	Hose-Fuel
6	133-1538	1	Sleeve-Abrasion
7	121-0087	3	Clamp-Hose
8	120-4236	1	Nut-Flange
9	127-9117	1	Valve-Fuel
10	127-9489	1	Hose-Fuel
11	133-1531	1	Gasket-Carburetor
12	133-1532	1	Insulator-Carburetor
13	133-1533	1	Gasket-Carburetor
14	133-1534	1	Carburetor ASM
15	121-0080	1	Gasket-Carburetor
16	127-9079	1	Primer Kit
17	127-9395	1	Internal Carb Service Kit
99	133-9937	1	High Altitude Kit ●

● Not illustrated

Intake and Exhaust Assembly

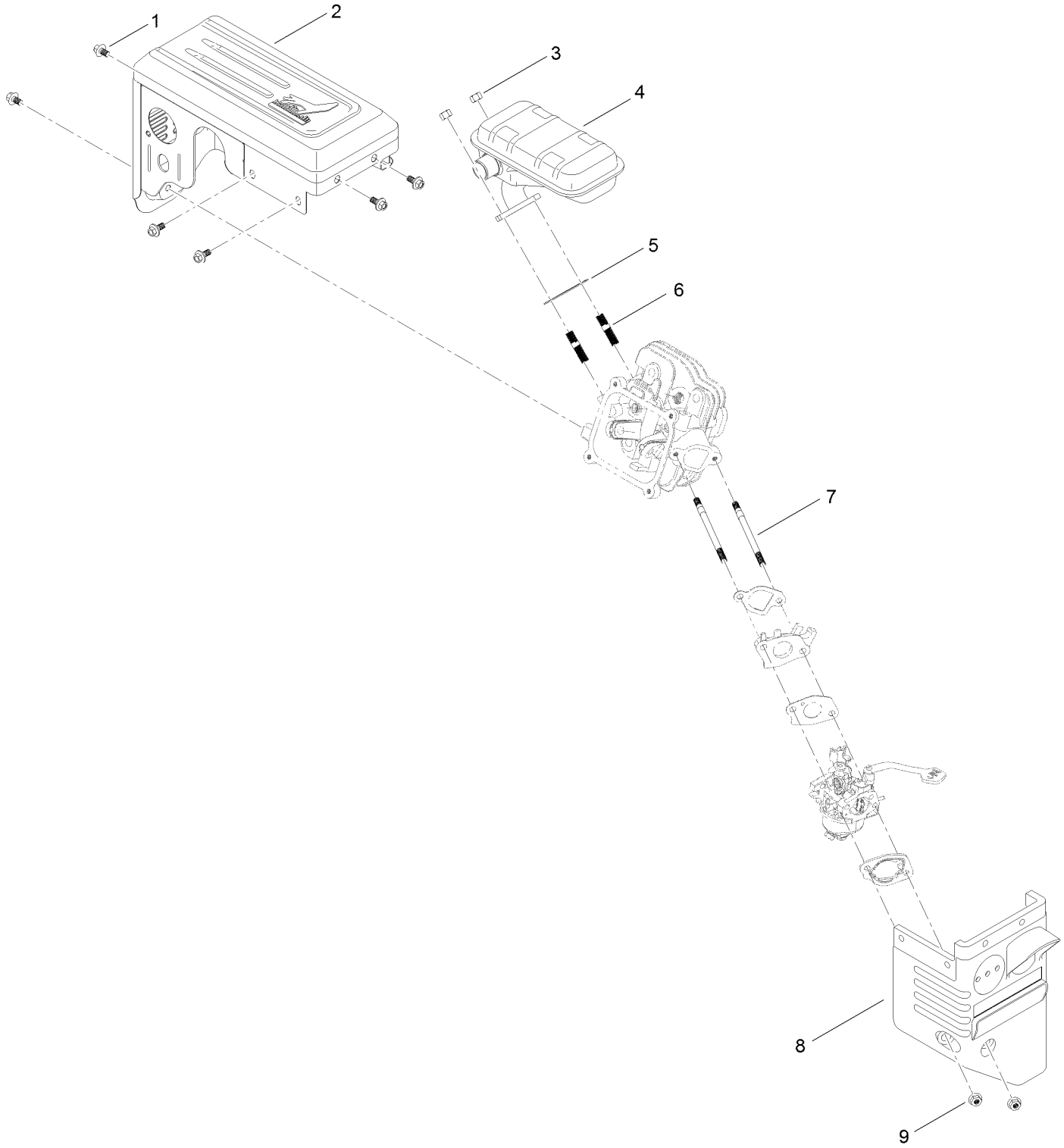

Intake and Exhaust Assembly (continued)

Ref.	Part Number	Qty.	Description
1	121-0294	6	Screw-HHF
2	127-9491	1	Muffler Cover ASM
3	121-0199	2	Nut-HH
4	127-9490	1	Muffler ASM
5	133-1539	1	Gasket-Exhaust
6	121-0464	2	Stud-Exhaust
7	121-4112	2	Stud-Intake
8	127-9112	1	Box-Heater
9	121-0308	2	Nut-Flange

Ignition and Electrical Assembly

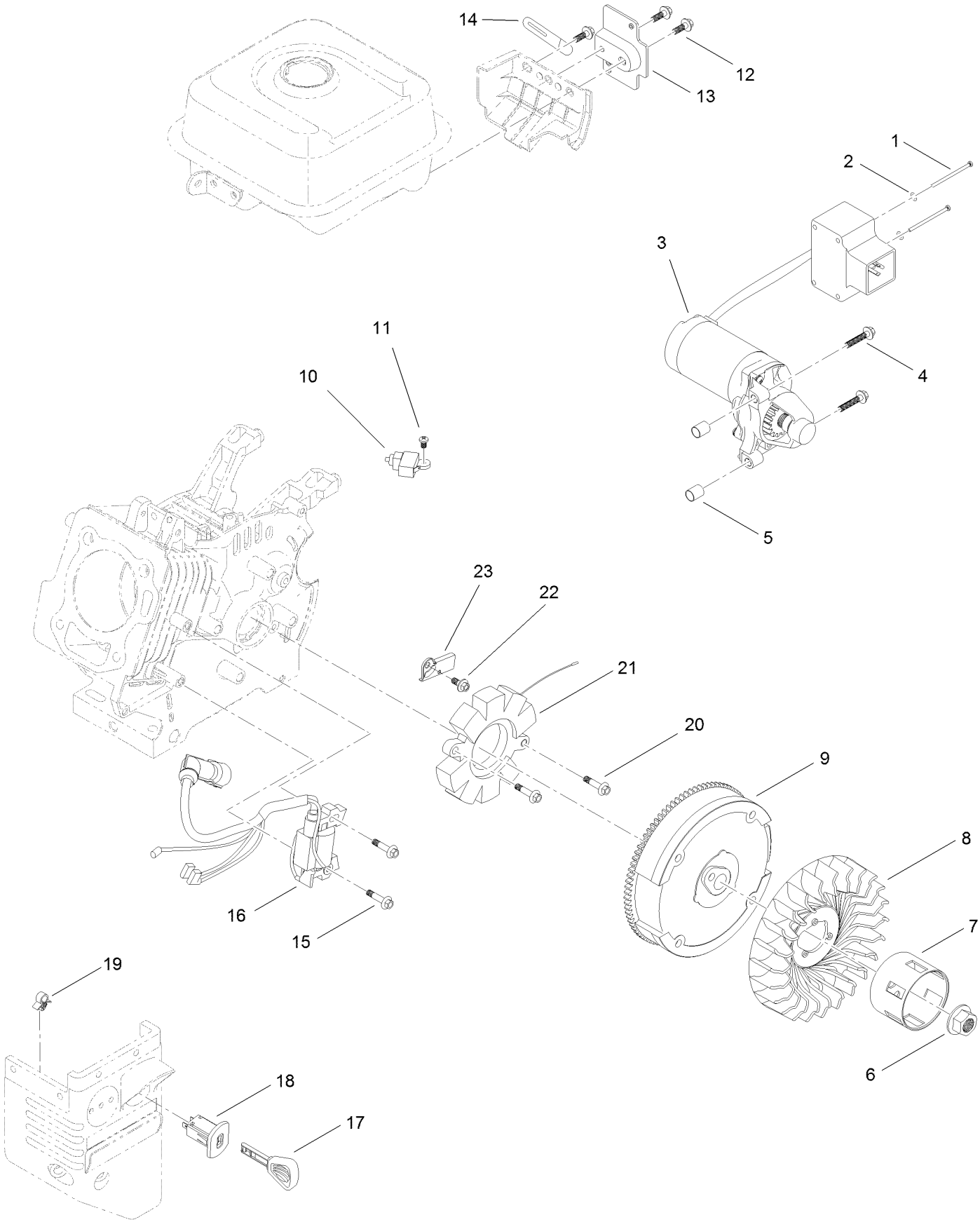

Ignition and Electrical Assembly (continued)

Ref.	Part Number	Qty.	Description
1	121-0306	2	Screw-Bhp
2	121-0312	2	Washer-Plain
3	133-1547	1	Motor-Starter
4	133-1546	2	Screw-Flange
5	121-0055	2	Pin-Dowel
6	121-0047	1	Nut-Flange
7	133-1527	1	Cup-Starter
8	133-1526	1	Fan-Cooling
9	127-9484	1	Flywheel ASM
10	121-0284	1	Switch-Kill, Engine
11	120-4461	1	Screw-PPH
12	127-9123	3	Screw-HHF
13	133-1554	1	Bracket-Switchbox, Starter
14	121-0017	1	Clip-Harness, Wire
15	121-0097	2	Screw-HHF
16	127-9105	1	Ignition Coil ASM
17	117-7728	1	Key
18	121-0283	1	Switch-Key
19	121-0326	1	Clip
20	121-0196	2	Screw-HHF
21	127-9485	1	Alternator
22	121-0116	1	Screw-HHF
23	127-9486	1	Clamp-Wire, Charge

Crankcase Assembly

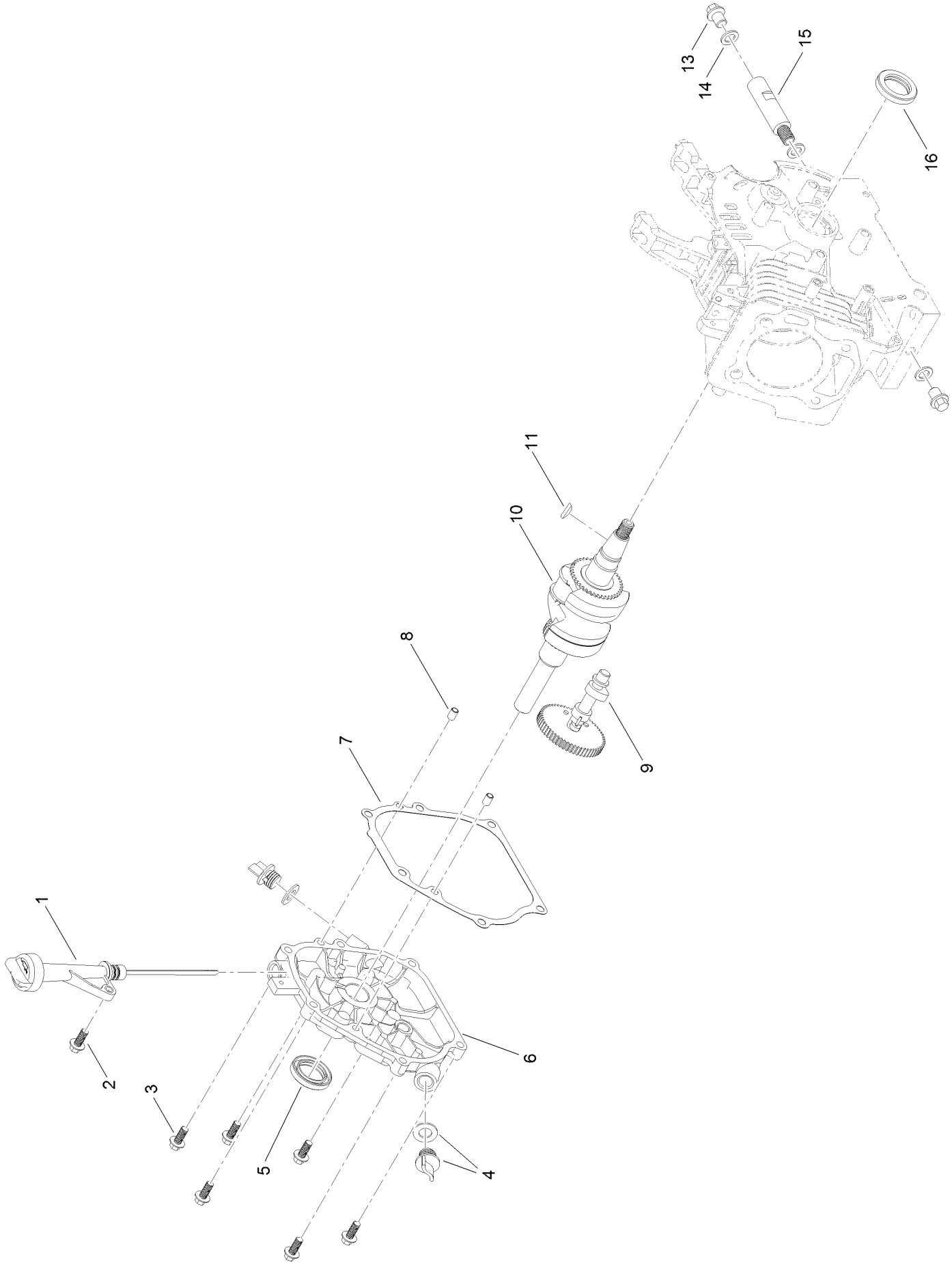

Crankcase Assembly (continued)

Ref.	Part Number	Qty.	Description
1	133-1519	1	Oil Fill ASM
2	127-9123	1	Screw-HHF
3	121-4114	6	Screw-HHF
4	127-9099	2	Oil Cap ASM
5	133-1516	1	Seal-Oil
6	133-1552	1	Cover-Crankcase
7	127-9493	1	Gasket-Cover, Crankcase
8	121-0054	2	Pin-Dowel
9	127-9494	1	Camshaft ASM
10	127-9495	1	Crankshaft
11	120-4320	1	Key-Woodruff
13	121-0030	2	Screw-HHF
14	121-0048	3	Washer-Plain
15	127-9104	1	Tube-Drain, Oil
16	121-0208	1	Seal-Oil

Governor Assembly

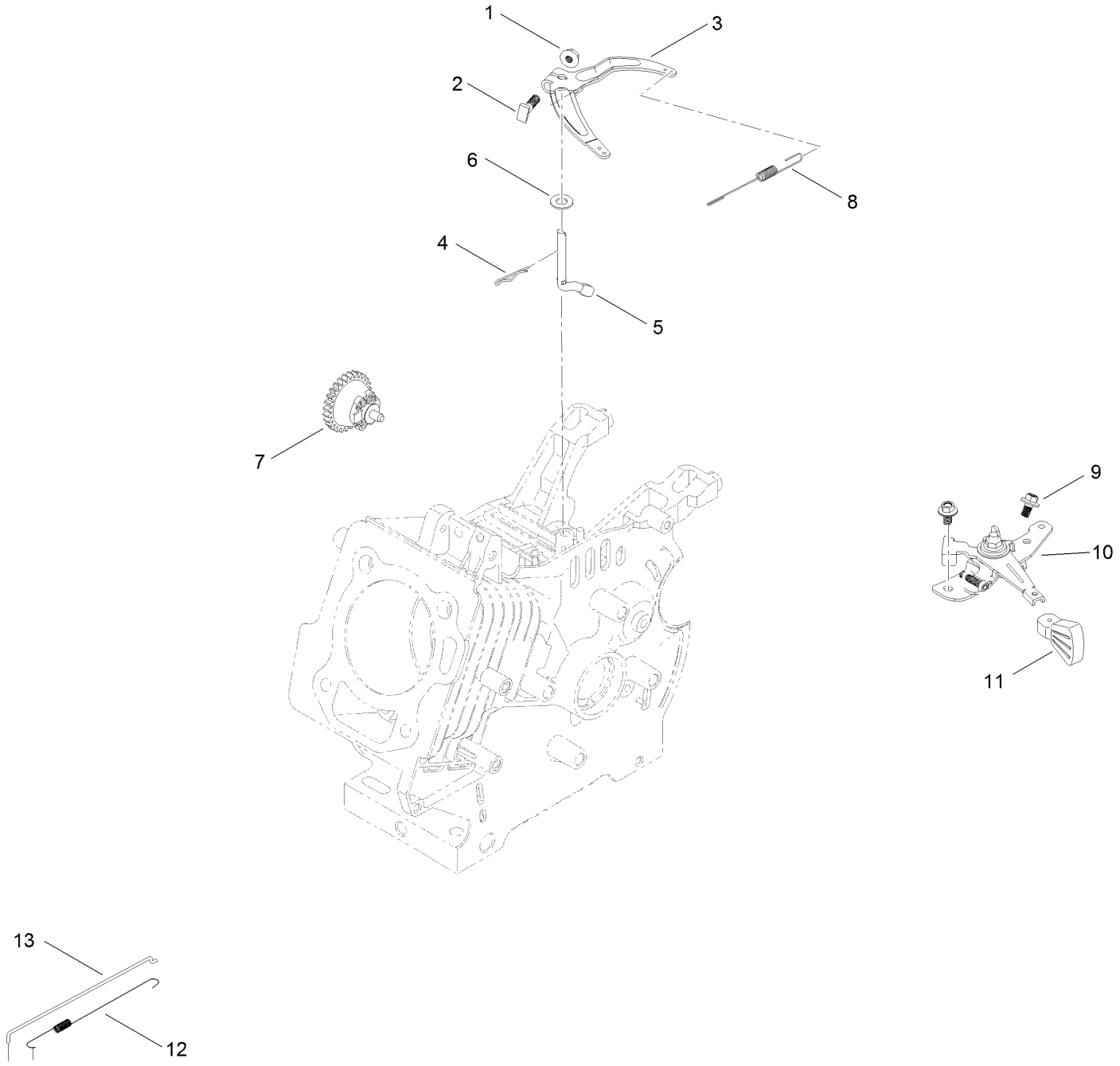

Governor Assembly (continued)

Ref.	Part Number	Qty.	Description
1	120-4236	1	Nut-Flange
2	120-4238	1	Bolt-Arm, Governor
3	127-9482	1	Arm-Governor
4	120-4256	1	Pin-Hair
5	133-1523	1	Shaft-Governor
6	121-0498	1	Washer-Plain
7	127-9101	1	Governor Gear ASM
8	127-9483	1	Spring-Governor
9	121-0116	2	Screw-HHF
10	133-1555	1	Throttle Control ASM
11	121-0269	1	Knob-Control, Throttle
12	133-1536	1	Spring-Return, Throttle
13	127-9488	1	Rod-Governor

Piston and Head Assembly

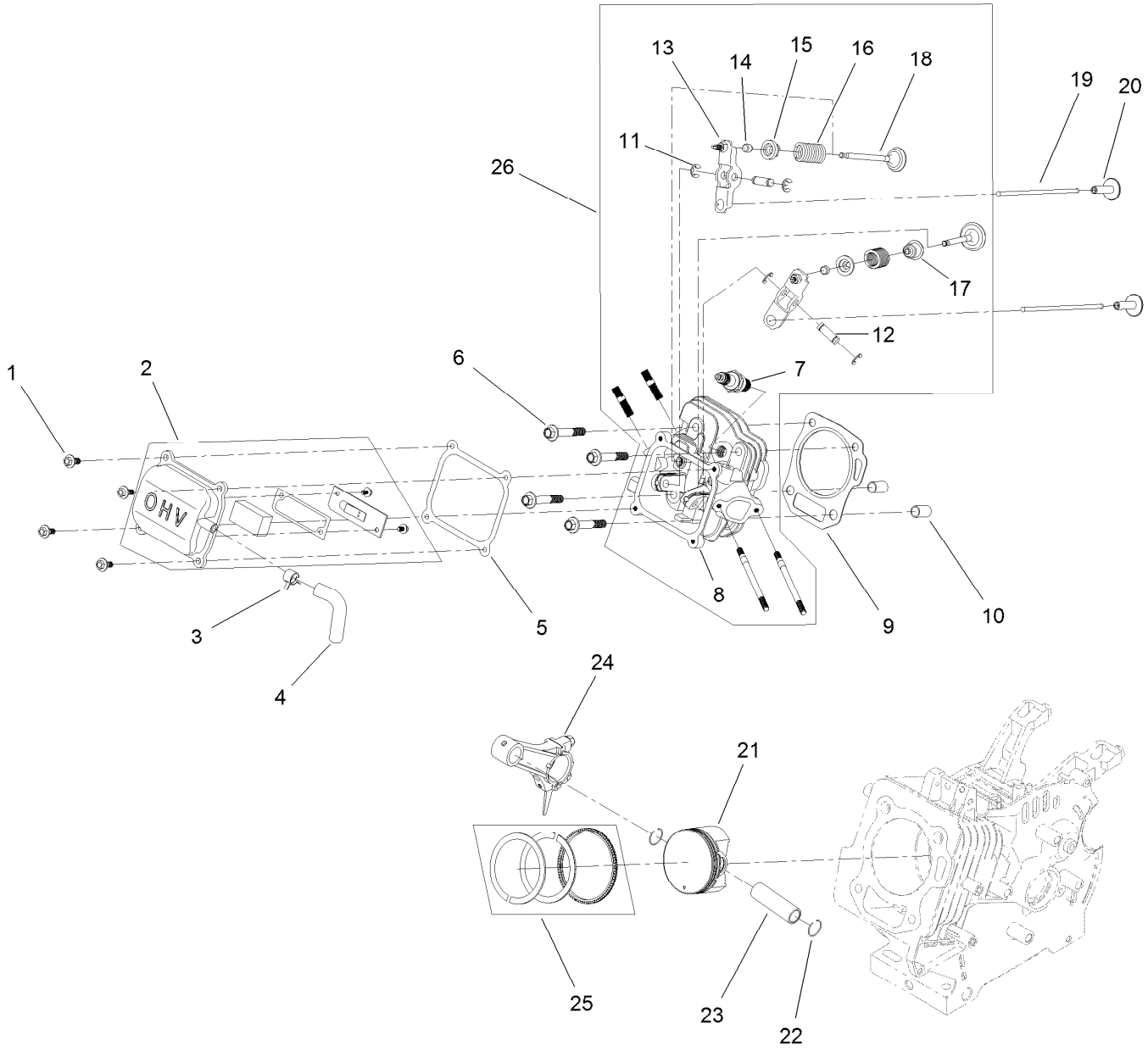

Piston and Head Assembly (continued)

Ref.	Part Number	Qty.	Description
1	120-4454	4	Screw-HHF
2	133-1500	1	Valve Cover ASM
3	133-1558	1	Clamp-Hose
4	133-1502	1	Tube-Breather
5	133-1507	1	Gasket-Cover, Valve
6	133-1508	4	Screw-Flange
7	81-3250	1	Spark Plug
8	133-1509	1	Head-Cylinder
9	133-1510	1	Gasket-Head
10	120-4200	2	Pin-Dowel
11	133-1511	4	E-Clip
12	133-1512	2	Pin-Arm, Rocker
13	133-1513	2	Rocker Arm ASM
14	121-4116	2	Rotator-Valve
15	121-4117	2	Retainer-Spring, Valve
16	127-9014	2	Spring-Valve
17	121-4202	1	Seal-Stem, Valve
18	133-1515	1	Set-Valve
19	133-1514	2	Rod-Push
20	127-9015	2	Tappet-Valve
21	133-1522	1	Piston
22	121-0313	2	Clip-Pin, Piston
23	121-4128	1	Pin-Piston
24	121-4123	1	Connecting Rod ASM
25	133-1521	1	Set-Ring, Piston
26	133-9867	1	Complete Head ASM

Blower Housing and Shrouds Assembly

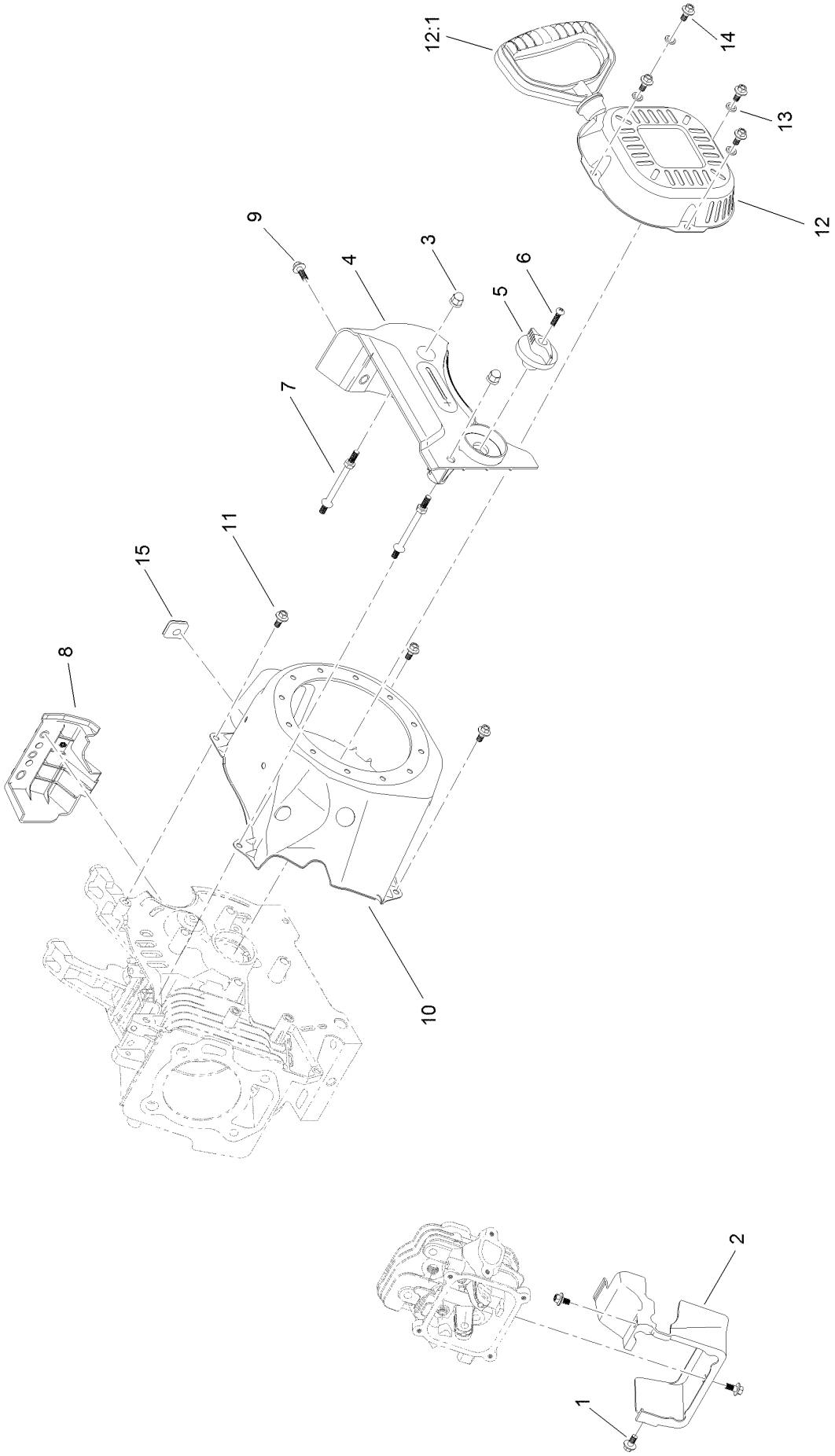

Blower Housing and Shrouds Assembly (continued)

Ref.	Part Number	Qty.	Description
1	121-0116	3	Screw-HHF
2	133-1530	1	Shroud-Head
3	127-9383	2	Nut-Acorn
4	133-1557	1	Panel-Control, Front
5	121-0268	1	Knob-Valve, Fuel
6	121-0305	1	Screw-Bhp
7	127-9110	2	Stud-Mount
8	133-1543	1	Panel-Side, Engine
9	127-9123	1	Screw-HHF
10	133-1528	1	Shroud-Flywheel
11	121-0294	3	Screw-HHF
12	127-9487	1	Recoil ASM
12:1	121-0287	1	Handle-Recoil
13	127-9380	4	Washer-Plain
14	127-9031	4	Screw-HHF
15	133-1548	1	Grommet-Rubber

Engine Decal Assembly

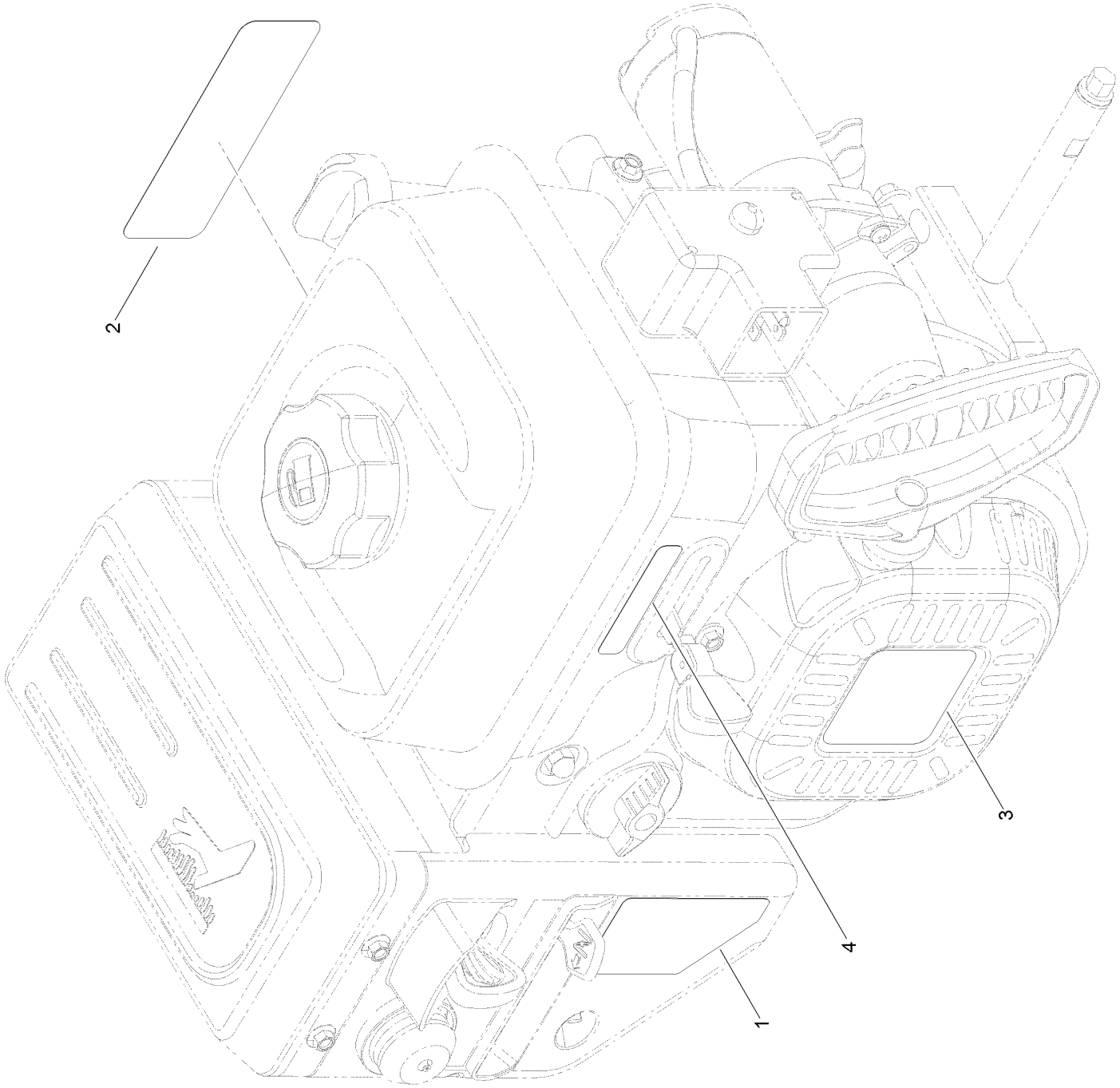

Engine Decal Assembly (continued)

Ref.	Part Number	Qty.	Description
1	120-9805	1	Decal-Control, Engine
2	131-5911	1	Decal-Engine Series, G250
3	131-5912	1	Decal-Recoil, G250
4	131-6487	1	Decal-Throttle

Chute Assembly

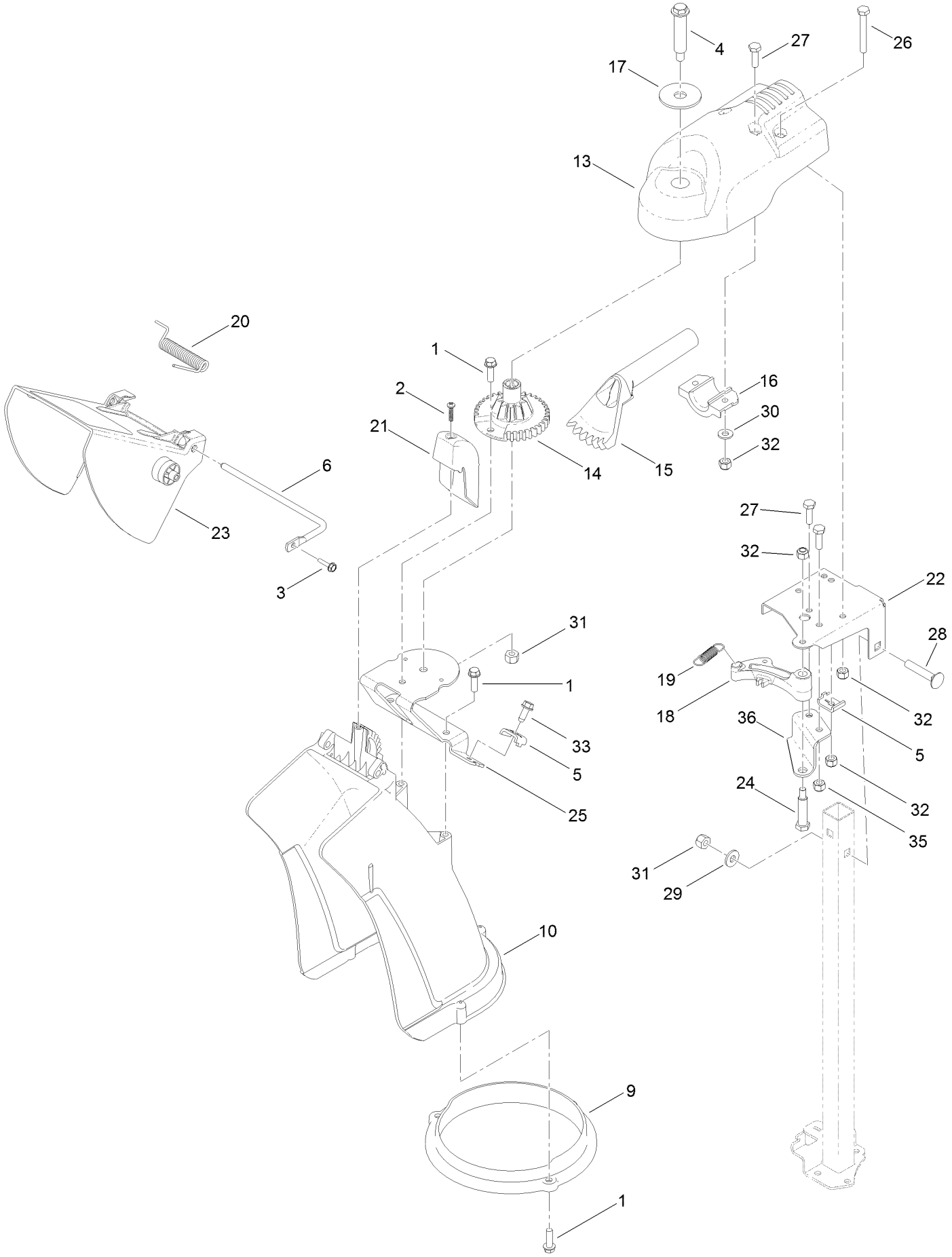

Chute Assembly (continued)

Ref.	Part Number	Qty.	Description
1	46-8091	6	Screw-HWH
2	94-4496	1	Screw-PPH
3	98-1375	1	Screw-HWH
4	100-9880	1	Bolt-Shoulder
5	106-7297	2	Clamp-Cable
6	121-6826	1	Rod-Deflector
9	119-7627	1	Ring-Chute
10	119-7628	1	Chute-Discharge
13	120-3852	1	Mount-Chute, Discharge
14	120-3853	1	Gear-Chute
15	120-3854	1	Gear-Bevel
16	120-3855	1	Mount-Gear, Bevel
17	120-3856	1	Washer-Flat
18	120-3869	1	Latch-Chute
19	120-7150	1	Spring-Latch, Chute
20	120-9298	1	Spring-Torsion

Ref.	Part Number	Qty.	Description
21	120-9299	1	Chute-Cover
22	121-1207-03	1	Bracket-Support, Chute
23	121-1215	1	Deflector-Chute
24	121-1229	1	Bolt-Shoulder
25	121-1237-03	1	Bracket-Mount, Chute
26	321-11	3	Screw-HH
27	321-5	4	Screw-HH
28	3230-5	2	Bolt-CARR
29	3256-2	2	Washer-Flat
30	3256-22	2	Washer-Flat
31	3296-29	3	Nut-Lock, NI
32	3296-42	5	Nut-Lock, NI
33	32144-10	1	Screw-HWH
35	3296-42	2	Nut-Lock, NI
36	121-6843	1	Bracket-Support, Latch

Quick Stick Assembly

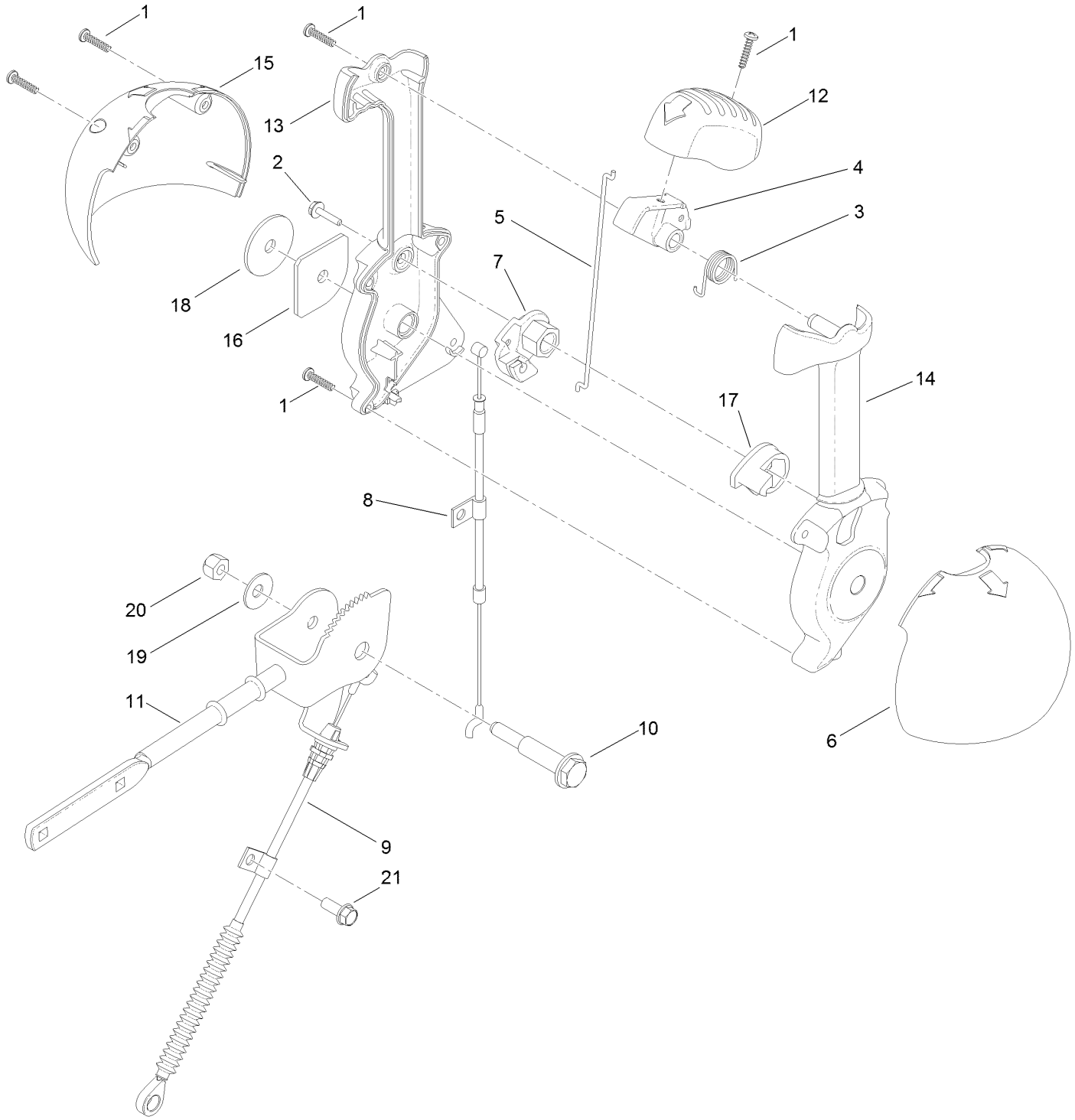

Quick Stick Assembly (continued)

Ref.	Part Number	Qty.	Description
1	94-4496	5	Screw-PPH
2	98-1375	1	Screw-HWH
3	105-9982	1	Spring-Torsion
4	105-9984	1	Trigger-Latch
5	105-9985	1	Link-Latch
6	105-9986	1	Cover-Lever, Chute (LH)
7	105-9988	1	Lever-Cable, Deflector
8	121-6815	1	Cable-Release, Chute
9	131-6471	1	Cable-Control, Deflector
10	105-9995	1	Screw-Shoulder
11	106-4479	1	Rod-Control, Chute
12	106-7280	1	Cap-Lever
13	106-7281	1	Lever-Control, Chute (RH)
14	106-7282	1	Lever-Control, Chute (LH)
15	106-7292	1	Cover-Lever, Chute (RH)
16	106-7295	1	Plate-Friction
17	106-7310	1	Pawl-Latch
18	107-3002	1	Washer-Nylon
19	3290-456	1	Washer-Belleville
20	3296-29	1	Nut-Lock, NI
21	32144-85	1	Screw-HWH

Handle Assembly

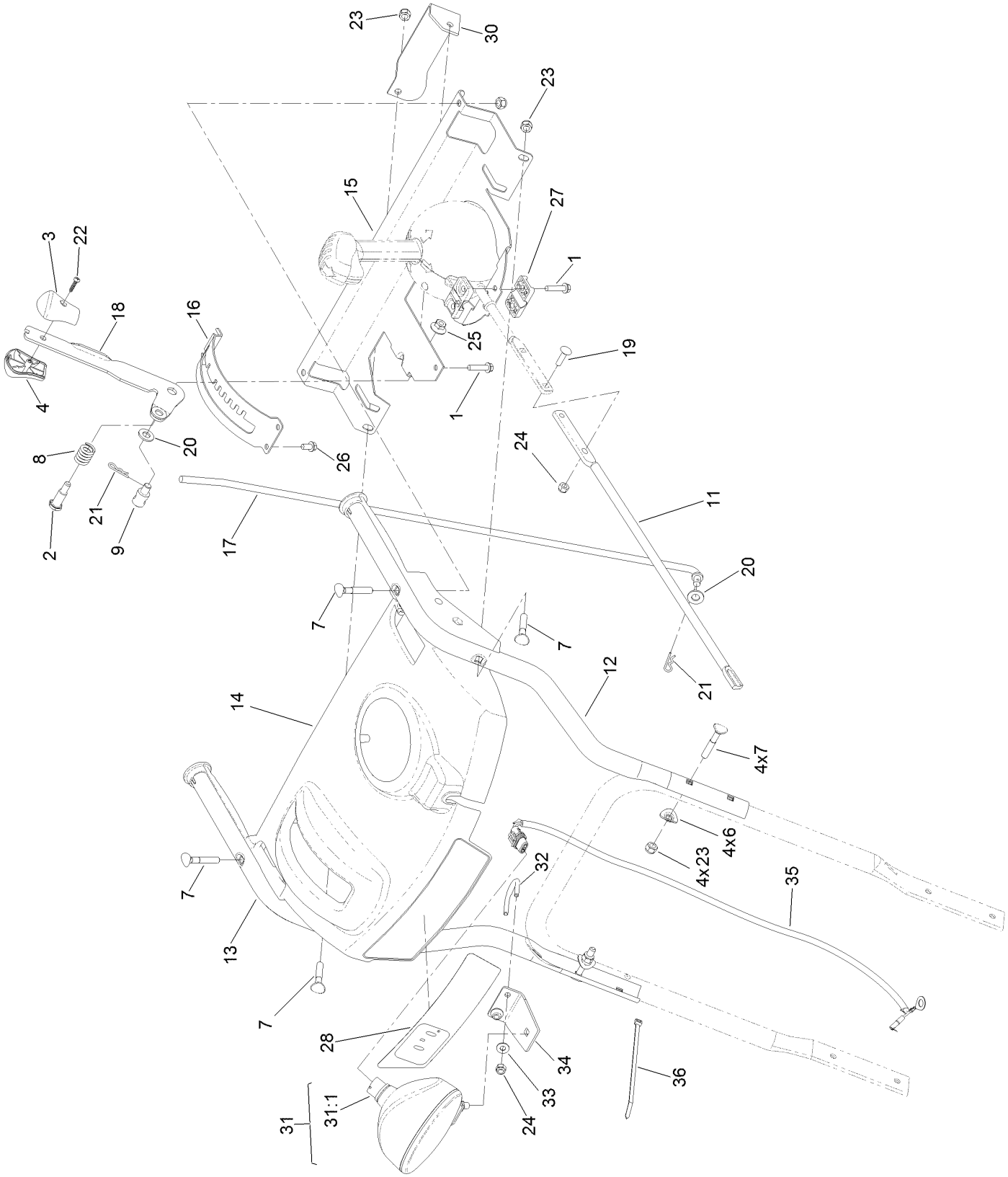

Handle Assembly (continued)

Ref.	Part Number	Qty.	Description
1	46-8092	3	Screw-Plastite
2	63-2650	1	Screw-Shoulder
3	105-9999	1	Knob-Shift, LH
4	106-4423	1	Knob-Shift, RH
6	107-3844	4	Washer
7	92-2260	8	Screw-Handle
8	108-7313	1	Spring-Compression
9	110-3446	1	Trunnion-Rod
11	120-3881	1	Rod-Chute, Front
12	120-7173-03	1	Handle-Upper, LH
13	120-7174-03	1	Handle-Upper, RH
14	120-7194	1	Panel-Control, Master
15	120-9251-03	1	Support-Panel, Control
16	120-9258-03	1	Mount-Selector, Speed
17	121-6829	1	Rod-Selector, Gear
18	121-1242-03	1	Selector-Speed
19	3229-30	2	Screw-CARR
20	3256-24	3	Washer-Flat
21	3290-307	2	Pin-Cotter
22	94-4496	1	Screw-PPH
23	3296-72	8	Nut-Lock, NI
24	3296-73	4	Nut-Lock, NI
25	32128-13	1	Nut-HF
26	46-8093	4	Screw-Plastite
27	105-9987	2	Support-Rod
28	131-6470	1	Decal-Panel, Control
30	120-2301-03	1	Plate-Support, Shift
31	120-3074	1	Headlamp ASM
31:1	120-3075	1	Lamp-12 Volt
32	107-3024	1	Clamp
33	3256-1	2	Washer-Flat
34	127-5961-03	1	Bracket-Light
35	130-9774	1	Harness-Wire
36	614249	1	Tie-Cable

Control Assembly

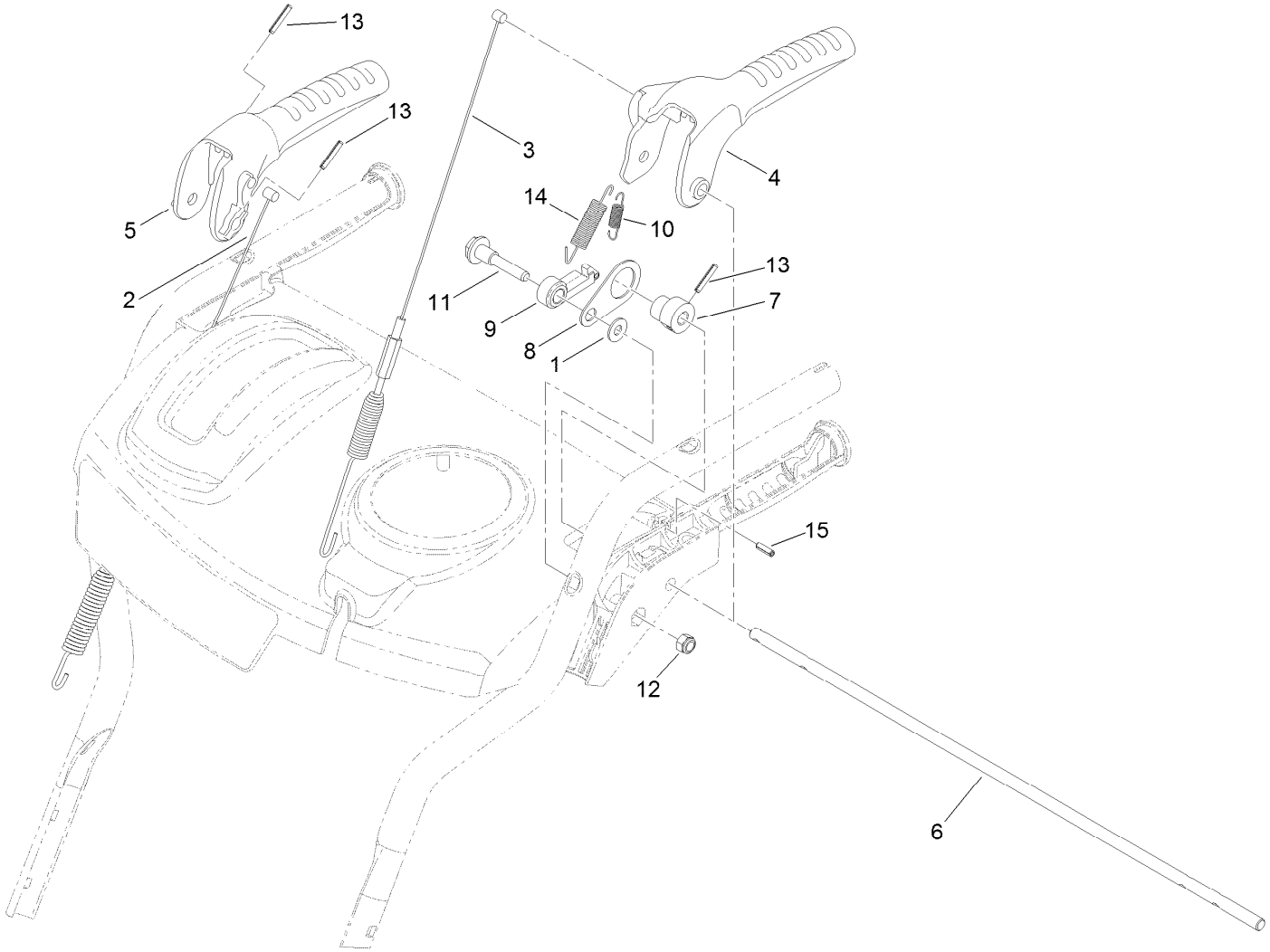

Control Assembly (continued)

Ref.	Part Number	Qty.	Description
1	98-3499	1	Washer-Flat
2	121-6812	1	Cable-Auger
3	121-6813	1	Cable-Traction
4	121-1200	1	Handle-Control, Traction
5	121-1201	1	Handle-Control, Auger
6	121-1202	1	Rod-Lockout
7	121-1203	1	Cam-Lockout
8	121-1204	1	Link-Lockout
9	121-1205	1	Latch-Lockout
10	121-1206	1	Spring-Lockout
11	121-1216	1	Screw-Shoulder
12	3296-72	1	Nut-Lock, NI
13	32121-125	3	Pin-Spring
14	121-1238	1	Spring-Return, Traction Lever
15	32121-2	1	Pin-Roll, Slotted

Attachments and Accessories

For 37781 Power Max 826 OXE Snowthrower

Product Name	Model/Part
Weight Kit	107-3815
Snow Cab Kit	127-5960
Engine Maintenance Kit	138-0708
Non-Marking Skid Kit	38211
Heavy-Duty Skid Kit	38212
Drift Breaker Kit	38213
Tire Chain Kit, Snowthrowers with 13in Tires	38214
Toro Snow Oil 0W30 Synthetic 20-Ounce Bottle	38913
Toro 2-Stage Cover	490-7466
Plain 2-Stage Cover	490-7467

Notes:

TORO®

Count on it.