Form No. 3423-432 Rev B

TORO®

Count on it.

Parts Catalog

# Power Max® 826 OXE

## Snowthrower

**Model No. 38819—Serial No. 400000000 and Up**

Register at www.Toro.com.
Original Instructions (EN)

CE

*3423-432* B

# Ordering Replacement Parts

To order replacement parts, please supply the part number, the quantity, and the description of each part desired.

### Understanding Reference Numbers

Each identified part in an illustration has a reference number. The reference number for a part also appears in the parts list, along with other information about the part.

This catalog uses two special reference number formats, one to indicate parts in a service assembly and another to indicate the quantity of a given part in an illustration.

### Service Assembly Reference Numbers

Parts in service assemblies have reference numbers in the form a:b. The a represents the reference number of the entire service assembly and the b represents a sequential number unique to each part within the service assembly.

For example, a wheel assembly might be identified by reference number 6, the tire by 6:1, the valve by 6:2, and the wheel by 6:3. When you order the assembly identified by reference number 6, you receive all parts identified by reference numbers 6:1,6:2, and 6:3. However, you may also order any part individually. Reference numbers of this type appear in illustration and in parts lists.

### Reference Numbers Indicating Quantity

In an illustration, if a reference number indicates more than one part, the reference number has the form nX y. The n represents the quantity of the part, the X is the multiplication symbol, and the y represents the reference number.

For example, in an illustration, the reference number 2X 37 means that two of the parts identified by reference number 37 are indicated.

# Contents

Main Frame and Auger Housing Assembly . . . . . 4
Pulley and Bellcrank Assembly . . . . . 6
Impeller Drive Assembly . . . . . 8
Drive Assembly . . . . . 10
Tire and Drive Assembly . . . . . 12
Gearbox, Auger and Impeller Assembly . . . . . 14
26 Inch Auger Gearcase Assembly No. 119-7641 . . . . . 16
Impeller Assembly . . . . . 18
Engine Assembly . . . . . 20
Engine Decal Assembly . . . . . 22
Fuel System and Carburetor Assembly . . . . . 24
Intake and Exhaust Assembly . . . . . 26
Ignition and Electrical Assembly . . . . . 28
Crankcase Assembly . . . . . 30
Governor Assembly . . . . . 32
Piston and Head Assembly . . . . . 34
Blower Housing and Shrouds Assembly . . . . . 36
Chute Assembly . . . . . 38
Lever Chute Control Assembly . . . . . 40
Handle Assembly . . . . . 42
Control Assembly . . . . . 44
Attachments and Accessories . . . . . 46

**© 2019—The Toro® Company**
**8111 Lyndale Avenue South**
**Bloomington, MN 55420**



**Contact us at www.Toro.com.**
**Printed in the USA.**
**All Rights Reserved**

# Main Frame and Auger Housing Assembly

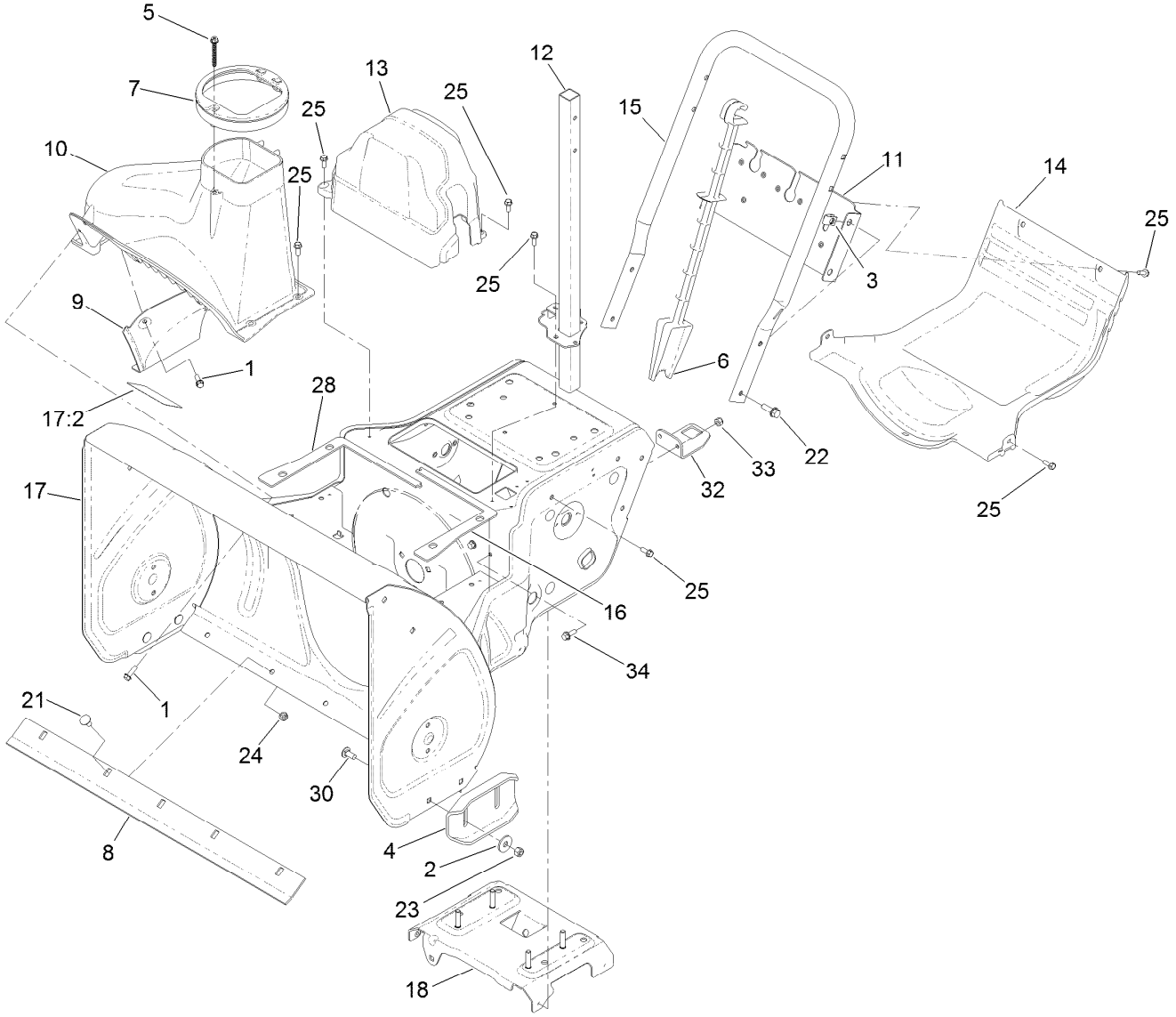

# Main Frame and Auger Housing Assembly (continued)

| Ref. | Part Number | Qty. | Description |
|---|---|---|---|
| 1 | 137-3099 | 6 | Screw-Plastite, HWH |
| 2 | 119-4150 | 4 | Washer-Flat |
| 3 | 94-2413 | 4 | Nut-U |
| 4 | 106-4588-01 | 2 | Skid |
| 5 | 137-3015 | 1 | Screw-HWH, Plastite |
| 6 | 121-6833 | 1 | Stick-Cleanout |
| 7 | 138-3608 | 1 | Guide-Chute |
| 8 | 120-3872-01 | 1 | Scraper-26 Inch |
| 9 | 120-7158-01 | 1 | Cover-Liner |
| 10 | 120-7159 | 1 | Cover |
| 11 | 120-7161-01 | 1 | Brace-Frame |
| 12 | 137-3412-03 | 1 | Support-Chute |
| 13 | 120-7177 | 1 | Cover-Belt |
| 14 | 120-7178 | 1 | Cover-Lower |
| 15 | 120-7179-03 | 1 | Handle-Lower |
| 16 | 120-7181 | 1 | Seal-Housing, LH |
| 17 | 131-6469 | 1 | Frame ASM |
| 17:2 | 121-6817 | 1 | Decal-Danger, Auger |
| 18 | 136-7187 | 1 | Brace-Frame |
| 21 | 137-3060 | 5 | Bolt-CARR |
| 22 | 137-3067 | 4 | Screw-HHF |
| 23 | 119-4038 | 4 | Nut-Hex |
| 24 | 137-3089 | 5 | Nut-Hex |
| 25 | 32144-85 | 17 | Screw-HWH |
| 28 | 121-6841 | 1 | Seal-Housing, RH |
| 30 | 137-3061 | 4 | Bolt-CARR |
| 32 | 137-3410-03 | 1 | Bracket-Post, Chute |
| 33 | 120-9678 | 2 | Screw-HHF |
| 34 | 137-3094 | 2 | Nut-Hex |

# Pulley and Bellcrank Assembly

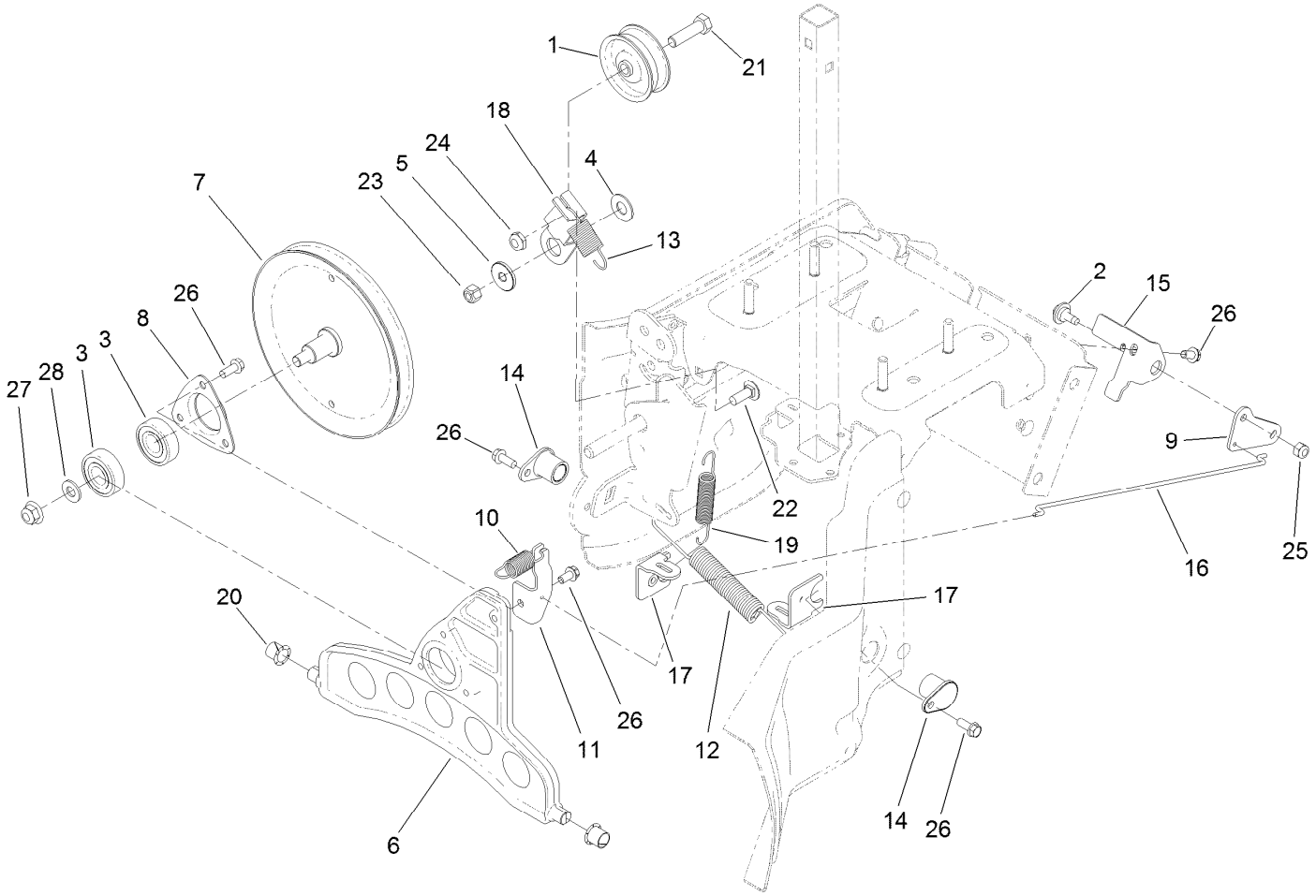

# Pulley and Bellcrank Assembly (continued)

| Ref. | Part Number | Qty. | Description |
|---|---|---|---|
| 1 | 3-4244 | 1 | Pulley-Idler |
| 2 | 92-9698 | 1 | Screw-Shoulder |
| 3 | 38-7820 | 2 | Bearing-Ball |
| 4 | 25-5640 | 1 | Washer |
| 5 | 117-7711 | 1 | Bushing-Idler |
| 6 | 119-7645 | 1 | Plate-Wheel, Friction |
| 7 | 136-7152 | 1 | Traction Pulley ASM |
| 8 | 136-7124 | 1 | Retainer-Bearing |
| 9 | 119-7670-03 | 1 | Bellcrank-Drive |
| 10 | 136-7153 | 1 | Spring-Extension |
| 11 | 119-7679 | 1 | Bracket-Plate, Traction |
| 12 | 120-3883 | 1 | Spring-Extension |
| 13 | 137-3435 | 1 | Spring-Extension |
| 14 | 120-7156 | 2 | Bushing-Plate, Traction |
| 15 | 120-7165-03 | 1 | Bracket-Bellcrank |
| 16 | 136-7155 | 1 | Link-Drive |
| 17 | 120-9271 | 2 | Bracket-Anchor, Spring |
| 18 | 136-7159 | 1 | Arm-Idler, Traction |
| 19 | 120-9275 | 1 | Spring-Extension |
| 20 | 256-257 | 2 | Bushing-Nyliner |
| 21 | 137-3065 | 1 | Screw-HH |
| 22 | 137-3058 | 1 | Bolt-CARR |
| 23 | 119-4038 | 1 | Nut-Hex |
| 24 | 121-4600 | 1 | Nut-Hex |
| 25 | 137-3094 | 1 | Nut-Hex |
| 26 | 32144-85 | 7 | Screw-HWH |
| 27 | 119-4042 | 1 | Nut-HF, NI |
| 28 | 115-1166 | 1 | Washer-Flat |

# Impeller Drive Assembly

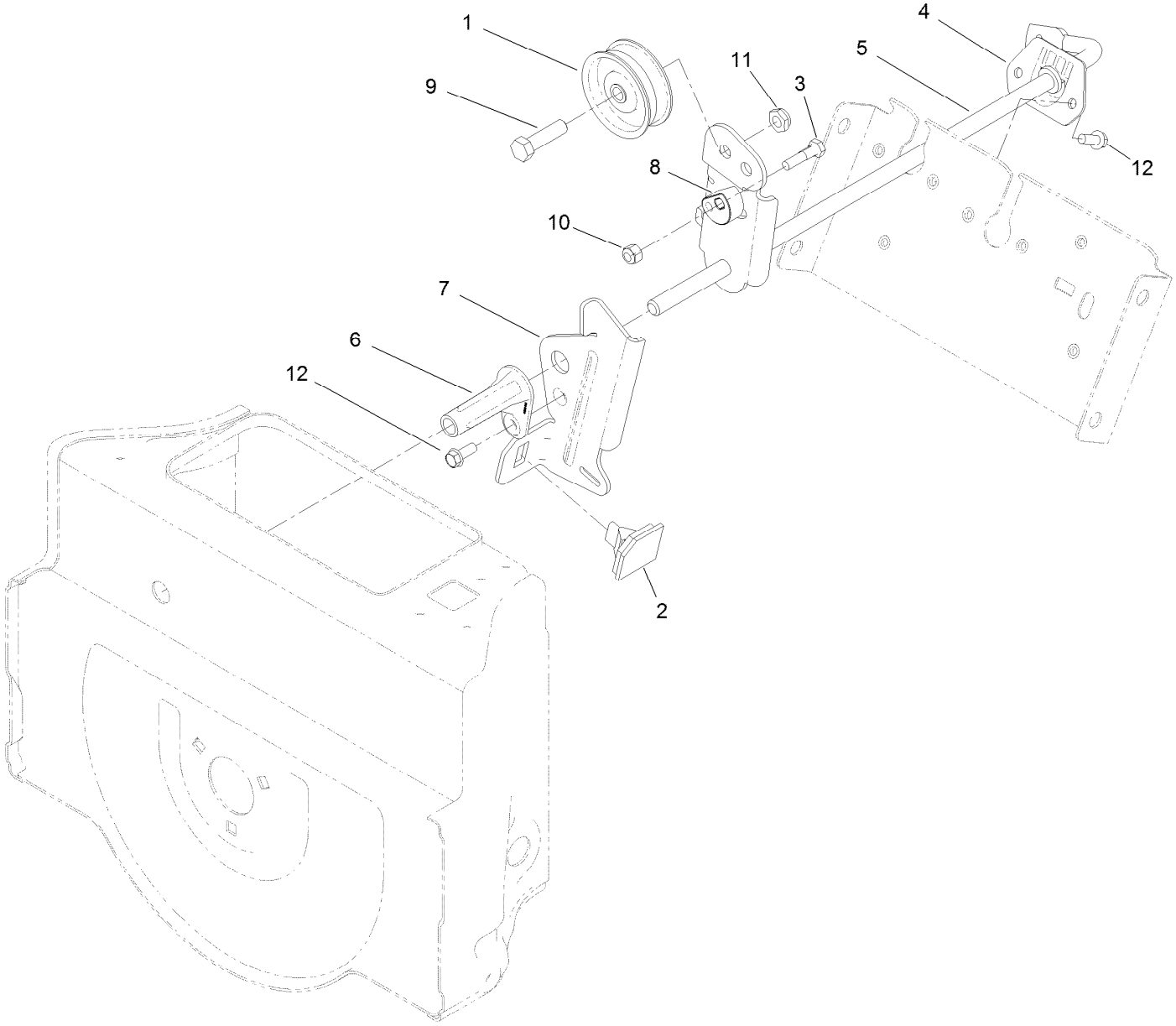

# Impeller Drive Assembly (continued)

| Ref. | Part Number | Qty. | Description |
|---|---|---|---|
| 1 | 3-4244 | 1 | Pulley-Idler |
| 2 | 66-8060 | 1 | Pad-Brake |
| 3 | 136-8674 | 1 | Bolt-Pivot, Eccentric |
| 4 | 120-7167 | 1 | Bushing-Rod, Clutch |
| 5 | 120-9254-03 | 1 | Impeller Clutch ASM |
| 6 | 120-9256 | 1 | Pivot-Brake, Impeller |
| 7 | 120-9257-03 | 1 | Arm-Brake, Impeller |
| 8 | 120-9276 | 1 | Eccentric-Brake, Impeller |
| 9 | 137-3065 | 1 | Screw-HH |
| 10 | 137-3088 | 1 | Nut-Hex |
| 11 | 121-4600 | 1 | Nut-Hex |
| 12 | 32144-85 | 3 | Screw-HWH |

# Drive Assembly

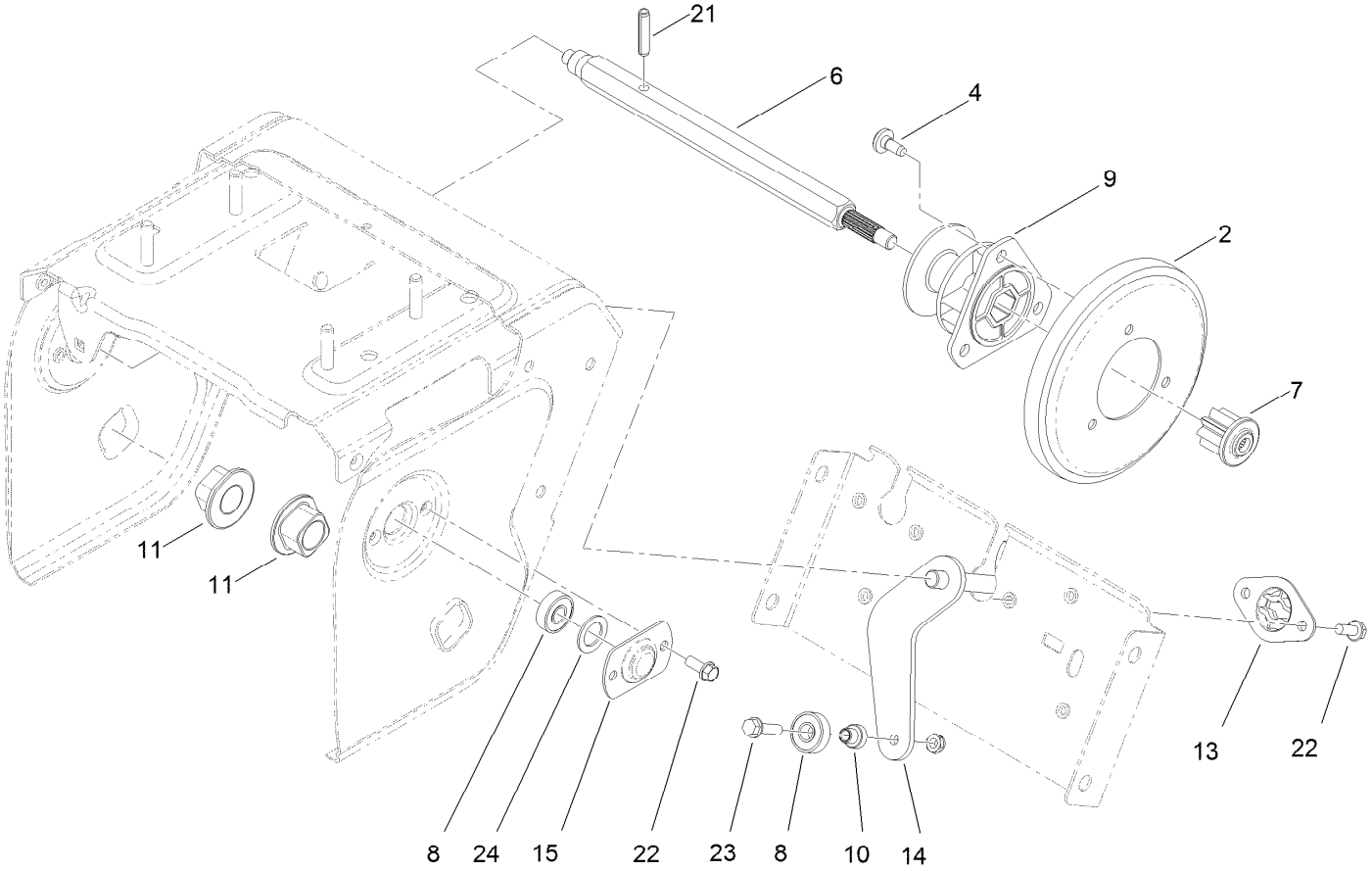

# Drive Assembly (continued)

| Ref. | Part Number | Qty. | Description |
|---|---|---|---|
| 2 | 119-1567 | 1 | Wheel-Friction |
| 4 | 120-7950 | 3 | Screw-Torx Shldr Self TAP |
| 6 | 119-7615 | 1 | Shaft-Hex |
| 7 | 119-7616 | 1 | Gear-Pinion, 8 Tooth |
| 8 | 121-6835 | 3 | Bearing-Ball |
| 9 | 119-7630 | 1 | Trunnion |
| 10 | 119-7684 | 1 | Spacer-Plate, Shift |
| 11 | 120-7162 | 2 | Bushing-Axle |

| Ref. | Part Number | Qty. | Description |
|---|---|---|---|
| 13 | 120-7191 | 1 | Retainer-Plate, Shift |
| 14 | 120-7193-03 | 1 | Shift Plate ASM |
| 15 | 136-7158 | 2 | Retainer-Bearing |
| 21 | 32121-9 | 1 | Pin-Roll, Slotted |
| 22 | 32144-85 | 6 | Screw-HWH |
| 23 | 32144-86 | 1 | Screw-HWHTF |
| 24 | 121-6840 | 2 | Washer-Rubber |

# Tire and Drive Assembly

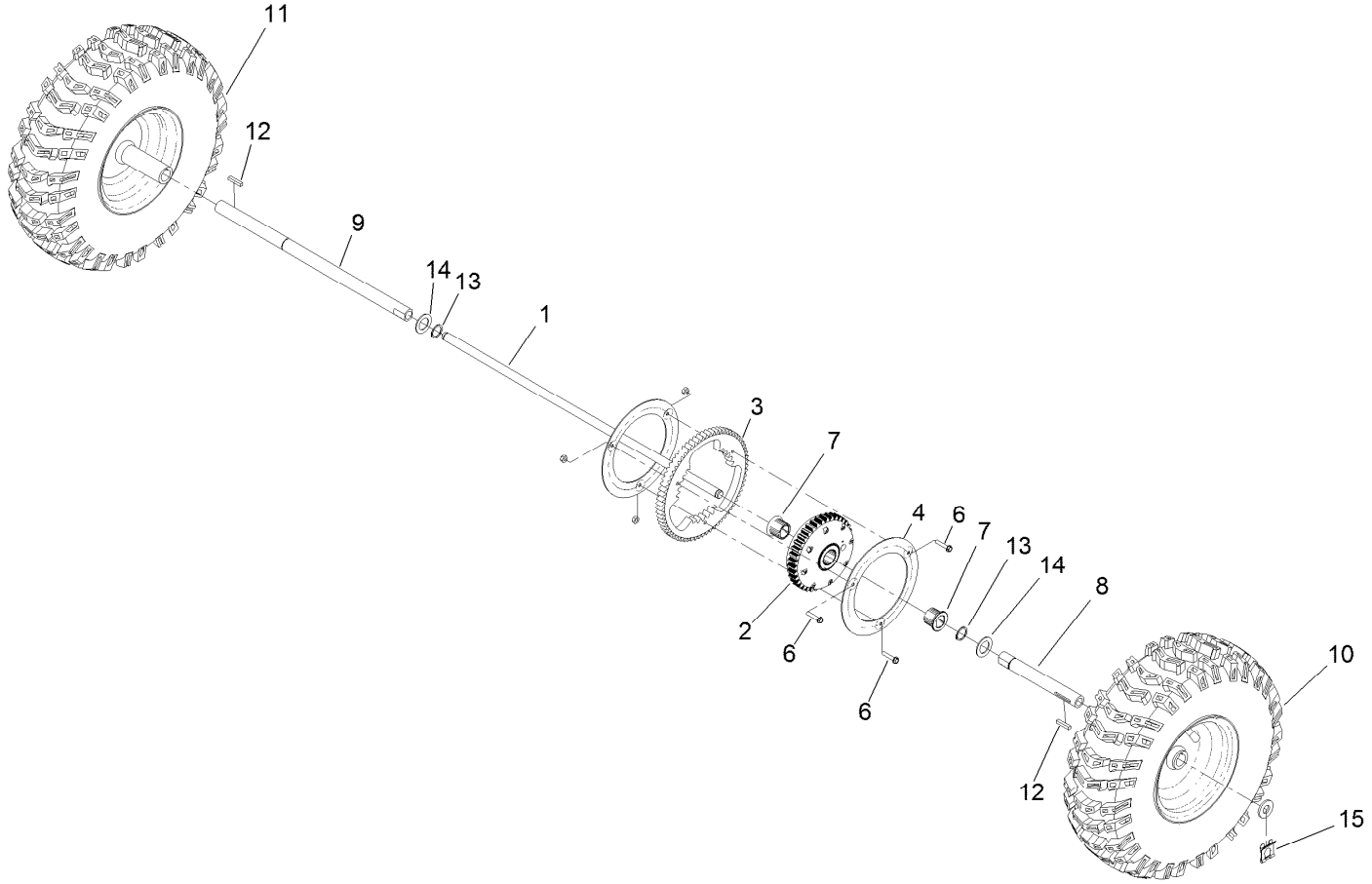

# Tire and Drive Assembly (continued)

| Ref. | Part Number | Qty. | Description |
|---|---|---|---|
| 1 | 130-9789 | 1 | Axle |
| 2 | 130-9776 | 1 | Transmission |
| 3 | 130-9786 | 1 | Gear-Axle |
| 4 | 130-9798-03 | 2 | Plate-Gear |
| 6 | 131-6456 | 3 | Screw-HWH |
| 7 | 130-9799 | 2 | Gear-Tube, Axle |
| 8 | 130-9792 | 1 | Tube-Axle |
| 9 | 130-9793 | 1 | Tube-Axle |
| 10 | 137-3437 | 1 | LH Wheel And Tire ASM |
| 11 | 137-3438 | 1 | RH Wheel And Tire ASM |
| 12 | 5-1077 | 2 | Key-Square |
| 13 | 32120-72 | 2 | Ring-Snap |
| 14 | 3-8664 | 2 | Washer-Thrust |
| 15 | 138-8491 | 2 | Clip-Pin |

# Gearbox, Auger and Impeller Assembly

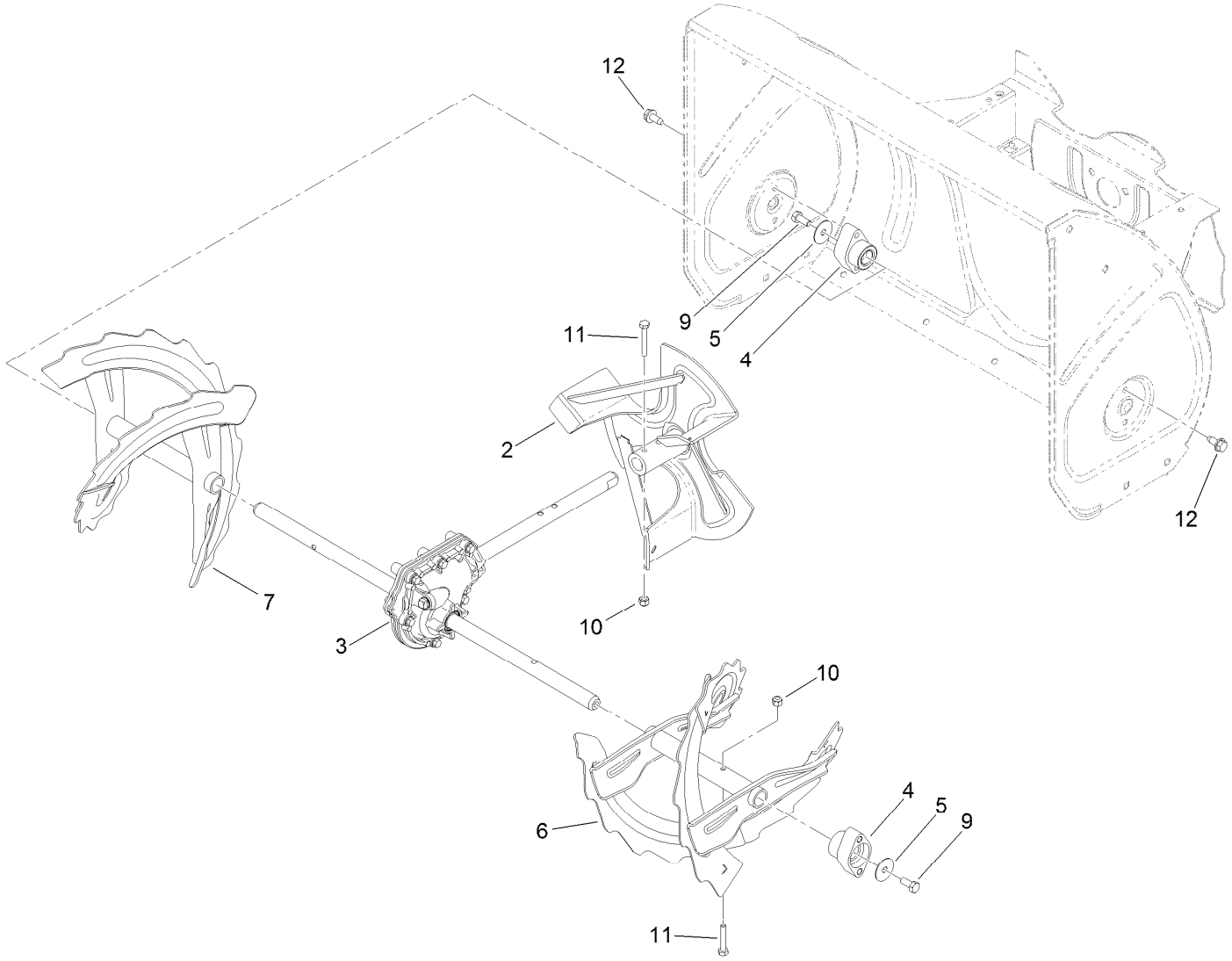

# Gearbox, Auger and Impeller Assembly (continued)

| Ref. | Part Number | Qty. | Description |
|---|---|---|---|
| 2 | 119-7612-03 | 1 | Impeller ASM |
| 3 | 119-7641 | 1 | Gearcase ASM |
| 4 | 120-3860 | 2 | Bearing-Auger |
| 5 | 120-3862 | 2 | Washer-Thrust |
| 6 | 120-9287-03 | 1 | LH Auger ASM |
| 7 | 120-9290-03 | 1 | RH Auger ASM |
| 9 | 137-3052 | 2 | Screw-HH |
| 10 | 137-3088 | 4 | Nut-Hex |
| 11 | 05010 | 4 | Bolt |
| 12 | 32144-70 | 4 | Screw-HWHTF |

# 26 Inch Auger Gearcase Assembly No. 119-7641

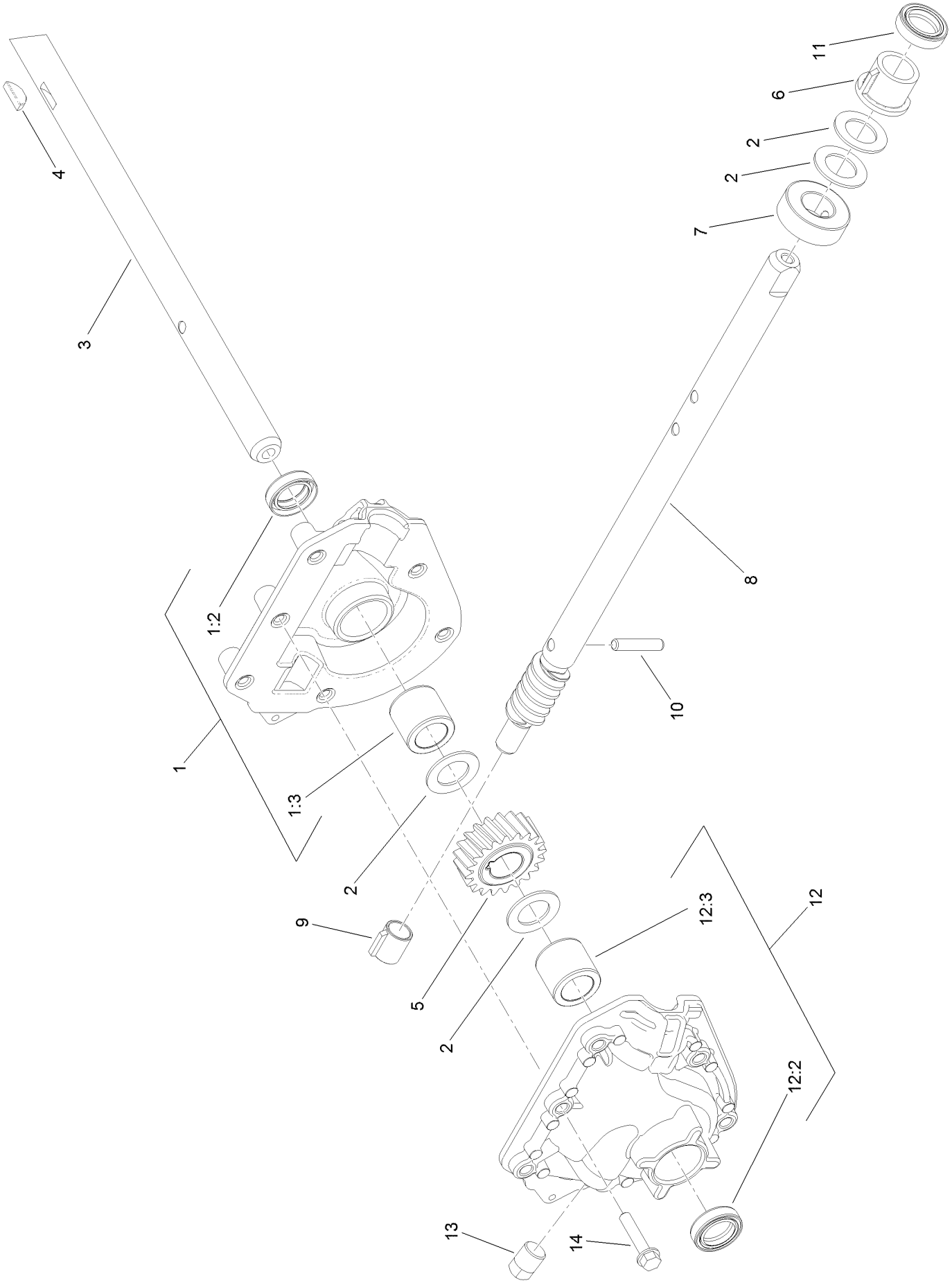

# 26 Inch Auger Gearcase Assembly No. 119-7641 (continued)

| Ref. | Part Number | Qty. | Description |
|---|---|---|---|
| 1 | 121-1209 | 1 | RH Auger Gearcase ASM |
| 1:2 | 121-6634 | 1 | Seal-Shaft |
| 1:3 | 120-9269 | 1 | Bushing-Sleeve |
| 2 | 119-7640 | 4 | Washer-Thrust |
| 3 | 119-7639 | 1 | Shaft-Output, Auger |
| 4 | 3257-5 | 1 | Key-Woodruff |
| 5 | 119-1576 | 1 | Gear-Helical, 20 Tooth |
| 6 | 119-7635 | 1 | Bushing-Input |
| 7 | 119-7636 | 1 | Collar-Thrust |
| 8 | 121-1234 | 1 | Shaft-Impeller, Rolled |
| 9 | 62-1150 | 1 | Bushing-Worm |
| 10 | 107-8899 | 1 | Pin-Dowel |
| 11 | 121-6634 | 1 | Seal-Shaft |
| 12 | 121-1210 | 1 | LH Auger Gearcase ASM |
| 12:2 | 121-6634 | 1 | Seal-Shaft |
| 12:3 | 120-9269 | 1 | Bushing-Sleeve |
| 13 | 121-6832 | 1 | Plug-Pipe, SQH |
| 14 | 108-4862 | 6 | Screw-HWH Thd Roll |

# Impeller Assembly

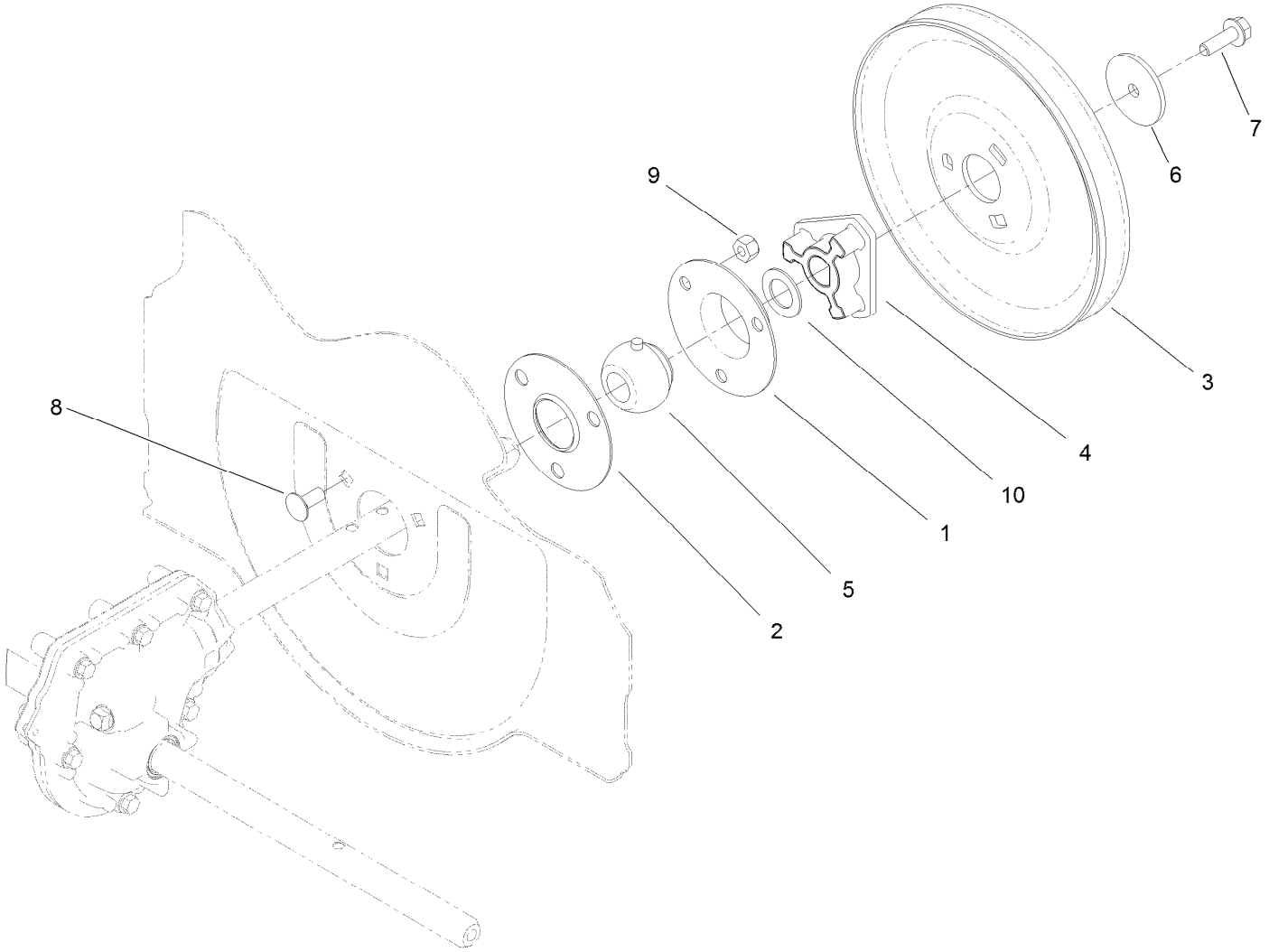

# Impeller Assembly (continued)

| Ref. | Part Number | Qty. | Description |
|---|---|---|---|
| 1 | 26-6110 | 1 | Flange-Cup, Bearing |
| 2 | 26-6120 | 1 | Flange-Cup, Bearing |
| 3 | 136-7157 | 1 | Pulley-Impeller |
| 4 | 120-9264 | 1 | Hub-Impeller, Pulley |
| 5 | 120-9272 | 1 | Bearing |
| 6 | 137-3121 | 1 | Washer-Plain |
| 7 | 115-5142 | 1 | Screw-HHF |
| 8 | 137-3061 | 3 | Bolt-CARR |
| 9 | 119-4038 | 3 | Nut-Hex |
| 10 | 119-7640 | 1 | Washer-Thrust |

# Engine Assembly

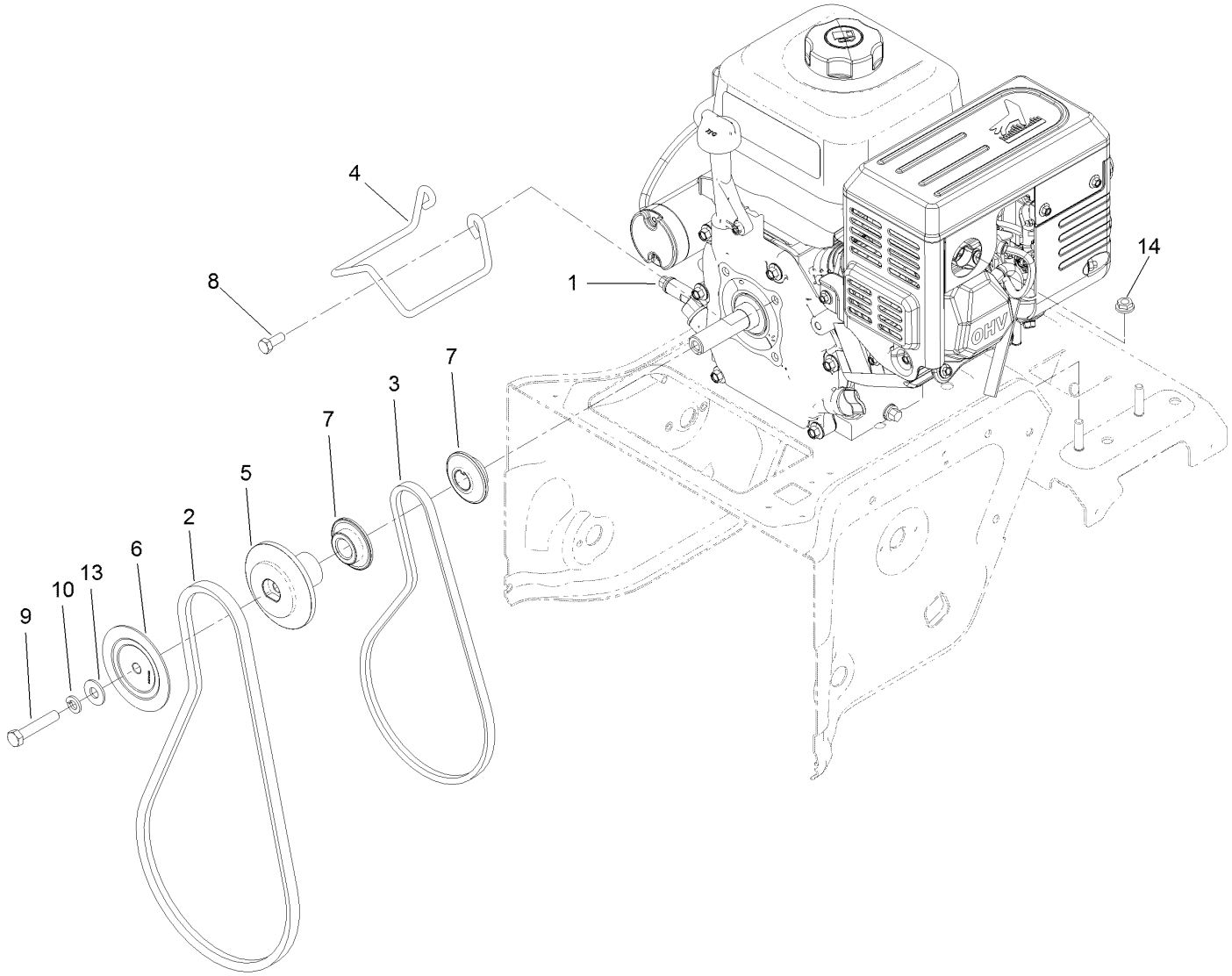

# Engine Assembly (continued)

| Ref. | Part Number | Qty. | Description |
|---|---|---|---|
| 1 | 136-7757 | 1 | Engine-G250Fds-1 |
| 2 | 120-3892 | 1 | Belt-V |
| 3 | 120-3893 | 1 | Belt-V |
| 4 | 136-7156 | 1 | Guide-Belt |
| 5 | 120-9283 | 1 | Pulley-Auger, Rear |
| 6 | 120-9284 | 1 | Pulley-Auger, Front |
| 7 | 137-3400 | 2 | Pulley-Engine, Traction |
| 8 | 138-0690 | 2 | Screw-HH |
| 9 | 120-2302 | 1 | Screw-HH |
| 10 | 3253-21 | 1 | Washer-Lock |
| 13 | 137-3078 | 1 | Washer-Plain |
| 14 | 137-3039 | 4 | Nut-HF |

# Engine Decal Assembly

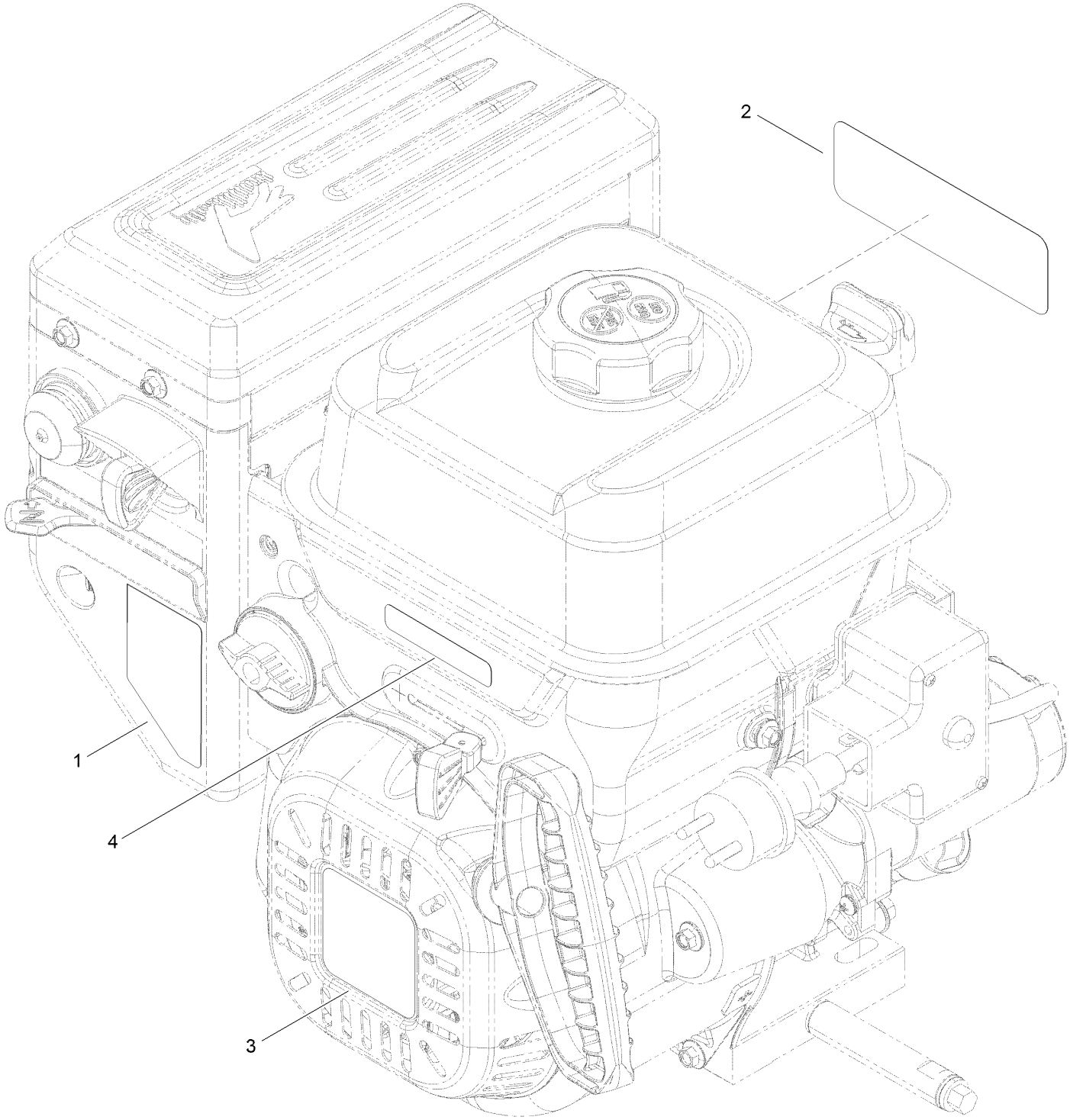

# Engine Decal Assembly (continued)

| Ref. | Part Number | Qty. | Description |
|---|---|---|---|
| 1 | 120-9805 | 1 | Decal-Control, Engine |
| 2 | 131-5911 | 1 | Decal-Engine Series, G250 |
| 3 | 131-5912 | 1 | Decal-Recoil, G250 |
| 4 | 131-6487 | 1 | Decal-Throttle |

# Fuel System and Carburetor Assembly

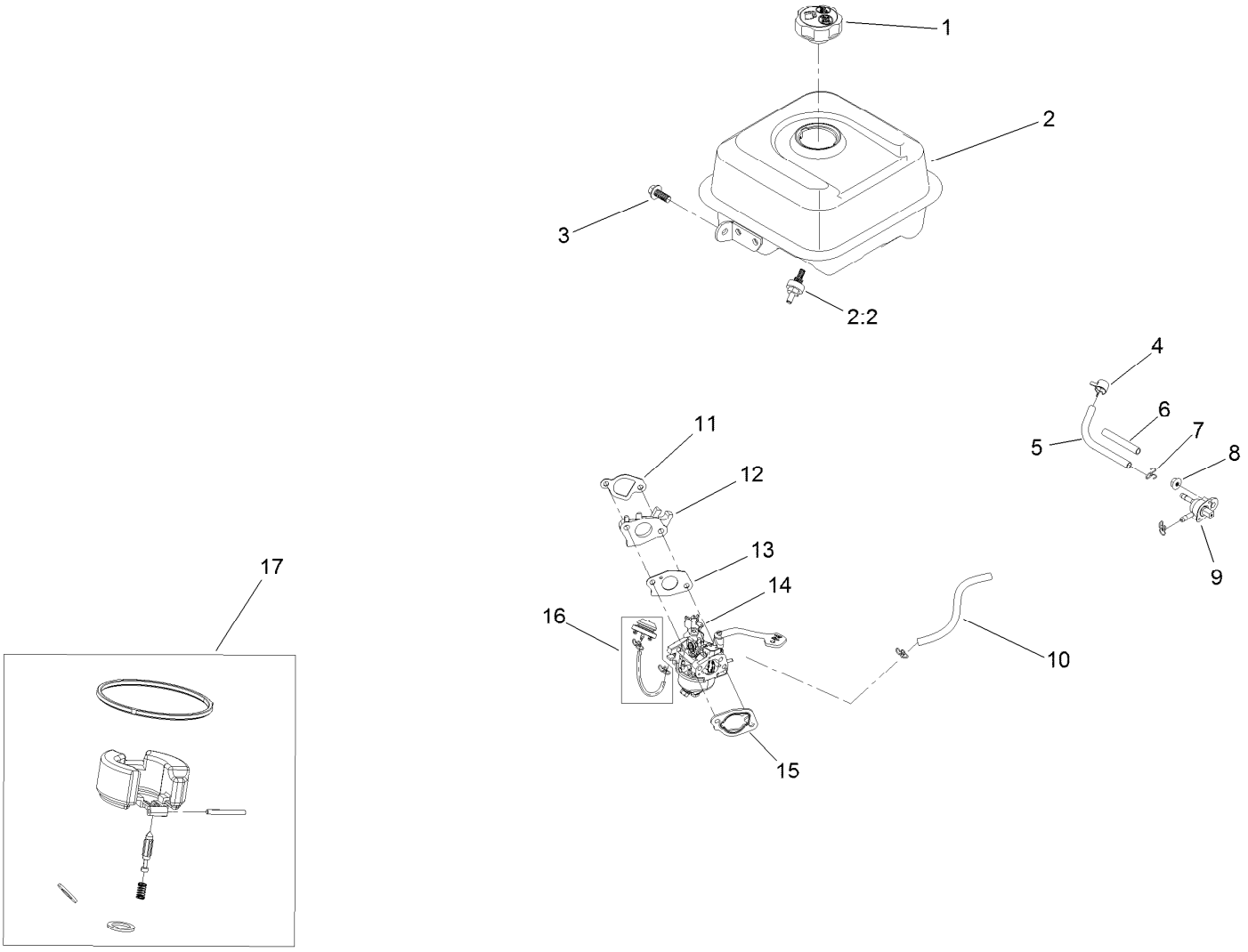

# Fuel System and Carburetor Assembly (continued)

| Ref. | Part Number | Qty. | Description |
|---|---|---|---|
| 1 | 133-9823 | 1 | Cap-Fuel |
| 2 | 133-1553 | 1 | Fuel Tank And Filter ASM |
| 2:2 | 127-9065 | 1 | Filter-Fuel |
| 3 | 121-0294 | 1 | Screw-HHF |
| 4 | 127-9120 | 1 | Clamp-Hose |
| 5 | 133-1556 | 1 | Hose-Fuel |
| 6 | 133-9997 | 1 | Sleeve-Abrasion |
| 7 | 121-0087 | 3 | Clamp-Hose |
| 8 | 120-4236 | 1 | Nut-Flange |
| 9 | 127-9117 | 1 | Valve-Fuel |
| 10 | 127-9489 | 1 | Hose-Fuel |
| 11 | 133-1531 | 1 | Gasket-Carburetor |
| 12 | 133-1532 | 1 | Insulator-Carburetor |
| 13 | 133-1533 | 1 | Gasket-Carburetor |
| 14 | 133-1534 | 1 | Carburetor ASM |
| 15 | 121-0080 | 1 | Gasket-Carburetor |
| 16 | 127-9079 | 1 | Primer Kit |
| 17 | 127-9395 | 1 | Internal Carb Service Kit |
| 99 | 133-9937 | 1 | High Altitude Kit ● |

● Not illustrated

# Intake and Exhaust Assembly

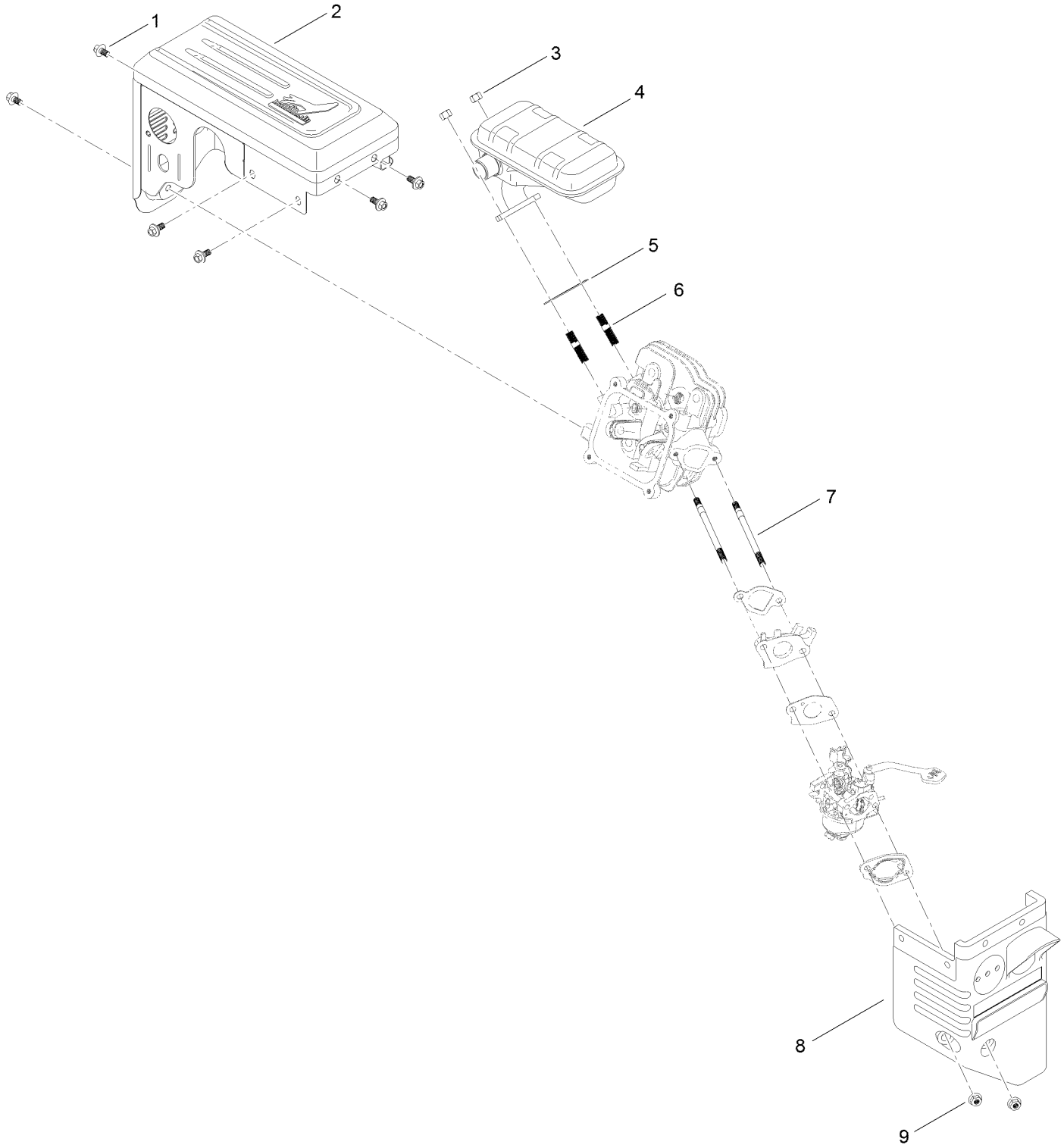

# Intake and Exhaust Assembly (continued)

| Ref. | Part Number | Qty. | Description |
|---|---|---|---|
| 1 | 121-0294 | 6 | Screw-HHF |
| 2 | 127-9491 | 1 | Muffler Cover ASM |
| 3 | 121-0199 | 2 | Nut-HH |
| 4 | 127-9490 | 1 | Muffler ASM |
| 5 | 133-1539 | 1 | Gasket-Exhaust |
| 6 | 121-0464 | 2 | Stud-Exhaust |
| 7 | 121-4112 | 2 | Stud-Intake |
| 8 | 127-9112 | 1 | Box-Heater |
| 9 | 121-0308 | 2 | Nut-Flange |

# Ignition and Electrical Assembly

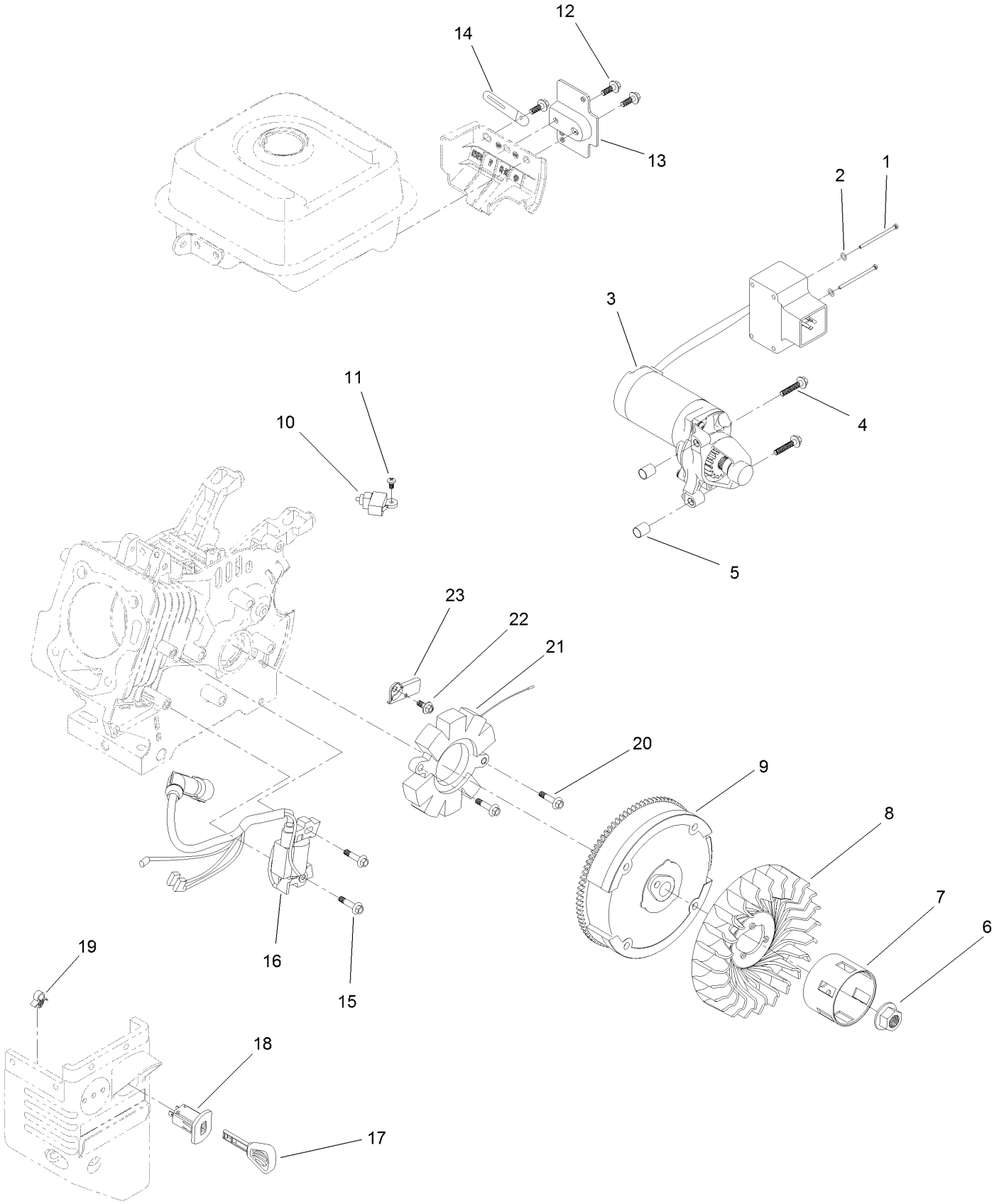

# Ignition and Electrical Assembly (continued)

| Ref. | Part Number | Qty. | Description |
|---|---|---|---|
| 1 | 121-0306 | 2 | Screw-Bhp |
| 2 | 121-0312 | 2 | Washer-Plain |
| 3 | 133-9999 | 1 | Motor-Starter |
| 4 | 133-1546 | 2 | Screw-Flange |
| 5 | 121-0055 | 2 | Pin-Dowel |
| 6 | 121-0047 | 1 | Nut-Flange |
| 7 | 133-1527 | 1 | Cup-Starter |
| 8 | 133-1526 | 1 | Fan-Cooling |
| 9 | 127-9484 | 1 | Flywheel ASM |
| 10 | 121-0284 | 1 | Switch-Kill, Engine |
| 11 | 120-4461 | 1 | Screw-PPH |
| 12 | 127-9123 | 3 | Screw-HHF |
| 13 | 133-1554 | 1 | Bracket-Switchbox, Starter |
| 14 | 121-0017 | 1 | Clip-Harness, Wire |
| 15 | 121-0097 | 2 | Screw-HHF |
| 16 | 133-9996 | 1 | Ignition Coil ASM |
| 17 | 117-7728 | 1 | Key |
| 18 | 121-0283 | 1 | Switch-Key |
| 19 | 121-0326 | 1 | Clip |
| 20 | 121-0196 | 2 | Screw-HHF |
| 21 | 127-9485 | 1 | Alternator |
| 22 | 121-0116 | 1 | Screw-HHF |
| 23 | 127-9486 | 1 | Clamp-Wire, Charge |

# Crankcase Assembly

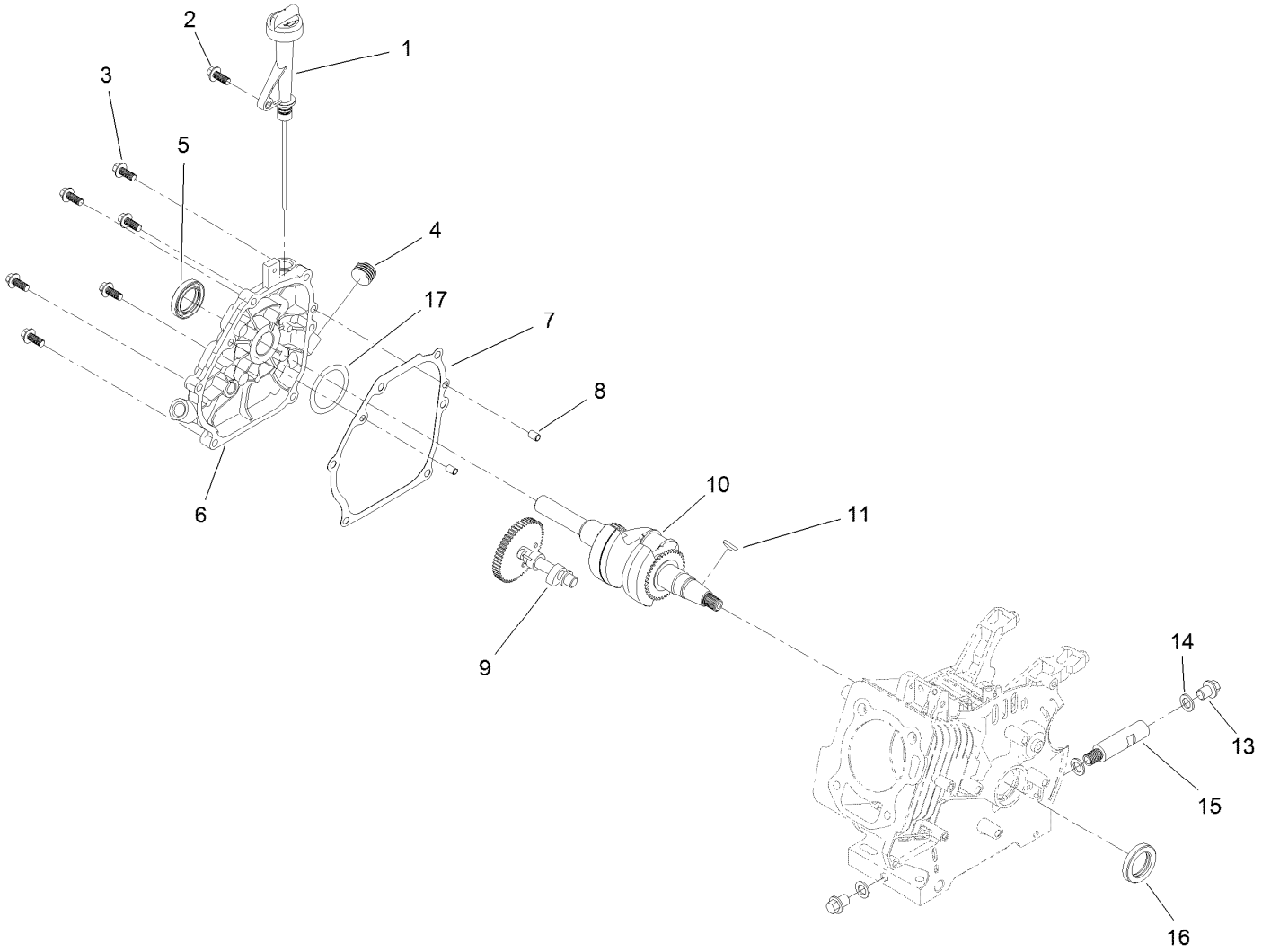

# Crankcase Assembly (continued)

| Ref. | Part Number | Qty. | Description |
|---|---|---|---|
| 1 | 133-9866 | 1 | Oil Fill Assembly |
| 2 | 127-9123 | 1 | Screw-HHF |
| 3 | 121-4114 | 6 | Screw-HHF |
| 4 | 133-9805 | 1 | Plug-Drain |
| 5 | 133-1516 | 1 | Seal-Oil |
| 6 | 133-9865 | 1 | Cover-Crankcase |
| 7 | 127-9493 | 1 | Gasket-Cover, Crankcase |
| 8 | 121-0054 | 2 | Pin-Dowel |
| 9 | 133-9991 | 1 | Camshaft ASM |
| 10 | 127-9495 | 1 | Crankshaft |
| 11 | 120-4320 | 1 | Key-Woodruff |
| 13 | 121-0030 | 2 | Screw-HHF |
| 14 | 121-0048 | 3 | Washer-Plain |
| 15 | 127-9104 | 1 | Tube-Drain, Oil |
| 16 | 133-9864 | 1 | Seal-Oil |
| 17 | 133-9863 | 1 | Washer-Thrust |

# Governor Assembly

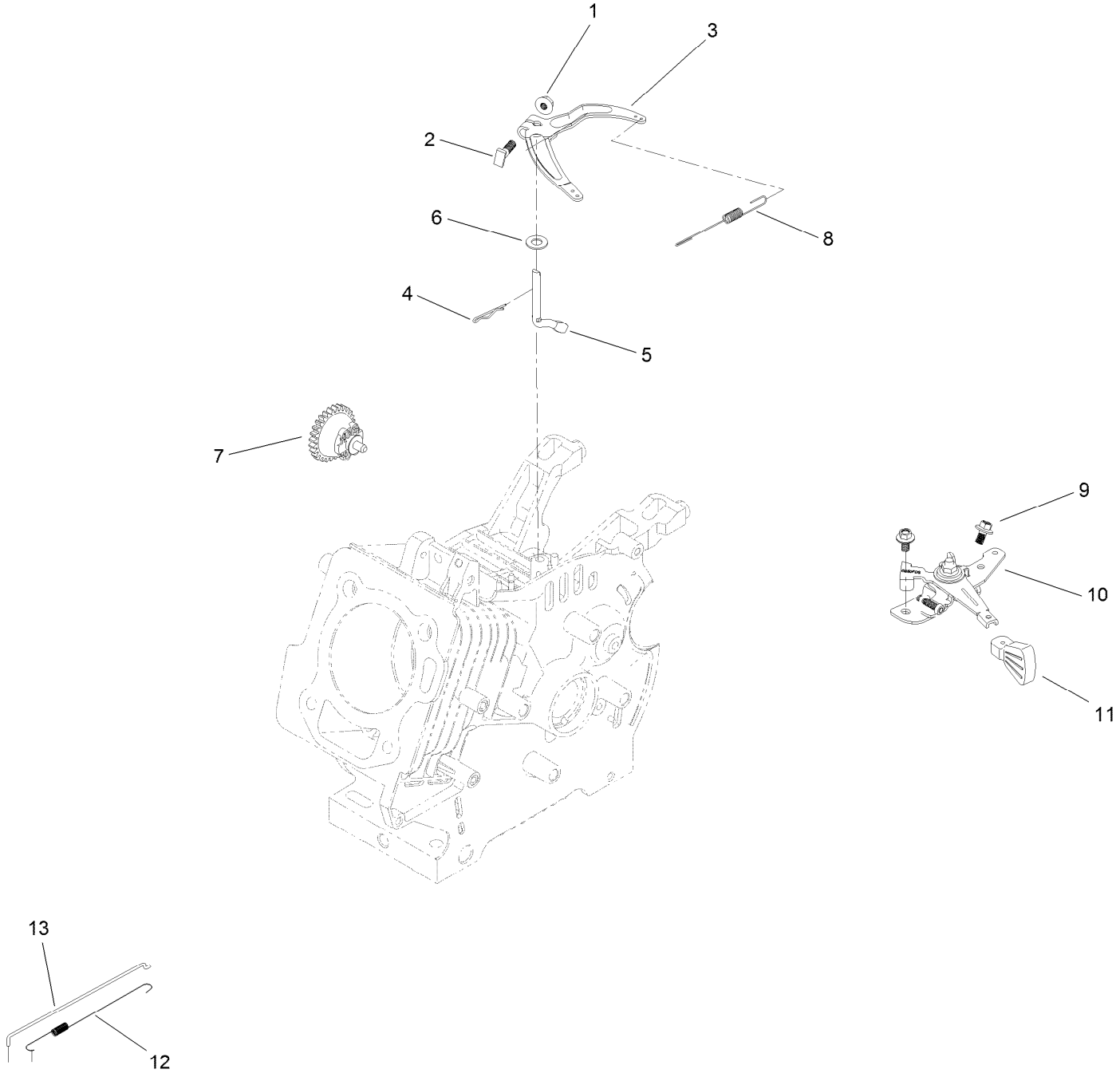

# Governor Assembly (continued)

| Ref. | Part Number | Qty. | Description |
|---|---|---|---|
| 1 | 120-4236 | 1 | Nut-Flange |
| 2 | 120-4238 | 1 | Bolt-Arm, Governor |
| 3 | 127-9482 | 1 | Arm-Governor |
| 4 | 120-4256 | 1 | Pin-Hair |
| 5 | 133-9995 | 1 | Shaft-Governor |
| 6 | 121-0498 | 1 | Washer-Plain |
| 7 | 127-9994 | 1 | Glass-Door, RH |
| 8 | 127-9483 | 1 | Spring-Governor |
| 9 | 121-0116 | 2 | Screw-HHF |
| 10 | 133-1555 | 1 | Throttle Control ASM |
| 11 | 121-0269 | 1 | Knob-Control, Throttle |
| 12 | 133-1536 | 1 | Spring-Return, Throttle |
| 13 | 133-1535 | 1 | Rod-Governor |

# Piston and Head Assembly

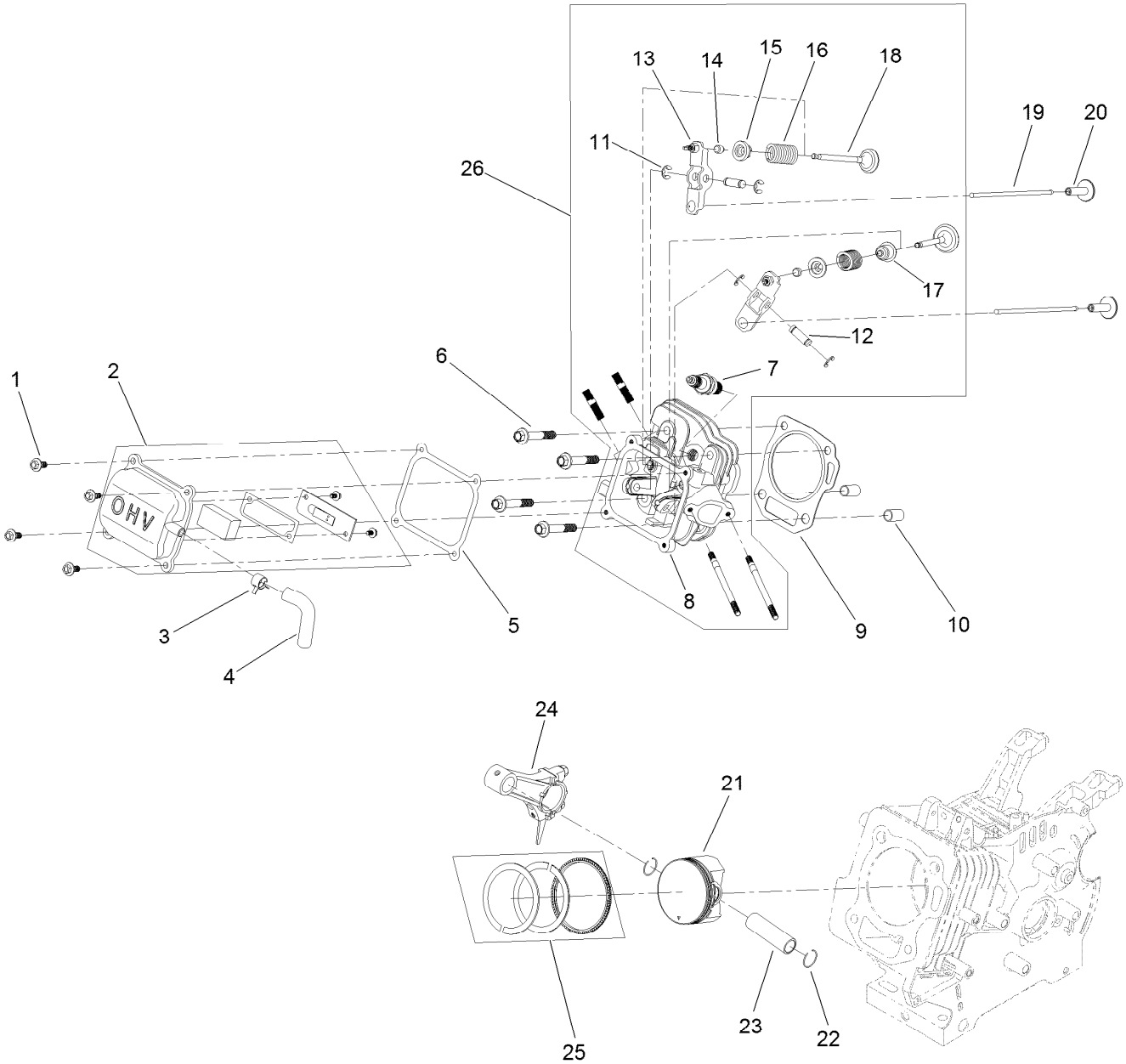

# Piston and Head Assembly (continued)

| Ref. | Part Number | Qty. | Description |
|---|---|---|---|
| 1 | 120-4454 | 4 | Screw-HHF |
| 2 | 133-1500 | 1 | Valve Cover ASM |
| 3 | 133-1558 | 1 | Clamp-Hose |
| 4 | 133-9990 | 1 | Tube-Breather |
| 5 | 133-1507 | 1 | Gasket-Cover, Valve |
| 6 | 133-1508 | 4 | Screw-Flange |
| 7 | 81-3250 | 1 | Spark Plug |
| 8 | 133-1509 | 1 | Head-Cylinder |
| 9 | 133-1510 | 1 | Gasket-Head |
| 10 | 120-4200 | 2 | Pin-Dowel |
| 11 | 133-1511 | 4 | E-Clip |
| 12 | 133-1512 | 2 | Pin-Arm, Rocker |
| 13 | 133-1513 | 2 | Rocker Arm ASM |
| 14 | 121-4116 | 2 | Rotator-Valve |
| 15 | 121-4117 | 2 | Retainer-Spring, Valve |
| 16 | 127-9014 | 2 | Spring-Valve |
| 17 | 121-4202 | 1 | Seal-Stem, Valve |
| 18 | 133-1515 | 1 | Set-Valve |
| 19 | 133-1514 | 2 | Rod-Push |
| 20 | 127-9015 | 2 | Tappet-Valve |
| 21 | 133-1522 | 1 | Piston |
| 22 | 121-0313 | 2 | Clip-Pin, Piston |
| 23 | 121-4128 | 1 | Pin-Piston |
| 24 | 121-4123 | 1 | Connecting Rod ASM |
| 25 | 133-1521 | 1 | Set-Ring, Piston |
| 26 | 133-9867 | 1 | Complete Head ASM |

# Blower Housing and Shrouds Assembly

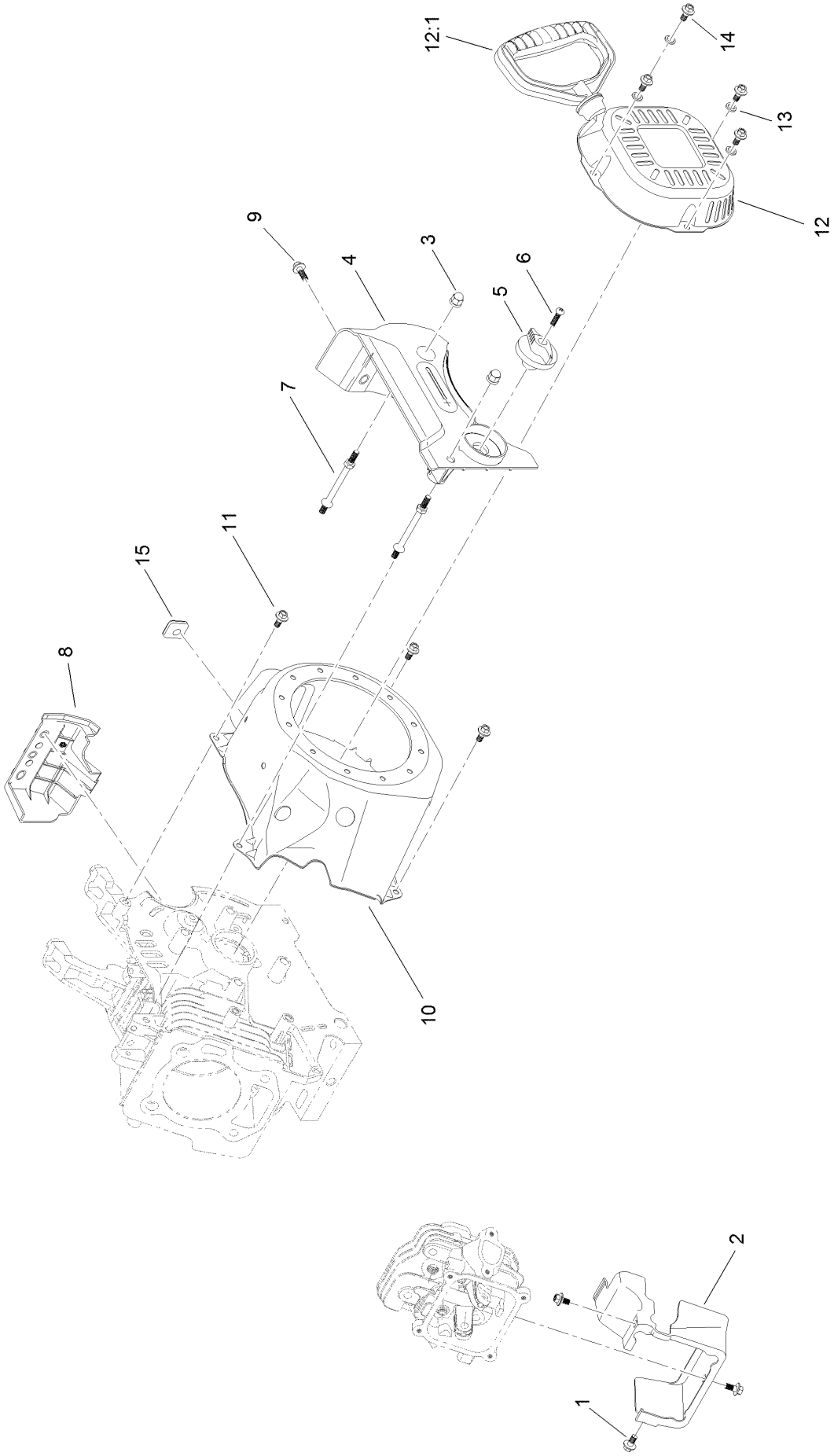

# Blower Housing and Shrouds Assembly (continued)

| Ref. | Part Number | Qty. | Description |
|---|---|---|---|
| 1 | 121-0116 | 3 | Screw-HHF |
| 2 | 133-1530 | 1 | Shroud-Head |
| 3 | 127-9383 | 2 | Nut-Acorn |
| 4 | 133-1557 | 1 | Panel-Control, Front |
| 5 | 121-0268 | 1 | Knob-Valve, Fuel |
| 6 | 121-0305 | 1 | Screw-Bhp |
| 7 | 127-9110 | 2 | Stud-Mount |
| 8 | 133-1543 | 1 | Panel-Side, Engine |
| 9 | 127-9123 | 1 | Screw-HHF |
| 10 | 133-1528 | 1 | Shroud-Flywheel |
| 11 | 121-0294 | 3 | Screw-HHF |
| 12 | 127-9487 | 1 | Recoil ASM |
| 12:1 | 121-0287 | 1 | Handle-Recoil |
| 13 | 127-9380 | 4 | Washer-Plain |
| 14 | 127-9031 | 4 | Screw-HHF |
| 15 | 133-1548 | 1 | Grommet-Rubber |

# Chute Assembly

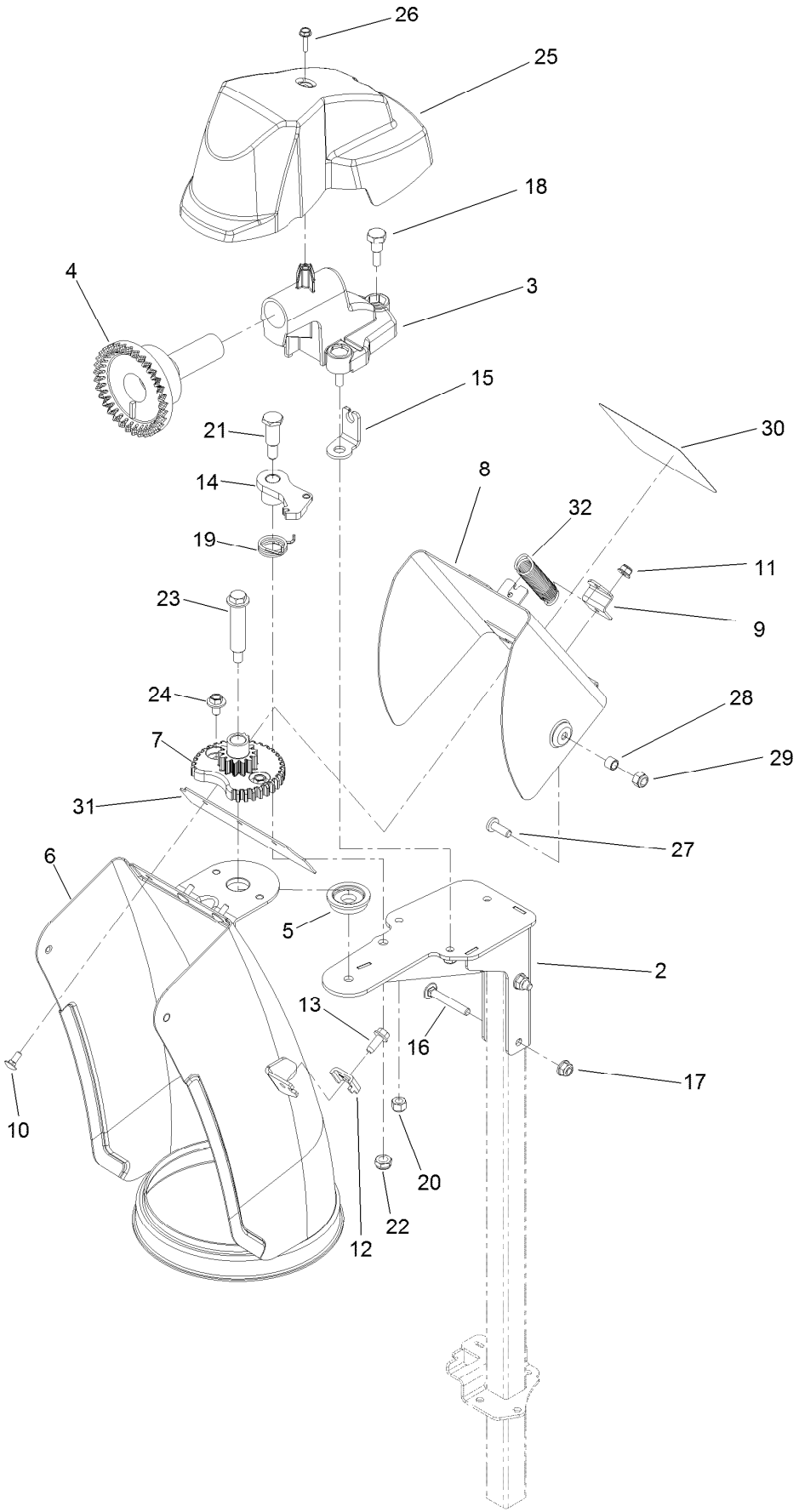

# Chute Assembly (continued)

| Ref. | Part Number | Qty. | Description |
|---|---|---|---|
| 2 | 138-3605-03 | 1 | Support-Chute |
| 3 | 138-3606 | 1 | Mount-Gear, Face |
| 4 | 106-4471 | 1 | Gear-Face |
| 5 | 106-4422 | 1 | Spacer-Chute |
| 6 | 138-3611-01 | 1 | Chute Weld ASM |
| 7 | 106-4472 | 1 | Gear-Chute |
| 8 | 138-3615-01 | 1 | Deflector Weld ASM |
| 9 | 138-3612-01 | 1 | Bracket-Spring |
| 10 | 135-1929 | 3 | Bolt-CARR |
| 11 | 138-0719 | 3 | Nut-HF |
| 12 | 136-7191 | 1 | Clamp-Cable |
| 13 | 137-3043 | 1 | Screw-HWH |
| 14 | 106-4476 | 1 | Latch-Chute |
| 15 | 138-3607 | 1 | Anchor-Cable |
| 16 | 120-9698 | 2 | Bolt-CARR |
| 17 | 119-4040 | 2 | Nut-Flange, NI |
| 18 | 136-7197 | 3 | Screw-Shoulder |
| 19 | 108-7315 | 1 | Spring-Torsion |
| 20 | 137-3088 | 3 | Nut-Hex |
| 21 | 137-3103 | 1 | Screw-Shoulder, HH |
| 22 | 137-3089 | 3 | Nut-Hex |
| 23 | 136-7199 | 3 | Bolt-Shoulder |
| 24 | 46-6810 | 2 | Screw And Washer ASM |
| 25 | 138-3627 | 1 | Cover-Chute, Gear |
| 26 | 98-1375 | 1 | Screw-HWH |
| 27 | 138-0689 | 1 | Screw-PH |
| 28 | 138-3678 | 1 | Spacer |
| 29 | 137-3094 | 1 | Nut-Hex |
| 30 | 137-6198 | 1 | Decal-Danger |
| 31 | 138-3671 | 1 | Gasket-Deflector |
| 32 | 138-8493 | 1 | Spring-Chute, Upper |

# Lever Chute Control Assembly

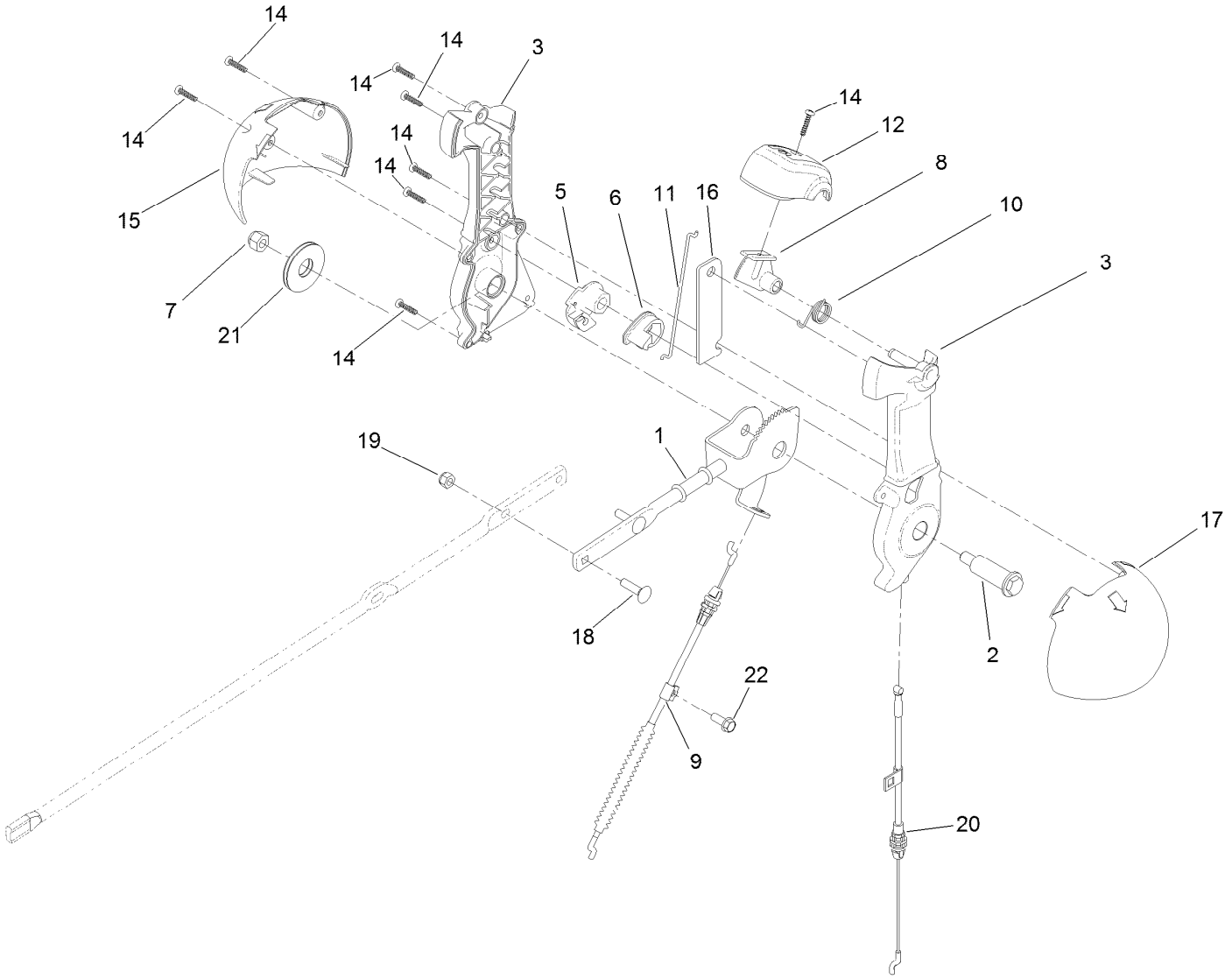

# Lever Chute Control Assembly (continued)

| Ref. | Part Number | Qty. | Description |
|---|---|---|---|
| 1 | 138-0662 | 1 | Rod-Control, Chute |
| 2 | 138-0659 | 1 | Screw-Shoulder, HWH |
| 3 | 139-1552 | 1 | Chute Control Lever ASM |
| 5 | 105-9988 | 1 | Lever-Cable, Deflector |
| 6 | 106-7310 | 1 | Pawl-Latch |
| 7 | 137-3087 | 1 | Nut-Hex |
| 8 | 137-6238 | 1 | Trigger-Latch |
| 9 | 138-3672 | 1 | Cable-Control, Deflector |
| 10 | 105-9982 | 1 | Spring-Torsion |
| 11 | 138-0688 | 1 | Link-Latch |
| 12 | 137-6239 | 1 | Cap-Lever |
| 14 | 94-4496 | 8 | Screw-PPH |
| 15 | 136-6677 | 1 | Globe-Quickstick, RH |
| 16 | 136-6632 | 1 | Plate-Stiffner |
| 17 | 136-6678 | 1 | Globe-Quickstick, LH |
| 18 | 137-3056 | 3 | Bolt-CARR |
| 19 | 137-3094 | 3 | Nut-Hex |
| 20 | 138-3673 | 1 | Cable-Release, Chute |
| 21 | 138-0744 | 1 | Washer-Friction, Composite |
| 22 | 32144-85 | 1 | Screw-HWH |

# Handle Assembly

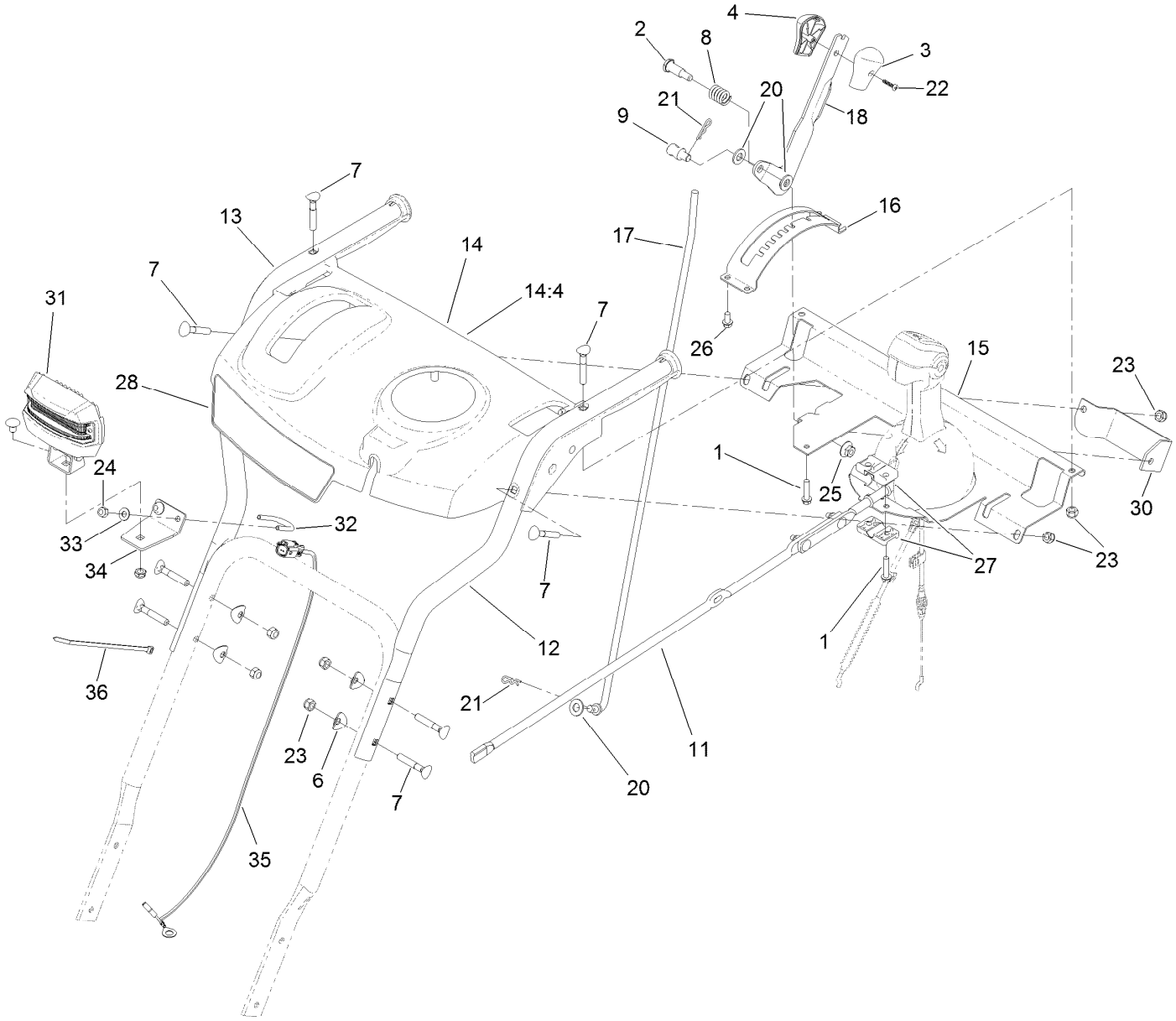

# Handle Assembly (continued)

| Ref. | Part Number | Qty. | Description |
|---|---|---|---|
| 1 | 137-3100 | 3 | Screw-Plastite, HWH |
| 2 | 137-3103 | 1 | Screw-Shoulder, HH |
| 3 | 105-9999 | 1 | Knob-Shift, LH |
| 4 | 106-4423 | 1 | Knob-Shift, RH |
| 6 | 137-3009 | 4 | Washer-Cup |
| 7 | 137-3107 | 8 | Screw-Handle |
| 8 | 136-7121 | 1 | Spring-Compression |
| 9 | 136-7193 | 1 | Trunnion-Rod |
| 11 | 138-3635 | 1 | Rod-Chute |
| 12 | 120-7173-03 | 1 | Handle-Upper, LH |
| 13 | 120-7174-03 | 1 | Handle-Upper, RH |
| 14 | 138-8487 | 1 | Control Panel ASM |
| 14:4 | 121-1240 | 1 | Decal-Safety |
| 15 | 138-3676-03 | 1 | Support-Panel, Control |
| 16 | 120-9258-03 | 1 | Mount-Selector, Speed |
| 17 | 136-7163 | 1 | Rod-Selector, Gear |
| 18 | 121-1242-03 | 1 | Selector-Speed |

| Ref. | Part Number | Qty. | Description |
|---|---|---|---|
| 20 | 131-8667 | 3 | Washer-Thrust |
| 21 | 137-3083 | 2 | Pin-Hair |
| 22 | 94-4496 | 1 | Screw-PPH |
| 23 | 137-3093 | 8 | Nut-Hex |
| 24 | 137-3094 | 2 | Nut-Hex |
| 25 | 137-3038 | 1 | Nut-HF |
| 26 | 46-8093 | 4 | Screw-Plastite |
| 27 | 105-9987 | 2 | Support-Rod |
| 28 | 139-3693 | 1 | Decal-Console |
| 30 | 120-2301-03 | 1 | Plate-Support, Shift |
| 31 | 138-0670 | 1 | LED Light ASM |
| 32 | 136-7120 | 1 | Clamp-Light |
| 33 | 137-3072 | 2 | Washer-Plain |
| 34 | 127-5961-03 | 1 | Bracket-Light |
| 35 | 138-3658 | 1 | Harness-Wire |
| 36 | 614249 | 1 | Tie-Cable |

# Control Assembly

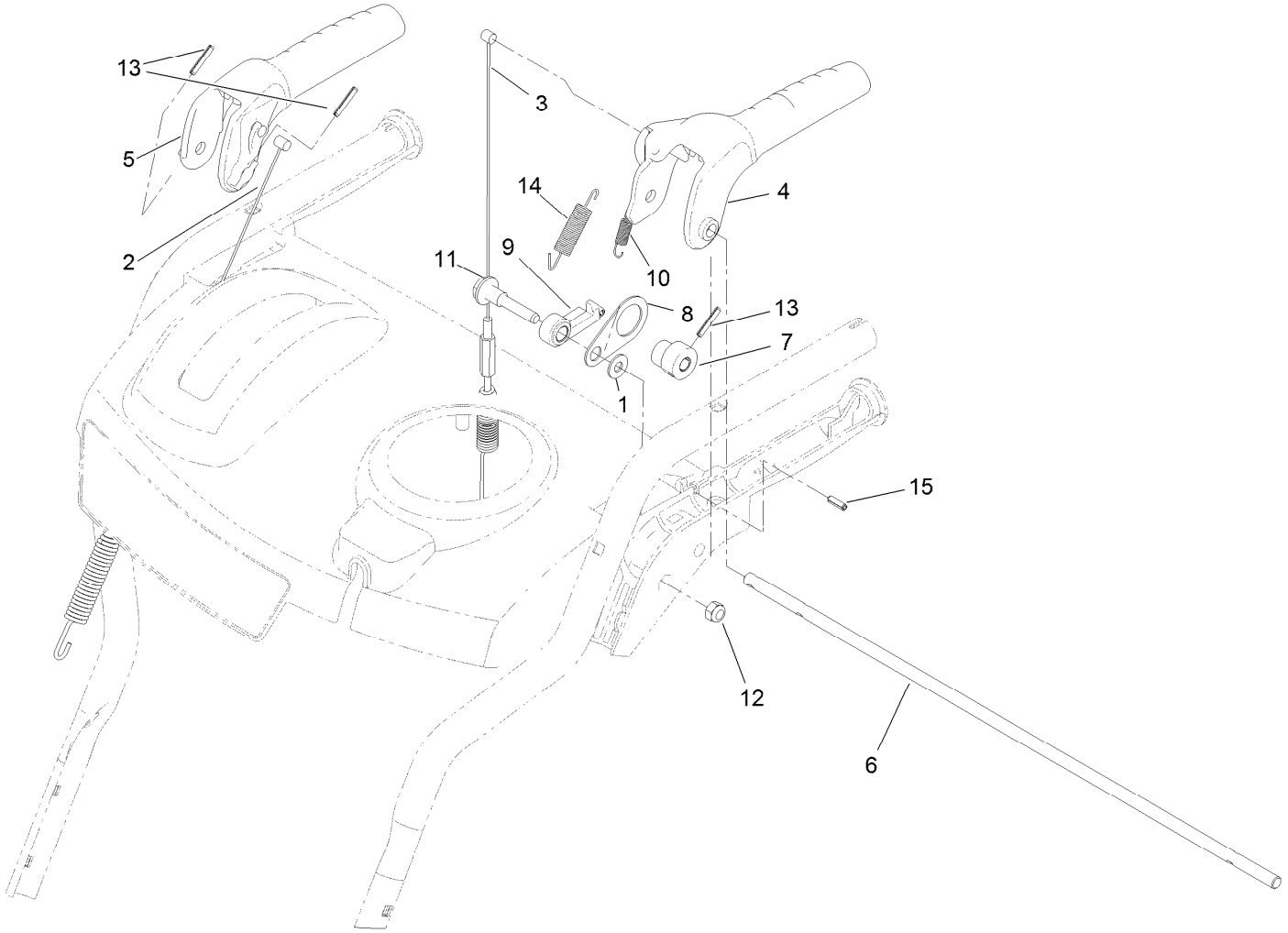

# Control Assembly (continued)

| Ref. | Part Number | Qty. | Description |
|---|---|---|---|
| 1 | 98-3499 | 1 | Washer-Flat |
| 2 | 121-6812 | 1 | Cable-Auger |
| 3 | 121-6813 | 1 | Cable-Traction |
| 4 | 121-1200 | 1 | Handle-Control, Traction |
| 5 | 121-1201 | 1 | Handle-Control, Auger |
| 6 | 136-7125 | 1 | Rod-Lockout |
| 7 | 121-1203 | 1 | Cam-Lockout |
| 8 | 136-7160 | 1 | Link-Lockout |
| 9 | 121-1205 | 1 | Latch-Lockout |
| 10 | 136-7161 | 1 | Spring-Lockout, Handle |
| 11 | 136-7194 | 1 | Screw-Shoulder |
| 12 | 137-3093 | 1 | Nut-Hex |
| 13 | 137-3035 | 3 | Pin-Spring |
| 14 | 136-7162 | 1 | Spring-Return, Lever |
| 15 | 32121-2 | 1 | Pin-Roll, Slotted |

# Attachments and Accessories

## For 38819 Power Max 826 OXE Snowthrower

| Product Name | Model/Part |
|---|---|
| Weight Kit | 107-3815 |
| Snow Cab Kit | 127-5960 |
| Engine Maintenance Kit | 138-0702 |
| Non-Marking Skid Kit | 38211 |
| Heavy-Duty Skid Kit | 38212 |
| Drift Breaker Kit | 38213 |
| Toro Snow Oil 0W30 Synthetic 20-Ounce Bottle | 38913 |
| Toro 2-Stage Cover | 490-7466 |
| Plain 2-Stage Cover | 490-7467 |

**Notes:**

TORO®

Count on it.