Form No. 3423-432 Rev B

TORO®

Count on it.

Parts Catalog

Power Max® 826 OXE

Snowthrower

Model No. 38819—Serial No. 400000000 and Up

Register at www.Toro.com.
Original Instructions (EN)

CE

3423-432 B

Ordering Replacement Parts

To order replacement parts, please supply the part number, the quantity, and the description of each part desired.

Understanding Reference Numbers

Each identified part in an illustration has a reference number. The reference number for a part also appears in the parts list, along with other information about the part.

This catalog uses two special reference number formats, one to indicate parts in a service assembly and another to indicate the quantity of a given part in an illustration.

Service Assembly Reference Numbers

Parts in service assemblies have reference numbers in the form a:b. The a represents the reference number of the entire service assembly and the b represents a sequential number unique to each part within the service assembly.

For example, a wheel assembly might be identified by reference number 6, the tire by 6:1, the valve by 6:2, and the wheel by 6:3. When you order the assembly identified by reference number 6, you receive all parts identified by reference numbers 6:1,6:2, and 6:3. However, you may also order any part individually. Reference numbers of this type appear in illustration and in parts lists.

Reference Numbers Indicating Quantity

In an illustration, if a reference number indicates more than one part, the reference number has the form nX y. The n represents the quantity of the part, the X is the multiplication symbol, and the y represents the reference number.

For example, in an illustration, the reference number 2X 37 means that two of the parts identified by reference number 37 are indicated.

Contents

Main Frame and Auger Housing Assembly 4
Pulley and Bellcrank Assembly 6
Impeller Drive Assembly 8
Drive Assembly 10
Tire and Drive Assembly 12
Gearbox, Auger and Impeller Assembly 14
26 Inch Auger Gearcase Assembly No. 119-7641 16
Impeller Assembly 18
Engine Assembly 20
Engine Decal Assembly 22
Fuel System and Carburetor Assembly 24
Intake and Exhaust Assembly 26
Ignition and Electrical Assembly 28
Crankcase Assembly 30
Governor Assembly 32
Piston and Head Assembly 34
Blower Housing and Shrouds Assembly 36
Chute Assembly 38
Lever Chute Control Assembly 40
Handle Assembly 42
Control Assembly 44
Attachments and Accessories 46

© 2019—The Toro® Company
8111 Lyndale Avenue South
Bloomington, MN 55420

Contact us at www.Toro.com.
Printed in the USA.
All Rights Reserved

Main Frame and Auger Housing Assembly

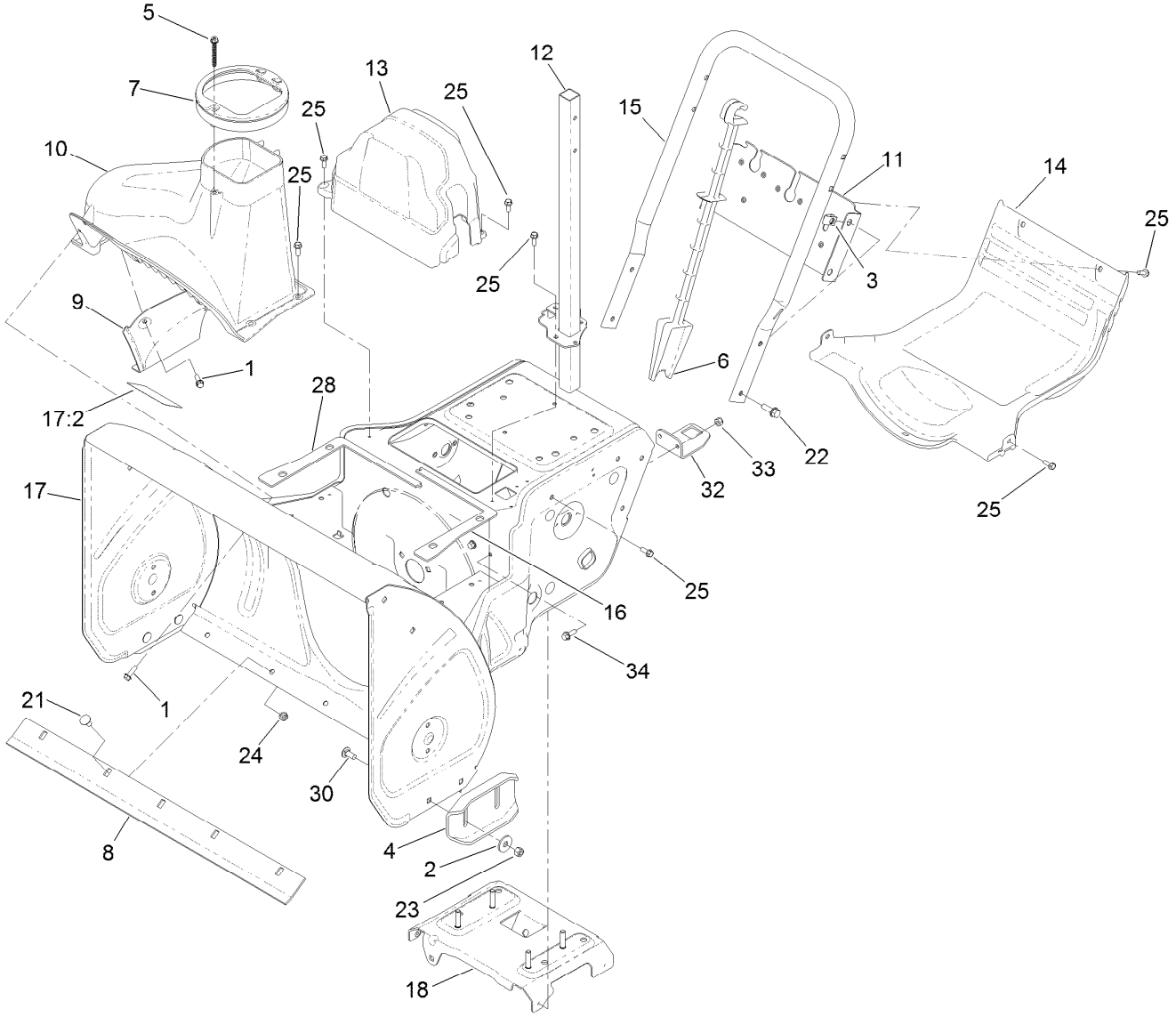

Main Frame and Auger Housing Assembly (continued)

Ref.	Part Number	Qty.	Description
1	137-3099	6	Screw-Plastite, HWH
2	119-4150	4	Washer-Flat
3	94-2413	4	Nut-U
4	106-4588-01	2	Skid
5	137-3015	1	Screw-HWH, Plastite
6	121-6833	1	Stick-Cleanout
7	138-3608	1	Guide-Chute
8	120-3872-01	1	Scraper-26 Inch
9	120-7158-01	1	Cover-Liner
10	120-7159	1	Cover
11	120-7161-01	1	Brace-Frame
12	137-3412-03	1	Support-Chute
13	120-7177	1	Cover-Belt
14	120-7178	1	Cover-Lower
15	120-7179-03	1	Handle-Lower
16	120-7181	1	Seal-Housing, LH
17	131-6469	1	Frame ASM
17:2	121-6817	1	Decal-Danger, Auger
18	136-7187	1	Brace-Frame
21	137-3060	5	Bolt-CARR
22	137-3067	4	Screw-HHF
23	119-4038	4	Nut-Hex
24	137-3089	5	Nut-Hex
25	32144-85	17	Screw-HWH
28	121-6841	1	Seal-Housing, RH
30	137-3061	4	Bolt-CARR
32	137-3410-03	1	Bracket-Post, Chute
33	120-9678	2	Screw-HHF
34	137-3094	2	Nut-Hex

Pulley and Bellcrank Assembly

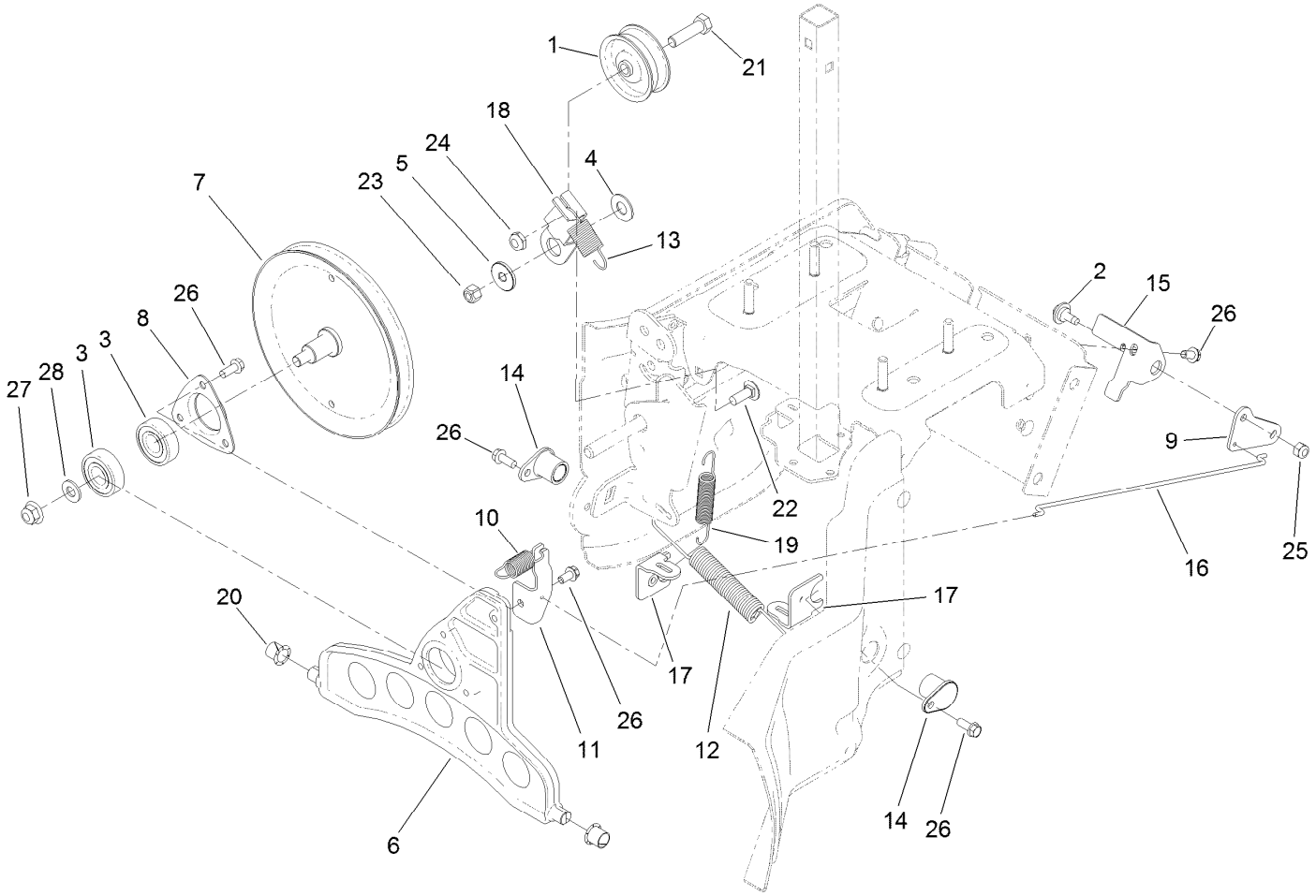

Pulley and Bellcrank Assembly (continued)

Ref.	Part Number	Qty.	Description
1	3-4244	1	Pulley-Idler
2	92-9698	1	Screw-Shoulder
3	38-7820	2	Bearing-Ball
4	25-5640	1	Washer
5	117-7711	1	Bushing-Idler
6	119-7645	1	Plate-Wheel, Friction
7	136-7152	1	Traction Pulley ASM
8	136-7124	1	Retainer-Bearing
9	119-7670-03	1	Bellcrank-Drive
10	136-7153	1	Spring-Extension
11	119-7679	1	Bracket-Plate, Traction
12	120-3883	1	Spring-Extension
13	137-3435	1	Spring-Extension
14	120-7156	2	Bushing-Plate, Traction
15	120-7165-03	1	Bracket-Bellcrank
16	136-7155	1	Link-Drive
17	120-9271	2	Bracket-Anchor, Spring
18	136-7159	1	Arm-Idler, Traction
19	120-9275	1	Spring-Extension
20	256-257	2	Bushing-Nyliner
21	137-3065	1	Screw-HH
22	137-3058	1	Bolt-CARR
23	119-4038	1	Nut-Hex
24	121-4600	1	Nut-Hex
25	137-3094	1	Nut-Hex
26	32144-85	7	Screw-HWH
27	119-4042	1	Nut-HF, NI
28	115-1166	1	Washer-Flat

Impeller Drive Assembly

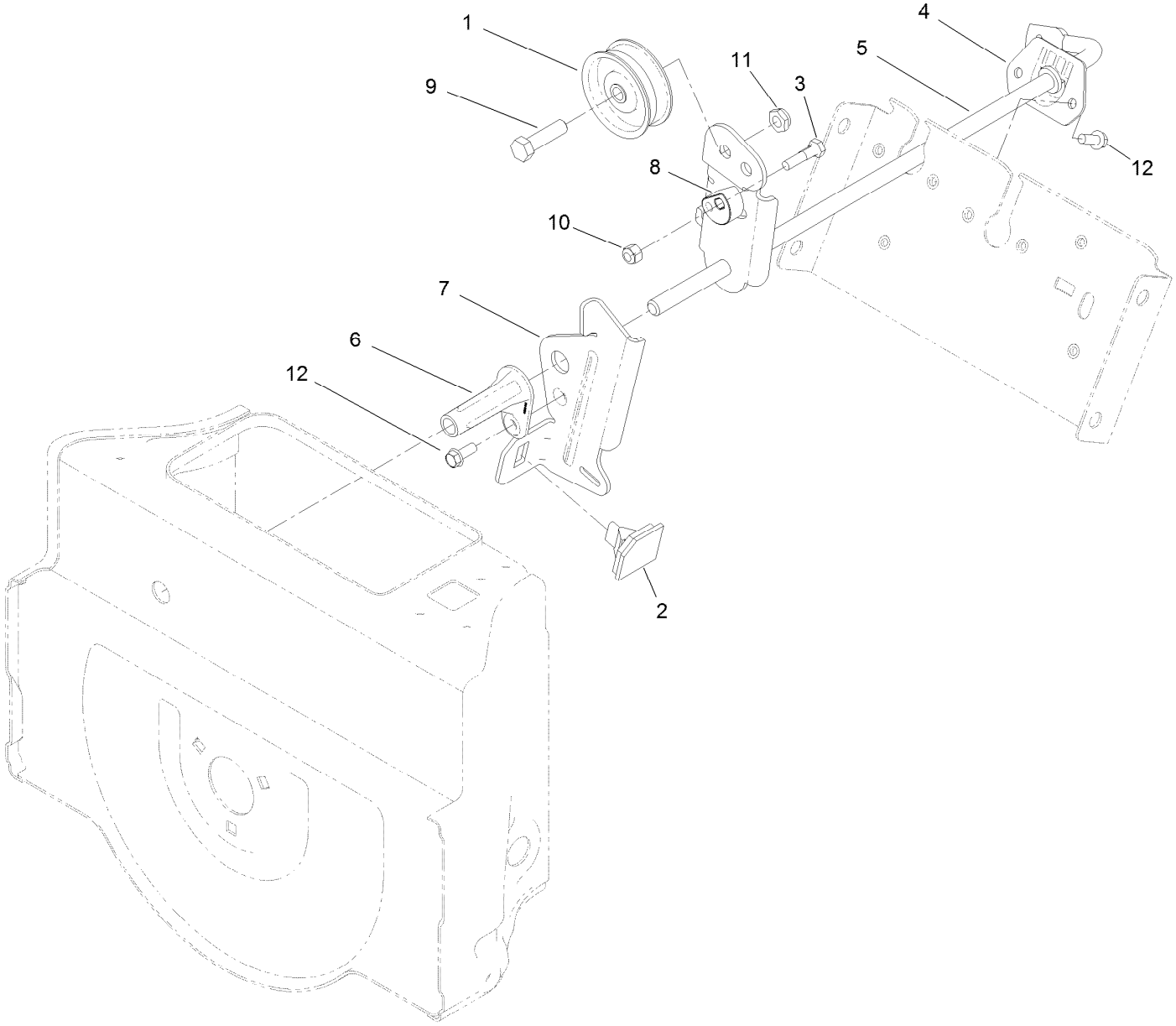

Impeller Drive Assembly (continued)

Ref.	Part Number	Qty.	Description
1	3-4244	1	Pulley-Idler
2	66-8060	1	Pad-Brake
3	136-8674	1	Bolt-Pivot, Eccentric
4	120-7167	1	Bushing-Rod, Clutch
5	120-9254-03	1	Impeller Clutch ASM
6	120-9256	1	Pivot-Brake, Impeller
7	120-9257-03	1	Arm-Brake, Impeller
8	120-9276	1	Eccentric-Brake, Impeller
9	137-3065	1	Screw-HH
10	137-3088	1	Nut-Hex
11	121-4600	1	Nut-Hex
12	32144-85	3	Screw-HWH

Drive Assembly

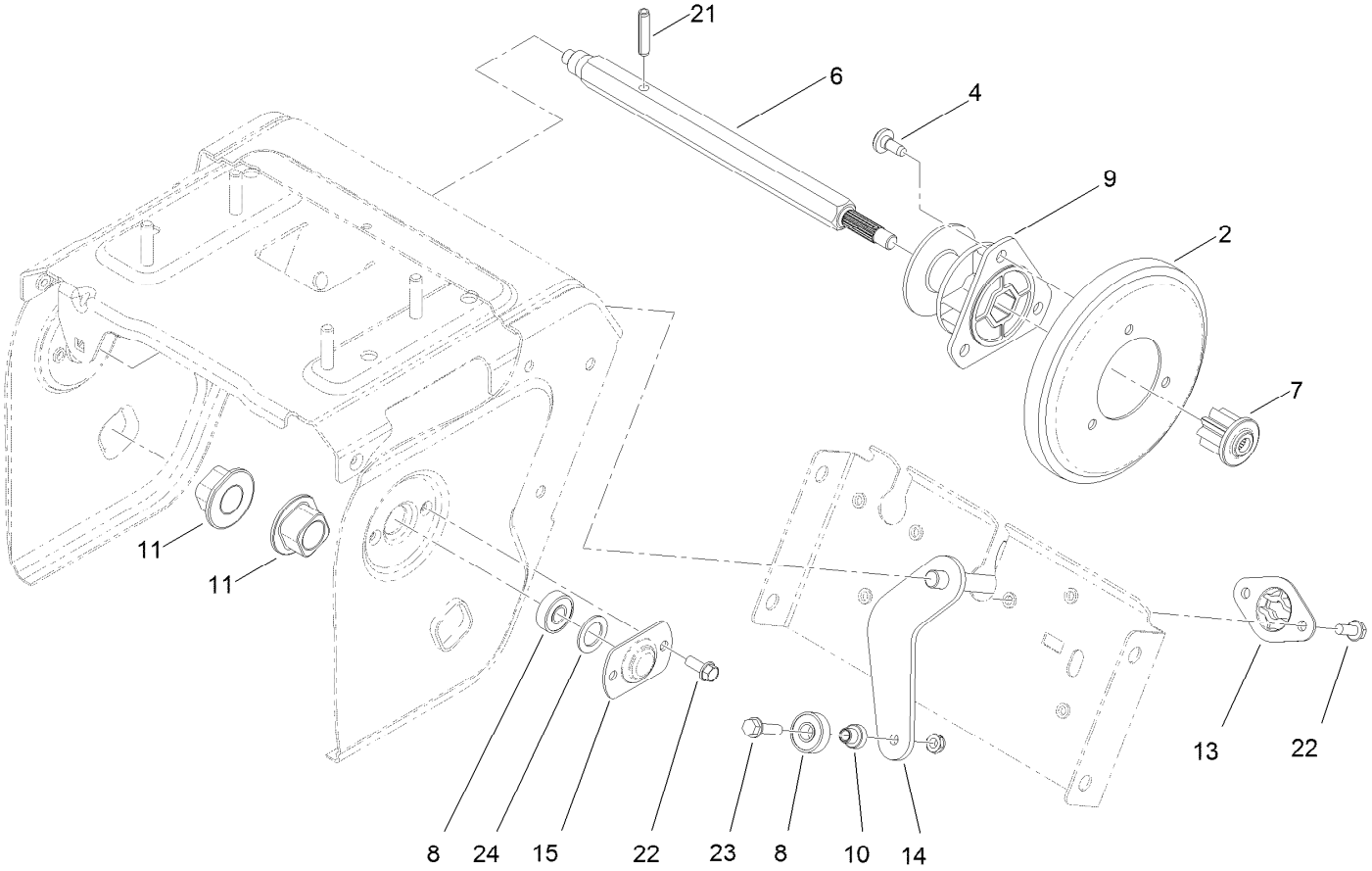

Drive Assembly (continued)

Ref.	Part Number	Qty.	Description
2	119-1567	1	Wheel-Friction
4	120-7950	3	Screw-Torx Shldr Self TAP
6	119-7615	1	Shaft-Hex
7	119-7616	1	Gear-Pinion, 8 Tooth
8	121-6835	3	Bearing-Ball
9	119-7630	1	Trunnion
10	119-7684	1	Spacer-Plate, Shift
11	120-7162	2	Bushing-Axle

Ref.	Part Number	Qty.	Description
13	120-7191	1	Retainer-Plate, Shift
14	120-7193-03	1	Shift Plate ASM
15	136-7158	2	Retainer-Bearing
21	32121-9	1	Pin-Roll, Slotted
22	32144-85	6	Screw-HWH
23	32144-86	1	Screw-HWHTF
24	121-6840	2	Washer-Rubber

Tire and Drive Assembly

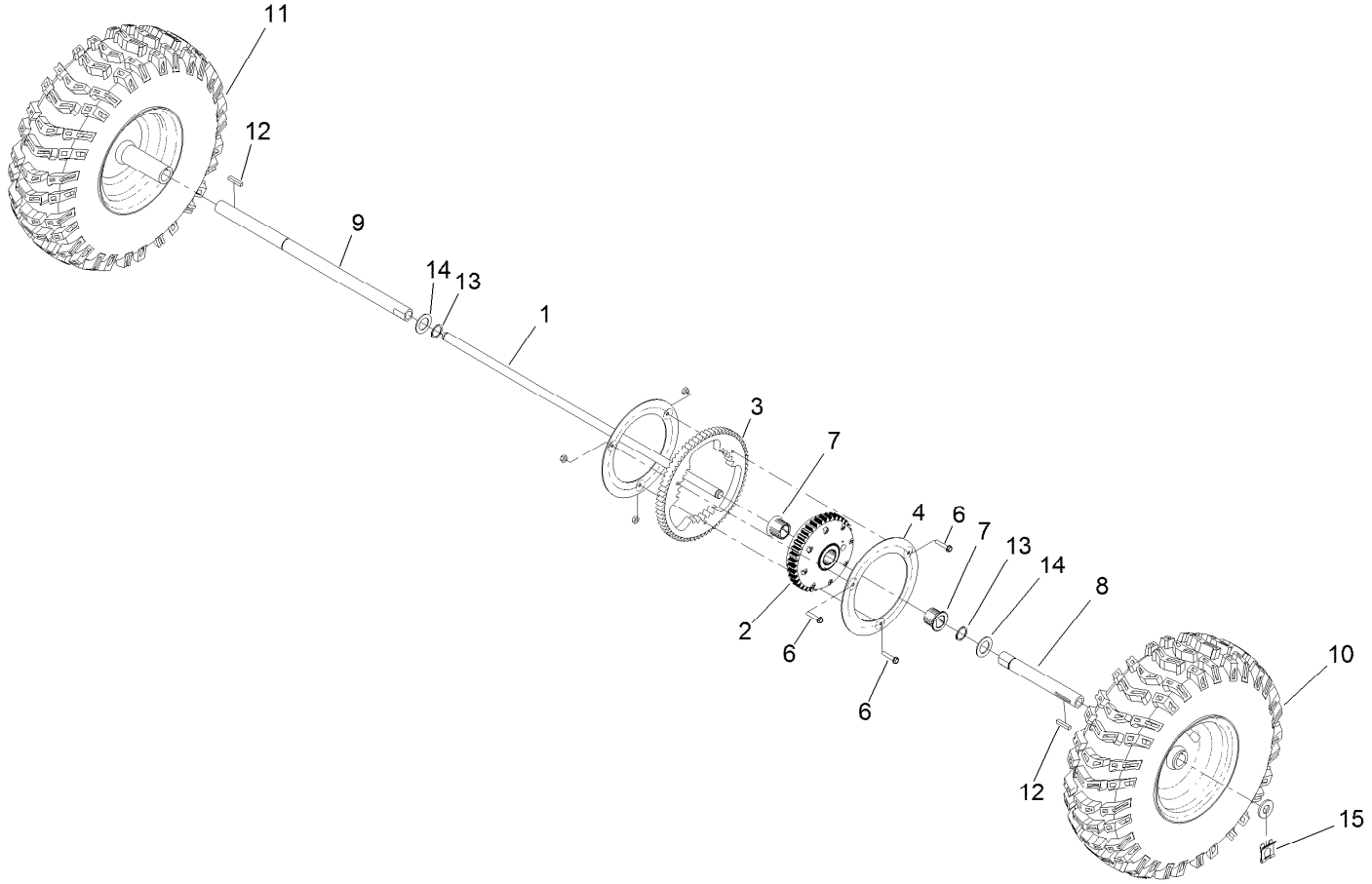

Tire and Drive Assembly (continued)

Ref.	Part Number	Qty.	Description
1	130-9789	1	Axle
2	130-9776	1	Transmission
3	130-9786	1	Gear-Axle
4	130-9798-03	2	Plate-Gear
6	131-6456	3	Screw-HWH
7	130-9799	2	Gear-Tube, Axle
8	130-9792	1	Tube-Axle
9	130-9793	1	Tube-Axle
10	137-3437	1	LH Wheel And Tire ASM
11	137-3438	1	RH Wheel And Tire ASM
12	5-1077	2	Key-Square
13	32120-72	2	Ring-Snap
14	3-8664	2	Washer-Thrust
15	138-8491	2	Clip-Pin

Gearbox, Auger and Impeller Assembly

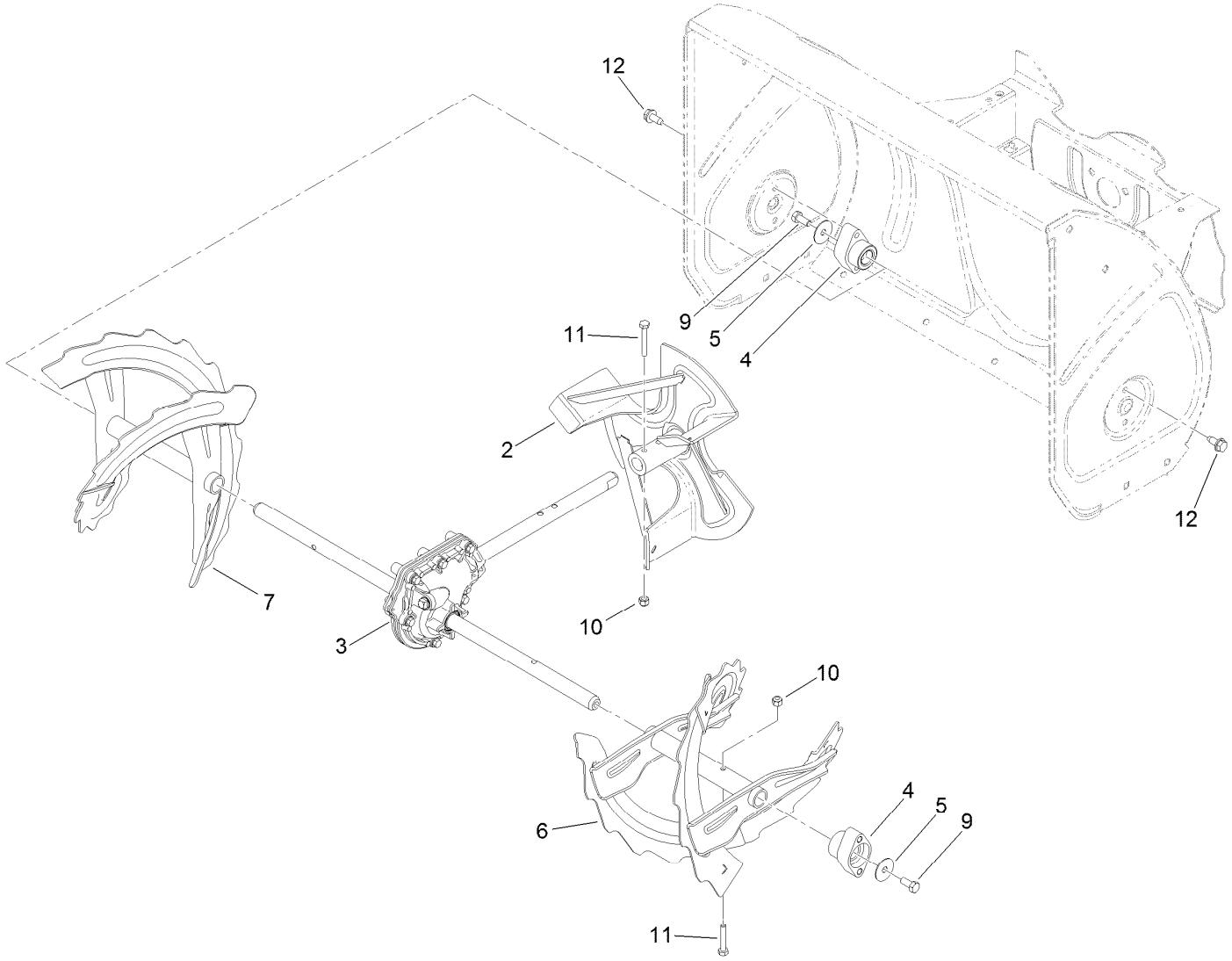

Gearbox, Auger and Impeller Assembly (continued)

Ref.	Part Number	Qty.	Description
2	119-7612-03	1	Impeller ASM
3	119-7641	1	Gearcase ASM
4	120-3860	2	Bearing-Auger
5	120-3862	2	Washer-Thrust
6	120-9287-03	1	LH Auger ASM
7	120-9290-03	1	RH Auger ASM
9	137-3052	2	Screw-HH
10	137-3088	4	Nut-Hex
11	05010	4	Bolt
12	32144-70	4	Screw-HWHTF

26 Inch Auger Gearcase Assembly No. 119-7641

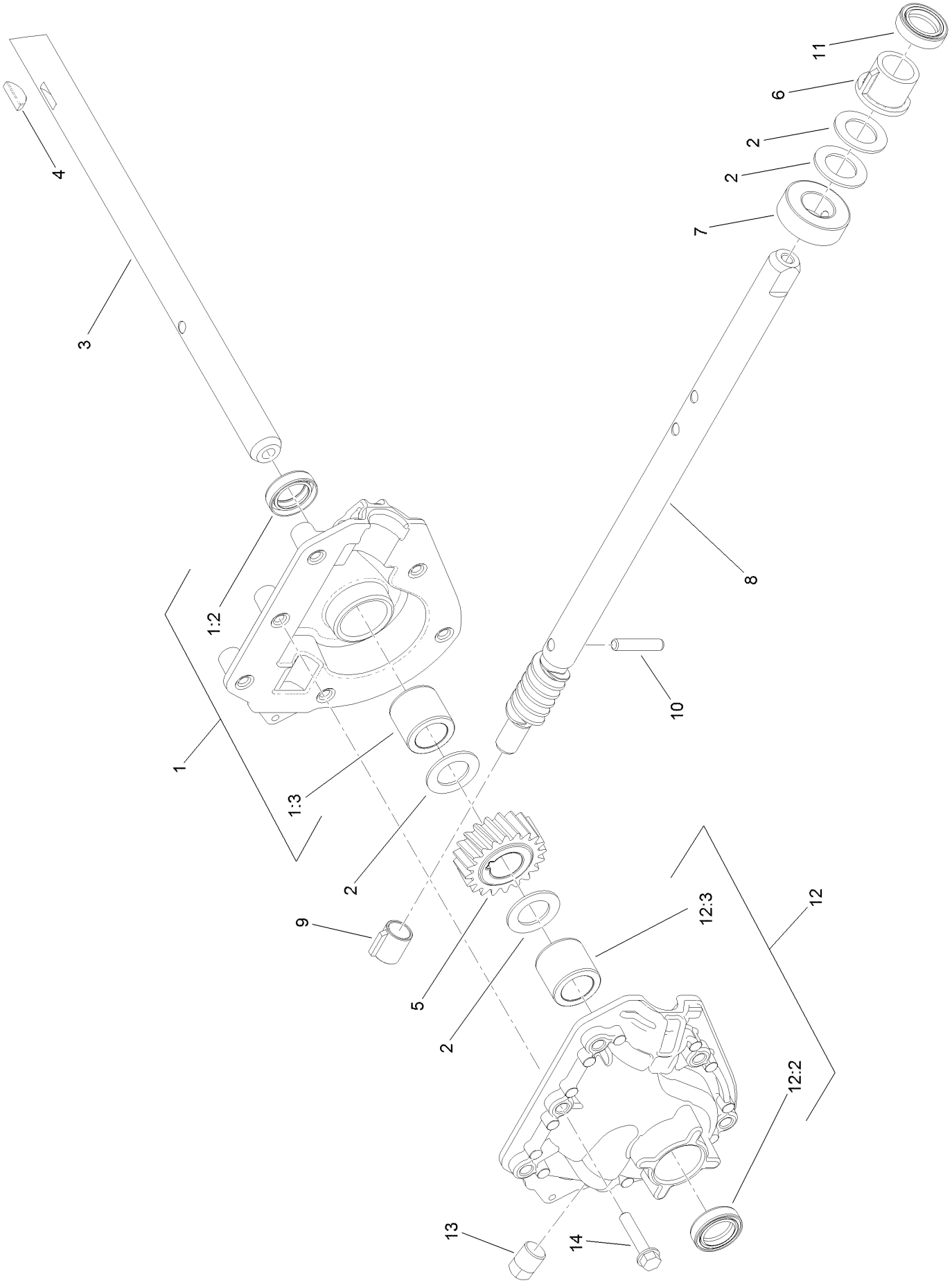

26 Inch Auger Gearcase Assembly No. 119-7641 (continued)

Ref.	Part Number	Qty.	Description
1	121-1209	1	RH Auger Gearcase ASM
1:2	121-6634	1	Seal-Shaft
1:3	120-9269	1	Bushing-Sleeve
2	119-7640	4	Washer-Thrust
3	119-7639	1	Shaft-Output, Auger
4	3257-5	1	Key-Woodruff
5	119-1576	1	Gear-Helical, 20 Tooth
6	119-7635	1	Bushing-Input
7	119-7636	1	Collar-Thrust
8	121-1234	1	Shaft-Impeller, Rolled
9	62-1150	1	Bushing-Worm
10	107-8899	1	Pin-Dowel
11	121-6634	1	Seal-Shaft
12	121-1210	1	LH Auger Gearcase ASM
12:2	121-6634	1	Seal-Shaft
12:3	120-9269	1	Bushing-Sleeve
13	121-6832	1	Plug-Pipe, SQH
14	108-4862	6	Screw-HWH Thd Roll

Impeller Assembly

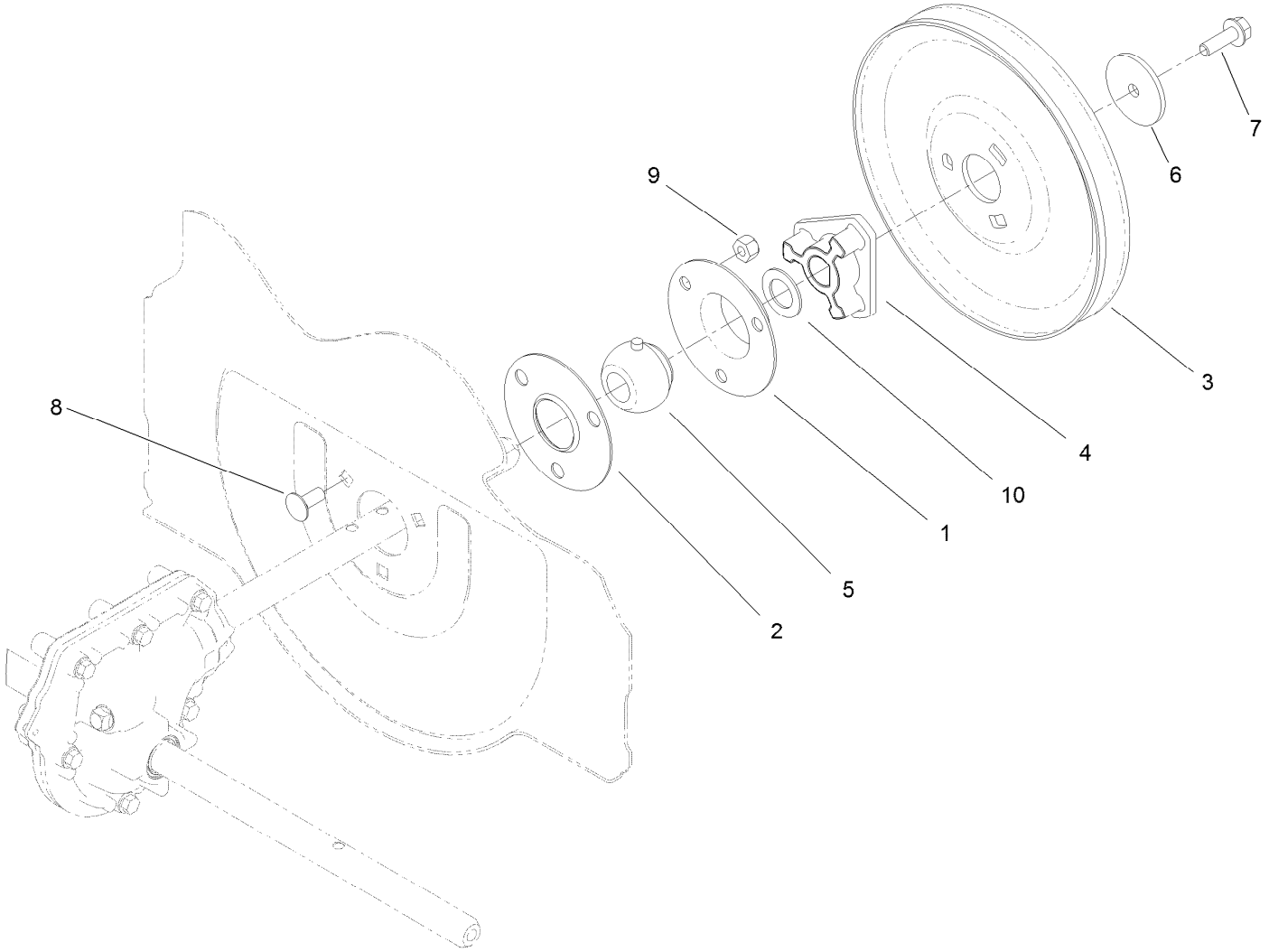

Impeller Assembly (continued)

Ref.	Part Number	Qty.	Description
1	26-6110	1	Flange-Cup, Bearing
2	26-6120	1	Flange-Cup, Bearing
3	136-7157	1	Pulley-Impeller
4	120-9264	1	Hub-Impeller, Pulley
5	120-9272	1	Bearing
6	137-3121	1	Washer-Plain
7	115-5142	1	Screw-HHF
8	137-3061	3	Bolt-CARR
9	119-4038	3	Nut-Hex
10	119-7640	1	Washer-Thrust

Engine Assembly

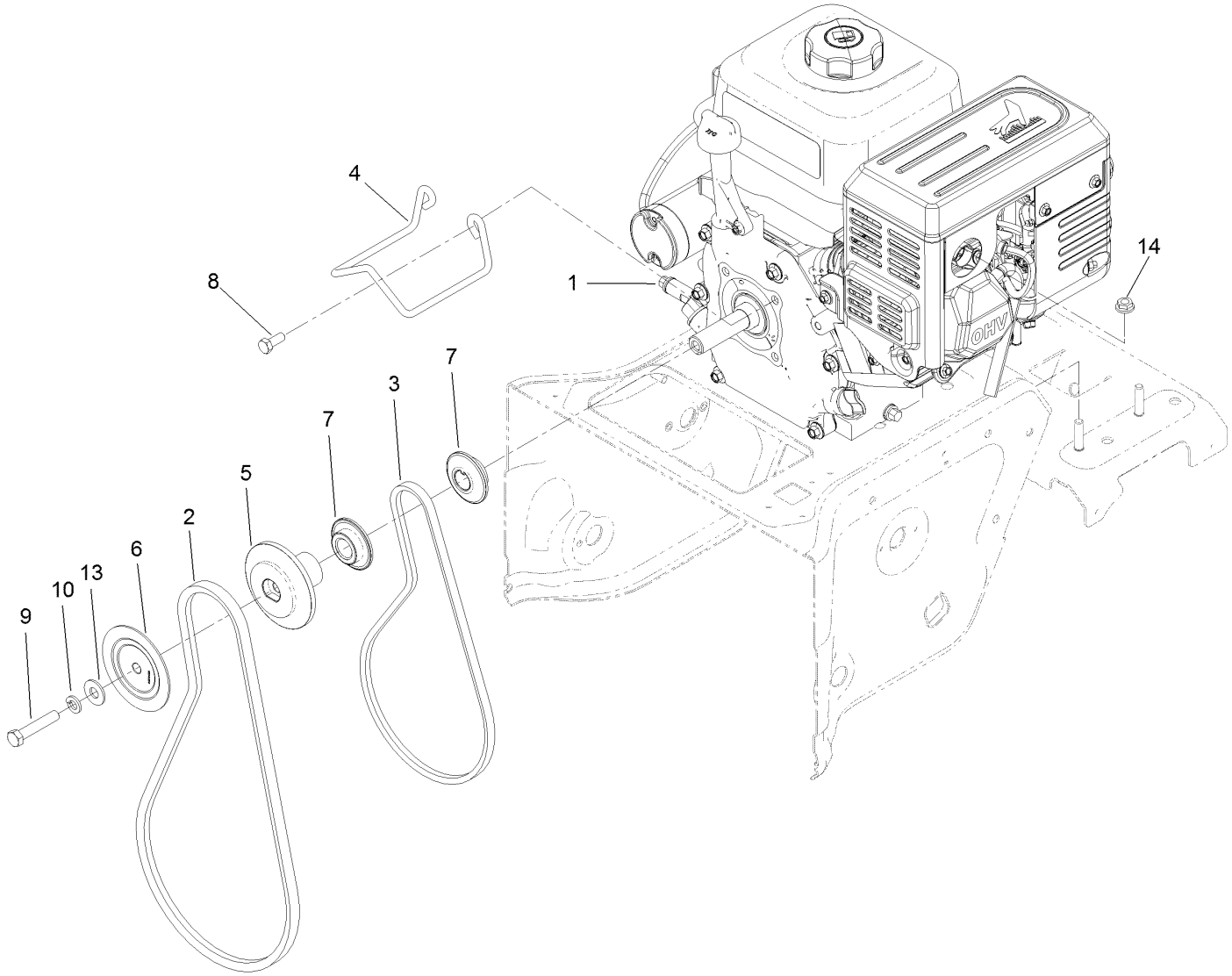

Engine Assembly (continued)

Ref.	Part Number	Qty.	Description
1	136-7757	1	Engine-G250Fds-1
2	120-3892	1	Belt-V
3	120-3893	1	Belt-V
4	136-7156	1	Guide-Belt
5	120-9283	1	Pulley-Auger, Rear
6	120-9284	1	Pulley-Auger, Front
7	137-3400	2	Pulley-Engine, Traction
8	138-0690	2	Screw-HH
9	120-2302	1	Screw-HH
10	3253-21	1	Washer-Lock
13	137-3078	1	Washer-Plain
14	137-3039	4	Nut-HF

Engine Decal Assembly

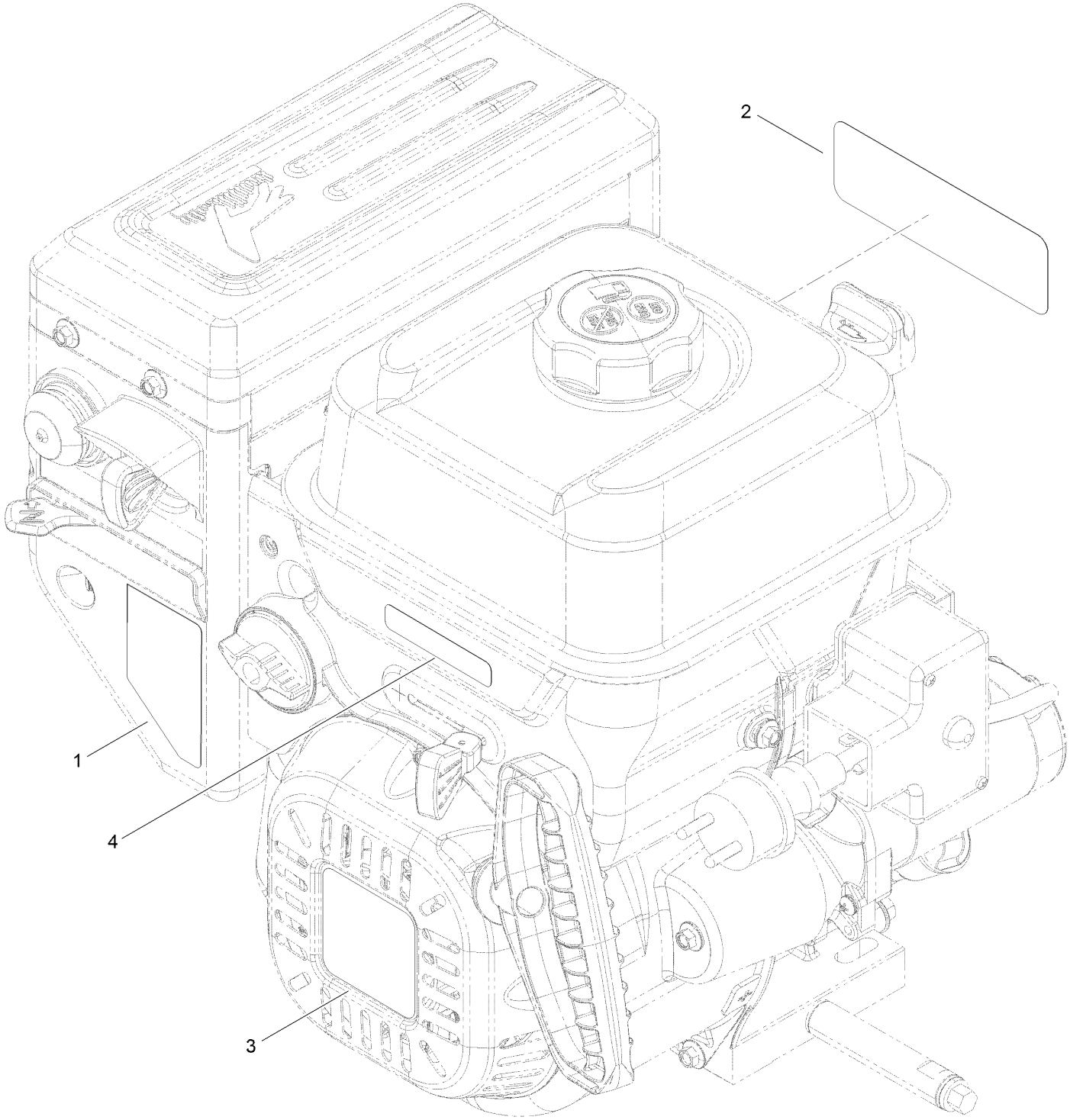

Engine Decal Assembly (continued)

Ref.	Part Number	Qty.	Description
1	120-9805	1	Decal-Control, Engine
2	131-5911	1	Decal-Engine Series, G250
3	131-5912	1	Decal-Recoil, G250
4	131-6487	1	Decal-Throttle

Fuel System and Carburetor Assembly

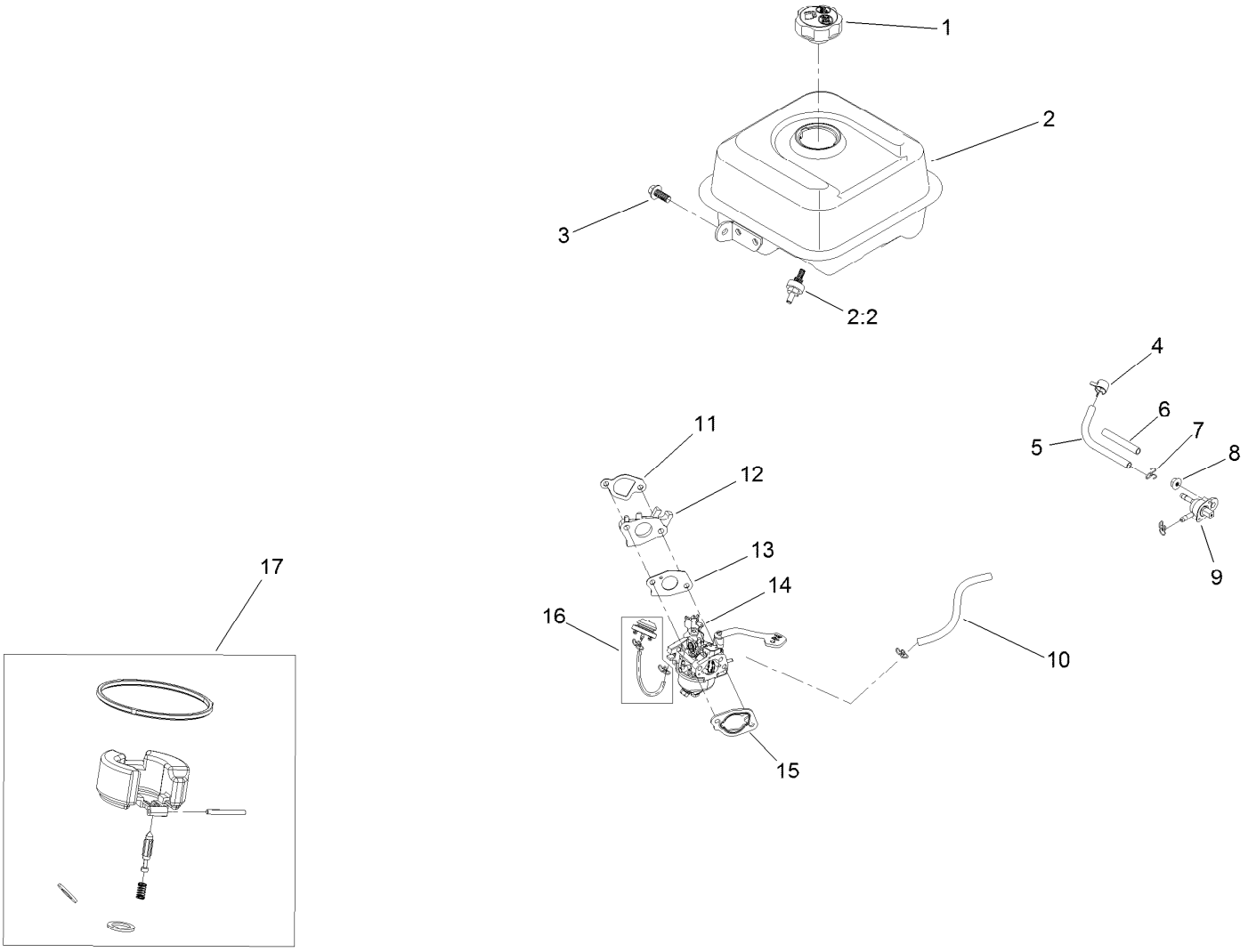

Fuel System and Carburetor Assembly (continued)

Ref.	Part Number	Qty.	Description
1	133-9823	1	Cap-Fuel
2	133-1553	1	Fuel Tank And Filter ASM
2:2	127-9065	1	Filter-Fuel
3	121-0294	1	Screw-HHF
4	127-9120	1	Clamp-Hose
5	133-1556	1	Hose-Fuel
6	133-9997	1	Sleeve-Abrasion
7	121-0087	3	Clamp-Hose
8	120-4236	1	Nut-Flange
9	127-9117	1	Valve-Fuel
10	127-9489	1	Hose-Fuel
11	133-1531	1	Gasket-Carburetor
12	133-1532	1	Insulator-Carburetor
13	133-1533	1	Gasket-Carburetor
14	133-1534	1	Carburetor ASM
15	121-0080	1	Gasket-Carburetor
16	127-9079	1	Primer Kit
17	127-9395	1	Internal Carb Service Kit
99	133-9937	1	High Altitude Kit ●

● Not illustrated

Intake and Exhaust Assembly

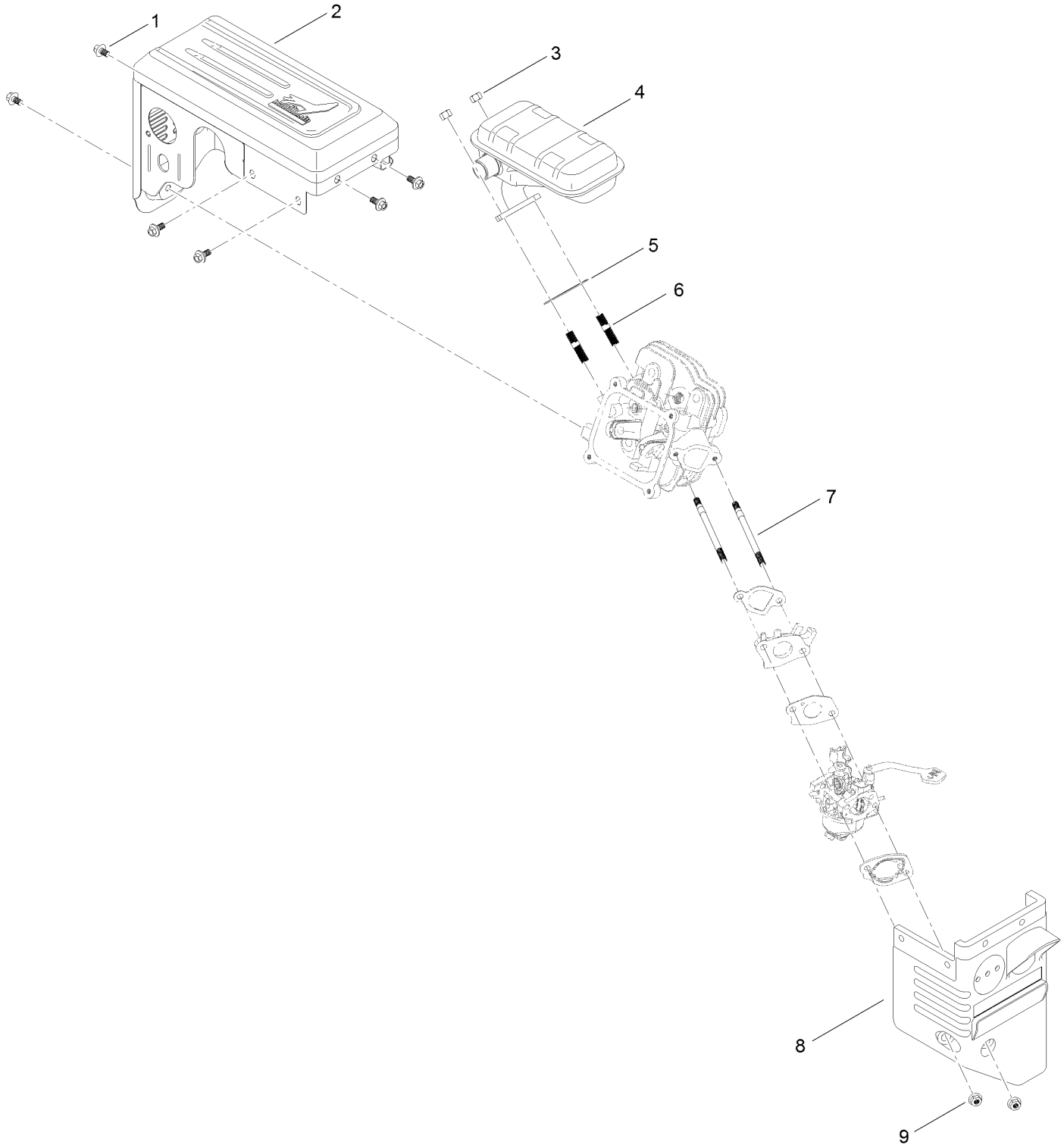

Intake and Exhaust Assembly (continued)

Ref.	Part Number	Qty.	Description
1	121-0294	6	Screw-HHF
2	127-9491	1	Muffler Cover ASM
3	121-0199	2	Nut-HH
4	127-9490	1	Muffler ASM
5	133-1539	1	Gasket-Exhaust
6	121-0464	2	Stud-Exhaust
7	121-4112	2	Stud-Intake
8	127-9112	1	Box-Heater
9	121-0308	2	Nut-Flange

Ignition and Electrical Assembly

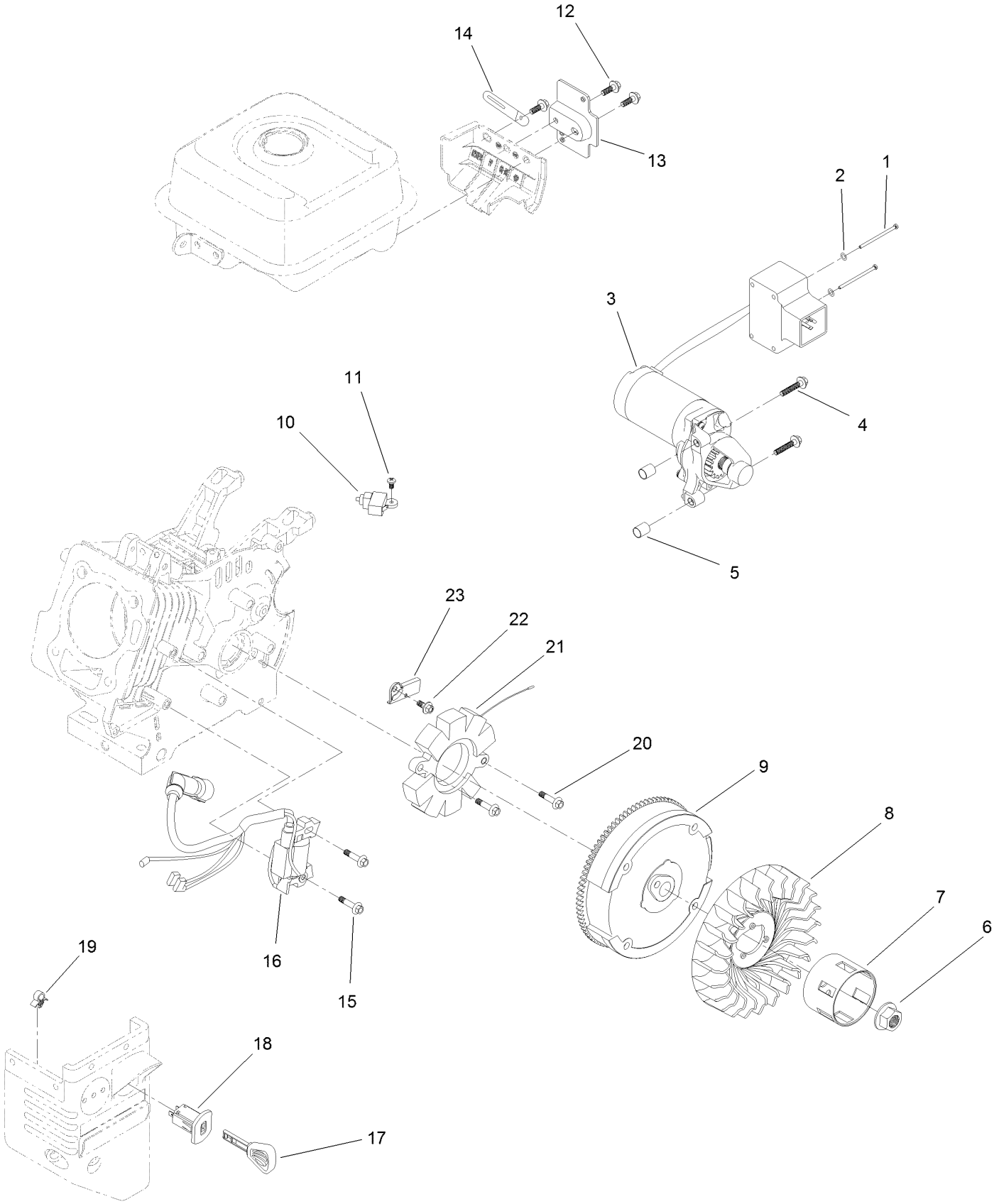

Ignition and Electrical Assembly (continued)

Ref.	Part Number	Qty.	Description
1	121-0306	2	Screw-Bhp
2	121-0312	2	Washer-Plain
3	133-9999	1	Motor-Starter
4	133-1546	2	Screw-Flange
5	121-0055	2	Pin-Dowel
6	121-0047	1	Nut-Flange
7	133-1527	1	Cup-Starter
8	133-1526	1	Fan-Cooling
9	127-9484	1	Flywheel ASM
10	121-0284	1	Switch-Kill, Engine
11	120-4461	1	Screw-PPH
12	127-9123	3	Screw-HHF
13	133-1554	1	Bracket-Switchbox, Starter
14	121-0017	1	Clip-Harness, Wire
15	121-0097	2	Screw-HHF
16	133-9996	1	Ignition Coil ASM
17	117-7728	1	Key
18	121-0283	1	Switch-Key
19	121-0326	1	Clip
20	121-0196	2	Screw-HHF
21	127-9485	1	Alternator
22	121-0116	1	Screw-HHF
23	127-9486	1	Clamp-Wire, Charge

Crankcase Assembly

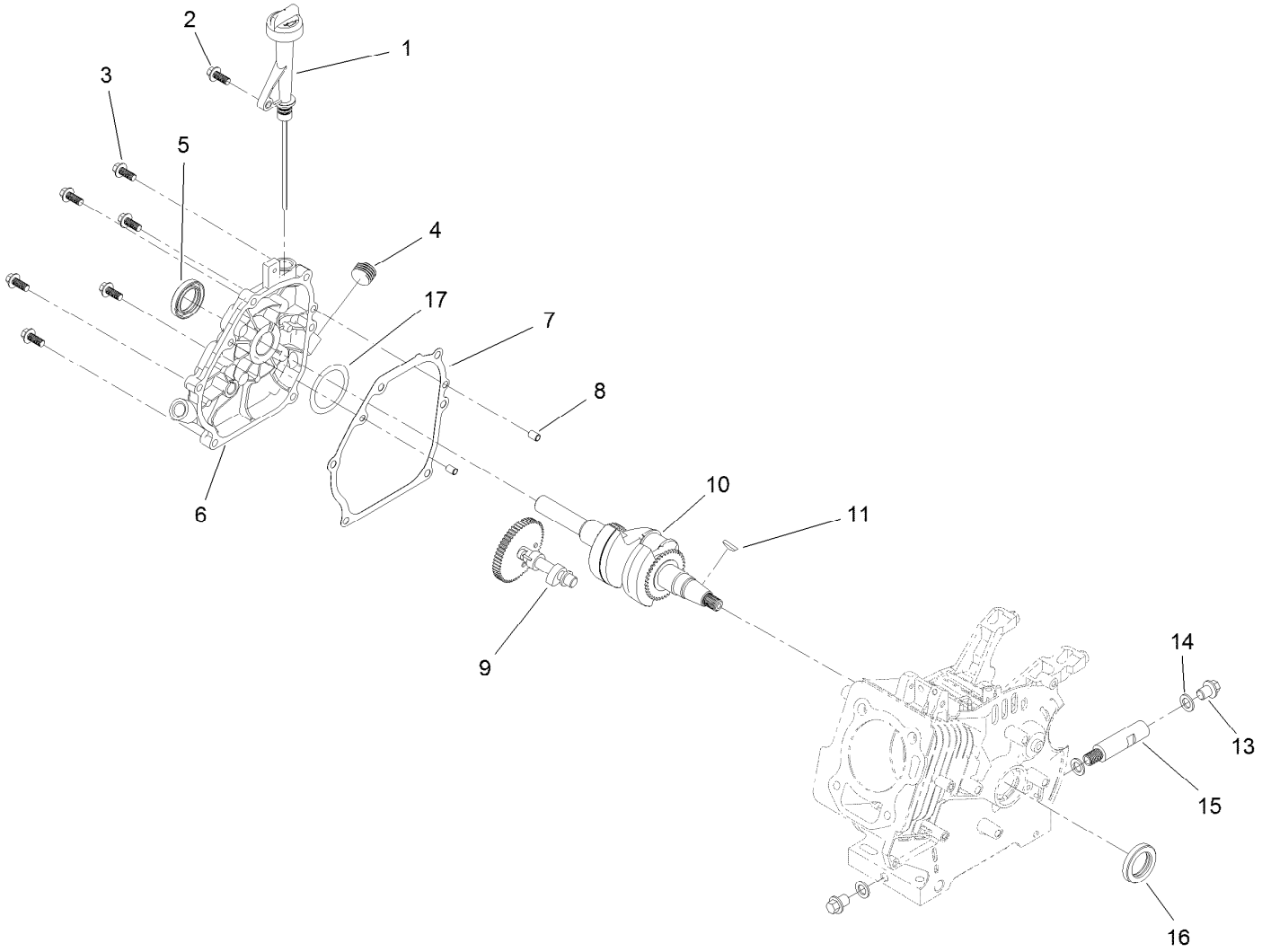

Crankcase Assembly (continued)

Ref.	Part Number	Qty.	Description
1	133-9866	1	Oil Fill Assembly
2	127-9123	1	Screw-HHF
3	121-4114	6	Screw-HHF
4	133-9805	1	Plug-Drain
5	133-1516	1	Seal-Oil
6	133-9865	1	Cover-Crankcase
7	127-9493	1	Gasket-Cover, Crankcase
8	121-0054	2	Pin-Dowel
9	133-9991	1	Camshaft ASM
10	127-9495	1	Crankshaft
11	120-4320	1	Key-Woodruff
13	121-0030	2	Screw-HHF
14	121-0048	3	Washer-Plain
15	127-9104	1	Tube-Drain, Oil
16	133-9864	1	Seal-Oil
17	133-9863	1	Washer-Thrust

Governor Assembly

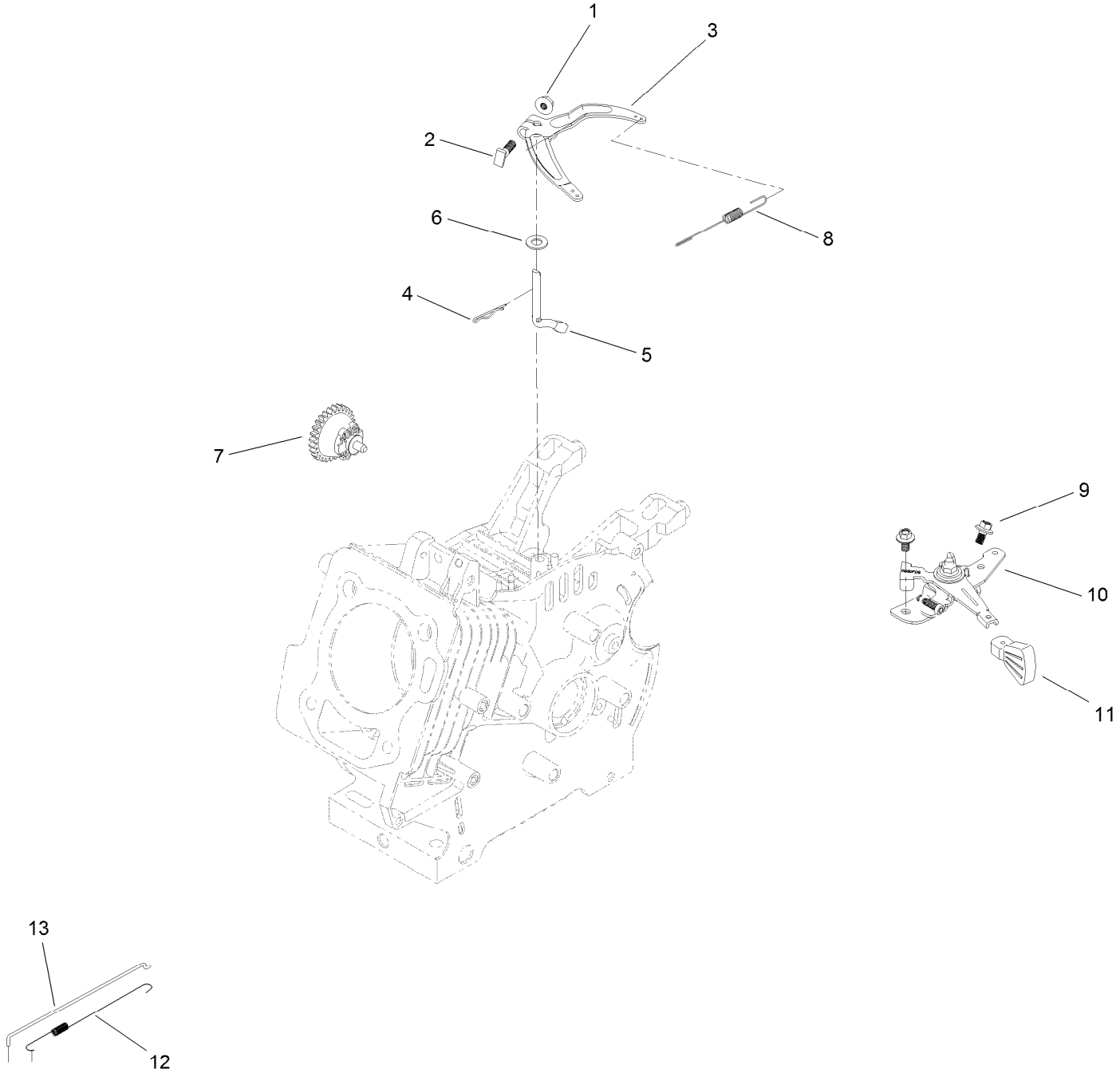

Governor Assembly (continued)

Ref.	Part Number	Qty.	Description
1	120-4236	1	Nut-Flange
2	120-4238	1	Bolt-Arm, Governor
3	127-9482	1	Arm-Governor
4	120-4256	1	Pin-Hair
5	133-9995	1	Shaft-Governor
6	121-0498	1	Washer-Plain
7	127-9994	1	Glass-Door, RH
8	127-9483	1	Spring-Governor
9	121-0116	2	Screw-HHF
10	133-1555	1	Throttle Control ASM
11	121-0269	1	Knob-Control, Throttle
12	133-1536	1	Spring-Return, Throttle
13	133-1535	1	Rod-Governor

Piston and Head Assembly

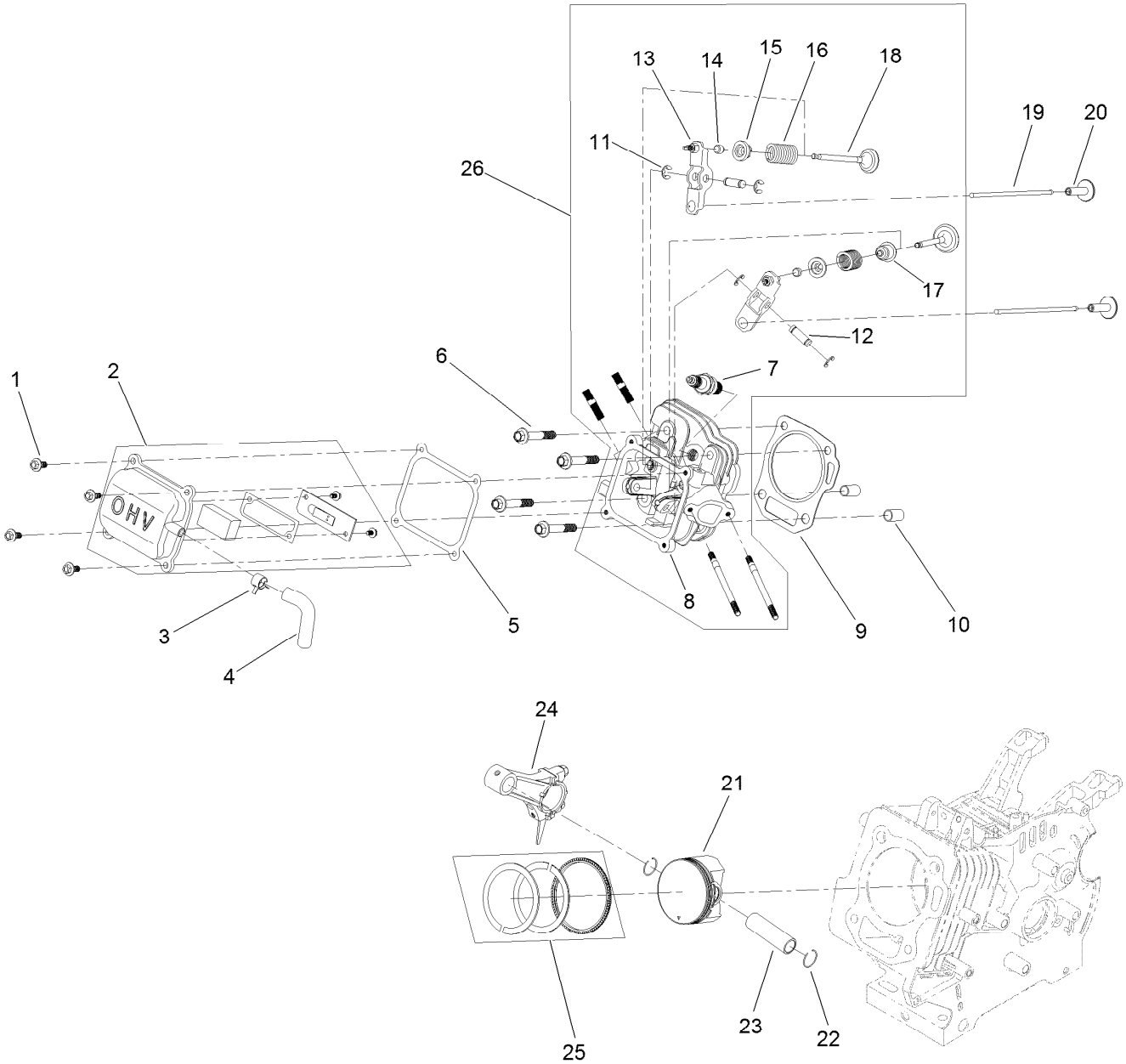

Piston and Head Assembly (continued)

Ref.	Part Number	Qty.	Description
1	120-4454	4	Screw-HHF
2	133-1500	1	Valve Cover ASM
3	133-1558	1	Clamp-Hose
4	133-9990	1	Tube-Breather
5	133-1507	1	Gasket-Cover, Valve
6	133-1508	4	Screw-Flange
7	81-3250	1	Spark Plug
8	133-1509	1	Head-Cylinder
9	133-1510	1	Gasket-Head
10	120-4200	2	Pin-Dowel
11	133-1511	4	E-Clip
12	133-1512	2	Pin-Arm, Rocker
13	133-1513	2	Rocker Arm ASM
14	121-4116	2	Rotator-Valve
15	121-4117	2	Retainer-Spring, Valve
16	127-9014	2	Spring-Valve
17	121-4202	1	Seal-Stem, Valve
18	133-1515	1	Set-Valve
19	133-1514	2	Rod-Push
20	127-9015	2	Tappet-Valve
21	133-1522	1	Piston
22	121-0313	2	Clip-Pin, Piston
23	121-4128	1	Pin-Piston
24	121-4123	1	Connecting Rod ASM
25	133-1521	1	Set-Ring, Piston
26	133-9867	1	Complete Head ASM

Blower Housing and Shrouds Assembly

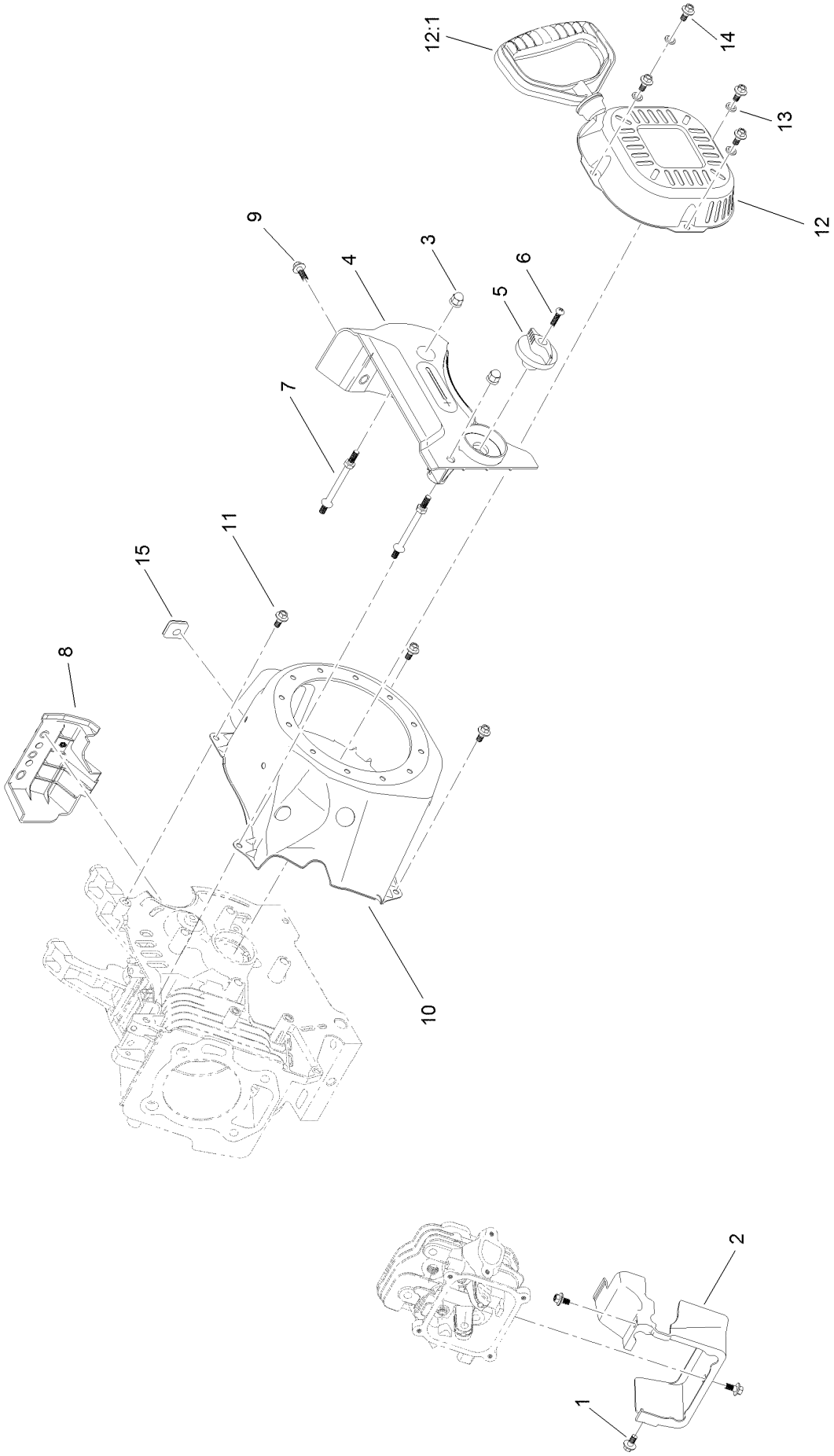

Blower Housing and Shrouds Assembly (continued)

Ref.	Part Number	Qty.	Description
1	121-0116	3	Screw-HHF
2	133-1530	1	Shroud-Head
3	127-9383	2	Nut-Acorn
4	133-1557	1	Panel-Control, Front
5	121-0268	1	Knob-Valve, Fuel
6	121-0305	1	Screw-Bhp
7	127-9110	2	Stud-Mount
8	133-1543	1	Panel-Side, Engine
9	127-9123	1	Screw-HHF
10	133-1528	1	Shroud-Flywheel
11	121-0294	3	Screw-HHF
12	127-9487	1	Recoil ASM
12:1	121-0287	1	Handle-Recoil
13	127-9380	4	Washer-Plain
14	127-9031	4	Screw-HHF
15	133-1548	1	Grommet-Rubber

Chute Assembly

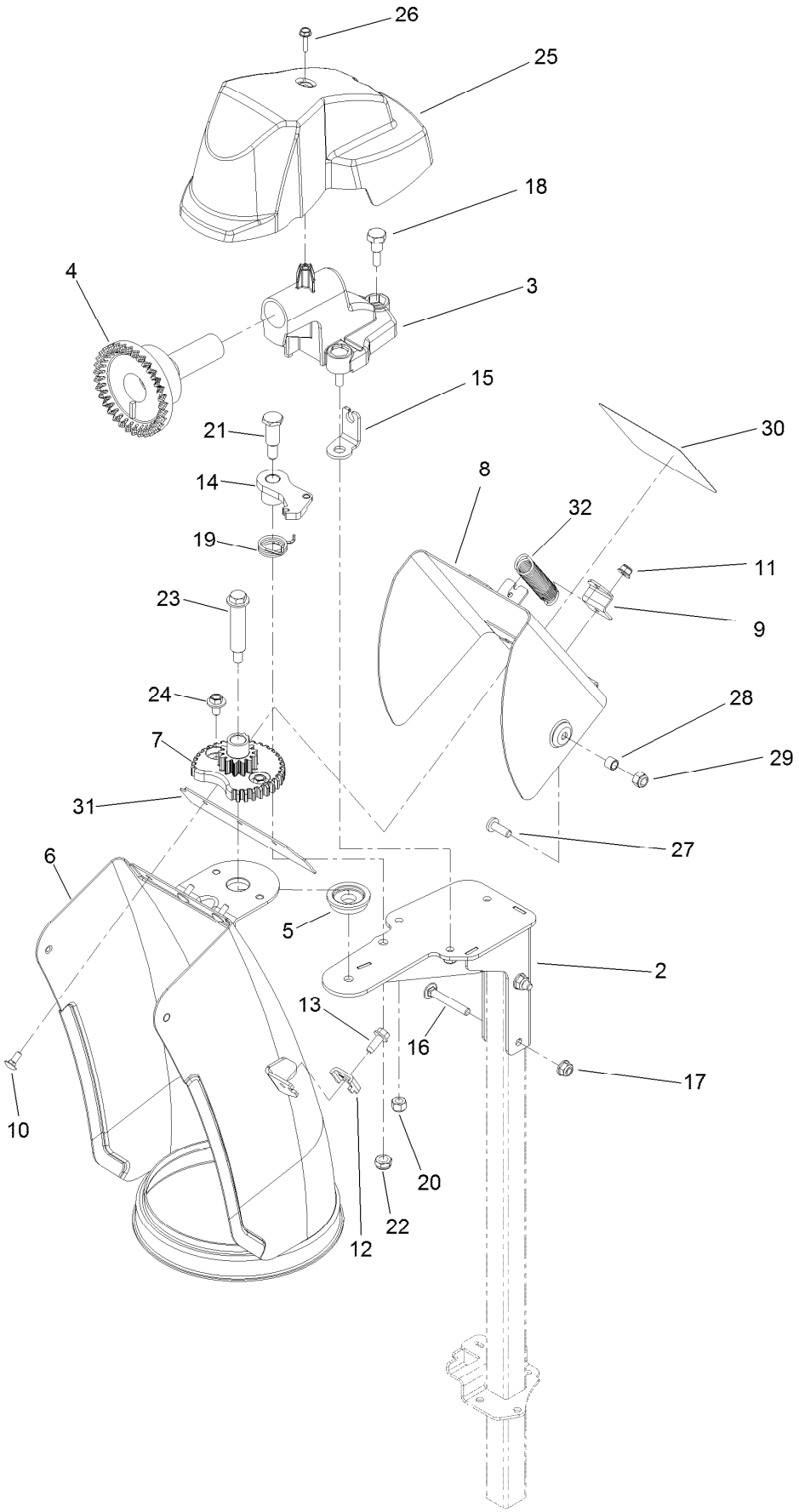

Chute Assembly (continued)

Ref.	Part Number	Qty.	Description
2	138-3605-03	1	Support-Chute
3	138-3606	1	Mount-Gear, Face
4	106-4471	1	Gear-Face
5	106-4422	1	Spacer-Chute
6	138-3611-01	1	Chute Weld ASM
7	106-4472	1	Gear-Chute
8	138-3615-01	1	Deflector Weld ASM
9	138-3612-01	1	Bracket-Spring
10	135-1929	3	Bolt-CARR
11	138-0719	3	Nut-HF
12	136-7191	1	Clamp-Cable
13	137-3043	1	Screw-HWH
14	106-4476	1	Latch-Chute
15	138-3607	1	Anchor-Cable
16	120-9698	2	Bolt-CARR
17	119-4040	2	Nut-Flange, NI
18	136-7197	3	Screw-Shoulder
19	108-7315	1	Spring-Torsion
20	137-3088	3	Nut-Hex
21	137-3103	1	Screw-Shoulder, HH
22	137-3089	3	Nut-Hex
23	136-7199	3	Bolt-Shoulder
24	46-6810	2	Screw And Washer ASM
25	138-3627	1	Cover-Chute, Gear
26	98-1375	1	Screw-HWH
27	138-0689	1	Screw-PH
28	138-3678	1	Spacer
29	137-3094	1	Nut-Hex
30	137-6198	1	Decal-Danger
31	138-3671	1	Gasket-Deflector
32	138-8493	1	Spring-Chute, Upper

Lever Chute Control Assembly

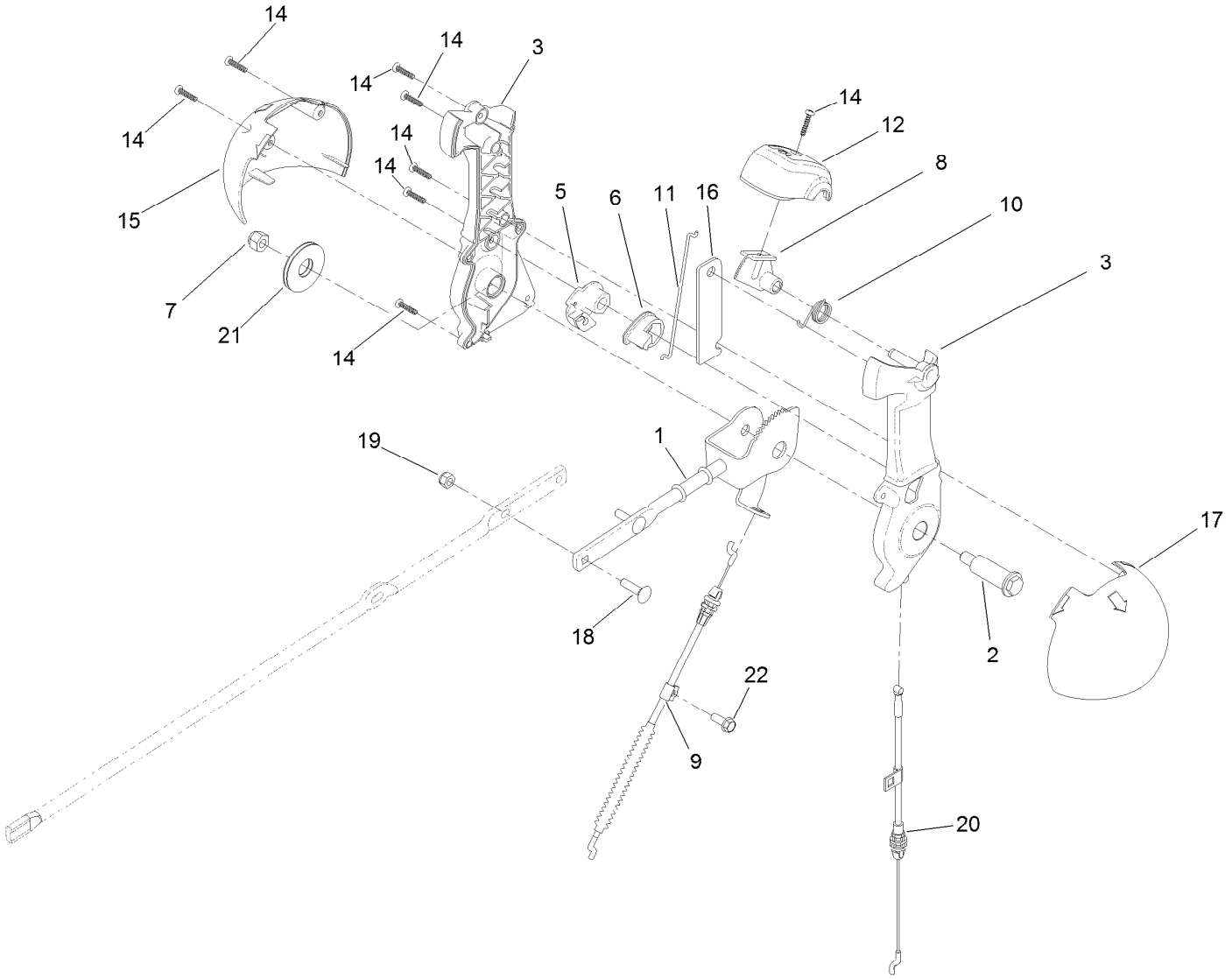

Lever Chute Control Assembly (continued)

Ref.	Part Number	Qty.	Description
1	138-0662	1	Rod-Control, Chute
2	138-0659	1	Screw-Shoulder, HWH
3	139-1552	1	Chute Control Lever ASM
5	105-9988	1	Lever-Cable, Deflector
6	106-7310	1	Pawl-Latch
7	137-3087	1	Nut-Hex
8	137-6238	1	Trigger-Latch
9	138-3672	1	Cable-Control, Deflector
10	105-9982	1	Spring-Torsion
11	138-0688	1	Link-Latch
12	137-6239	1	Cap-Lever
14	94-4496	8	Screw-PPH
15	136-6677	1	Globe-Quickstick, RH
16	136-6632	1	Plate-Stiffner
17	136-6678	1	Globe-Quickstick, LH
18	137-3056	3	Bolt-CARR
19	137-3094	3	Nut-Hex
20	138-3673	1	Cable-Release, Chute
21	138-0744	1	Washer-Friction, Composite
22	32144-85	1	Screw-HWH

Handle Assembly

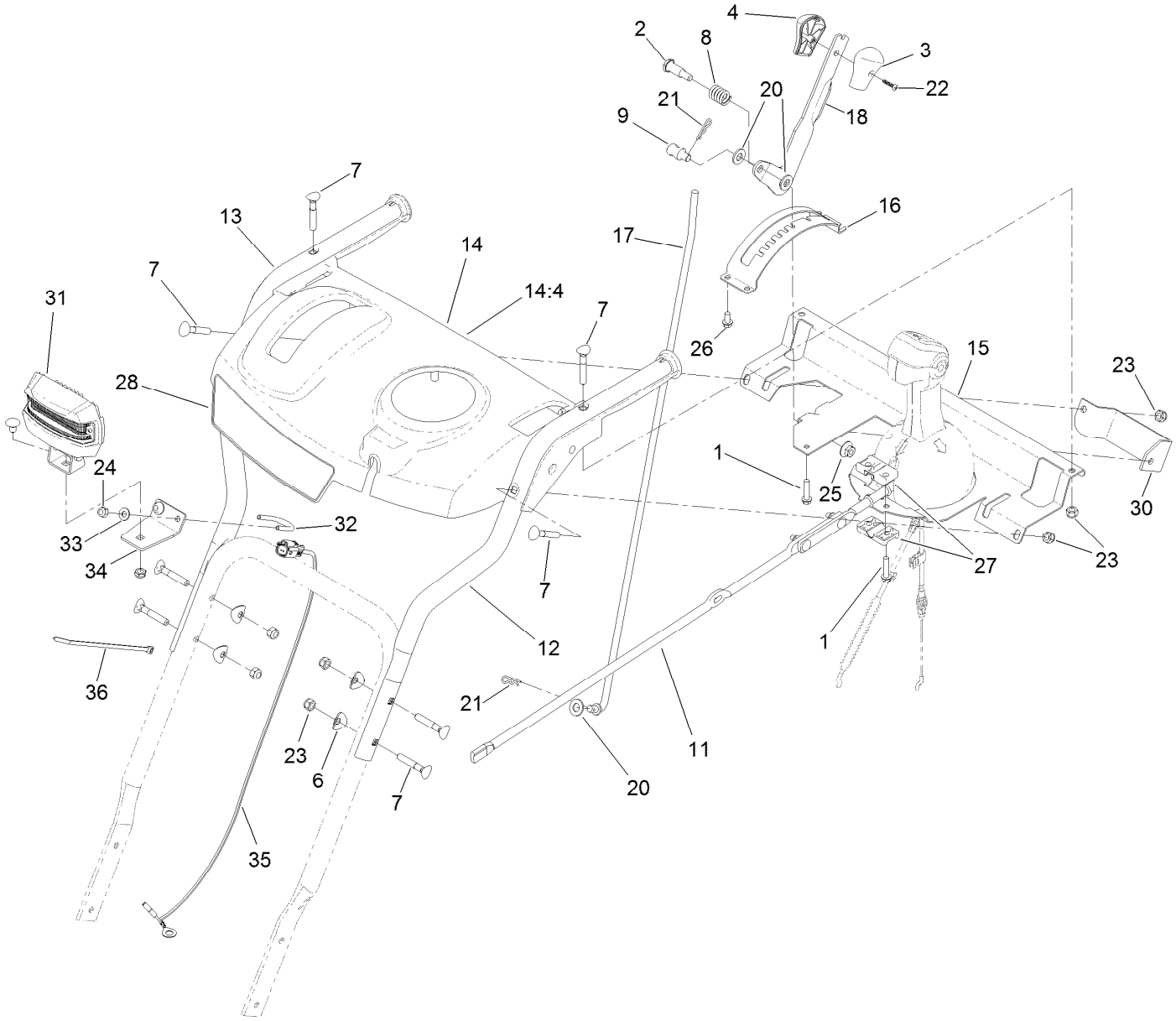

Handle Assembly (continued)

Ref.	Part Number	Qty.	Description
1	137-3100	3	Screw-Plastite, HWH
2	137-3103	1	Screw-Shoulder, HH
3	105-9999	1	Knob-Shift, LH
4	106-4423	1	Knob-Shift, RH
6	137-3009	4	Washer-Cup
7	137-3107	8	Screw-Handle
8	136-7121	1	Spring-Compression
9	136-7193	1	Trunnion-Rod
11	138-3635	1	Rod-Chute
12	120-7173-03	1	Handle-Upper, LH
13	120-7174-03	1	Handle-Upper, RH
14	138-8487	1	Control Panel ASM
14:4	121-1240	1	Decal-Safety
15	138-3676-03	1	Support-Panel, Control
16	120-9258-03	1	Mount-Selector, Speed
17	136-7163	1	Rod-Selector, Gear
18	121-1242-03	1	Selector-Speed

Ref.	Part Number	Qty.	Description
20	131-8667	3	Washer-Thrust
21	137-3083	2	Pin-Hair
22	94-4496	1	Screw-PPH
23	137-3093	8	Nut-Hex
24	137-3094	2	Nut-Hex
25	137-3038	1	Nut-HF
26	46-8093	4	Screw-Plastite
27	105-9987	2	Support-Rod
28	139-3693	1	Decal-Console
30	120-2301-03	1	Plate-Support, Shift
31	138-0670	1	LED Light ASM
32	136-7120	1	Clamp-Light
33	137-3072	2	Washer-Plain
34	127-5961-03	1	Bracket-Light
35	138-3658	1	Harness-Wire
36	614249	1	Tie-Cable

Control Assembly

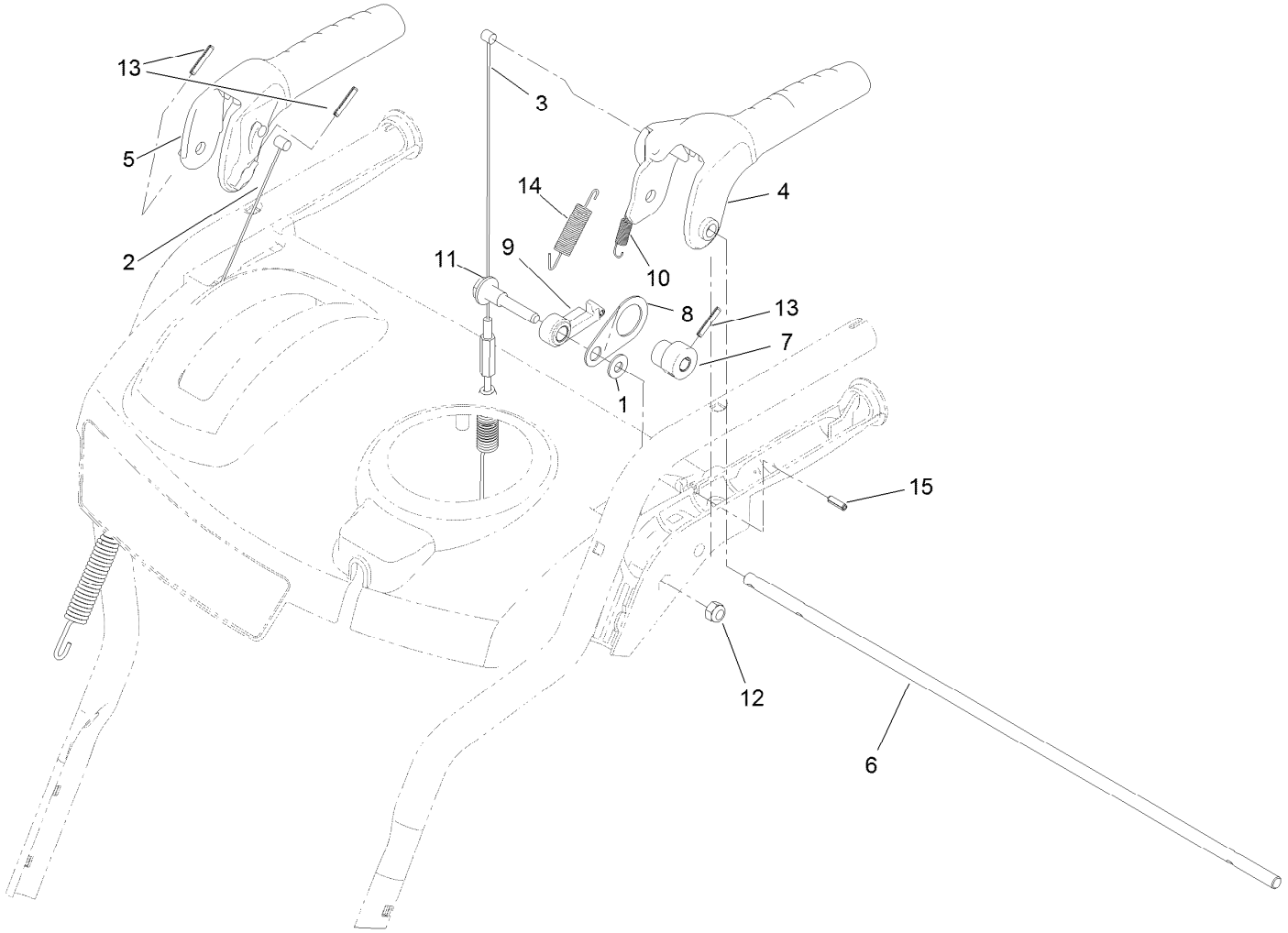

Control Assembly (continued)

Ref.	Part Number	Qty.	Description
1	98-3499	1	Washer-Flat
2	121-6812	1	Cable-Auger
3	121-6813	1	Cable-Traction
4	121-1200	1	Handle-Control, Traction
5	121-1201	1	Handle-Control, Auger
6	136-7125	1	Rod-Lockout
7	121-1203	1	Cam-Lockout
8	136-7160	1	Link-Lockout
9	121-1205	1	Latch-Lockout
10	136-7161	1	Spring-Lockout, Handle
11	136-7194	1	Screw-Shoulder
12	137-3093	1	Nut-Hex
13	137-3035	3	Pin-Spring
14	136-7162	1	Spring-Return, Lever
15	32121-2	1	Pin-Roll, Slotted

Attachments and Accessories

For 38819 Power Max 826 OXE Snowthrower

Product Name	Model/Part
Weight Kit	107-3815
Snow Cab Kit	127-5960
Engine Maintenance Kit	138-0702
Non-Marking Skid Kit	38211
Heavy-Duty Skid Kit	38212
Drift Breaker Kit	38213
Toro Snow Oil 0W30 Synthetic 20-Ounce Bottle	38913
Toro 2-Stage Cover	490-7466
Plain 2-Stage Cover	490-7467

Notes:

TORO®

Count on it.