FORM NO. 3313-403

TORO®

MODEL NO. 66-6200

INSTALLATION INSTRUCTIONS

SNOW CAB

Since this instruction sheet covers only a minimal amount of information necessary to maintain and operate your machine, we suggest that you keep this material with your Operator's Manual so that both may be referred to for instructions concerning safe operation and proper maintenance procedures.

Note: Do not tighten mounting bolts until all parts of cab have been installed.

1. Remove (2) screws securing lever cover to right handle (Fig.1).

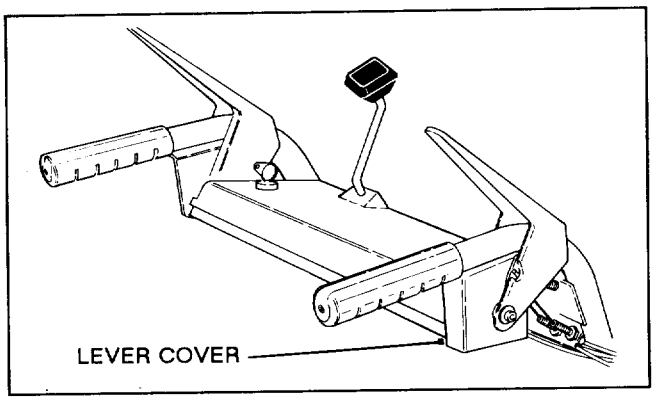

Figure 1

2. Remove (2) flange head capscrew securing control panel to handles(one on each side) and loosely secure attaching bracket base to handles with flange head capscrews removed (Fig.2).

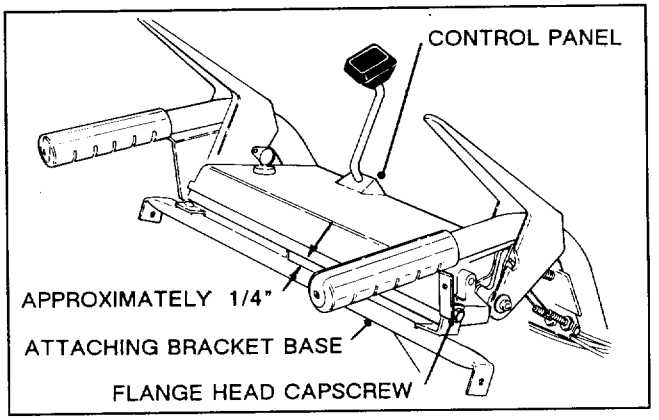

Figure 2

3. Pivot attaching bracket base rearward until there is approximately 1/4" space between bracket and control panel, then tighten flange head capscrews securing bracket to handles (Fig.2).

4. Reinstall new lever cover to right handle with (2) screws previously removed (Fig.3).

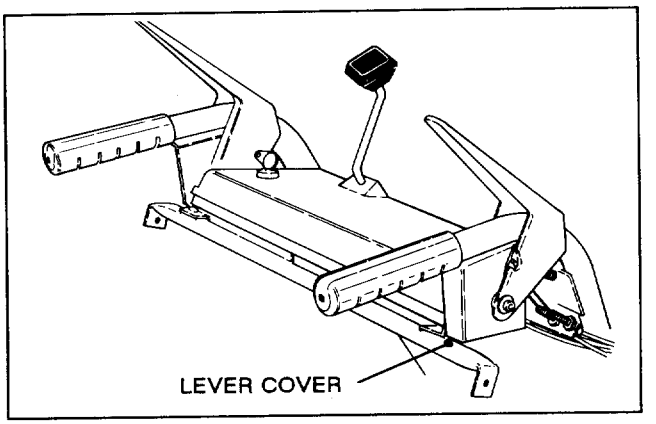

Figure 3

5. Position and secure right hand attaching bracket to attaching bracket base, as shown in fig.4, using a 1/4-20 x 3/4" lg. capscrew and locknut.

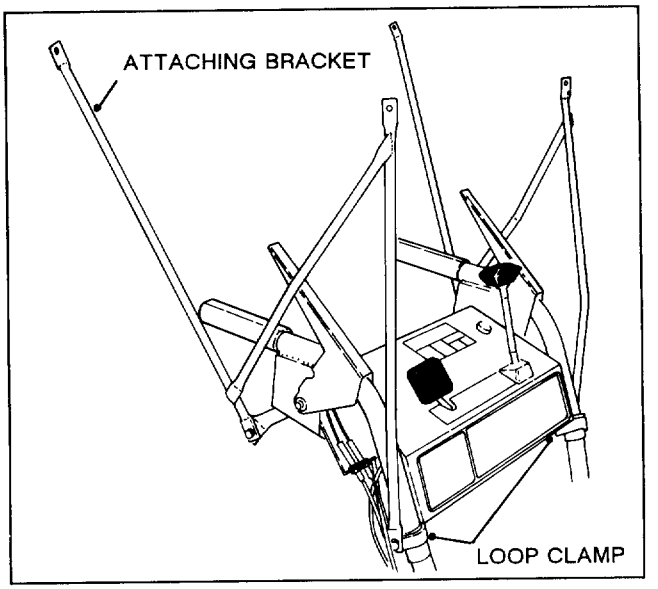

Figure 4

6. Place the 1-1/4" loop clamp around right handle just below control panel. Secure front leg of right hand attaching bracket to loop clamp with a 1/4-20 x 2" lg. capscrew and locknut. Control cables to be routed outside of clamp. Repeat procedure on left side of machine.

©The TORO Company -1987

7. Mount horizontal curved bow to front legs of attaching brackets with (2) 1/4-20 x 3/4" lg. capscrews and locknuts, as shown in fig.5. Welded clips on curved bow to be positioned between the post and attaching bracket.

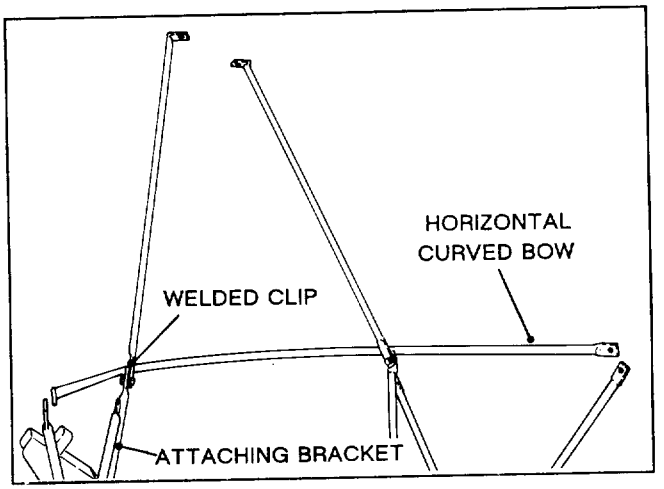

Figure 5

8. Mount each side of vertical bow (Fig.6) to attaching brackets and rear of horizontal curved bow with a 1/4-20 x 3/4" lg. capscrew, flatwasher and locknut. Capscrew head to be positioned inside of cab and flatwasher next to locknut. Vertical bow to be positioned between attaching bracket and horizontal curved bow. Tighten capscrews so vertical bow is vertical and at 90 degrees to the plane of the horizontal bow.

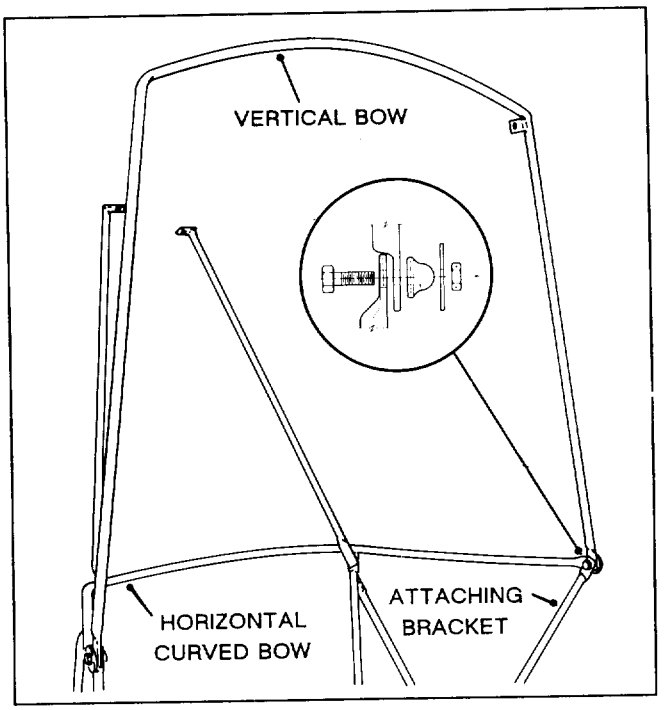

Figure 6

9. Mount the top frame to the rear vertical bow and to the upper ends of the front posts with (4) 1/4-20 x 3/4" lg. capscrews and locknuts, as shown in fig.7.

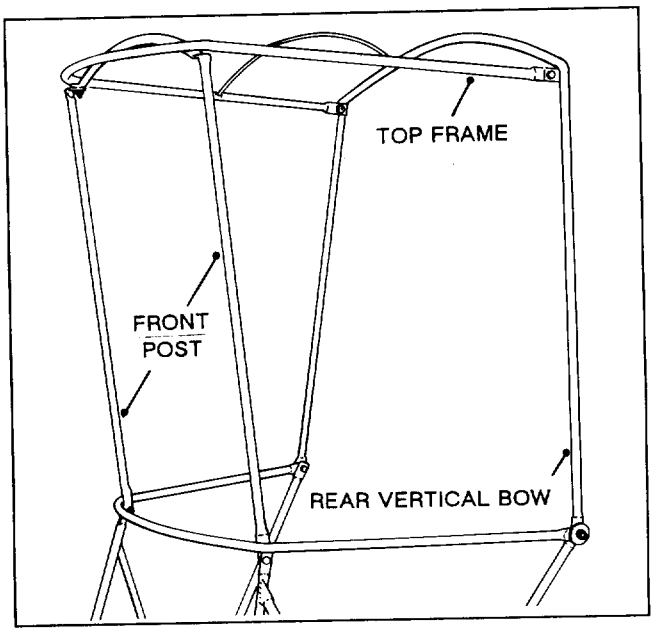

Figure 7

10. Tighten all mounting capscrews to secure assembly.

11. Carefully unfold shell and position over frame (Fig.7).

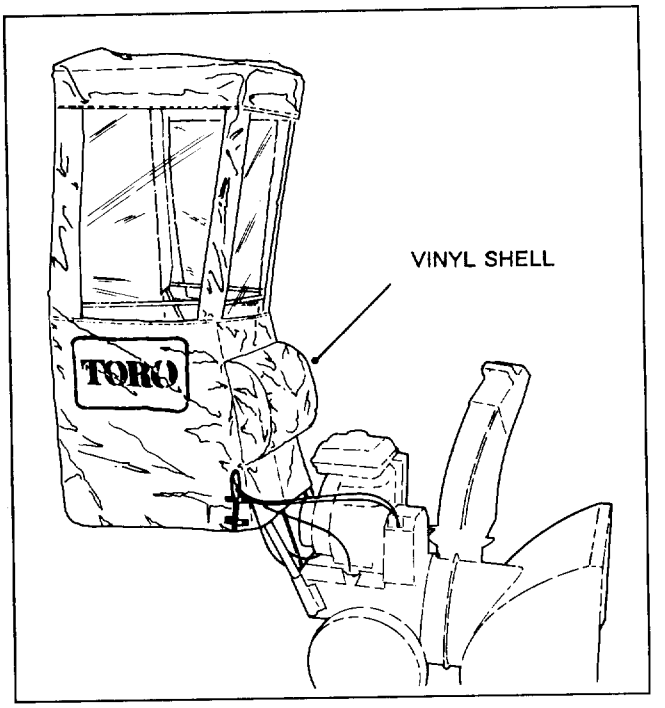

Figure 8

12. Tie bottom of shell around control cables (Fig.7).

13. Snap vinyl shell around frame until secured in place (Fig.7).

Note: If headlight is to be mounted to snowthrower. cut two slots in cab directly above mounting holes in handle. Disconnect wire and run through hole in cab. Secure headlight to handle