Form No. 3364-996 Rev C

TORO®

Count on it.

Parts Catalog

ProCore® 648 Aerator

Model No. 09200—Serial No. 310000001 and Up

Register at www.Toro.com.
Original Instructions (EN)

CE

3364-996 C

Ordering Replacement Parts

To order replacement parts, please supply the part number, the quantity, and the description of each part desired.

Understanding Reference Numbers

Each identified part in an illustration has a reference number. The reference number for a part also appears in the parts list, along with other information about the part.

This catalog uses two special reference number formats, one to indicate parts in a service assembly and another to indicate the quantity of a given part in an illustration.

Service Assembly Reference Numbers

Parts in service assemblies have reference numbers in the form a:b. The a represents the reference number of the entire service assembly and the b represents a sequential number unique to each part within the service assembly.

For example, a wheel assembly might be identified by reference number 6, the tire by 6:1, the valve by 6:2, and the wheel by 6:3. When you order the assembly identified by reference number 6, you receive all parts identified by reference numbers 6:1,6:2, and 6:3. However, you may also order any part individually. Reference numbers of this type appear in illustration and in parts lists.

Reference Numbers Indicating Quantity

In an illustration, if a reference number indicates more than one part, the reference number has the form nX y. The n represents the quantity of the part, the X is the multiplication symbol, and the y represents the reference number.

For example, in an illustration, the reference number 2X 37 means that two of the parts identified by reference number 37 are indicated.

Contents

Control Bail Assembly 4
Front Handle Assembly 5
Front Fork Assembly 6
Fuel Tank Assembly 7
Console Assembly 8
Console Electronics Assembly 9
Line Marker Assembly 10
Engine and Muffler Assembly 11
Rear Hood and Muffler Shield Assembly 12
Shield Assembly No. 107-7546 13
Jackshaft Hood Assembly 14
Primary Belt Drive Assembly 15
Secondary Belt Drive Assembly 16
Hydro Control Assembly 17
Hydrostat Pump Assembly 18
Hydrostat Pump Assembly No. 115-4700 19
Lift System Assembly 20
Hydraulic Cylinder Assembly No. 105-1030 21
Control Manifold Assembly No. 106-8802 22
Wheel and Motor Assembly 23
Hydraulic Motor Assembly No. 106-8807 24
Hydraulic Motor Assembly No. 106-8806 25
Hydraulic Motor Assembly No. 106-8808 26
Brake Latch Assembly 27
Hydraulic Tank Assembly 28
Hydraulic Fitting Assembly 29
Hardline and Hose Assembly 30
H-Frame Assembly 31
Coring Head Crank No. 1 and 2 Assembly 32
Coring Head Crank No. 3 and 4 Assembly 33
Coring Head Crank No. 5 and 6 Assembly 34
Coring Head Assembly for Rotolinks 35
Coring Head Assembly for Turfguards 36
Depth Control Assembly 37
Depth Actuator Assembly 38
Tire Scraper Assembly (Model 09225) 39
Attachments and Accessories 40

© 2019—The Toro® Company
8111 Lyndale Avenue South
Bloomington, MN 55420

Contact us at www.Toro.com.
Printed in the USA.
All Rights Reserved

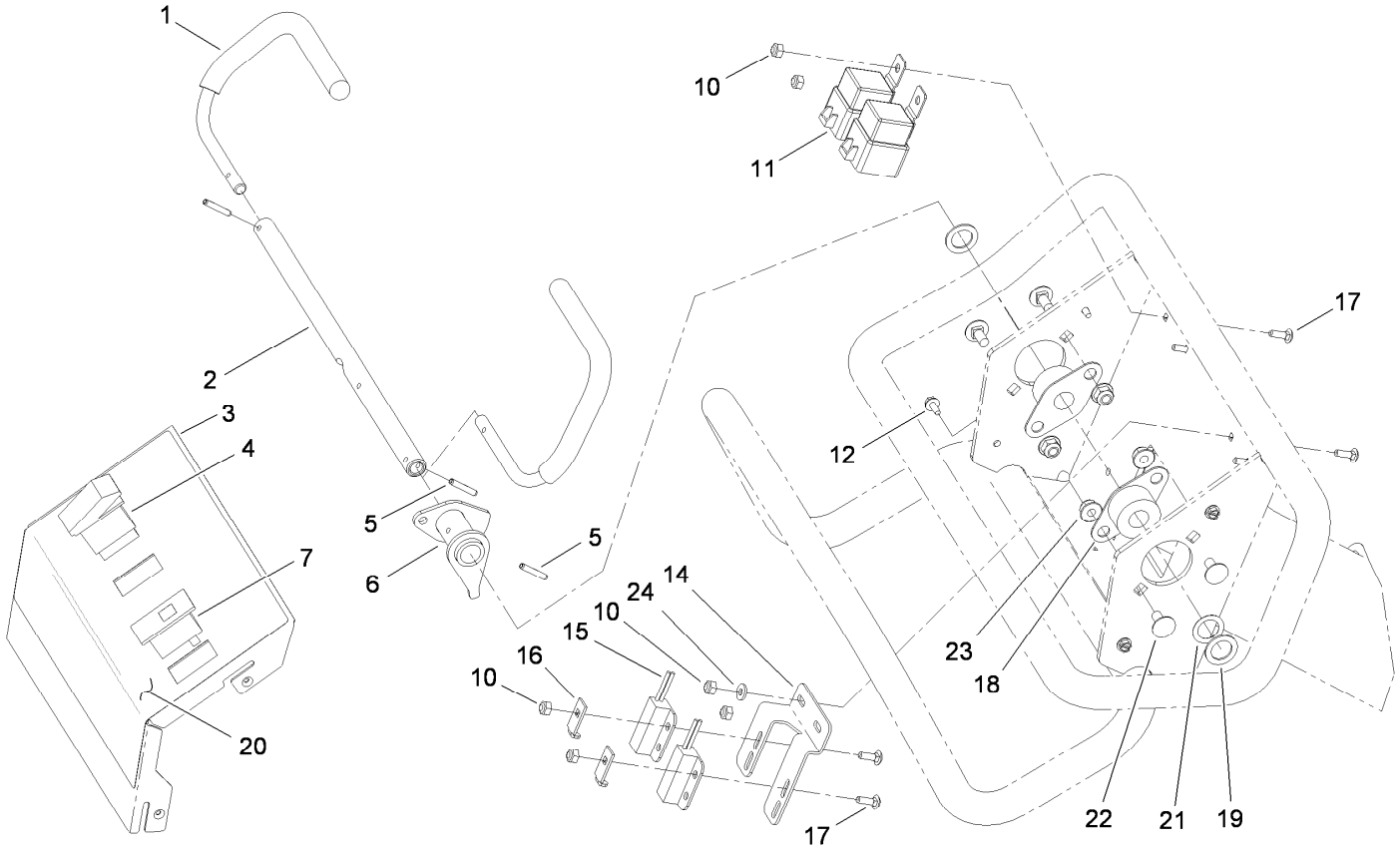

Control Bail Assembly

Ref.	Part Number	Qty.	Description
1	115-4719	2	Bail-Traction
2	107-3350	1	Shaft-Pivot, Bail V
3	105-1183-03	1	Cover-Handle, Control
4	106-8921	1	Switch-Rocker, Off-On
5	32121-45	3	Pin-Spring
6	107-3351	1	Bail Lever ASM
7	99-7410	1	Indicator-Light, Low-Oil Pressure
10	3296-2	6	Nut-Lock, NI
11	99-7430	2	Relay-Mini
12	32104-60	4	Screw-HWH
14	107-3361	1	Mount-Switch
15	100-1270	2	Switch-Proximity
16	100-4872	2	Plate-Switch, Neutral
17	3229-34	6	Screw-CARR
18	256-236	2	Bearing-Mount, Flange
19	3256-69	2	Washer-Flat
20	115-4716	1	Decal-Handle Control Panel, CE
21	108-2100	1	Washer-Spring, Curved
22	3230-18	4	Screw-CARR
23	104-8300	4	Nut-HF, NI
24	3256-14	2	Washer-Flat

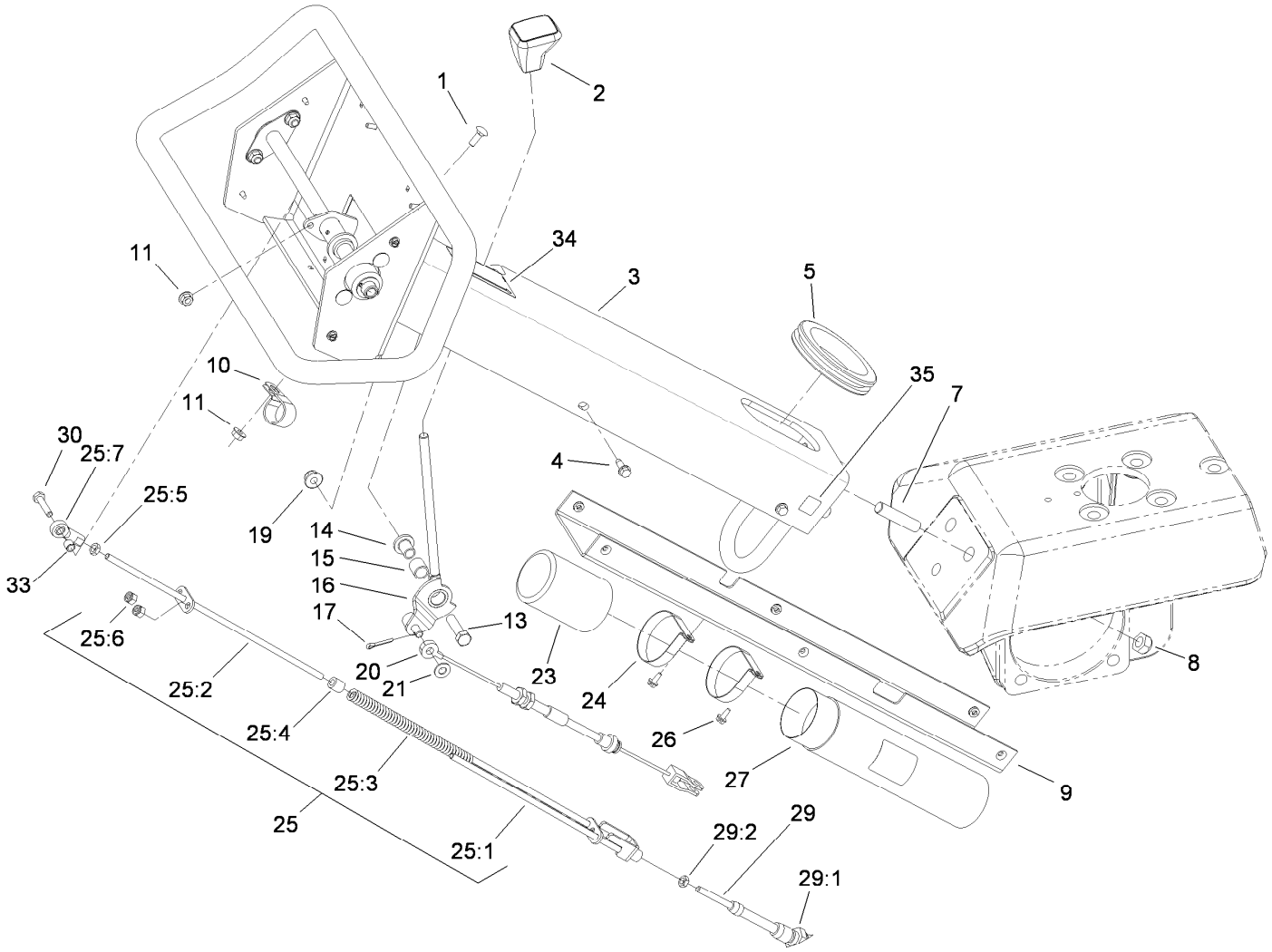

Front Handle Assembly

Ref.	Part Number	Qty.	Description
1	3229-1	1	Bolt-CARR
2	65-8970	1	Knob-Shift
3	115-4723-01	1	Handle-Control
4	32144-44	6	Screw-HWH, Thread Roll
5	240-8	1	Grommet-Rubber
7	80-8680	3	Stud
8	3296-19	3	Nut-Hex
9	107-3363-03	1	Cover-Lower, Handle
10	2412-39	1	Clamp-R
11	32128-33	2	Nut-HF
13	323-8	1	Screw-HH
14	80-7200	1	Spacer-Brake
15	256-206	1	Bushing
16	86-8420	1	Lever-Brake
17	3272-10	1	Pin-Cotter
19	104-8301	1	Nut-HF, NI
20	106-8896	1	Cable-Latch, Parking
21	3256-23	1	Washer-Plain
23	104-7048	1	Cap-Housing

Ref.	Part Number	Qty.	Description
24	2412-120	2	Clamp-R
25	115-6661	1	Rod ASM
25:1	107-3360	1	Spring Retainer ASM
25:2	107-3354	1	Override Rod ASM
25:3	107-3373	1	Spring-Compression
25:4	22-7810	1	Spacer
25:5	3220-1	1	Nut-Jam
25:6	3296-3	2	Nut-Lock
25:7	2411-41	1	Rod End-Ball Joint
26	32104-60	2	Screw-HWH
27	104-7050	1	Tube-Manual
29	80-7220	1	Cable-Control, Stroke
29:1	3220-6	4	Nut-Jam
29:2	3220-1	2	Nut-Jam
30	321-8	1	Screw-HH
33	99-3545	1	Spacer
34	93-9363	1	Decal-Brake, Parking
35	93-9084	3	Decal-Point, Lift

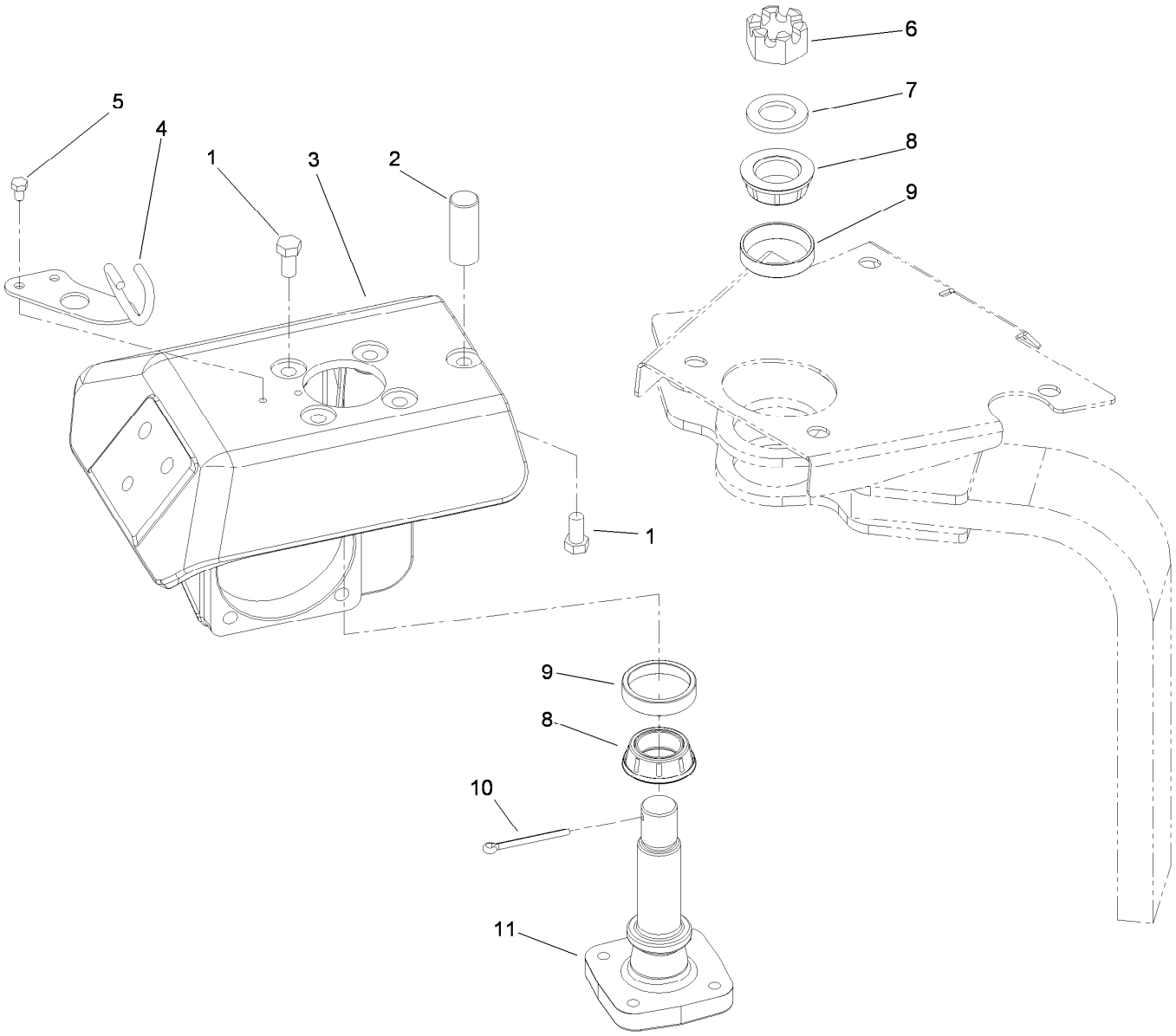

Front Fork Assembly

Ref.	*Part Number*	*Qty.*	*Description*
1	325-4	5	Screw-HH
2	106-8939	1	Stop-Steering
3	108-1252-01	1	Arm-Steering
4	106-8937	1	Cable Guide ASM
5	322-1	2	Screw-HH
6	32136-9	1	Nut-Hex, Slotted
7	107-7597	1	Washer-Plain
8	107-7589	2	Cone-Bearing (W/ Seal)
9	107-7590	2	Cup-Bearing
10	3272-37	1	Pin-Cotter
11	107-7595-03	1	Spindle-Steer

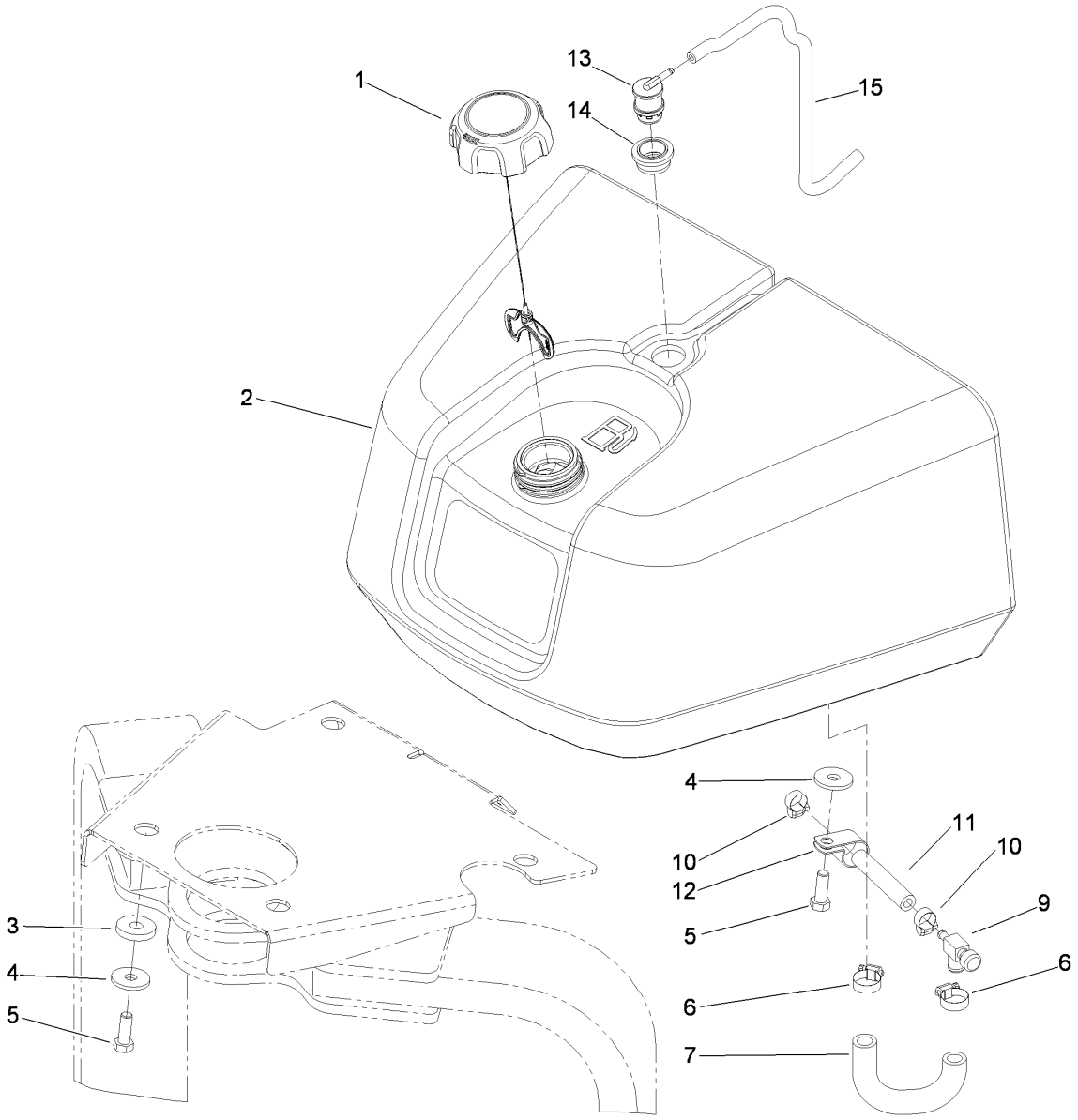

Fuel Tank Assembly

Ref.	Part Number	Qty.	Description
1	115-7788	1	Cap-Fuel
2	117-9506	1	Tank-Fuel
3	240-11	4	Bushing-Flange
4	63-8410	4	Washer
5	323-6	4	Screw-HH
6	2412-36	2	Clamp-Hose
7	108-6818	1	Hose-Fuel, Molded
9	83-1390	1	Valve-Shut-Off, Fuel
10	2412-108	2	Clamp-Worm
11	110-0047	1	Hose-Fuel
12	2412-41	1	Clamp-R
13	114-0285	1	Valve-Rollover
14	114-0284	1	Grommet
15	115-4735	1	Hose-Fuel

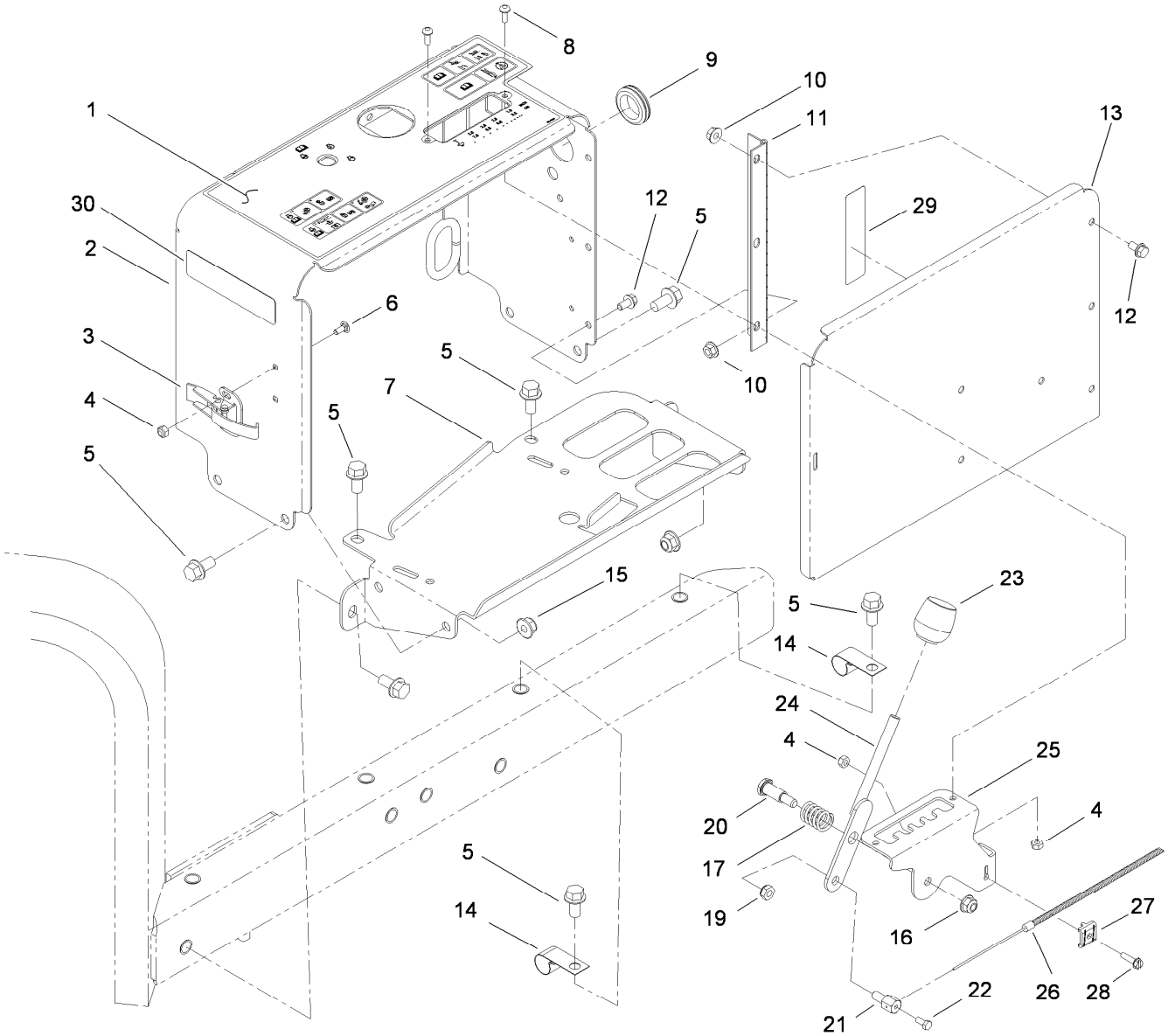

Console Assembly

Ref.	Part Number	Qty.	Description
1	106-8854	1	Decal-Console, Main
2	105-1175-01	1	Console
3	249-21	1	Clamp-Slotted
4	3296-2	6	Nut-Lock, NI
5	3234-1	10	Screw-HHF
6	104-1450	2	Bolt-CARR
7	105-1182-01	1	Base-Console
8	3250-12	3	Screw-PPH
9	240-5	1	Grommet
10	32128-33	6	Nut-HF
11	106-8908	1	Hinge-Console
12	3234-13	6	Screw-HHF
13	105-1171-01	1	Cover-Console
14	2412-150	2	Clip-J
15	104-8301	4	Nut-HF, NI

Ref.	Part Number	Qty.	Description
16	104-8300	1	Nut-HF, NI
17	20-6110	1	Spring-Compression
19	3296-20	1	Nut-Lock, NI
20	63-2650	1	Screw-Shoulder
21	98-9311	1	Swivel-Throttle
22	25-8640	1	Screw-HH
23	233-37	1	Knob
24	105-1167	1	Spacing Lever ASM
25	105-1166-03	1	Bracket-Lever, Spacer
26	105-1062	1	Cable-Control, Spacing
27	81-1690	1	Clamp-Cable
28	32105-13	1	Screw-HWH
29	107-7555	1	Decal-Block, Fuse
30	117-2718	1	Decal-Arrester, Spark

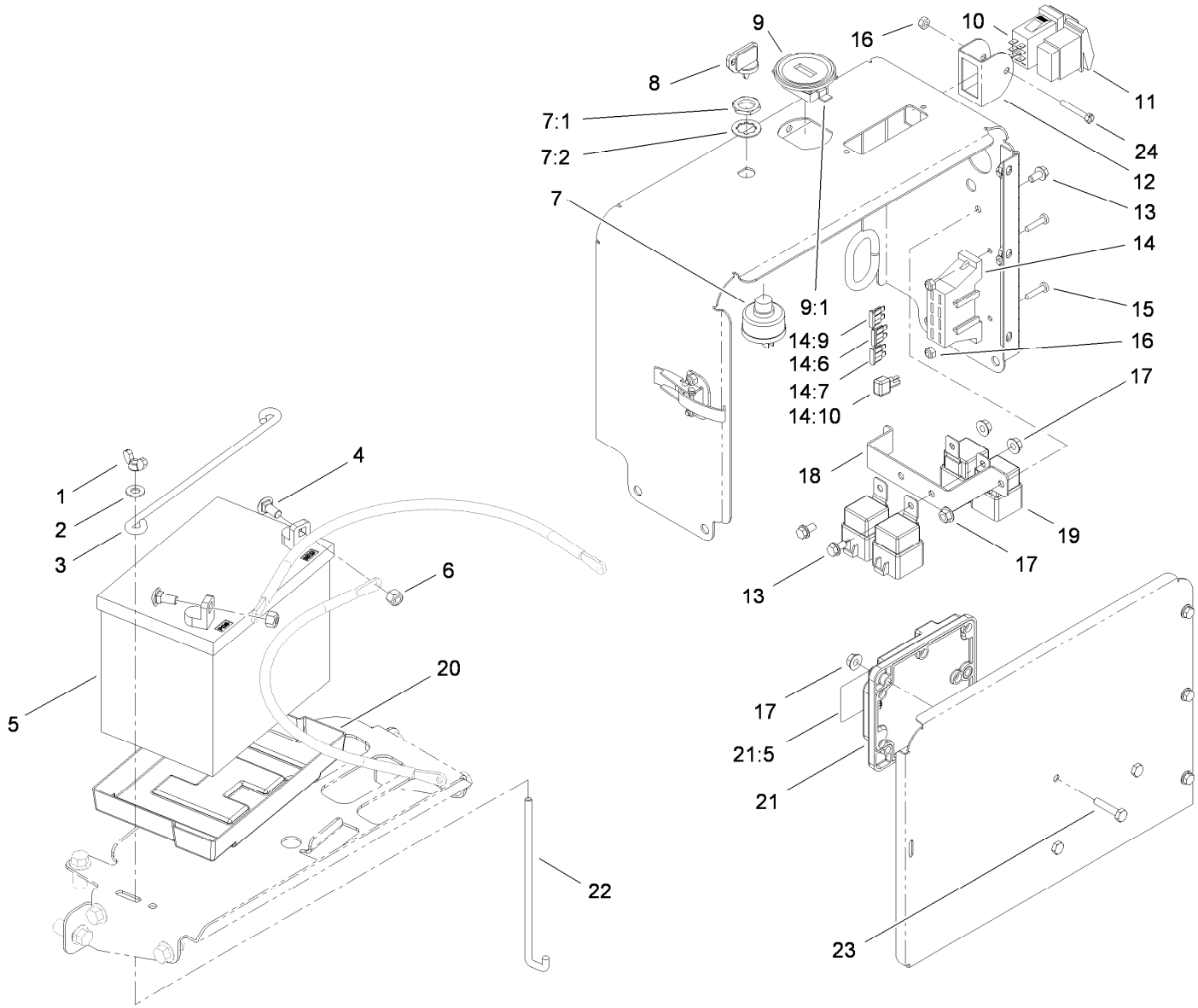

Console Electronics Assembly

Ref.	Part Number	Qty.	Description
1	32103-22	2	Nut-Wing
2	3256-23	2	Washer-Plain
3	100-6434	1	Rod-Hold Down, Battery
4	3230-1	2	Bolt-CARR
5	104-8162	1	Battery
6	104-8300	2	Nut-HF, NI
7	83-0020	1	Switch-Ignition
7:1	218-461	1	Nut-HH
7:2	3254-5	1	Washer-Lock
8	63-8360	2	Key-Ignition
9	104-7427	1	Inductive Hourmeter ASM
9:1	104-4234	1	Clip-Mounting
10	106-8920	1	Switch-Paddle, On-None-On
11	106-2027	1	Switch-Intermittent
12	105-1158	1	Guard-Switch
13	3234-13	3	Screw-HHF

Ref.	Part Number	Qty.	Description
14	106-8823	1	Harness-Electric, Main
14:6	218-578	2	Fuse-Blade, 10 Amp
14:7	94-6710	1	Fuse-2 Amp
14:9	109101	1	Fuse-Blade, 20 Amp
14:10	100-4918	4	Diode
15	3250-27	2	Screw-PPH
16	3296-2	3	Nut-Lock, NI
17	32128-33	6	Nut-HF
18	107-7530-01	1	Bracket-Relay
19	99-7430	4	Relay-Mini
20	106948	1	Tray-Battery
21	106-8831	1	Module-Control, Aerator
21:5	106-8835	1	Decal-Module, Aerator
22	100-6435	2	Post-Battery
23	321-8	3	Screw-HH
24	32105-1	1	Screw-SHH

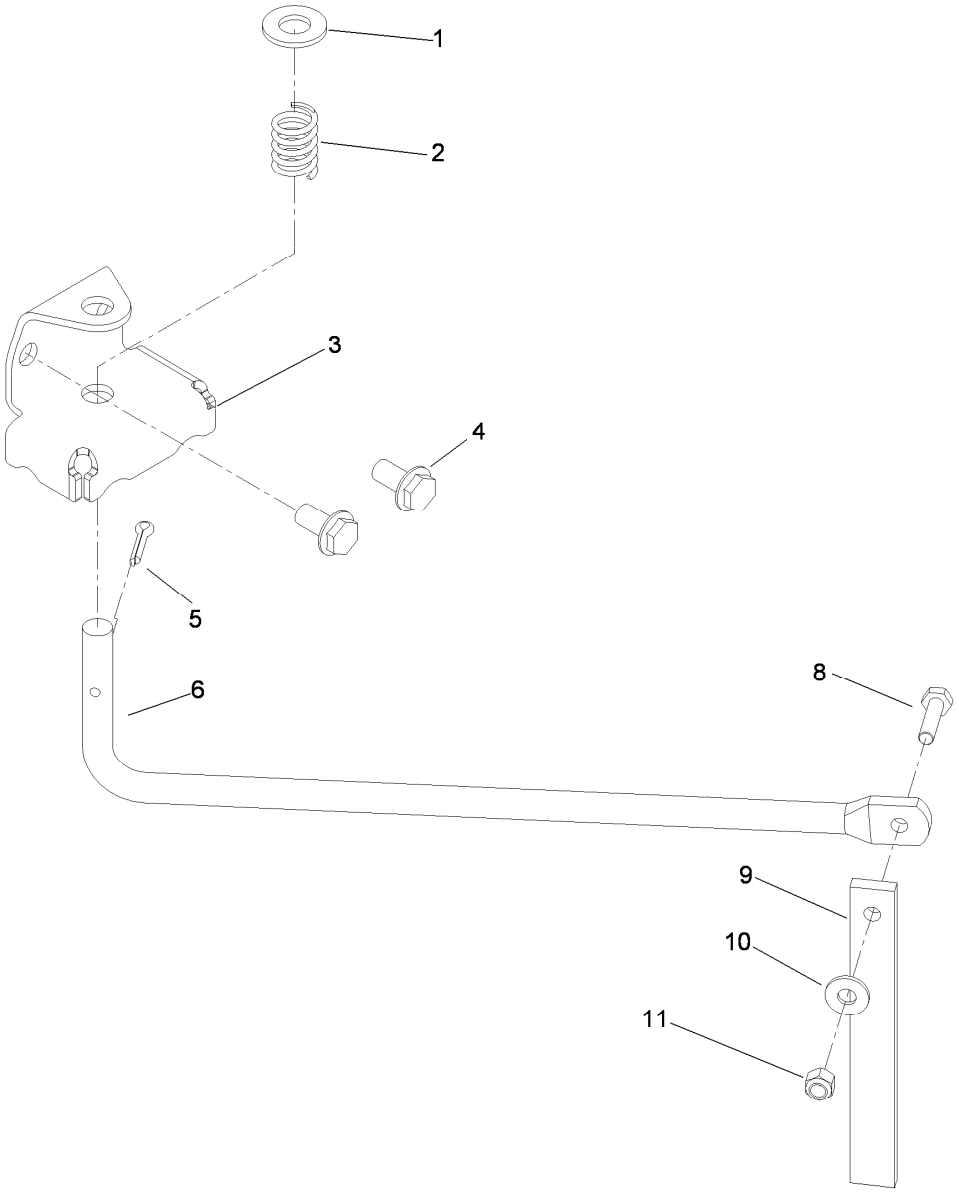

Line Marker Assembly

Ref.	Part Number	Qty.	Description
1	3256-26	2	Washer-Flat
2	20-6110	2	Spring-Compression
3	105-1178-01	2	Bracket-Marker
4	3234-1	4	Screw-HHF
5	3272-31	2	Pin-Cotter
6	105-1179	2	Rod-Marker
8	321-6	2	Screw-HH
9	59-9460	2	Guide
10	3256-2	2	Washer-Flat
11	3296-42	2	Nut-Lock, NI

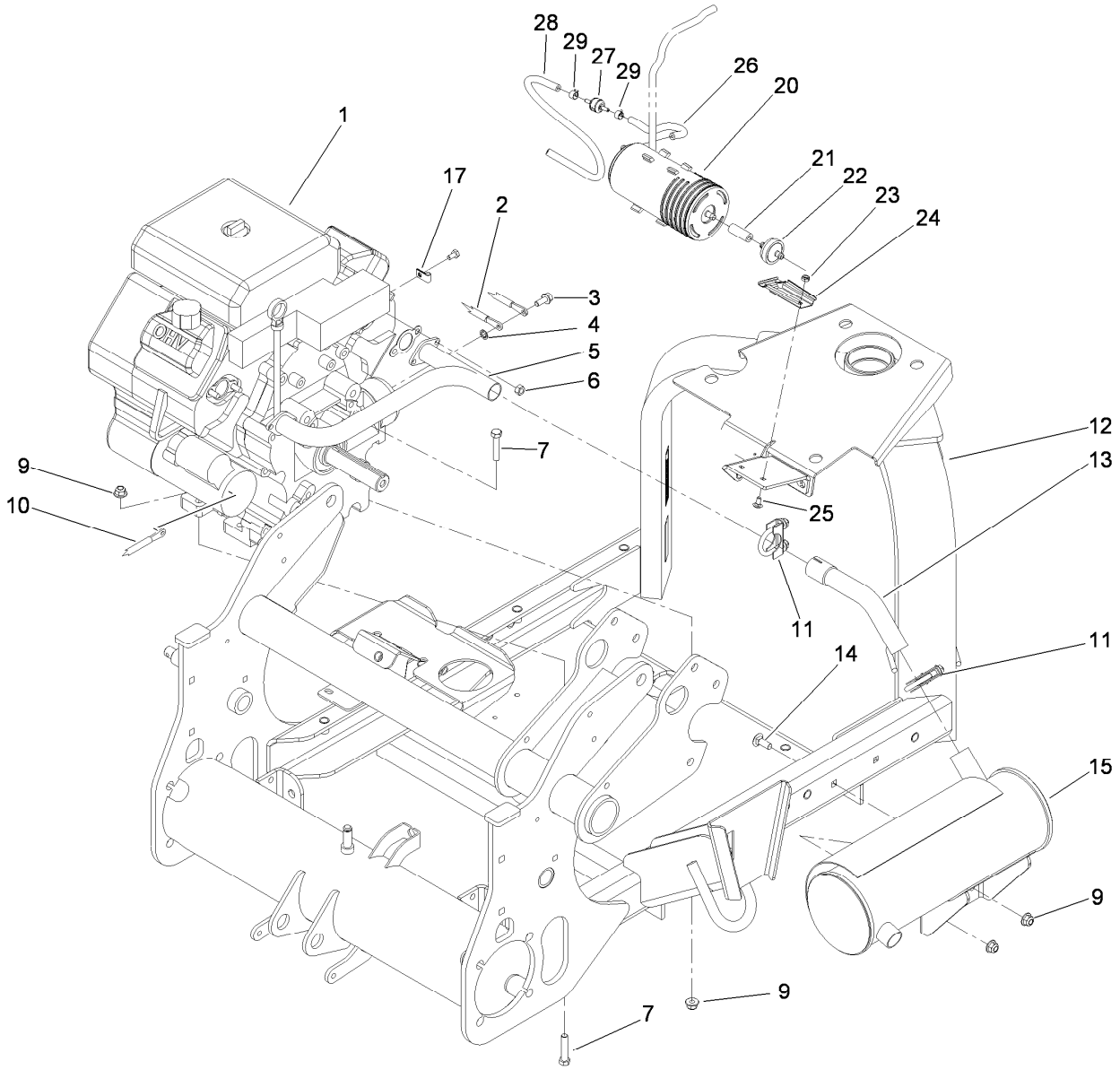

Engine and Muffler Assembly

Ref.	Part Number	Qty.	Description
1	119-0950	1	Engine-Kohler, Ch680-3029 Gas
1:1	108-3847	1	Filter-Oil ●
2	106-8946	1	Cable-Battery, Negative
3	33104-020	1	Screw-HHF
4	3254-2	1	Washer-Lock, Internal
5	106-8858	1	Manifold-Exhaust
6	33014-00	4	Nut-Hex
7	323-9	4	Screw-HH
9	104-8301	6	Nut-HF, NI
10	106-8945	1	Cable-Battery, Positive
11	104-4090	2	Clamp-Muffler
12	106-8910	1	Front Frame ASM
13	106-8857	1	Elbow-Exhaust

Ref.	Part Number	Qty.	Description
14	3231-2	2	Bolt-CARR
15	106-8859	1	Muffler-Exhaust
17	2412-72	1	Clip-Closed, Insulated
20	117-1221	1	Canister-Carbon, 800Cc
21	106-5317	1	Hose-Fuel
22	115-7854	1	Filter-Fuel, Inline
23	3296-56	2	Nut-Lock, NI
24	114-0292	1	Bracket-Canister, Carbon
25	3229-10	2	Screw-CARR
26	115-4736	1	Hose-Fuel
27	115-7868	1	Valve-Check, Vacuum
28	115-4735	1	Hose-Fuel
29	2412-146	2	Clamp-Hose

● Not illustrated

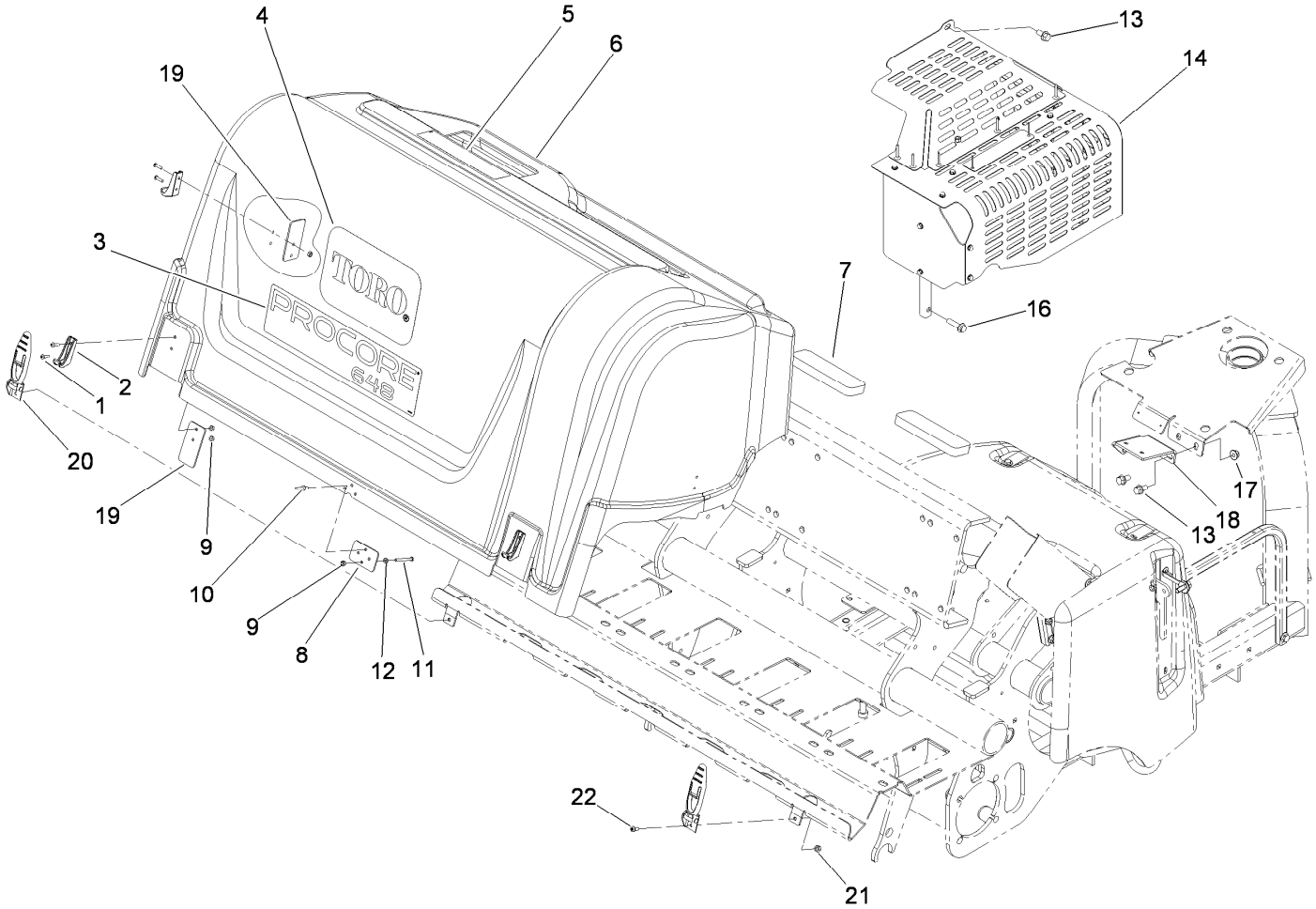

Rear Hood and Muffler Shield Assembly

Ref.	Part Number	Qty.	Description
1	104-2408	8	Screw-HSBH
2	103-2897	4	Latch-Catch
3	106-8852	1	Decal
4	67-7310	1	Decal
5	106-8856	1	Decal-Depth, Tine
6	110-1494	1	Hood-Rear
7	107-7507	3	Pad-Foam
8	107-7508	1	Plate-Backup
9	3296-2	9	Nut-Lock, NI
10	3269-22	3	Rivet-Pop
11	32105-20	1	Screw-HH
12	3217-26	1	Nut-Hex
13	3234-1	3	Screw-HHF
14	107-7546	1	Shield ASM
16	3234-18	2	Screw-HHF
17	104-8301	2	Nut-HF, NI
18	115-4734	1	Canister Bracket ASM
19	110-1499	4	Plate-Reinforcement
20	103-2898	4	Latch-Rubber
21	3296-42	4	Nut-Lock, NI
22	3274-31	4	Screw-HSBH

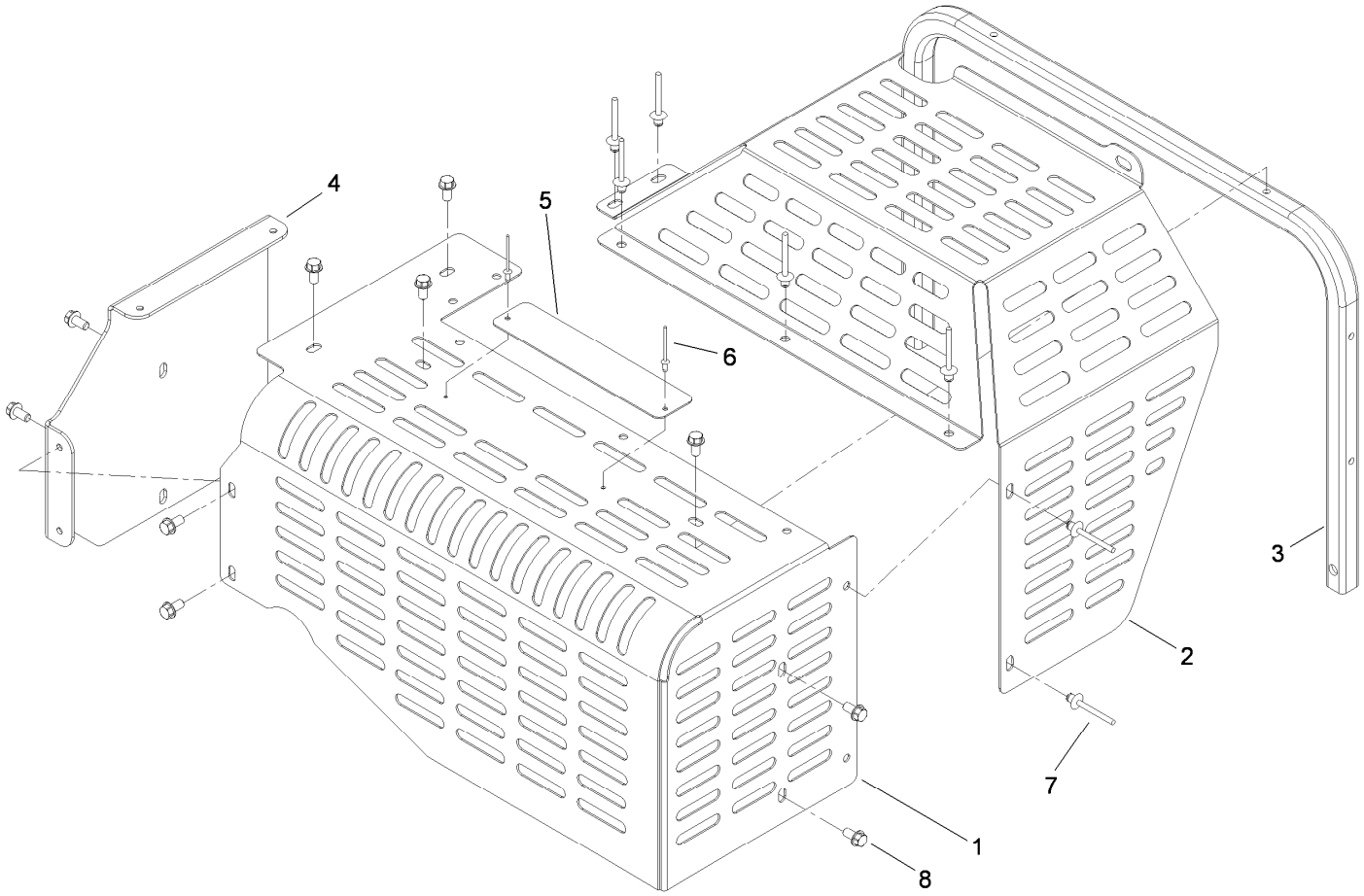

Shield Assembly No. 107-7546

Ref.	*Part Number*	*Qty.*	*Description*
1	106-8903-01	1	Shield-Muffler
2	106-8904-03	1	Shield-Clutch
3	106-8848-01	1	Tube-Shield, Muffler
4	106-8906-01	1	Bracket-Shield, Muffler
5	107-7547	1	Plate-Warning
6	3269-32	2	Rivet-Pop
7	93-8744	7	Rivet-Blind
8	32144-4	10	Screw-HWH

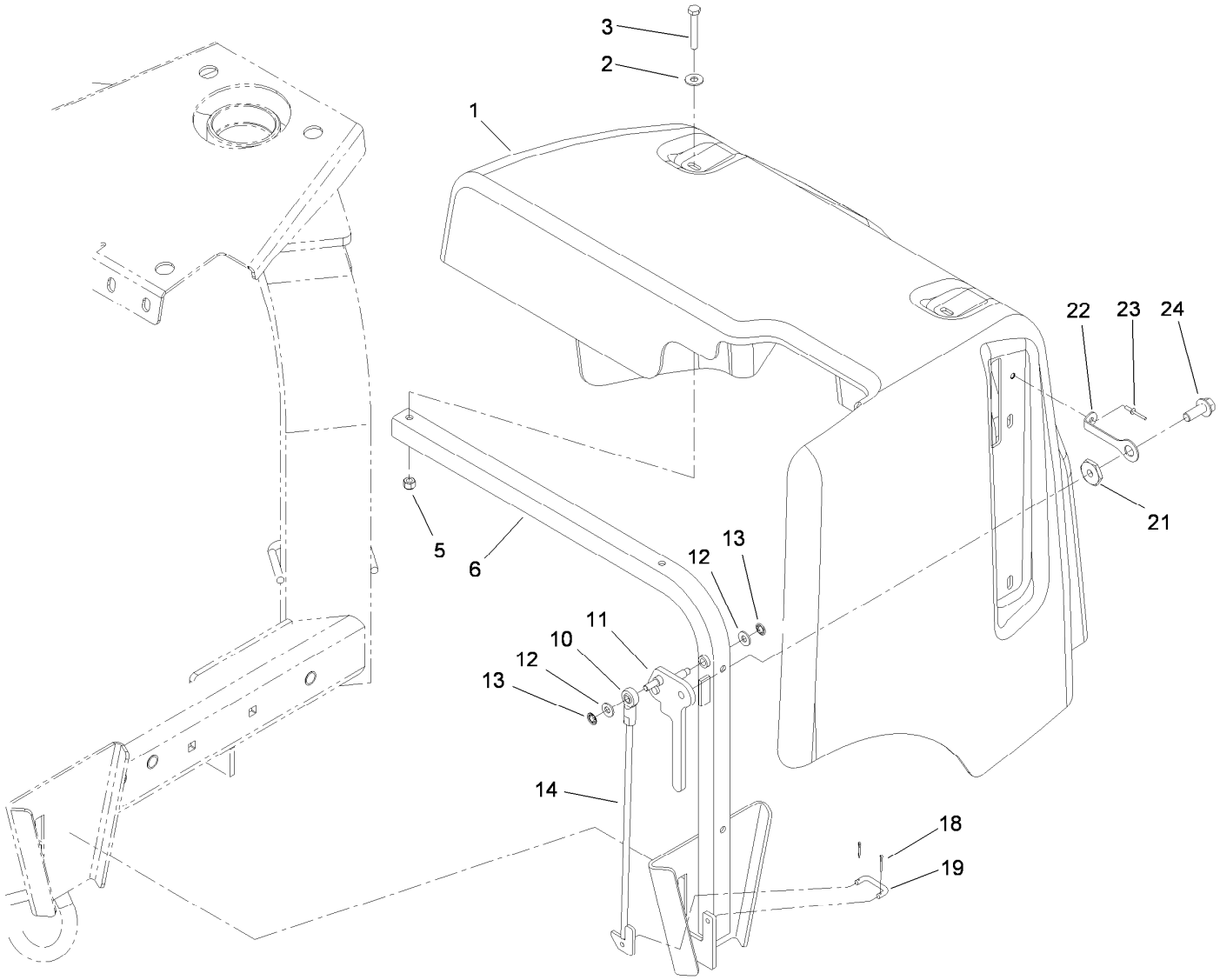

Jackshaft Hood Assembly

Ref.	Part Number	Qty.	Description
1	106-8901	1	Hood-Front
2	100-2400	4	Washer
3	321-10	4	Screw-HH
5	3296-42	4	Nut-Lock, NI
6	106-8846-03	1	Frame-Hood
10	2411-41	1	Rod End-Ball Joint
11	115-4737-03	1	Lever-Hood
12	3256-22	2	Washer-Flat

Ref.	Part Number	Qty.	Description
13	104-8310	2	Ring-Retaining
14	106-8928	1	Hook ASM
18	3272-1	2	Pin-Cotter
19	69-9140	1	Link-Lever, Valve
21	117-8347	1	Nut-Shoulder
22	117-8339	1	Lanyard-3 Inch
23	3290-55	1	Rivet-Pop
24	3234-42	1	Screw-HHF

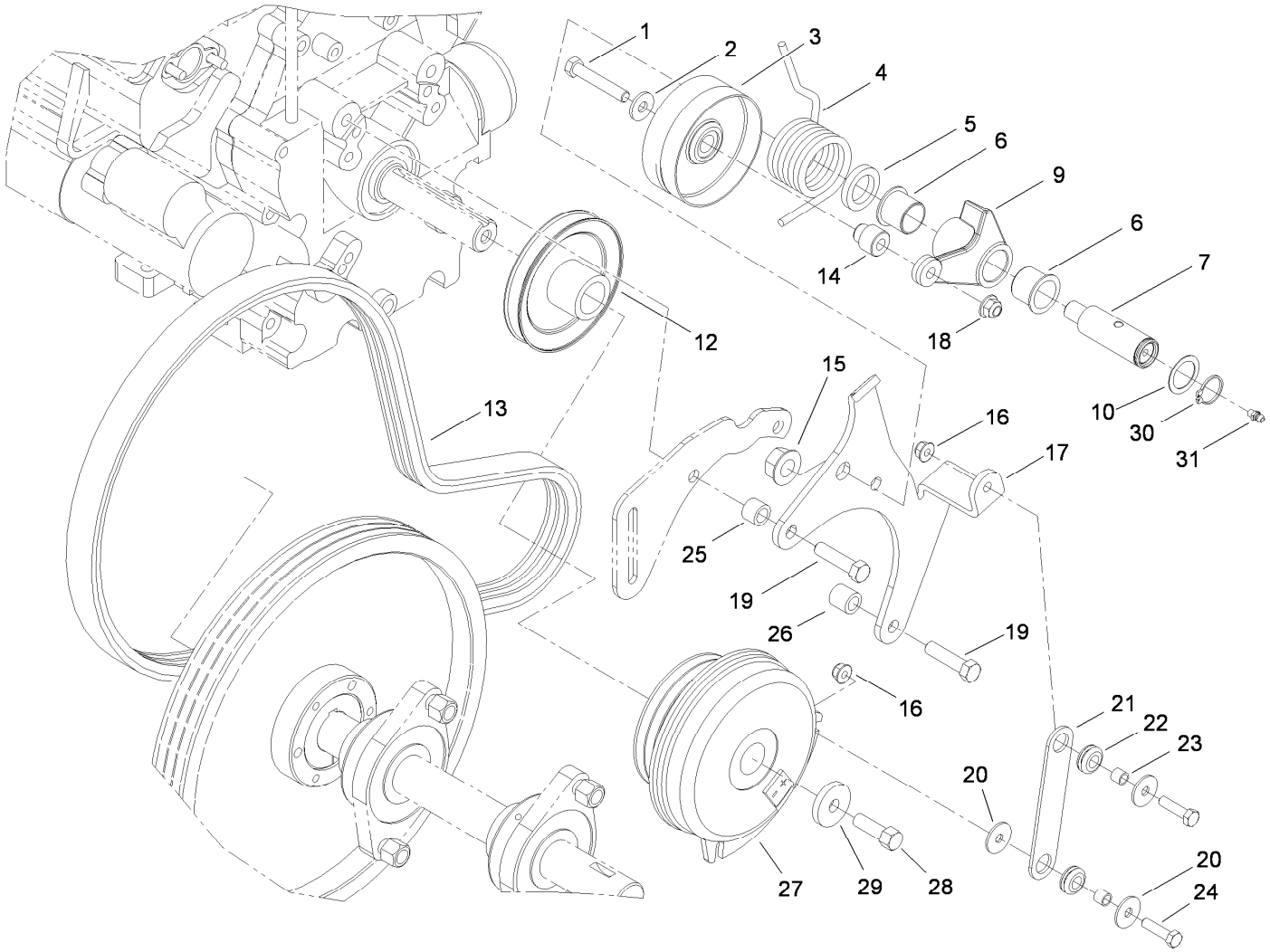

Primary Belt Drive Assembly

Ref.	Part Number	Qty.	Description
1	323-11	1	Screw-HH
2	80-6990	1	Washer-Hardened
3	99-3621	1	Pulley-Idler
4	115-3488	1	Spring-Torsion
5	99-3625	1	Spacer-Arm, Idler
6	99-3631	2	Bushing-Flange
7	99-3624	1	Shaft-Pivot, Idler
9	99-3623-03	1	Arm-Idler
10	74-1810	1	Washer
12	107-3379	1	Pulley
13	105-0989	1	Belt-3V
14	99-3622	1	Spacer-Idler
15	32128-54	1	Nut-HF
16	104-8300	2	Nut-HF, NI
17	115-4724-03	1	Bracket-Mounting, Idler

Ref.	Part Number	Qty.	Description
18	104-8301	1	Nut-HF, NI
19	324-7	3	Screw-HH
20	3256-82	3	Washer-Flat
21	107-3382	1	Strap-Clutch
22	1-633630	2	Grommet
23	1-633545	2	Spacer
24	322-6	2	Screw-HH
25	68-5440	2	Spacer
26	105-0985	1	Spacer-Support, Idler
27	108-2126	1	Clutch-Electric
28	26-0671	1	Screw-HH
29	1-543610	1	Washer-Clutch
30	32151-36	1	Ring-Retaining
31	302-5	1	Fitting-Grease

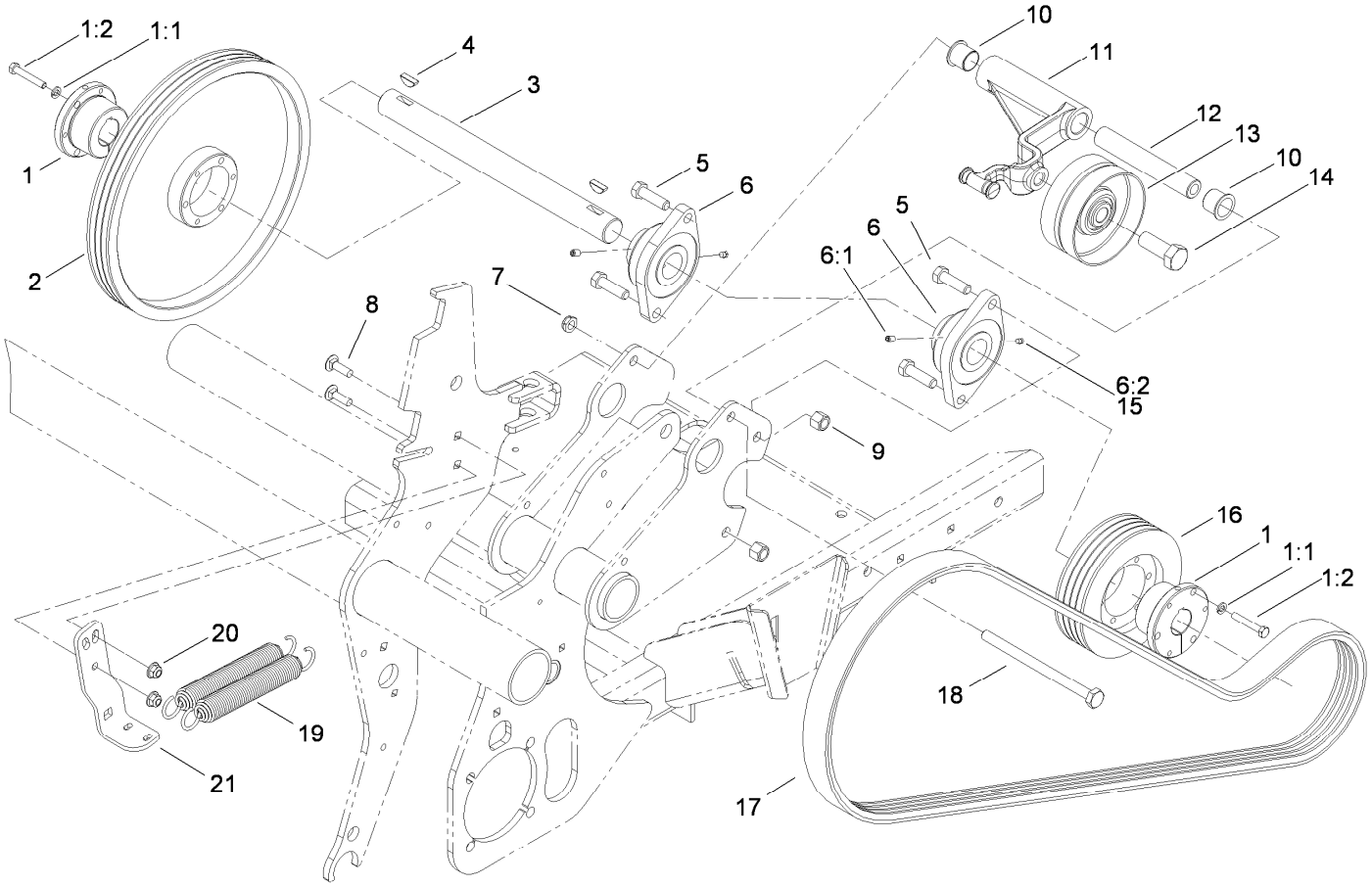

Secondary Belt Drive Assembly

Ref.	Part Number	Qty.	Description
1	59-3790	2	Bushing-Lock, Taper
1:1	3253-4	3	Washer-Lock
1:2	322-10	3	Screw-HH
2	105-0977	1	Pulley-3V
3	105-0975	1	Jackshaft
4	3257-42	2	Key-Woodruff
5	325-7	4	Screw-HH
6	105-0962	2	Bearing-Mount, Flange
6:1	3246-17	1	Setscrew-HSH
6:2	302-5	1	Fitting-Grease
7	3296-45	1	Nut-Hex
8	3231-25	2	Bolt-CARR
9	3296-23	4	Nut-Lock, NI

Ref.	Part Number	Qty.	Description
10	99-3631	2	Bushing-Flange
11	105-1132-03	1	Arm-Idler
12	105-1172	1	Tube-Pivot, Idler
13	100-7631	1	Pulley-Idler
14	328-24	1	Screw-HH
15	302-59	2	Plug-Threaded
16	105-0976	1	Pulley-3V
17	105-0991	1	Belt-Banded, 4 Groove
18	325-36	1	Screw-HH
19	106-8933	2	Spring-Extension
20	104-8301	2	Nut-HF, NI
21	105-1118-03	1	Arm-Spring, Idler

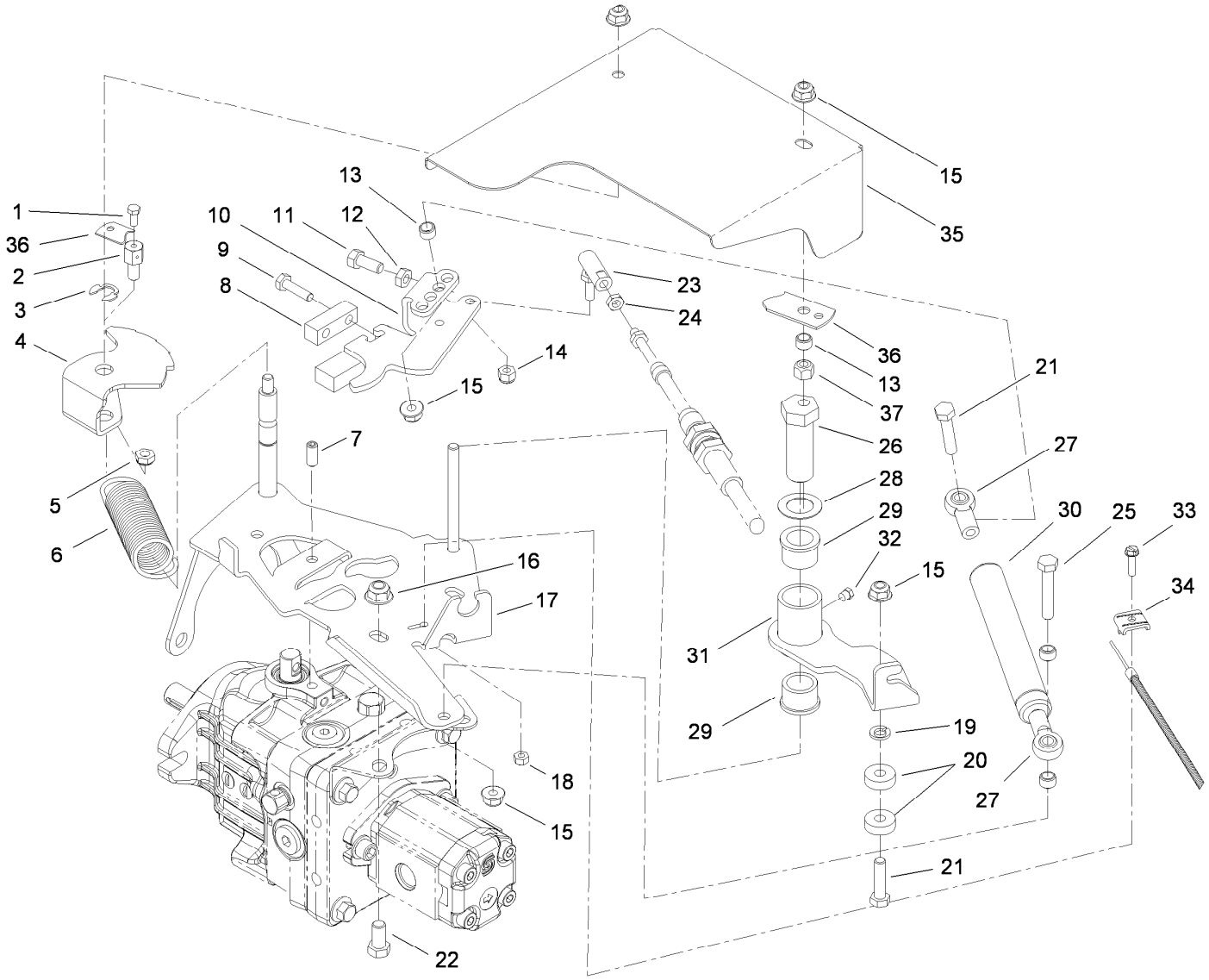

Hydro Control Assembly

Ref.	Part Number	Qty.	Description
1	25-8640	1	Screw-HH
2	98-9311	1	Swivel-Throttle
3	32151-68	1	Ring-Retaining
4	105-1129-01	1	Pivot-Selector, Speed
5	3296-20	1	Nut-Lock, NI
6	115-4712	1	Spring-Extension
7	115-2819	1	Screw-Set, HSH
8	105-1109	1	Clamp-Trunnion
9	321-6	2	Screw-HH
10	105-1125-01	1	Lever-Pump
11	3210-3	1	Screw-HH
12	3220-2	1	Nut-Jam
13	92-3133	4	Spacer-Lever, Traction
14	3296-3	1	Nut-Lock
15	104-8300	5	Nut-HF, NI
16	104-8301	2	Nut-HF, NI
17	115-2809-01	1	Bracket-Control
18	3296-2	1	Nut-Lock, NI
19	3253-4	1	Washer-Lock

Ref.	Part Number	Qty.	Description
20	251-259	2	Bearing-Ball
21	322-7	2	Screw-HH
22	323-4	2	Screw-HH
23	2411-34	1	Joint-Ball
24	3220-1	1	Nut-Jam
25	322-9	1	Screw-HH
26	76-8640	1	Stud-Traction
27	104-8331	2	End-Rod, Spherical
28	3-6498	1	Washer-Thrust
29	256-113	2	Bushing-Flange
30	105-3249	1	Damper
31	105-1060-01	1	Lever-Neutral
32	302-59	1	Plug-Threaded
33	32105-13	1	Screw-HWH
34	81-1690	1	Clamp-Cable
35	107-7578-01	1	Shield-Hydrostat
36	108-6836	1	Strap-Traction
37	3296-29	1	Nut-Lock, NI

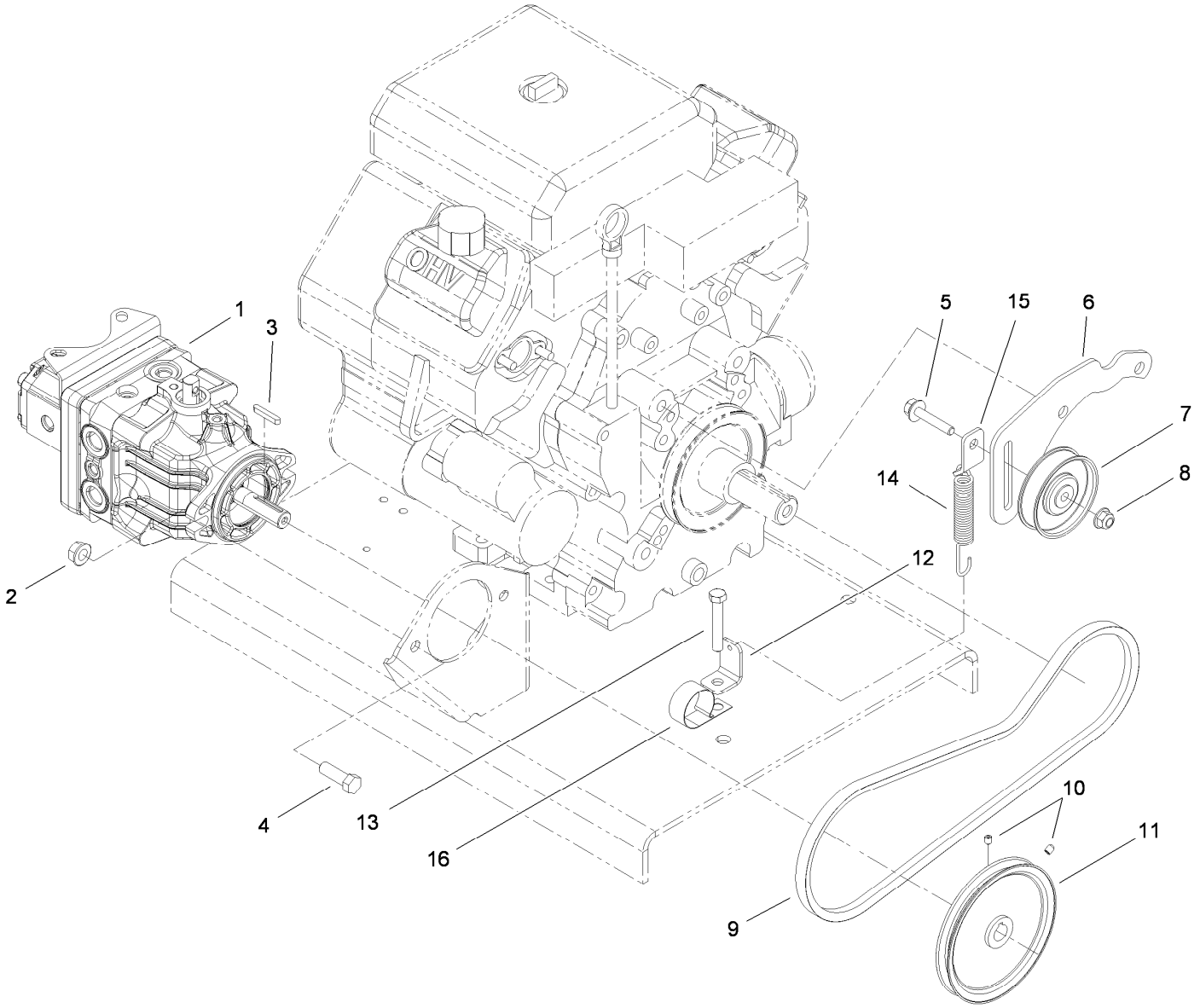

Hydrostat Pump Assembly

Ref.	Part Number	Qty.	Description
1	115-4700	1	Hydrostat And Pump ASM
2	32128-37	2	Nut-HF
3	103-2739	1	Key
4	324-6	2	Screw-HH
5	3234-19	1	Screw-HHF
6	105-1085-03	1	Support-Idler
7	112426	1	Pulley-Idler
8	104-8301	1	Nut-HF, NI

Ref.	Part Number	Qty.	Description
9	107-7513	1	V-Belt
10	3245-7	2	Screw-Set
11	105-0988	1	Pulley-Drive
12	107-7583	1	Bracket-L
13	104-3396	1	Screw-HH
14	106-4502	1	Spring-Scraper
15	107-7588	1	Bracket-Spring
16	2412-150	1	Clip-J

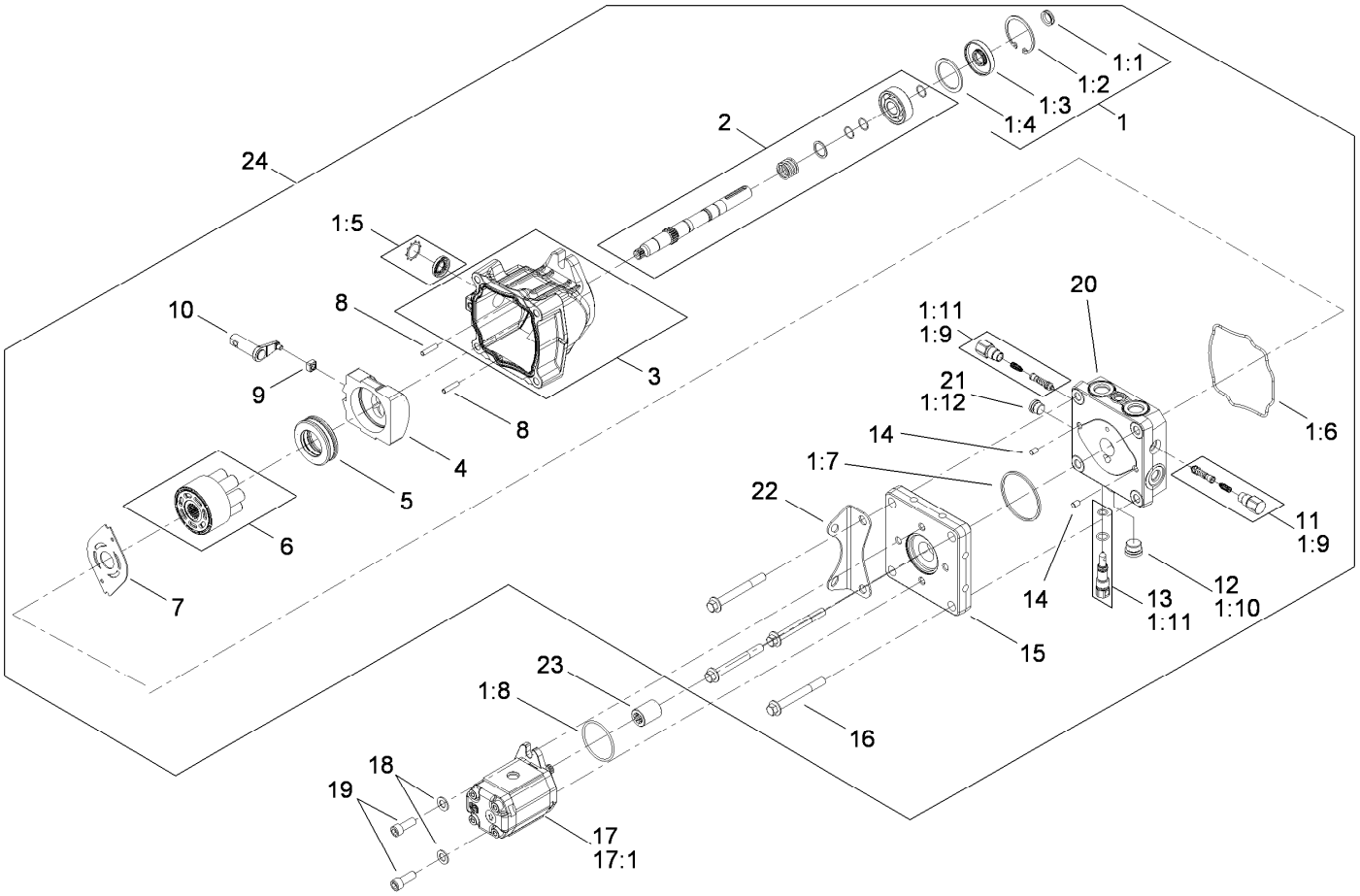

Hydrostat Pump Assembly No. 115-4700

Ref.	Part Number	Qty.	Description
1	108-2110	1	Overhaul Seal Kit
1:1		1	V-Ring ●
1:2		1	Ring-Retaining ●
1:3		1	Seal-Shaft ●
1:4		1	Spacer ●
1:5		1	Seal-Trunnion ●
1:6		1	Gasket-Housing ●
1:7		1	O-Ring, Sq Section ●
1:8		1	O-Ring, Pump ●
1:9		2	O-Ring, Shock Valve ●
1:10		1	O-Ring, Plug ●
1:11		1	O-Ring, Bypass ●
1:12		1	O-Ring, Plug ●
2		1	Pump Shaft Kit ●
3		1	Housing ●
4		1	Swashplate-Variable ●
5		1	Thrust Bearing ASM ●
6	108-2112	1	Cylinder Block Kit
7	108-6801	1	Plate-Valve

Ref.	Part Number	Qty.	Description
8		2	Pin ●
9		1	Slot-Guide ●
10		1	Arm-Trunnion ●
11	108-2109	2	Shock Valve Kit
12		1	Plug ●
13	106-8759	1	Bypass Valve Kit
14		2	Pin ●
15		1	Plate-Adapter ●
16		4	Screw-Hex, Flange Head ●
17	108-2113	1	Pump-HYD
17:1	106-6362	1	Seal Kit
18		2	Washer ●
19		2	Capscrew-SHH ●
20		1	Endcap Kit ●
21		1	Plug ●
22		1	Bracket-Mount ●
23	108-6843	1	Coupling
24	115-4731	1	Gear Pump Ready Tandem ASM

● Not serviced separately

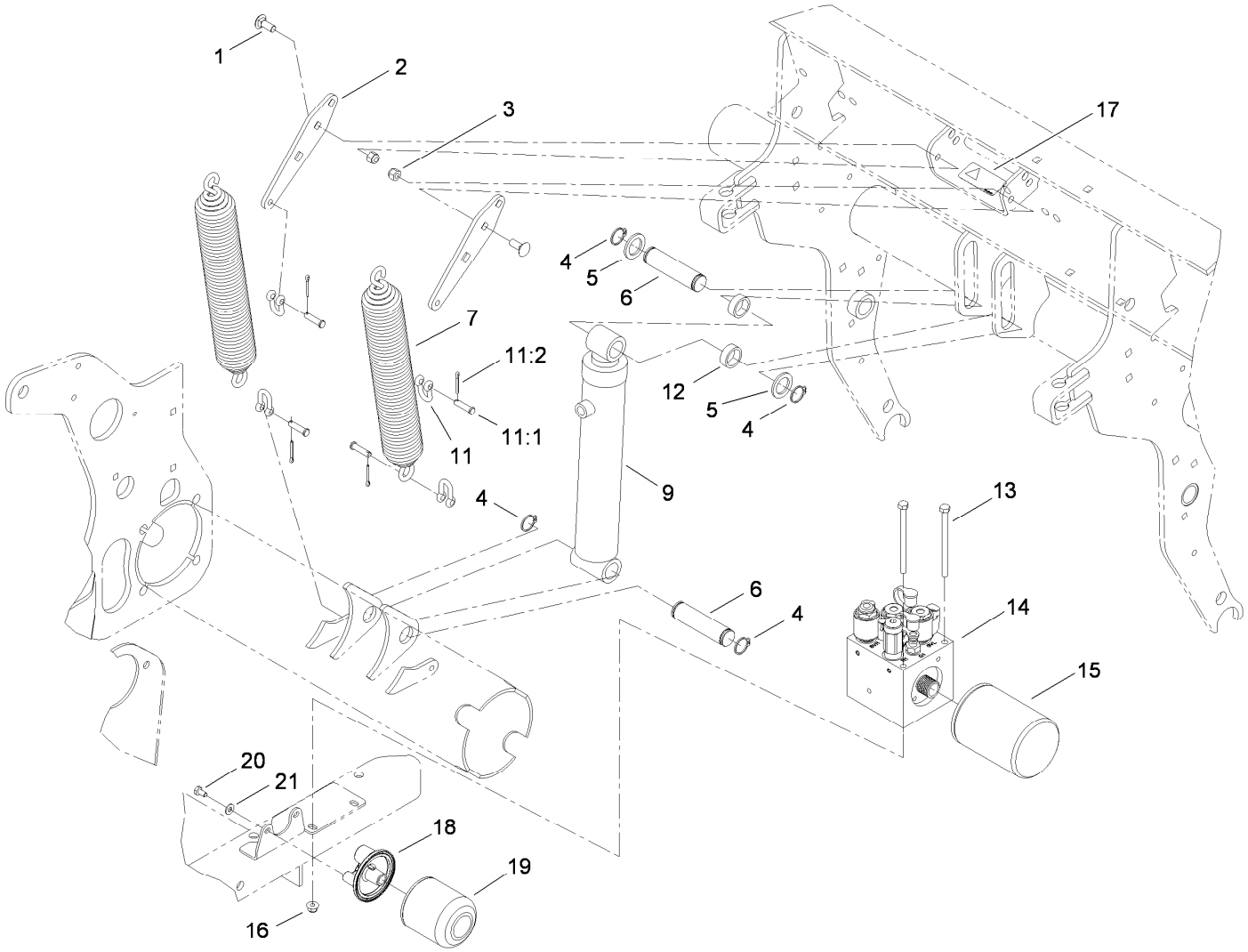

Lift System Assembly

Ref.	Part Number	Qty.	Description
1	3231-2	4	Bolt-CARR
2	105-1190-01	2	Plate-Tension, Spring
3	104-8301	4	Nut-HF, NI
4	32151-36	4	Ring-Retaining
5	256-115	2	Washer-Thrust
6	105-1031	2	Pin-Cylinder
7	105-1156-03	2	Spring-Extention
9	105-1030	1	HYD Cylinder ASM
11	282-4	4	Shackle
11:1	283-6	1	Pin-Clevis
11:2	3272-11	1	Pin-Cotter

Ref.	Part Number	Qty.	Description
12	88-7530	2	Spacer
13	322-38	2	Screw-HH
14	106-8802	1	Manifold-Control
15	107-9531	1	Filter-Oil, HYD
16	104-8300	2	Nut-HF, NI
17	93-6696	1	Decal-Warning
18	103-2888	1	Head-Filter
19	1-633750	1	Filter-Oil, HYD
20	321-2	2	Screw-HH
21	3256-22	2	Washer-Flat

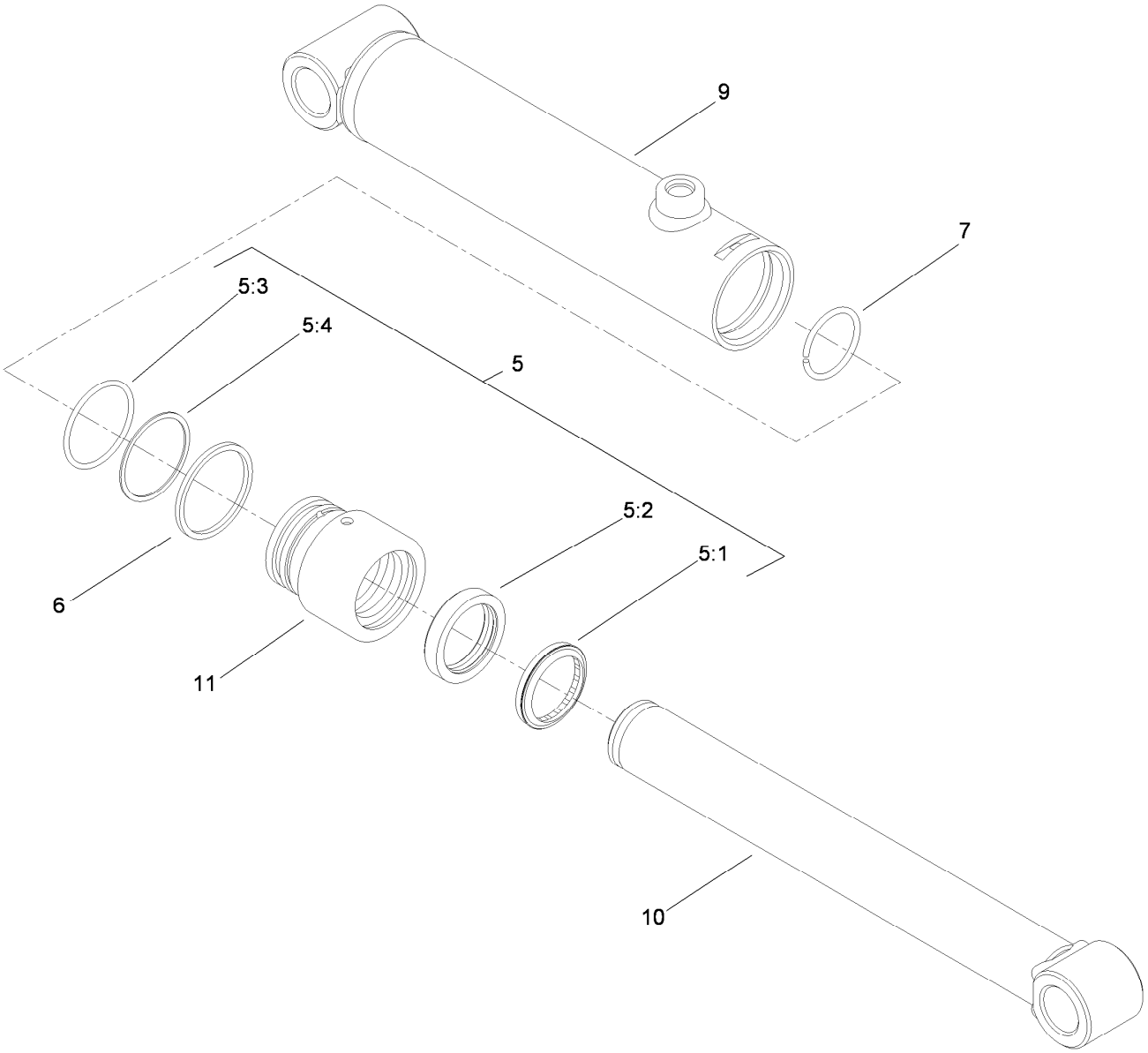

Hydraulic Cylinder Assembly No. 105-1030

Ref.	*Part Number*	*Qty.*	*Description*
5	108-6795	1	Cylinder Seal Kit
5:1		1	Wiper ●
5:2		1	Seal ●
5:3		1	Ring-Retaining ●
5:4		1	Back-Up ●
6	108-6797	1	Ring-Retainging
7		1	Ring-Retaining ●
9		1	Tube ASM ●
10		1	Rod ASM ●
11		1	Head ●

● Not serviced separately

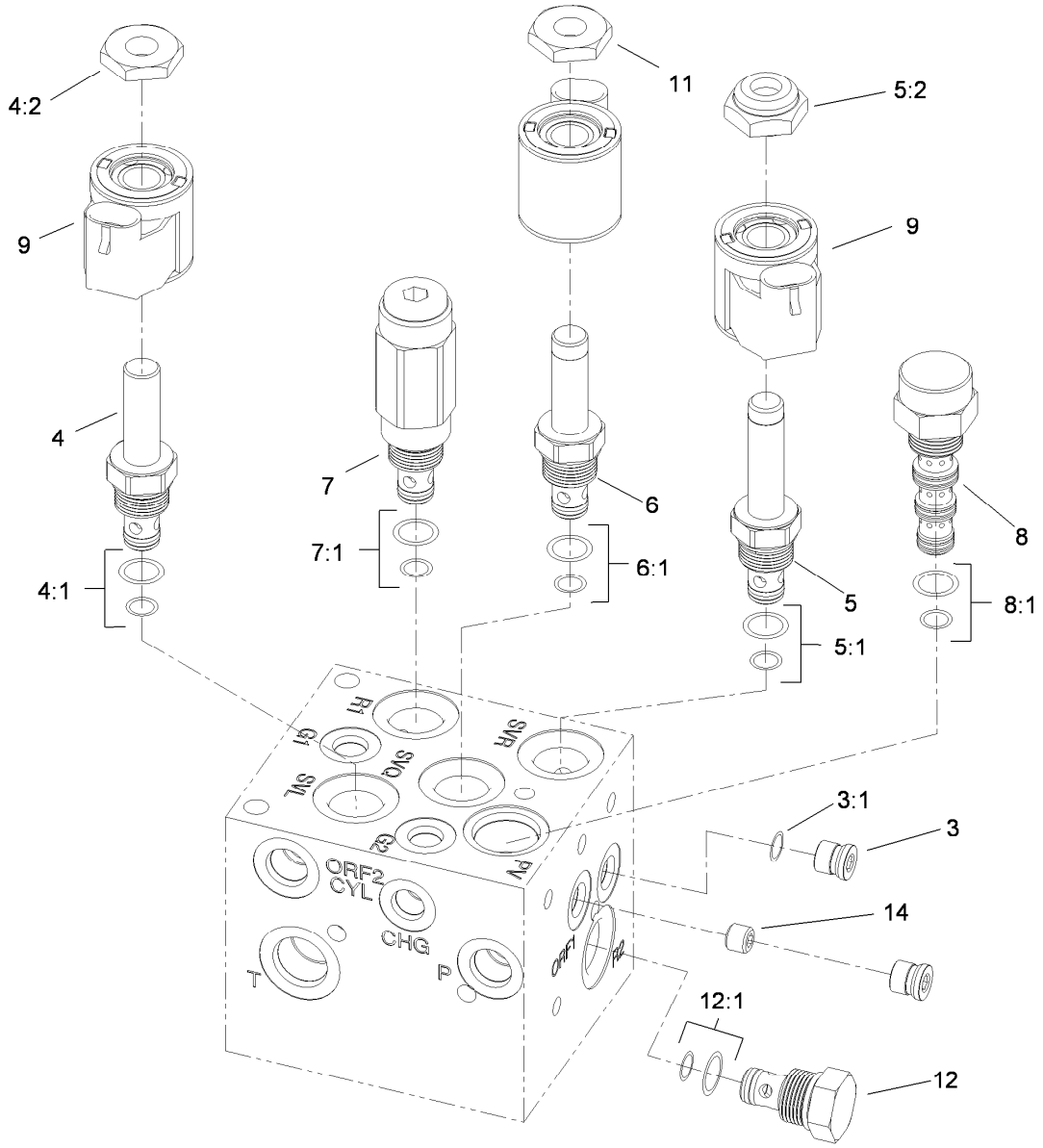

Control Manifold Assembly No. 106-8802

Ref.	Part Number	Qty.	Description
3	106-1025	2	Plug-HYD
3:1	237-78	1	O-Ring
4	112-9206	1	Solenoid Valve ASM
4:1	105-9156	1	Seal Kit
4:2	110-2634	1	Nut-Coil
5	107-7517	1	Valve-Solenoid
5:1	105-9156	1	Seal Kit
5:2	107-7812	1	Nut-Solenoid
6	107-7518	1	Valve-Solenoid
6:1	107-7527	1	Seal Kit
7	107-7519	1	Valve-Relief, 900 PSI
7:1	105-9156	1	Seal Kit
8	107-7520	1	Compensator-Pressure (W/Screen)
8:1	107-7528	1	Seal Kit
9	110-0497	3	Coil-Solenoid
10	107-7522	1	Nut-E Coil ●
11	105-9332	2	Nut-E Coil
12	107-7524	1	Check Valve ASM
12:1	105-9156	1	Seal Kit
14	107-7525	1	Plug-Orifice (.050 Inch)

● Not illustrated

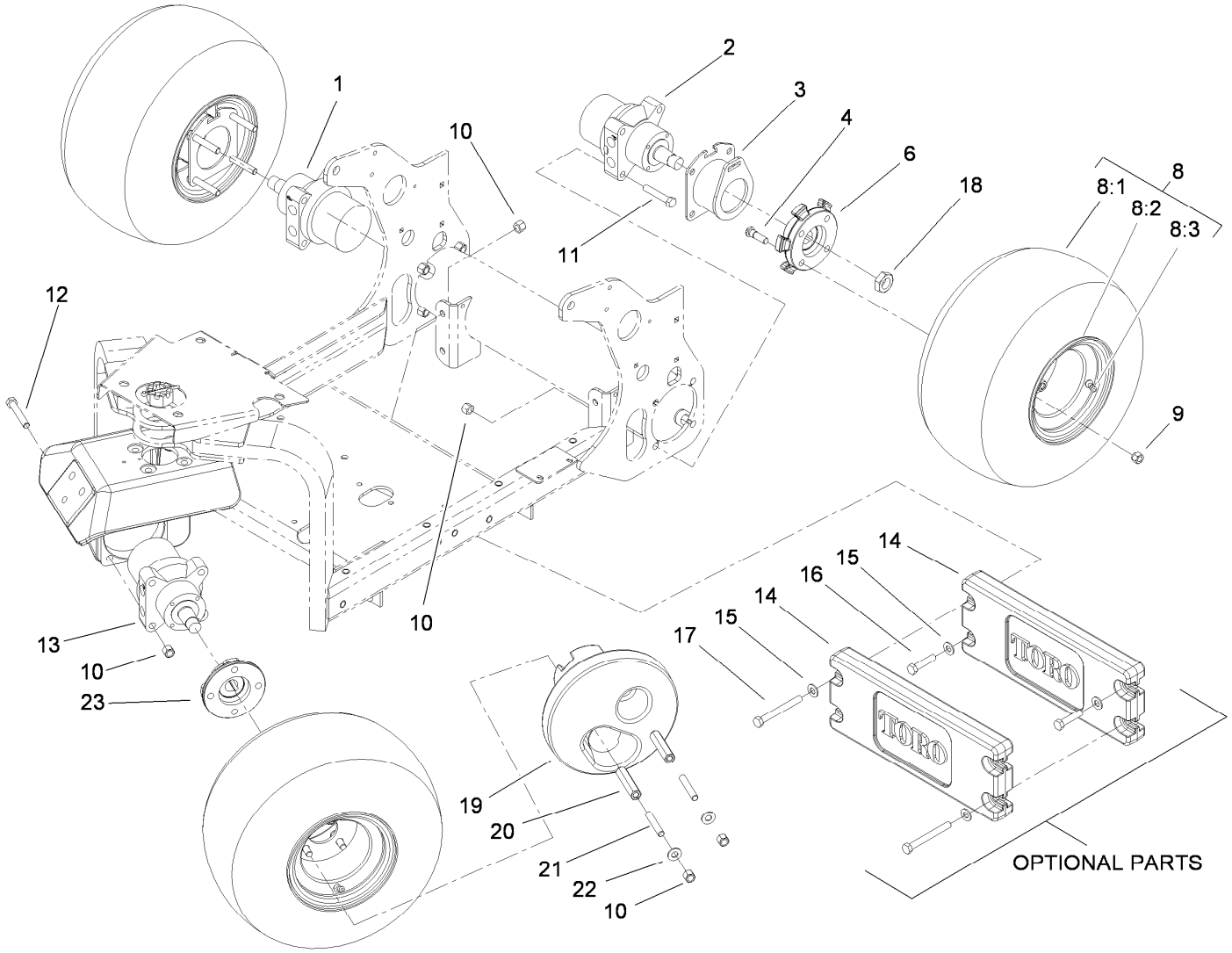

Wheel and Motor Assembly

Ref.	Part Number	Qty.	Description
1	106-8807	1	HYD Motor ASM
2	106-8806	1	HYD Motor ASM
3	106-8881-03	2	Support-Latch, Parking
4	85-6540	12	Stud-Drive
6	108-2101-03	2	Hub-Wheel, Spoked
8	114-4665	3	Tire ASM
8:1	70-8500	1	Tire-Smooth, 2-Ply
8:2	114-4643	1	Wheel
8:3	232-27	1	Stem-Valve
9	242-50	10	Nut-Lug
10	3296-23	18	Nut-Lock, NI
11	325-11	8	Screw-HH

Ref.	Part Number	Qty.	Description
12	325-13	4	Screw-HH
13	106-8808	1	HYD Motor ASM
14	99-6166-01	2	Counterweight-Front
15	3256-26	4	Washer-Flat
16	325-9	2	Screw-HH
17	325-18	2	Screw-HH
18	26-3790	3	Nut-Lock
19	107-3396-03	1	Weight-Wheel
20	107-3399	2	Adapter-Weight, Wheel
21	105-1088	2	Stud
22	87-7270	2	Washer-Thrust
23	108-2103-03	1	Hub-Wheel

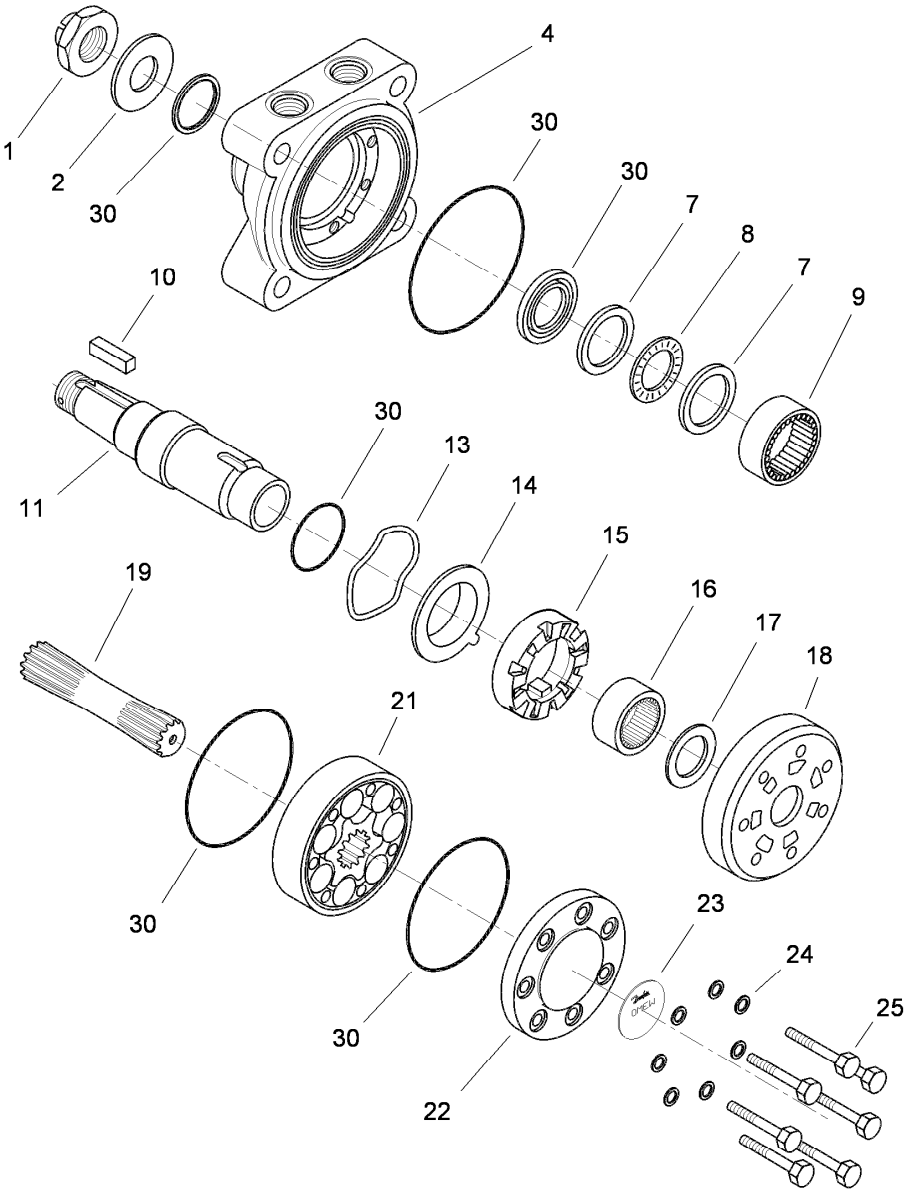

Hydraulic Motor Assembly No. 106-8807

Ref.	Part Number	Qty.	Description
1		1	Nut-Castellated ●
2		1	Washer ●
4		1	Housing ●
7		2	Race-Bearing ●
8		1	Bearing-Needle, Axial ●
9		1	Bearing-Needle, Radial ●
10		1	Key-Parallel ●
11		1	Shaft-Tapered ●
13		1	Washer-Spring ●
14		1	Plate-Balance ●
15		1	Disc-Valve ●
16		1	Bearing-Needle, Radial ●
17		1	Race-Bearing ●
18		1	Plate-Distributor ●
19		1	Shaft-Cardan ●
21		1	Gearwheel Set ●
22		1	Cover-End ●
23		1	Plate-Name ●
24		7	Washer ●
25		7	Screw ●
30	109-5966	1	Wheel Motor Seal Kit

● Not serviced separately

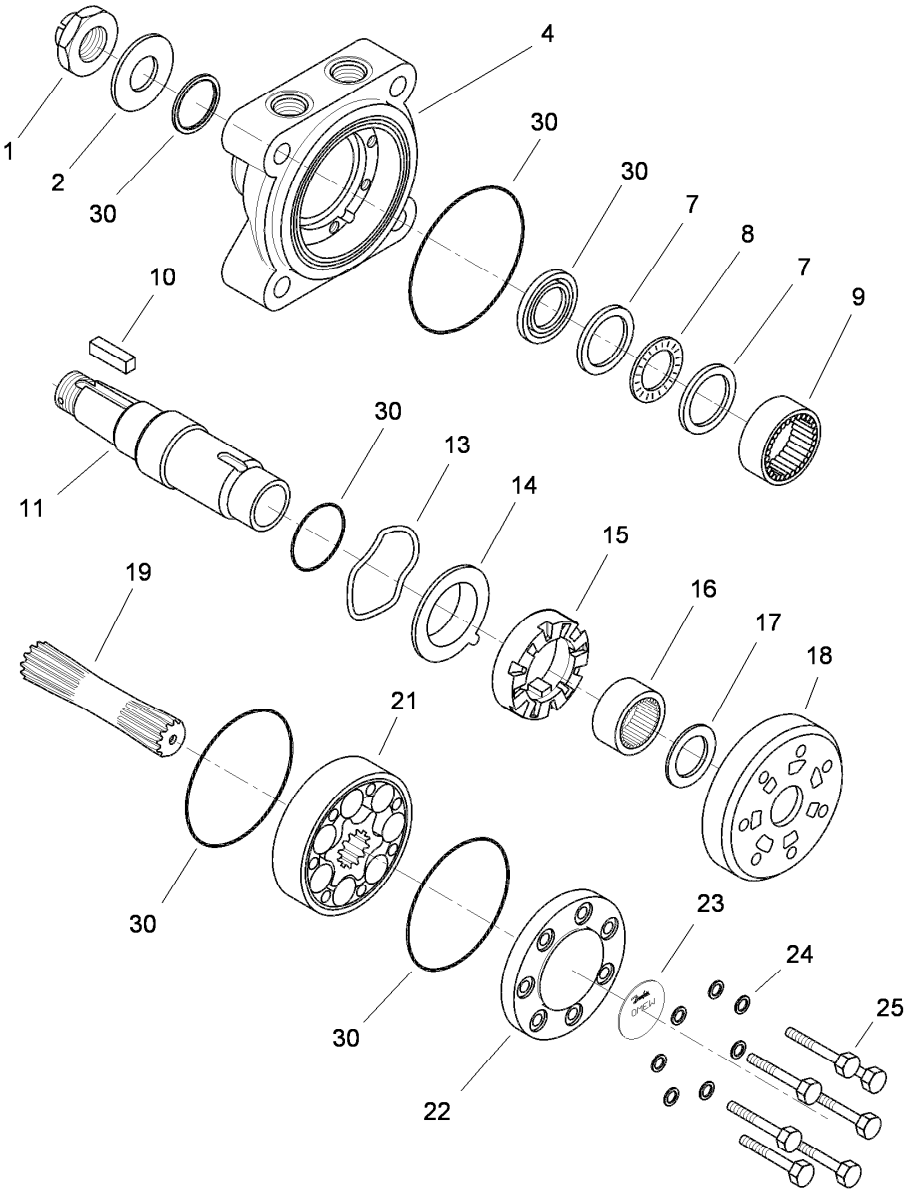

Hydraulic Motor Assembly No. 106-8806

Ref.	Part Number	Qty.	Description
1		1	Nut-Castellated ●
2		1	Washer ●
4		1	Housing ●
7		2	Race-Bearing ●
8		1	Bearing-Needle, Axial ●
9		1	Bearing-Needle, Radial ●
10		1	Key-Parallel ●
11		1	Shaft-Tapered ●
13		1	Washer-Spring ●
14		1	Plate-Balance ●
15		1	Disc-Valve ●
16		1	Bearing-Needle, Radial ●
17		1	Race-Bearing ●
18		1	Plate-Distributor ●
19		1	Shaft-Cardan ●
21		1	Gearwheel Set ●
22		1	Cover-End ●
23		1	Plate-Name ●
24		7	Washer ●
25		7	Screw ●
30	109-5966	1	Wheel Motor Seal Kit

● Not serviced separately

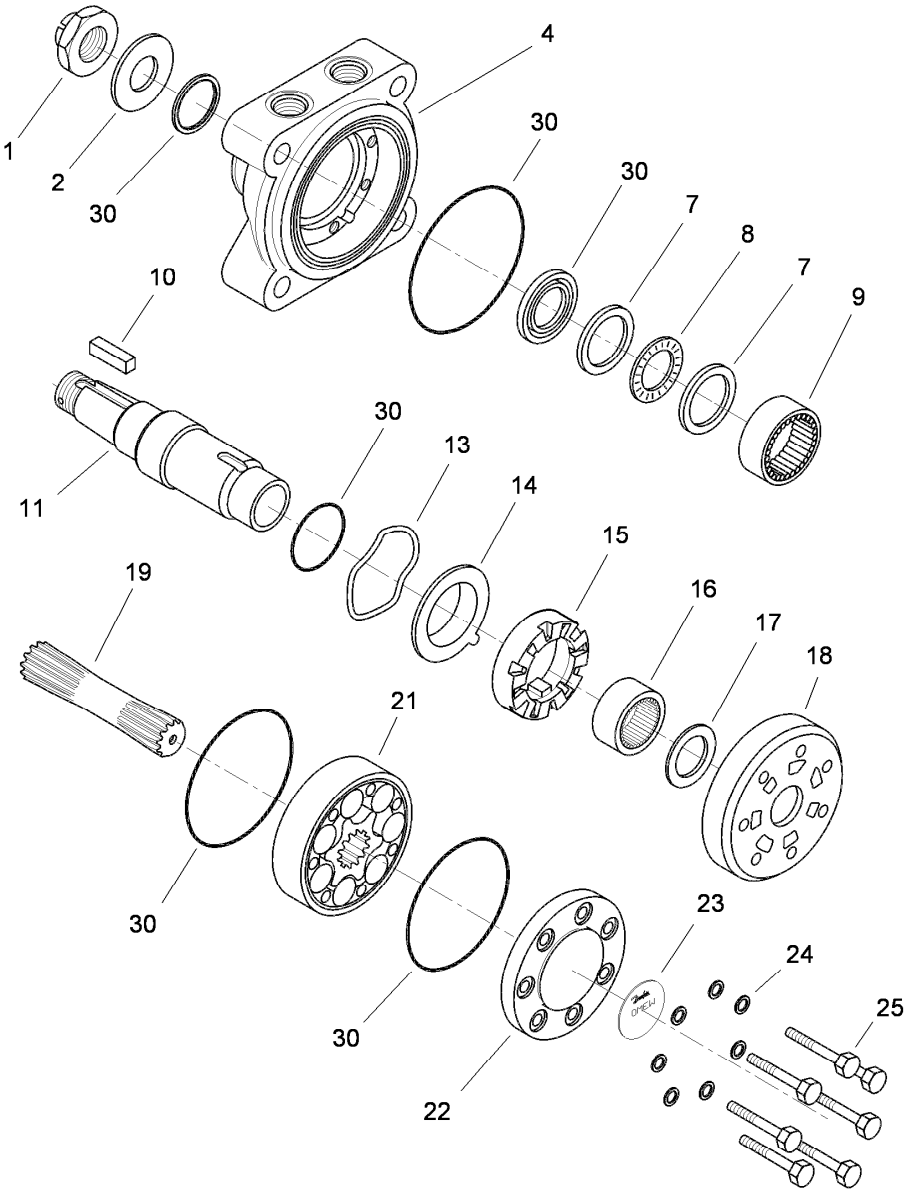

Hydraulic Motor Assembly No. 106-8808

Ref.	Part Number	Qty.	Description
1		1	Nut-Castellated ●
2		1	Washer ●
4		1	Housing ●
7		2	Race-Bearing ●
8		1	Bearing-Needle, Axial ●
9		1	Bearing-Needle, Radial ●
10		1	Key-Parallel ●
11		1	Shaft-Tapered ●
13		1	Washer-Spring ●
14		1	Plate-Balance ●
15		1	Disc-Valve ●
16		1	Bearing-Needle, Radial ●
17		1	Race-Bearing ●
18		1	Plate-Distributor ●
19		1	Shaft-Cardan ●
21		1	Gearwheel Set ●
22		1	Cover-End ●
23		1	Plate-Name ●
24		7	Washer ●
25		7	Screw ●
30	109-5966	1	Wheel Motor Seal Kit

● Not serviced separately

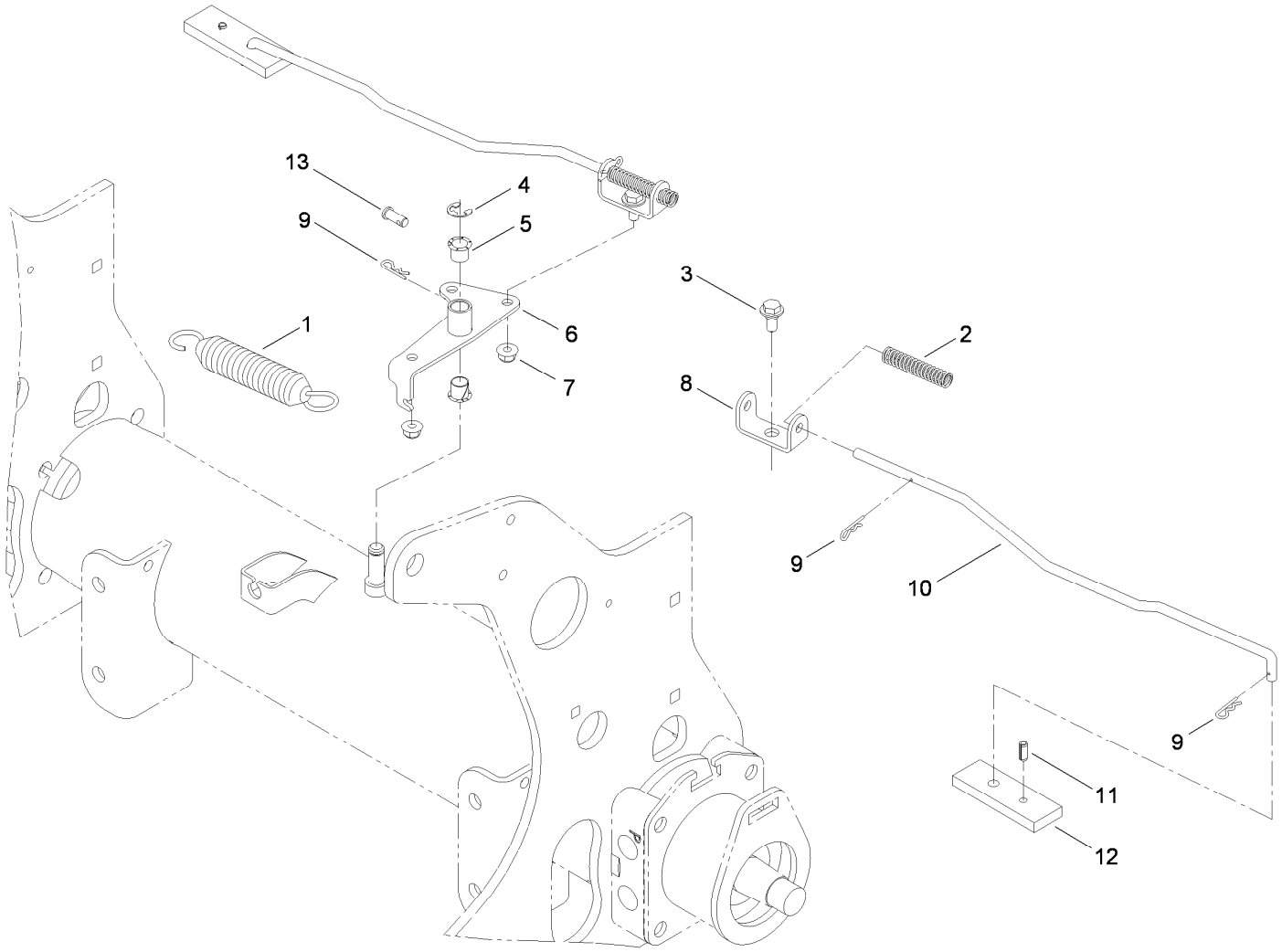

Brake Latch Assembly

Ref.	*Part Number*	*Qty.*	*Description*
1	66-4270	1	Spring-Extension
2	107-3376	2	Spring-Compression
3	19-1470	2	Screw-Shoulder
4	32120-47	2	Ring-Retaining, External
5	256-257	2	Bushing-Nyliner
6	106-8887-03	1	Pivot-Latch, Parking
7	104-8300	2	Nut-HF, NI
8	114-0631	2	Clevis-Latch, Parking
9	3290-307	5	Pin-Cotter
10	106-8886	2	Link-Latch, Parking
11	32121-134	2	Pin-Roll
12	106-8885-03	2	Bar-Latch, Parking
13	283-62	1	Pin-Clevis

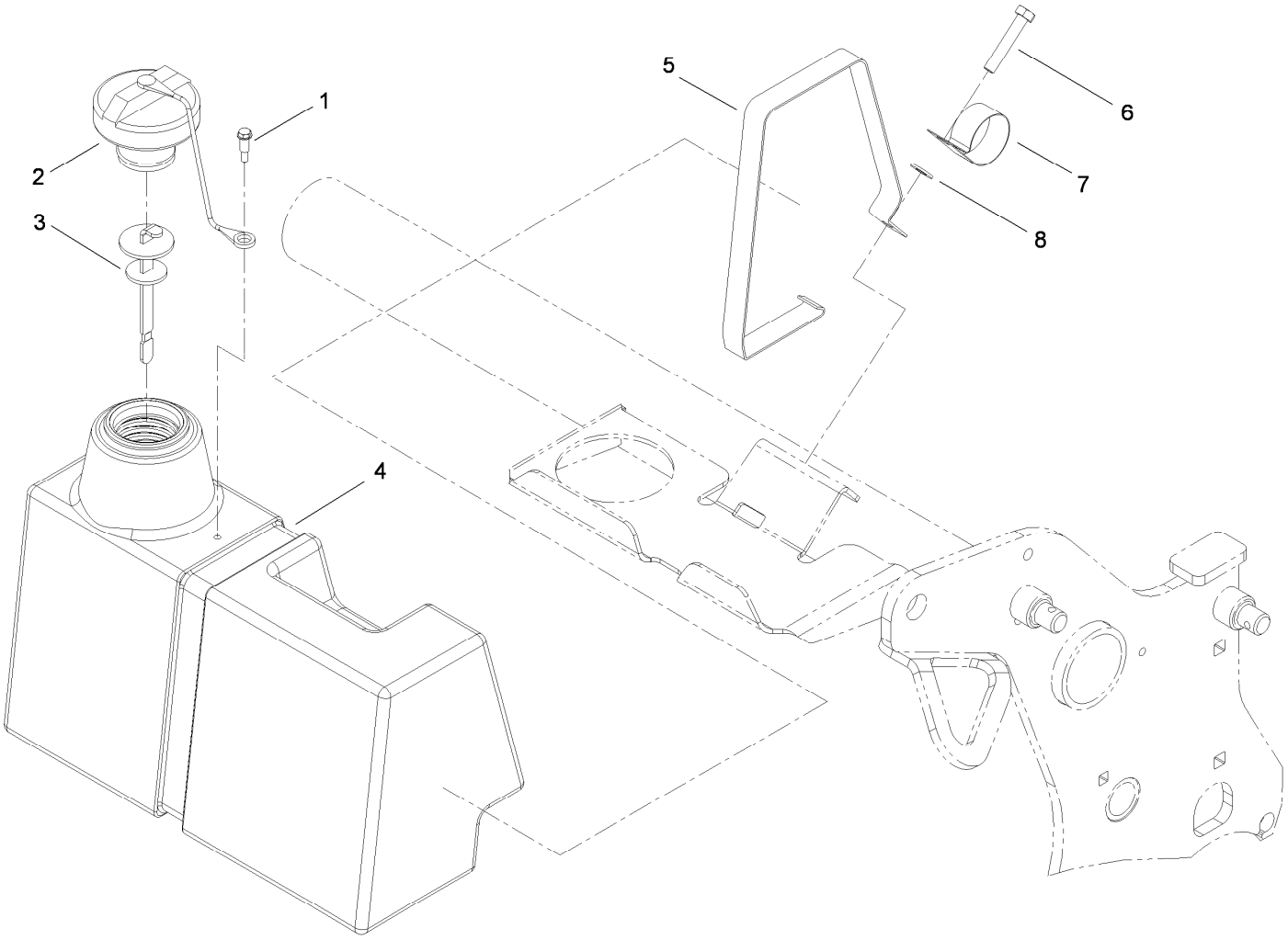

Hydraulic Tank Assembly

Ref.	*Part Number*	*Qty.*	*Description*
1	57-5420	1	Screw-Shoulder
2	93-7160	1	Cap-Oil, HYD
3	106-8811	1	Dipstick ASM
4	106-8877	1	Reservoir-Oil, HYD
5	94-4642-03	1	Strap-Tank, HYD
6	322-41	1	Screw-HH
7	2412-150	1	Clip-J
8	3256-23	1	Washer-Plain

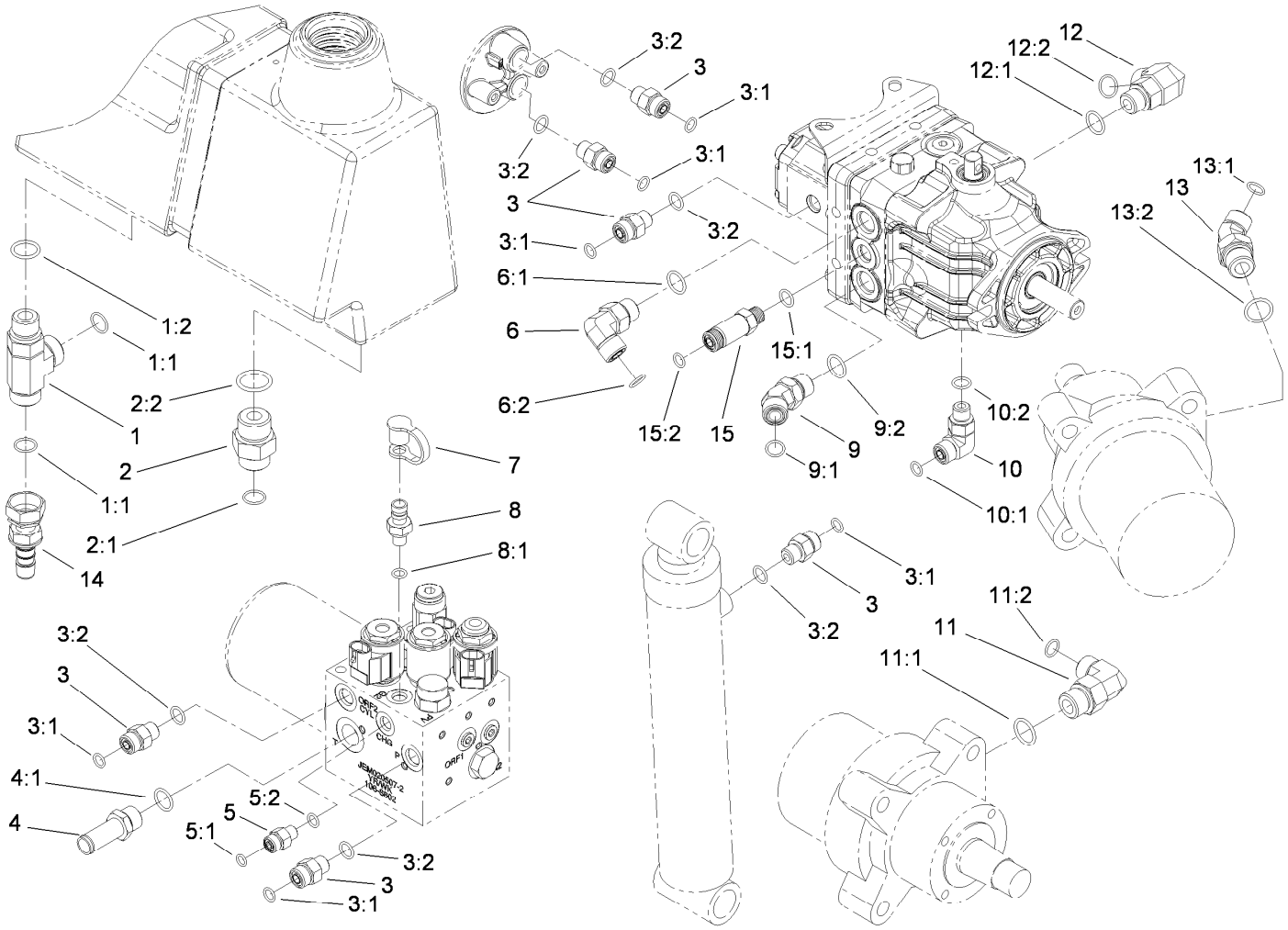

Hydraulic Fitting Assembly

Ref.	Part Number	Qty.	Description
1	340-22	1	Fitting-Tee
1:1	237-65	2	O-Ring
1:2	237-80	1	O-Ring
2	340-8	1	Fitting-Straight
2:1	237-65	1	O-Ring
2:2	237-81	1	O-Ring
3	340-2	6	Fitting-Straight
3:1	237-22	1	O-Ring
3:2	237-42	1	O-Ring
4	107-7569	1	Fitting-STR
4:1	237-79	1	O-Ring
5	340-88	1	Fitting-Straight
5:1	237-22	1	O-Ring
5:2	237-78	1	O-Ring
6	340-98	1	Fitting-Elbow, 90 DEG
6:1	237-79	1	O-Ring
6:2	237-30	1	O-Ring
7	354-79	2	Cap-Dust
8	354-77	2	Fitting-Quick
8:1	237-78	1	O-Ring

Ref.	Part Number	Qty.	Description
9	340-101	1	Fitting-HYD, 45 DEG
9:1	237-30	1	O-Ring
9:2	237-79	1	O-Ring
10	340-77	1	Fitting-Elbow, 90 DEG
10:1	237-22	1	O-Ring
10:2	237-42	1	O-Ring
11	340-105	4	Fitting-Elbow, 90 DEG
11:1	237-80	1	O-Ring
11:2	237-30	1	O-Ring
12	340-153	1	Fitting-Elbow, 90 DEG
12:1	237-79	1	O-Ring
12:2	237-151	1	O-Ring
13	340-89	2	Fitting-HYD, 45 DEG
13:1	237-30	1	O-Ring
13:2	237-80	1	O-Ring
14	107-7568	1	Fitting-HYD, Barbed
15	95-4137	1	Fitting-STR
15:1	237-42	1	O-Ring
15:2	237-22	1	O-Ring

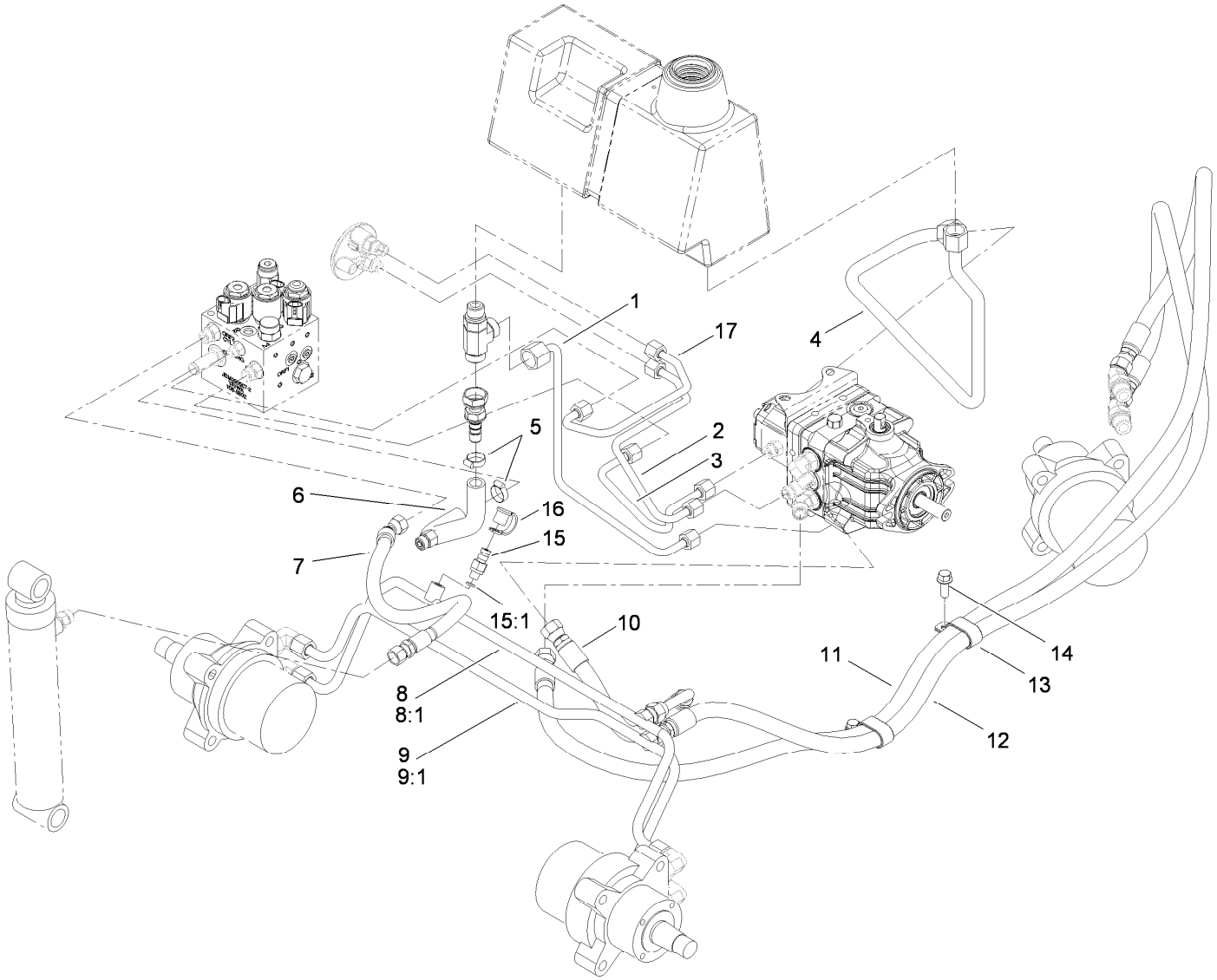

Hardline and Hose Assembly

Ref.	Part Number	Qty.	Description
1	107-3388	1	Tube ASM
2	115-4701	1	Tube-HYD
3	112-6539	1	Tube-HYD
4	107-3387	1	Tube ASM
5	2412-141	2	Clamp-Drive, Worm
6	107-7565	1	Hose-Formed
7	105-3919	1	Hose-HYD
8	106-8819	1	Tube ASM
8:1	237-30	1	O-Ring
9	106-8818	1	Tube ASM

Ref.	Part Number	Qty.	Description
9:1	237-30	1	O-Ring
10	84-0890	1	Hose ASM
11	106-8822	1	Hose ASM
12	106-8821	1	Hose ASM
13	106-8829	2	R Clamp-Double
14	3234-11	2	Screw-HHF
15	354-77	1	Fitting-Quick
15:1	237-78	1	O-Ring
16	354-79	1	Cap-Dust
17	108-6811	1	Tube ASM

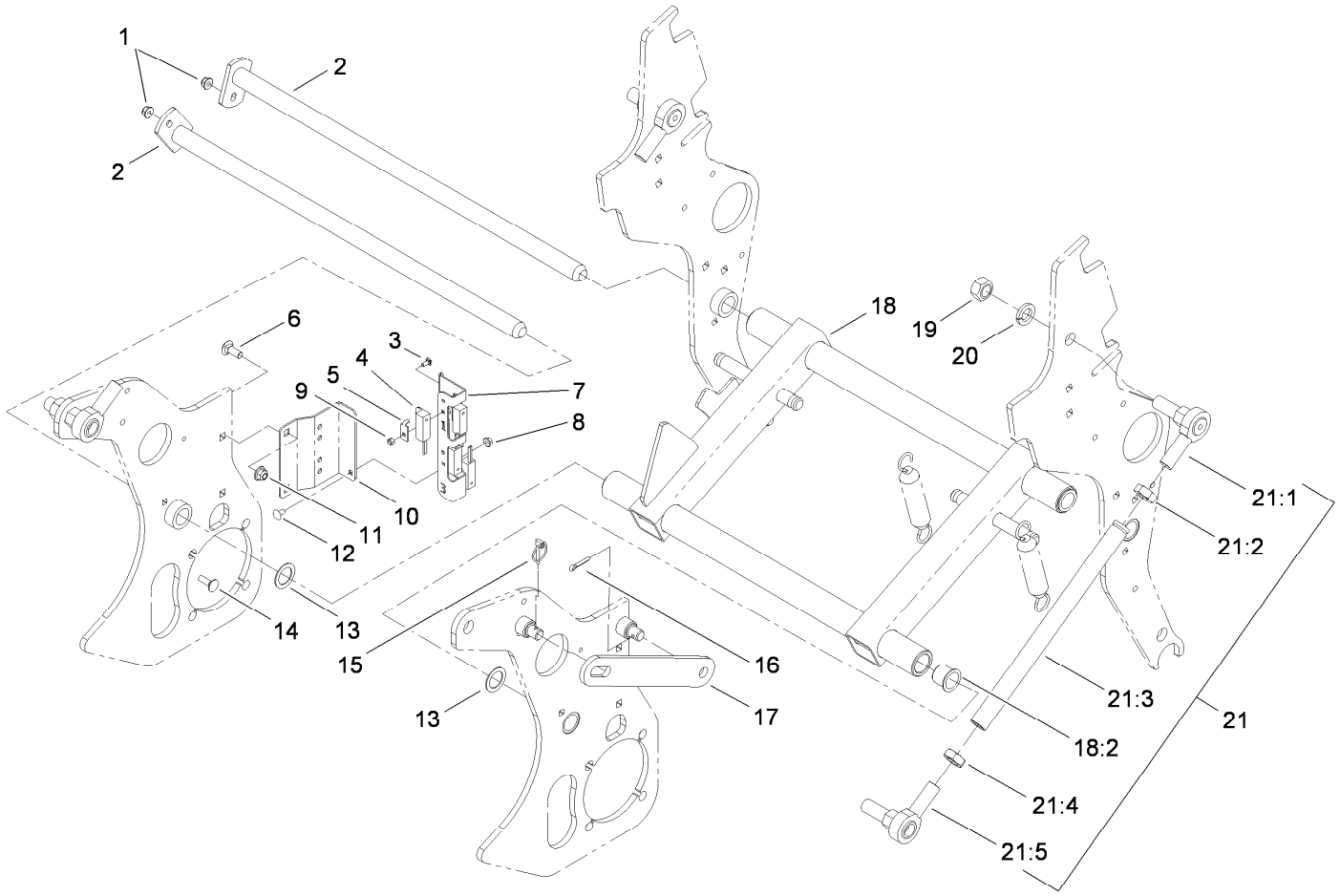

H-Frame Assembly

Ref.	Part Number	Qty.	Description
1	104-8300	2	Nut-HF, NI
2	105-0950	2	Pivot Shaft ASM
3	104-1450	4	Bolt-CARR
4	100-1270	4	Switch-Proximity
5	100-4872	4	Plate-Switch, Neutral
6	3231-2	2	Bolt-CARR
7	108-6732	1	Bracket-Switch
8	32128-10	2	Nut-Lock, HHF
9	3296-2	4	Nut-Lock, NI
10	105-1006-01	1	Bracket-Switch
11	104-8301	2	Nut-HF, NI
12	3229-10	2	Screw-CARR
13	10-8110	3	Washer-Thrust
14	3230-2	2	Bolt-CARR

Ref.	Part Number	Qty.	Description
15	3290-495	1	Pin-Klik
16	3272-21	1	Pin-Cotter
17	105-0983-01	1	Bar-Prop
18	112-6516	1	H Frame ASM
18:2	99-3631	4	Bushing-Flange
19	3219-7	4	Nut-Hex
20	3253-9	4	Washer-Lock
21	114-2702	2	Link ASM
21:1	105-1025	1	End-Rod
21:2	3220-17	1	Nut-Jam, LH
21:3	105-1007	1	Link-Upper
21:4	3220-7	1	Nut-Jam
21:5	2411-40	1	End-Rod

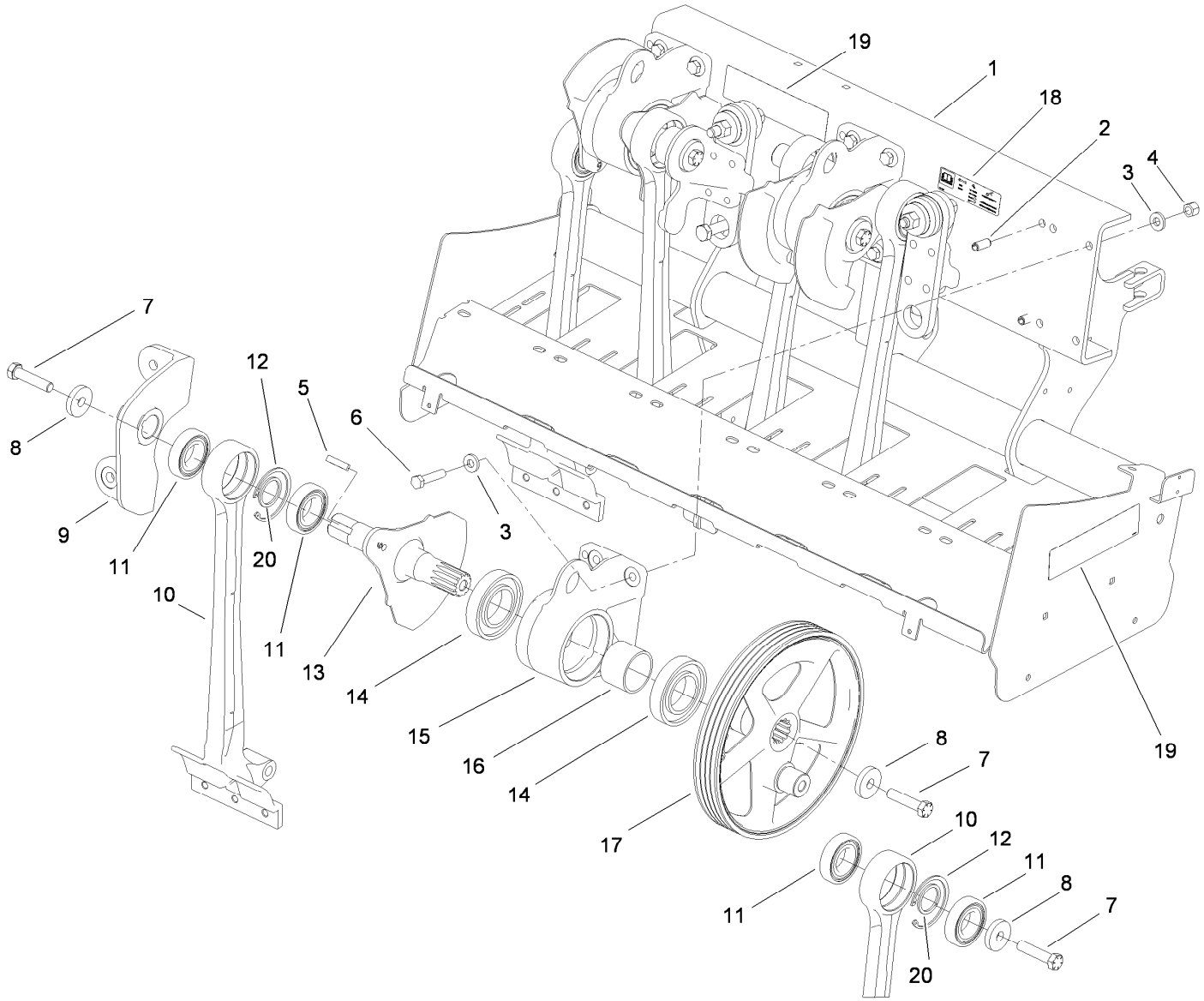

Coring Head Crank No. 1 and 2 Assembly

Ref.	Part Number	Qty.	Description
1	110-1495-01	1	Frame-Rear
2	105-1041	2	Pin-Spring
3	107-3395	8	Washer-Hardened
4	3296-23	4	Nut-Lock, NI
5	110-4546	1	Key-Square
6	325-9	4	Screw-HH
7	110-4614	3	Screw-HH
8	105-1016	3	Washer-Flat
9	110-4567	1	Coupling-No. 2
10	110-4573	2	Arm-Stomper

Ref.	Part Number	Qty.	Description
11	110-4556	4	Bearing-Ball
12	32151-76	2	Ring-Retaining, Internal
13	110-4571	1	Crankarm-No. 2, 4, 6
14	105-0965	2	Bearing-Ball
15	105-0956	1	Housing-Bearing
16	105-1017	1	Spacer
17	114-1458	1	Pulley-Crankshaft
18	110-4664	1	Decal-Torque, Bolt
19	107-7534	3	Decal-Warning
20	110-4557	2	Spacer-Bearing

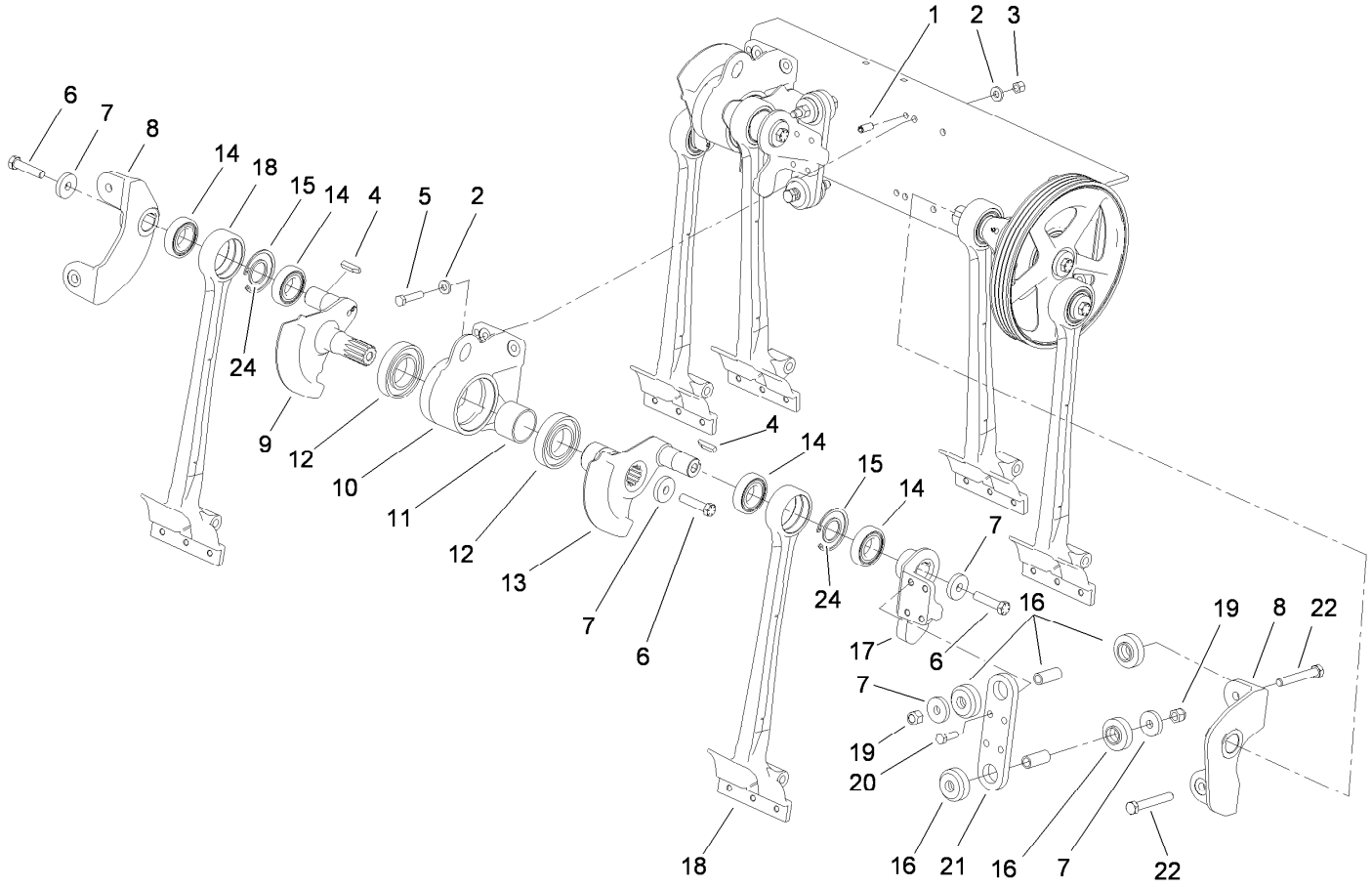

Coring Head Crank No. 3 and 4 Assembly

Ref.	Part Number	Qty.	Description
1	105-1041	2	Pin-Spring
2	107-3395	8	Washer-Hardened
3	3296-23	4	Nut-Lock, NI
4	110-4546	2	Key-Square
5	325-9	4	Screw-HH
6	110-4614	3	Screw-HH
7	105-1016	3	Washer-Flat
8	110-4569	1	Coupling-No.4
9	110-4571	1	Crankarm-No. 2, 4, 6
10	105-0956	1	Housing-Bearing
11	105-1017	1	Spacer
12	105-0965	2	Bearing-Ball

Ref.	Part Number	Qty.	Description
13	110-4572	1	Crankarm-No. 3, 5, 7
14	110-4556	4	Bearing-Ball
15	32151-76	2	Ring-Retaining, Internal
16	105-0963	2	Mount-ISO, Crank
17	110-4568	1	Coupling-No. 3
18	110-4573	2	Arm-Stomper
19	3296-53	2	Nut-Lock, NI
20	325-6	4	Screw-HH
21	105-0974-03	1	Plate-Coupling
22	327-29	2	Screw-HH
24	110-4557	2	Spacer-Bearing

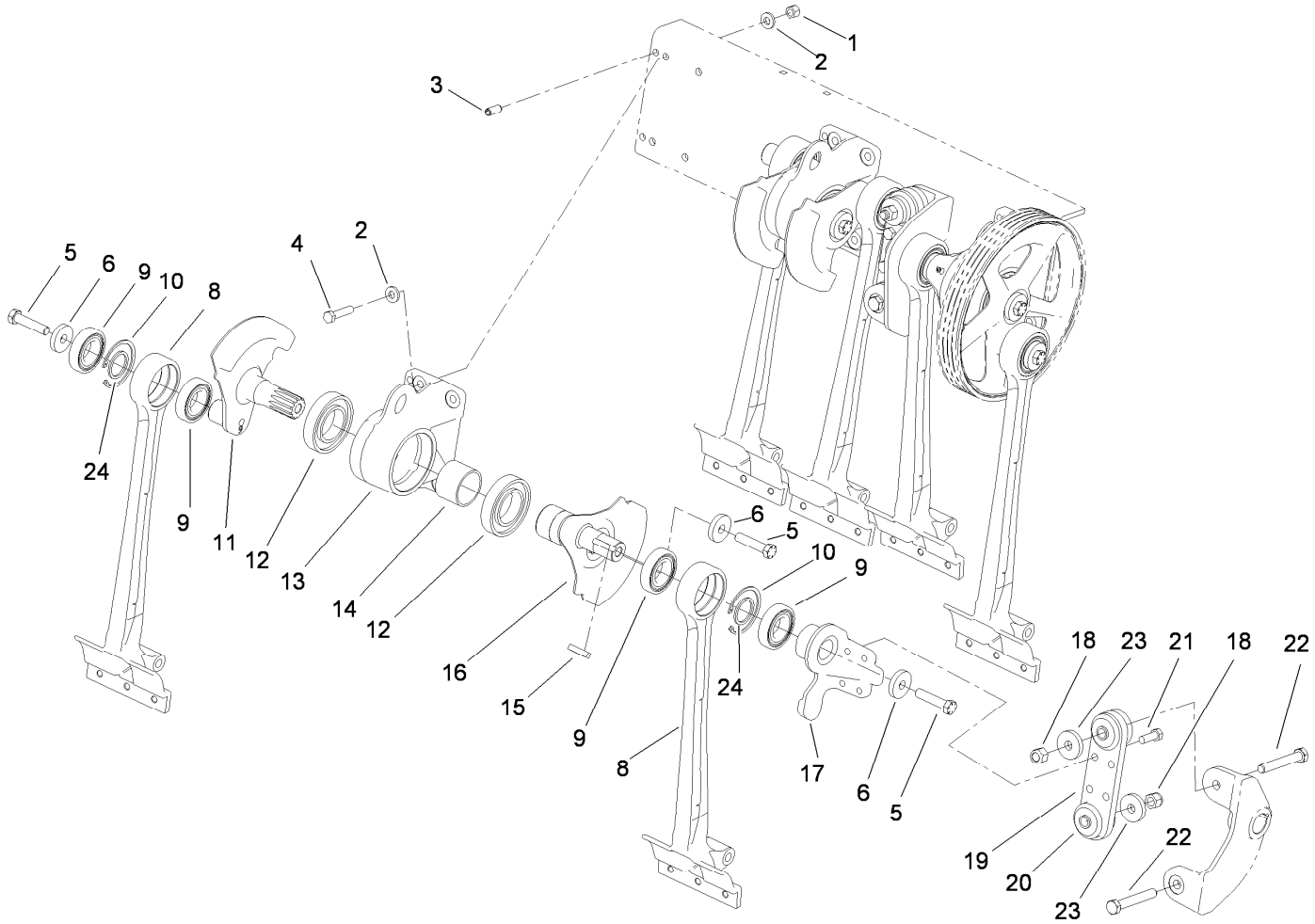

Coring Head Crank No. 5 and 6 Assembly

Ref.	Part Number	Qty.	Description
1	3296-23	4	Nut-Lock, NI
2	107-3395	8	Washer-Hardened
3	105-1041	2	Pin-Spring
4	325-9	4	Screw-HH
5	110-4614	3	Screw-HH
6	105-1016	3	Washer-Flat
8	110-4573	2	Arm-Stomper
9	110-4556	4	Bearing-Ball
10	32151-76	2	Ring-Retaining, Internal
11	110-4576	1	Crankarm-No.6
12	105-0965	2	Bearing-Ball
13	105-0956	1	Housing-Bearing

Ref.	Part Number	Qty.	Description
14	105-1017	1	Spacer
15	110-4546	1	Key-Square
16	110-4572	1	Crankarm-No. 3, 5, 7
17	110-4570	1	Coupling-N0.5
18	3296-53	2	Nut-Lock, NI
19	105-0974-03	1	Plate-Coupling
20	105-0963	2	Mount-ISO, Crank
21	325-6	4	Screw-HH
22	327-29	2	Screw-HH
23	110-4549	2	Washer-Snubbing
24	110-4557	2	Spacer-Bearing

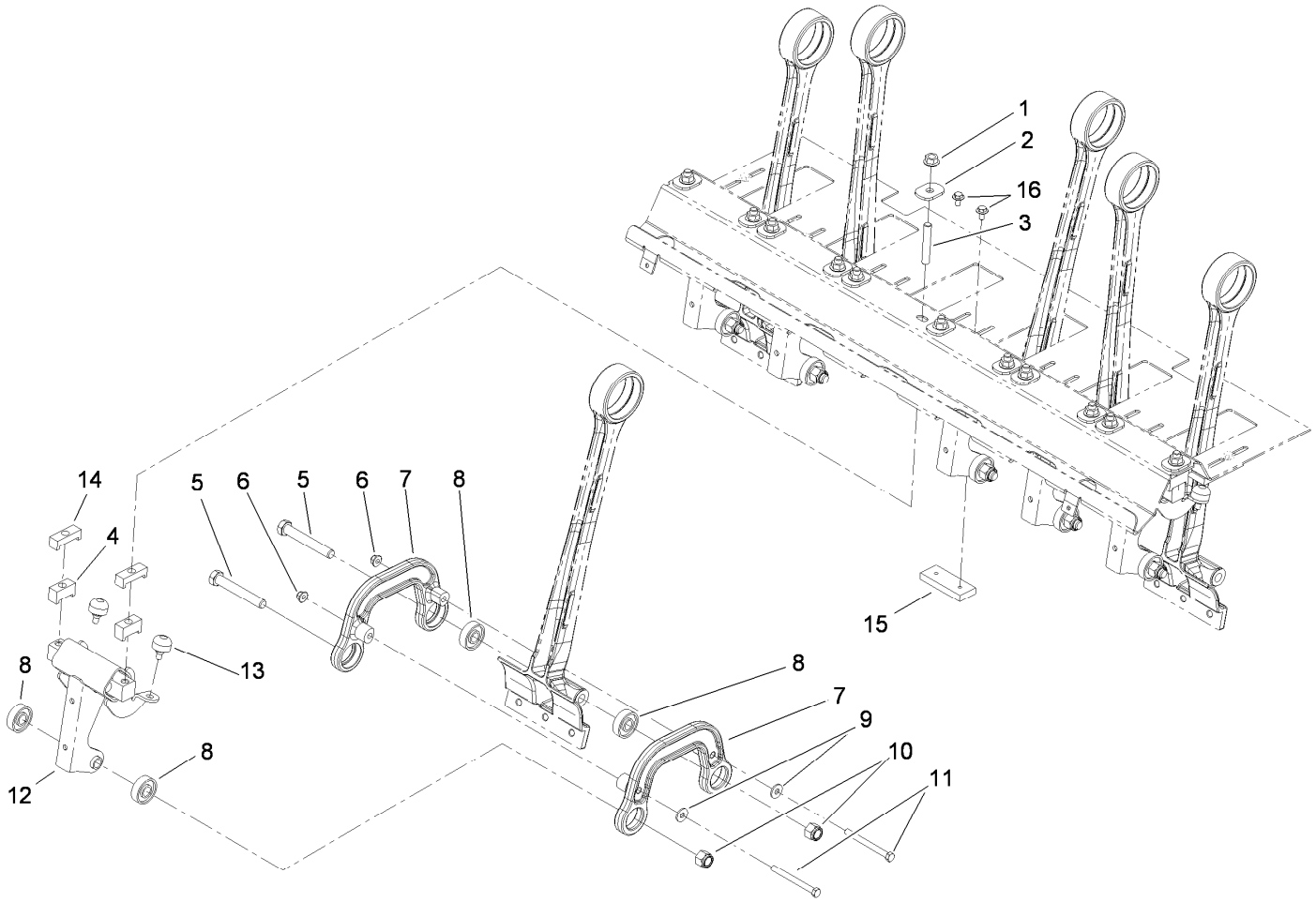

Coring Head Assembly for Rotolinks

Ref.	Part Number	Qty.	Description
1	32128-23	12	Nut-HF
2	107-7543	12	Washer-Hardened
3	105-1088	12	Stud
4	105-0999	12	Standoff-Damper V
5	327-29	12	Screw-HH
6	104-8301	12	Nut-HF, NI
7	105-1000	12	Link-Damper
8	251-311	24	Bearing-Ball

Ref.	Part Number	Qty.	Description
9	80-6990	12	Washer-Hardened
10	3296-53	12	Nut-Lock, NI
11	323-16	12	Screw-HH
12	106-8922	6	Damper
13	87-2440	12	Bumper-Rubber
14	107-7582	12	Spacer-Damper, Top V
15	107-7584	7	Plate-Bumper V
16	3234-7	14	Screw-HHF

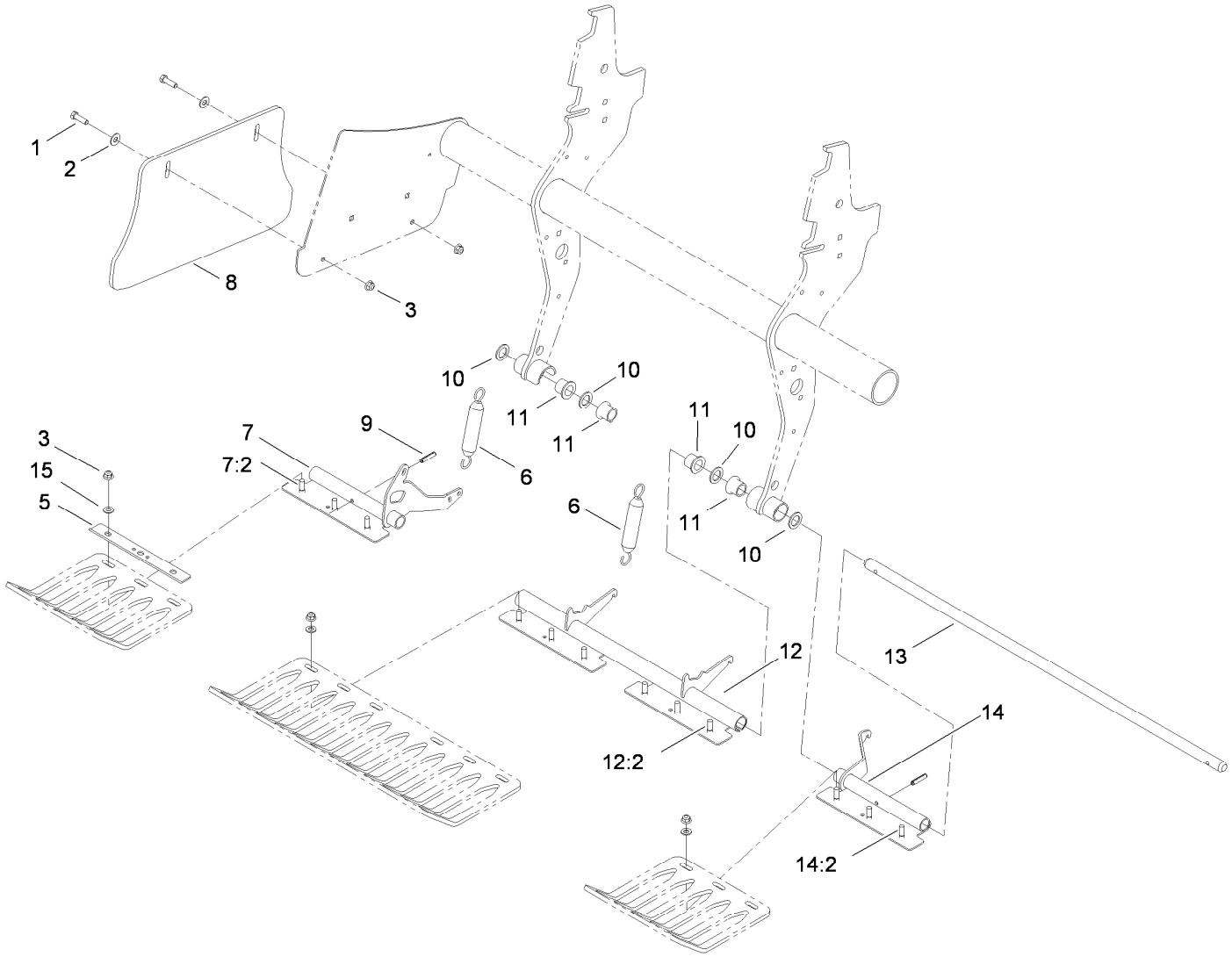

Coring Head Assembly for Turfguards

Ref.	Part Number	Qty.	Description
1	323-7	4	Screw-HH
2	3256-4	4	Washer-Flat
3	104-8301	16	Nut-HF, NI
5	110-4274-03	4	Clamp-Guard, Turf
6	66-4270	2	Spring-Extension
7	110-4395	1	LH Turf Guard Bracket ASM
7:2	110-4268	3	Screw-Neck, Rib
8	105-1069	2	Shield-Side
9	32121-25	2	Pin-Roll

Ref.	Part Number	Qty.	Description
10	3-7898	4	Washer-Thrust
11	107-7581	4	Bushing-Flange, Keyed
12	110-4393	1	Center Turf Guard Bracket ASM
12:2	110-4268	6	Screw-Neck, Rib
13	105-1024	1	Shaft-Guard, Turf
14	110-4394	1	RH Turf Guard Bracket ASM
14:2	110-4268	3	Screw-Neck, Rib
15	3256-24	12	Washer-Flat

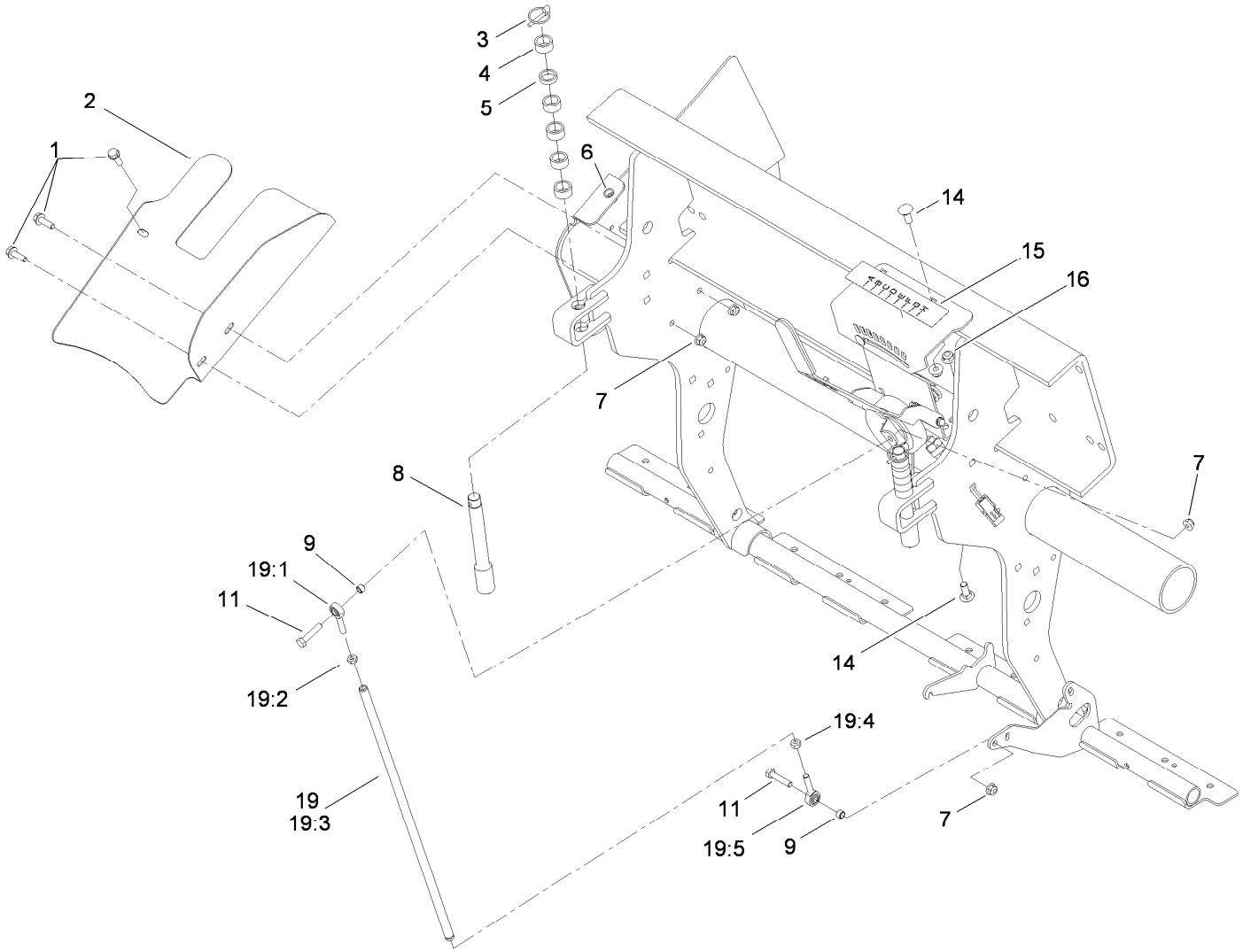

Depth Control Assembly

Ref.	Part Number	Qty.	Description
1	3234-17	3	Screw-HHF
2	105-1092-01	1	Shield-Top, Belt
3	3290-495	2	Pin-Klik
4	74-3730	10	Spacer-Spindle, Rear
5	105-3828	2	Spacer
6	32148-7	1	Nut-Clinch
7	104-8300	4	Nut-HF, NI
8	105-1004	2	Pin-Stop, Depth
9	92-3133	2	Spacer-Lever, Traction
11	322-7	2	Screw-HH

Ref.	Part Number	Qty.	Description
14	3231-2	4	Bolt-CARR
15	106-8853	1	Decal-Control, Depth
16	104-8301	4	Nut-HF, NI
19		1	Link ASM ●
19:1	2411-52	1	Bearing-Rod End, RH
19:2	3220-2	1	Nut-Jam
19:3	105-1067	1	Tube-Control, Depth
19:4	3220-20	1	Nut-Jam
19:5	2411-53	1	Bearing-Rod End, LH

● Not serviced separately

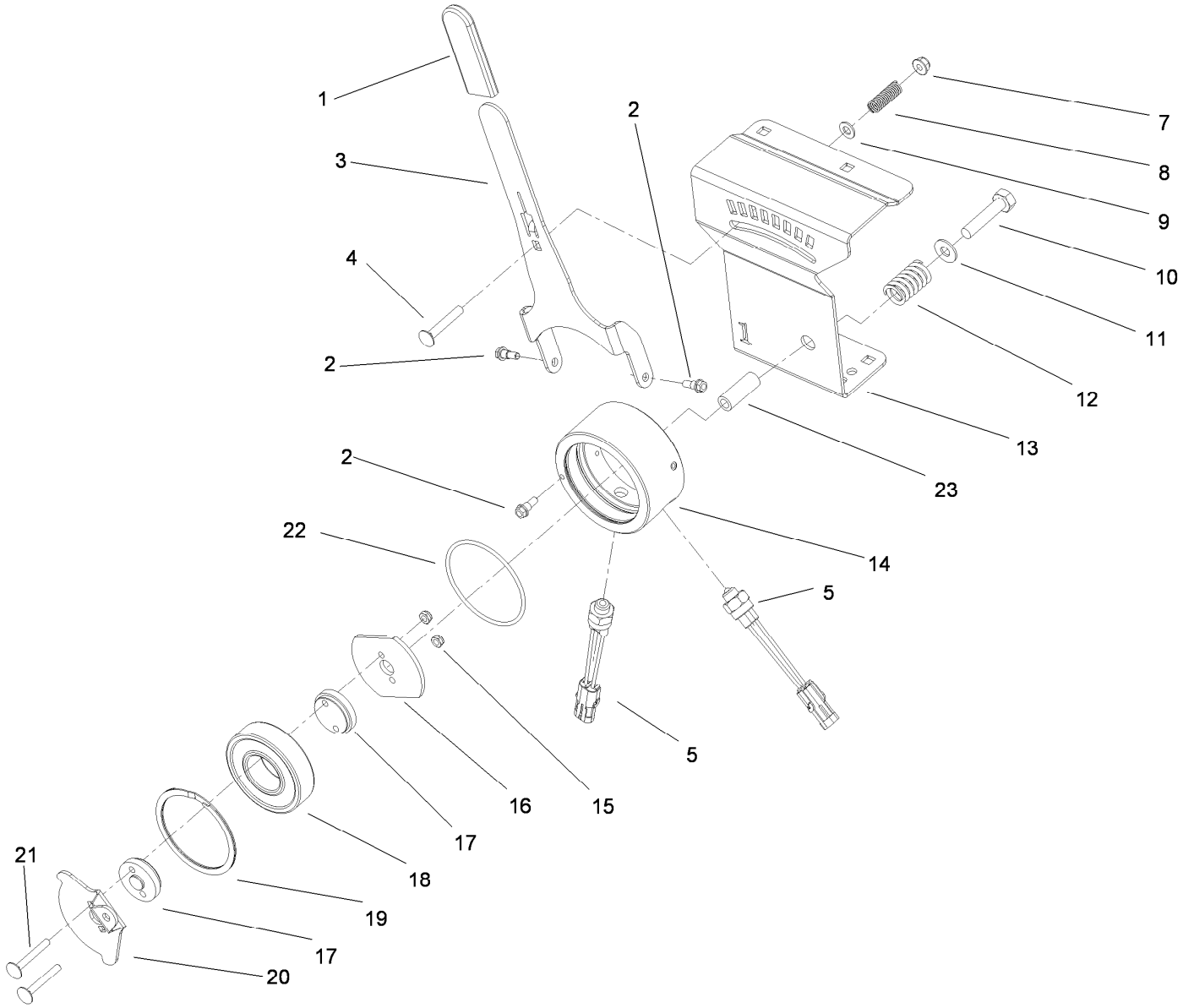

Depth Actuator Assembly

Ref.	Part Number	Qty.	Description
1	21-1880	1	Grip-Handle
2	42-3560	3	Bolt-Shoulder
3	106-8860-03	1	Arm-Control, Depth
4	3230-6	1	Bolt-CARR
5	72-4320	2	Switch-Ball
7	104-8300	1	Nut-HF, NI
8	95-1821	1	Spring-Compression
9	3256-23	1	Washer-Plain
10	322-11	1	Screw-HH
11	3256-4	1	Washer-Flat
12	66-9010	1	Spring-Compression

Ref.	Part Number	Qty.	Description
13	106-8865-03	1	Support-Control, Depth
14	108-2129	1	Housing-Control, Depth
15	3296-56	2	Nut-Lock, NI
16	106-8864	1	Actuator-Switch
17	106-8863	2	Spacer-Control, Depth
18	106-8871	1	Bearing-Ball
19	106-8872	1	Ring-Retaining
20	106-8861-03	1	Arm-Actuator, Switch
21	3230-33	2	Screw-CARR
22	237-33	1	O-Ring
23	95-6448	1	Spacer

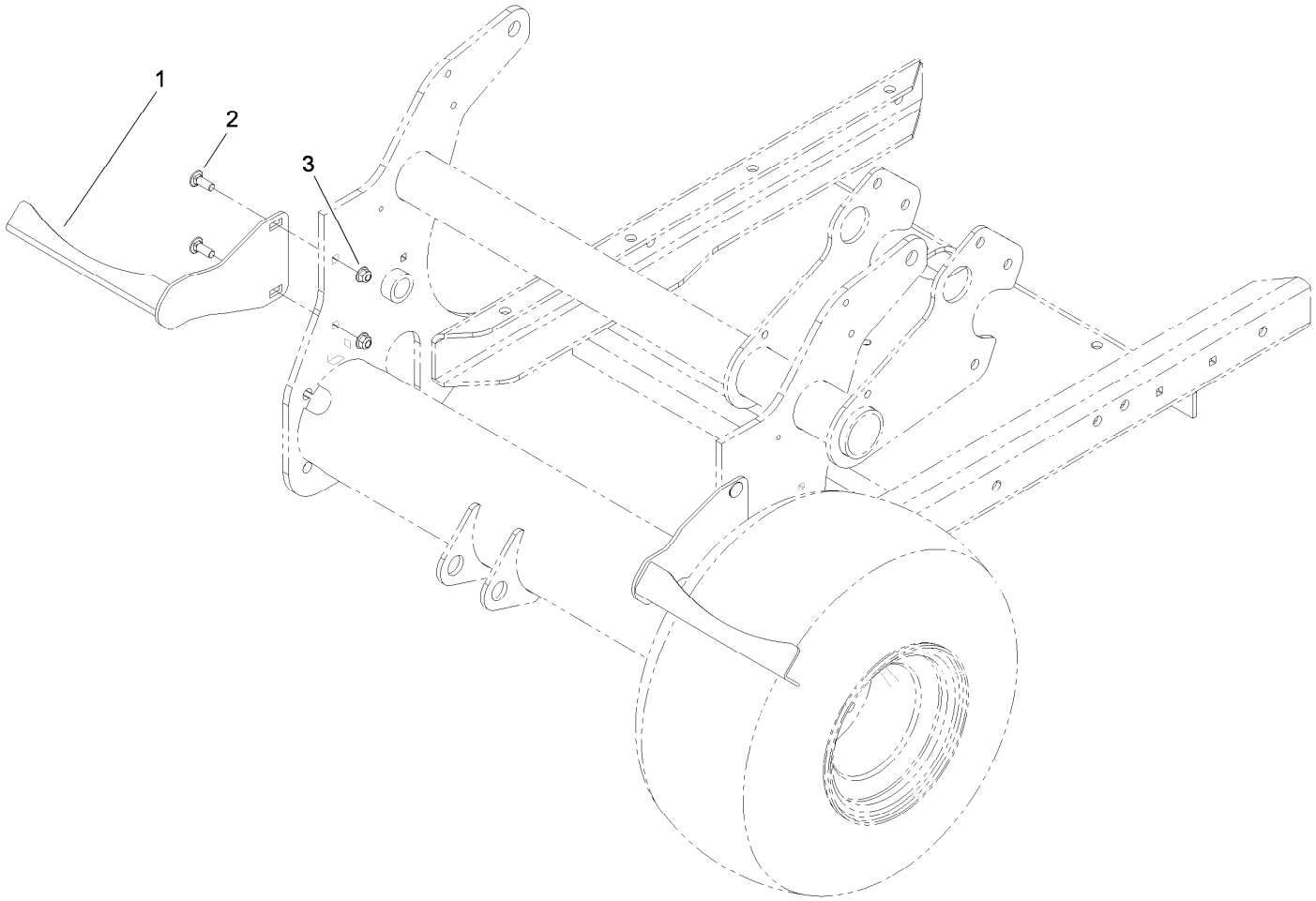

Tire Scraper Assembly (Model 09225)

Ref.	*Part Number*	*Qty.*	*Description*
1	107-7531-03	2	Scraper-Wheel
2	3231-26	4	Screw-CARR
3	104-8301	4	Nut-HF, NI

Attachments and Accessories

For 09200 ProCore 648 Aerator

Product Name	Model/Part
Windrower Kit	09220
Tire Scraper Kit	09225
Rear Roller Kit	09234
Three-Tine Head Quick Lock	09711
Four-Tine Head Quick Lock	09719
2 x 5 Mini Tine Head	09736
1 x 6 Mini Tine Head	09737
Needle Tine Head	09739
3/4in Three-Tine Head	09794
3/4in Four-Tine Head	09796
7/8in Three-Tine Head	09797
Red Gas Cap	107-2173
Yellow Hydraulic Fluid Cap (Tethered)	107-2174
Premium Engine Oil, 10w30 (55 Gallon Drum)	108-1179
Premium Engine Oil, 10w30 (5 Gallon Pail)	108-1180
Premium Transmission/Hydraulic Tractor Fluid (55 Gallon Drum)	108-1183
Premium Transmission/Hydraulic Tractor Fluid (5 Gallon Pail)	108-1184
Premium All Purpose Grease (Tube)	108-1190
Coring Head Bearing Kit	108-2132
3-Tine Turf Guard (Short)	110-4357
3-Tine Turf Guard (Long)	110-4358
4-Tine Turf Guard (Short)	110-4361
4-Tine Turf Guard (Long)	110-4362
Mini Turf Guard (Short)	110-4365
Mini Turf Guard (Long)	110-4366
6-Tine Turf Guard (Short)	110-4369
6-Tine Turf Guard (Long)	110-4370
Sleeve Tool ASM	114-0590-01
Screen-Silencer, Exhaust	93-9911
60 LB Weight	99-6166-01

Notes:

Notes:

Notes:

TORO®

Count on it.