Form No. 3356-396 Rev C

TORO®

Count on it.

Parts Catalog

ProCore® 648 Aerator

Model No. 09200—Serial No. 270000001 and Up

Register at www.Toro.com.
Original Instructions (EN)

3356-396 C

Ordering Replacement Parts

To order replacement parts, please supply the part number, the quantity, and the description of each part desired.

Understanding Reference Numbers

Each identified part in an illustration has a reference number. The reference number for a part also appears in the parts list, along with other information about the part.

This catalog uses two special reference number formats, one to indicate parts in a service assembly and another to indicate the quantity of a given part in an illustration.

Service Assembly Reference Numbers

Parts in service assemblies have reference numbers in the form a:b. The a represents the reference number of the entire service assembly and the b represents a sequential number unique to each part within the service assembly.

For example, a wheel assembly might be identified by reference number 6, the tire by 6:1, the valve by 6:2, and the wheel by 6:3. When you order the assembly identified by reference number 6, you receive all parts identified by reference numbers 6:1,6:2, and 6:3. However, you may also order any part individually. Reference numbers of this type appear in illustration and in parts lists.

Reference Numbers Indicating Quantity

In an illustration, if a reference number indicates more than one part, the reference number has the form nX y. The n represents the quantity of the part, the X is the multiplication symbol, and the y represents the reference number.

For example, in an illustration, the reference number 2X 37 means that two of the parts identified by reference number 37 are indicated.

Contents

Control Bail Assembly . . . 4
Front Handle Assembly . . . 5
Front Fork Assembly . . . 6
Fuel Tank Assembly . . . 7
Console Assembly . . . 8
Console Electrical Assembly . . . 9
Line Marker Assembly . . . 10
Engine and Muffler Assembly . . . 11
Rear Hood and Muffler Shield Assembly . . . 12
Shield Assembly No. 107-7546 . . . 13
Jackshaft Hood Assembly . . . 14
Primary Belt Drive Assembly . . . 15
Secondary Belt Drive Assembly . . . 16
Hydrostat Control Assembly . . . 17
Hydrostat Pump Assembly . . . 18
Hydrostat and Pump Assembly No. 108-6800 . . . 19
Lift System Assembly . . . 20
Hydraulic Cylinder Assembly No. 105-1030 . . . 21
Control Manifold Assembly No. 106-8802 . . . 22
Wheel and Motor Assembly . . . 23
Hydraulic Motor Assembly No. 106-8806, 106-8807 and 106-8808 . . . 24
Brake Latch Assembly . . . 25
Hydraulic Tank Assembly . . . 26
Hydraulic Fitting Assembly . . . 27
Hydraulic Line and Hose Assembly . . . 28
H-Frame Assembly . . . 29
Coring Head Crank No. 1 and 2 Assembly . . . 30
Coring Head Crank No. 3 and 4 Assembly . . . 31
Coring Head Crank No. 5 and 6 Assembly . . . 32
Coring Head Roto Link Assembly . . . 33
Coring Head Turf Guard Assembly . . . 34
Depth Control Assembly . . . 35
Depth Actuator Assembly . . . 36
Needle Tine Holder Model No. 09221 (Optional) . . . 37
Mini Tine, 2 X 5 Holder Model No. 09222 (Optional) . . . 38
Mini Tine, 1 X 6 Holder Model No. 09233 (Optional) . . . 39
Three Tine, 3/4 Inch Holder Model No. 09223 (Optional) . . . 40
Four Tine, 3/4 Inch Holder Model No. 09224 (Optional) . . . 41
Three Tine, 7/8 Inch Tine Holder Model No. 09226 (Optional) . . . 42
Tire Scraper Model No. 09225 (Optional) . . . 43
Crankshaft Assembly Kohler CH23S 76585 . . . 44
Crankcase Assembly Kohler CH23S 76585 . . . 45
Oil Pan and Lubrication Assembly Kohler CH23S-76585 . . . 46
Head / Valve / Breather Assembly Kohler CH23S 76585 . . . 47
Ignition / Electrical Assembly Kohler CH23S 76585 . . . 49
Blower Housing and Baffle Assembly Kohler CH23S 76585 . . . 50
Starting System Assembly Kohler CH23S 76585 . . . 51
Fuel System Assembly Kohler CH23S 76585 . . . 52
Engine Control Assembly Kohler CH23S 76585 . . . 53
Air Intake / Filtration Assembly Kohler CH23S 76585 . . . 54
Exhaust Assembly Kohler CH23S 76585 . . . 55
Attachments and Accessories . . . 56

© 2019—The Toro® Company

8111 Lyndale Avenue South
Bloomington, MN 55420

Contact us at www.Toro.com.
Printed in the USA.

All Rights Reserved

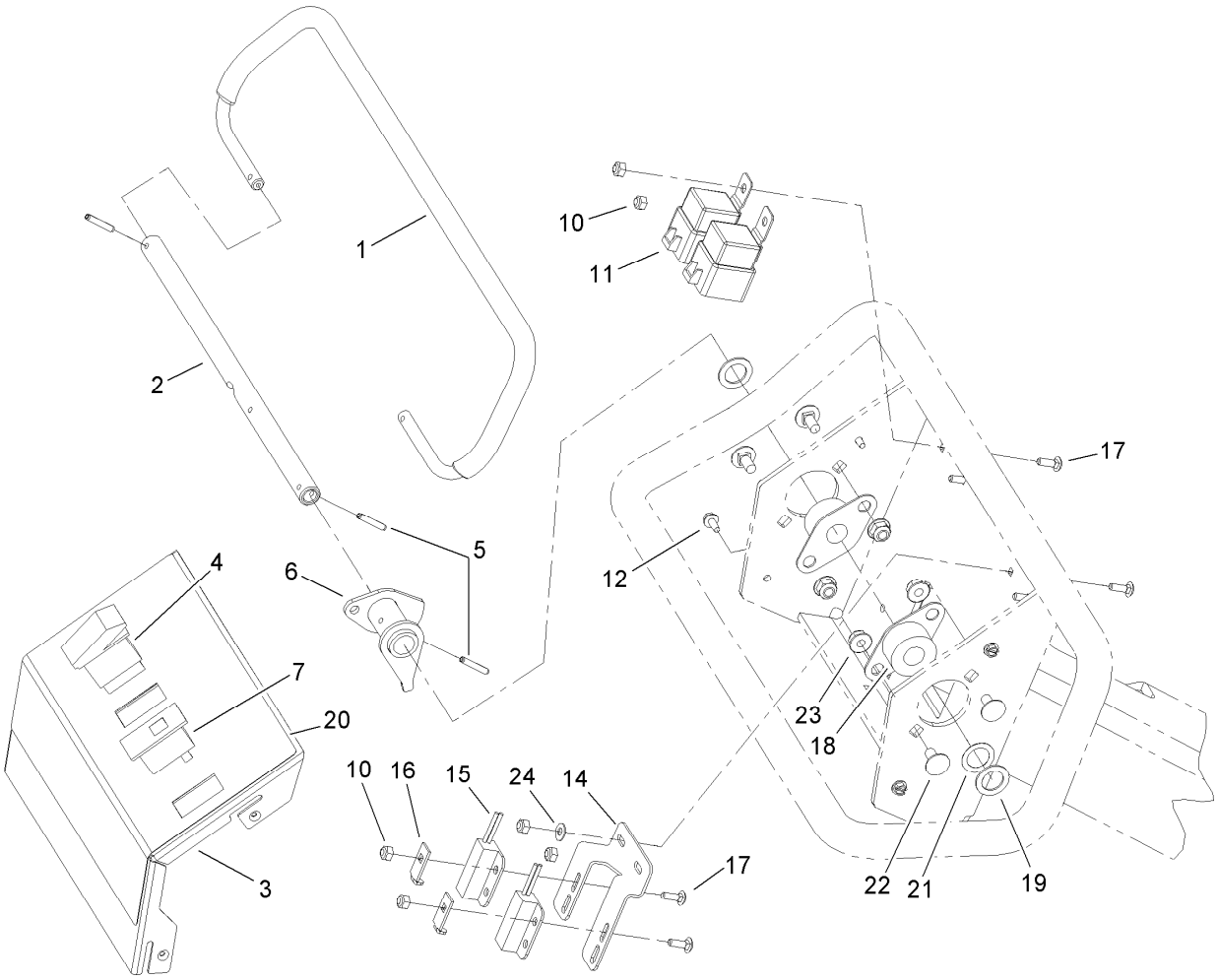

Control Bail Assembly

Ref.	Part Number	Qty.	Description
1	106-8948	1	Handle-Traction
2	107-3350	1	Shaft-Pivot, Bail V
3	105-1183-03	1	Cover-Handle, Control
4	106-8921	1	Switch-Rocker, Off-On
5	32121-45	3	Pin-Spring
6	107-3351	1	Bail Lever ASM
7	99-7410	1	Indicator-Light, Low-Oil Pressure
10	3296-2	6	Nut-Lock, NI
11	99-7430	2	Relay-Mini
12	32104-60	4	Screw-HWH
14	107-3361	1	Mount-Switch
15	100-1270	2	Switch-Proximity
16	100-4872	2	Plate-Switch, Neutral
17	3229-34	6	Screw-CARR
18	256-236	2	Bearing-Mount, Flange
19	3256-69	2	Washer-Flat
20	106-8855	1	Decal-Console, Handle
21	108-2100	1	Washer-Spring, Curved
22	3230-18	4	Screw-CARR
23	104-8300	4	Nut-HF, NI
24	3256-14	2	Washer-Flat

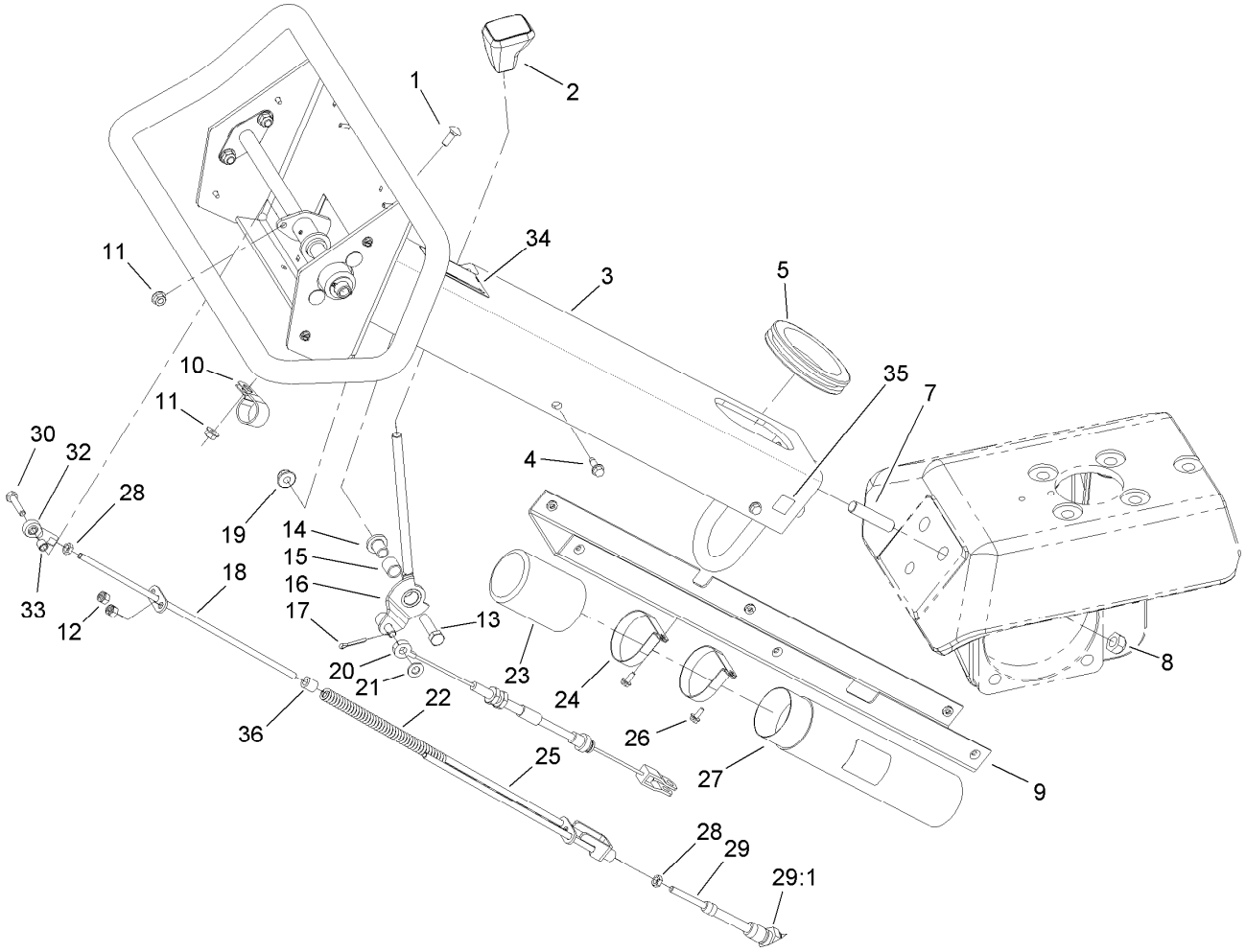

Front Handle Assembly

Ref.	Part Number	Qty.	Description
1	3229-1	1	Bolt-CARR
2	65-8970	1	Knob-Shift
3	105-1194-01	1	Control Handle ASM
4	32144-44	6	Screw-HWH, Thread Roll
5	240-8	1	Grommet-Rubber
7	80-8680	3	Stud
8	3296-19	3	Nut-Hex
9	107-3363-03	1	Cover-Lower, Handle
10	2412-39	1	Clamp-R
11	32128-33	2	Nut-HF
12	3296-3	2	Nut-Lock
13	323-8	1	Screw-HH
14	80-7200	1	Spacer-Brake
15	256-206	1	Bushing
16	86-8420	1	Lever-Brake
17	3272-10	1	Pin-Cotter
18	107-3354	1	Override Rod ASM
19	104-8301	1	Nut-HF, NI

Ref.	Part Number	Qty.	Description
20	106-8896	1	Cable-Latch, Parking
21	3256-23	1	Washer-Plain
22	107-3373	1	Spring-Compression
23	104-7048	1	Cap-Housing
24	2412-120	2	Clamp-R
25	107-3360	1	Spring Retainer ASM
26	32104-60	2	Screw-HWH
27	104-7050	1	Tube-Manual
28	3220-1	2	Nut-Jam
29	80-7220	1	Cable-Control, Stroke
29:1	3220-6	4	Nut-Jam
30	321-8	1	Screw-HH
32	2411-41	1	Rod End-Ball Joint
33	99-3545	1	Spacer
34	93-9363	1	Decal-Brake, Parking
35	93-9084	3	Decal-Point, Lift
36	22-7810	1	Spacer

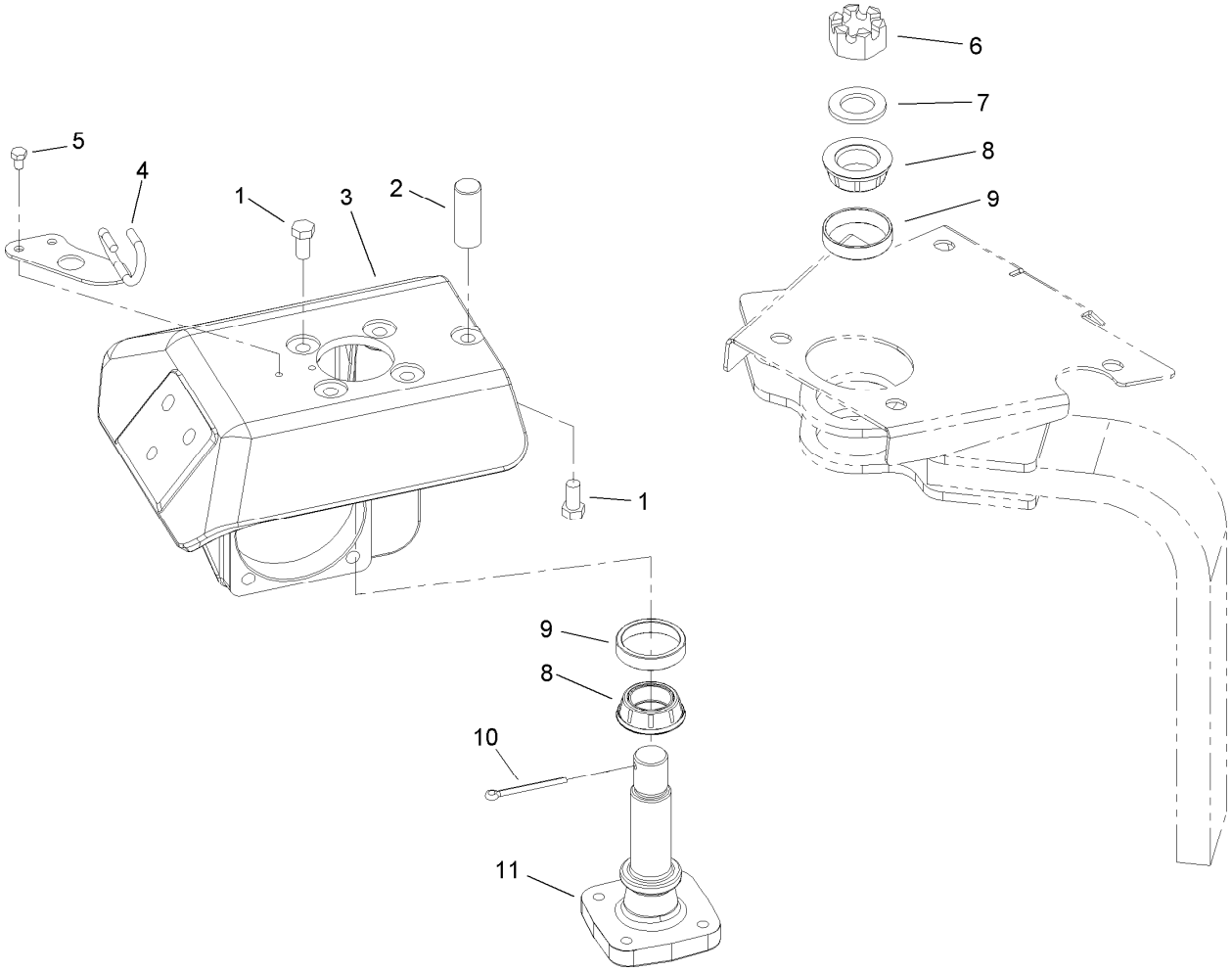

Front Fork Assembly

Ref.	*Part Number*	*Qty.*	*Description*
1	325-4	5	Screw-HH
2	106-8939	1	Stop-Steering
3	108-1252-01	1	Arm-Steering
4	106-8937	1	Cable Guide ASM
5	322-1	2	Screw-HH
6	32136-9	1	Nut-Hex, Slotted
7	107-7597	1	Washer-Plain
8	107-7589	2	Cone-Bearing (W/ Seal)
9	107-7590	2	Cup-Bearing
10	3272-37	1	Pin-Cotter
11	107-7595-03	1	Spindle-Steer

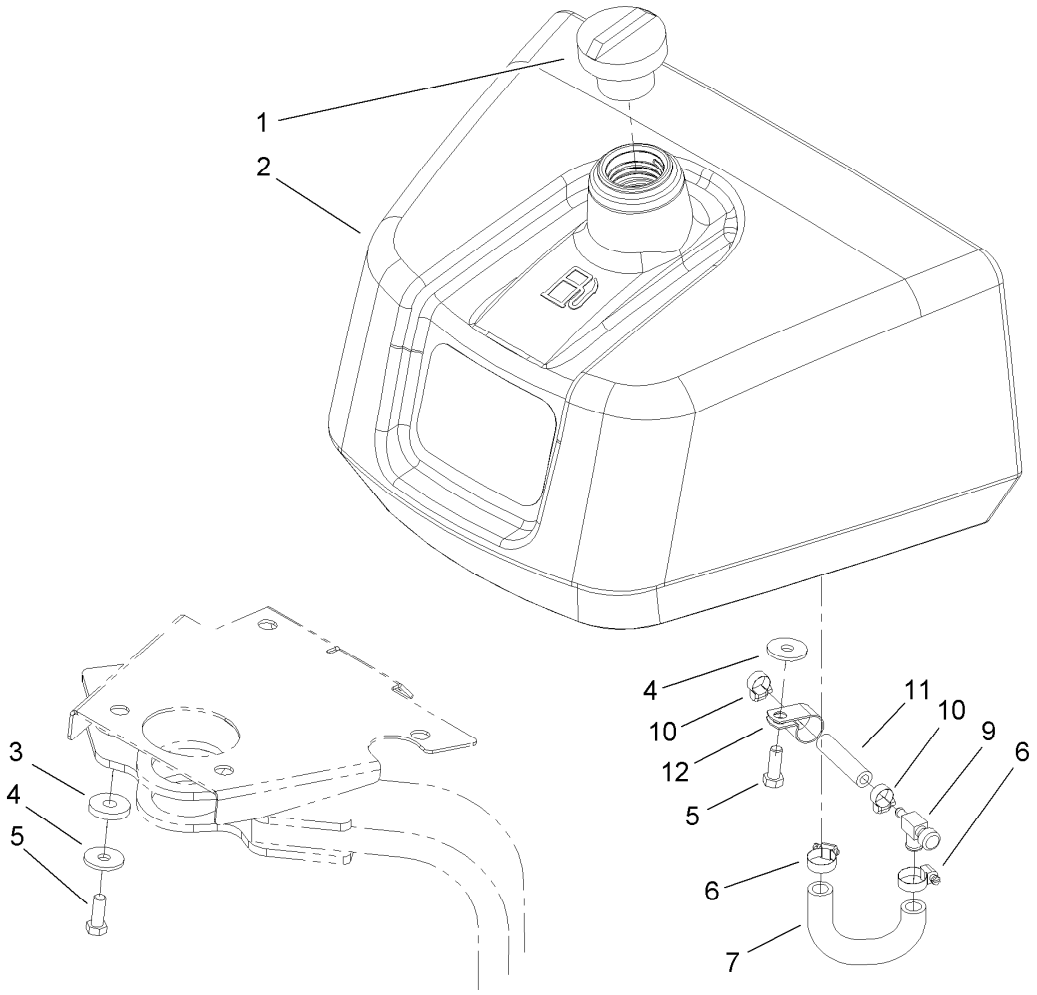

Fuel Tank Assembly

Ref.	*Part Number*	*Qty.*	*Description*
1	93-7170	1	Cap-Fuel
2	105-8266	1	Tank-Fuel
3	240-11	4	Bushing-Flange
4	63-8410	4	Washer
5	323-6	4	Screw-HH
6	2412-36	2	Clamp-Hose
7	108-6818	1	Hose-Fuel, Molded
9	83-1390	1	Valve-Shut-Off, Fuel
10	2412-108	2	Clamp-Worm
11	110-0047	1	Hose-Fuel
12	2412-41	1	Clamp-R

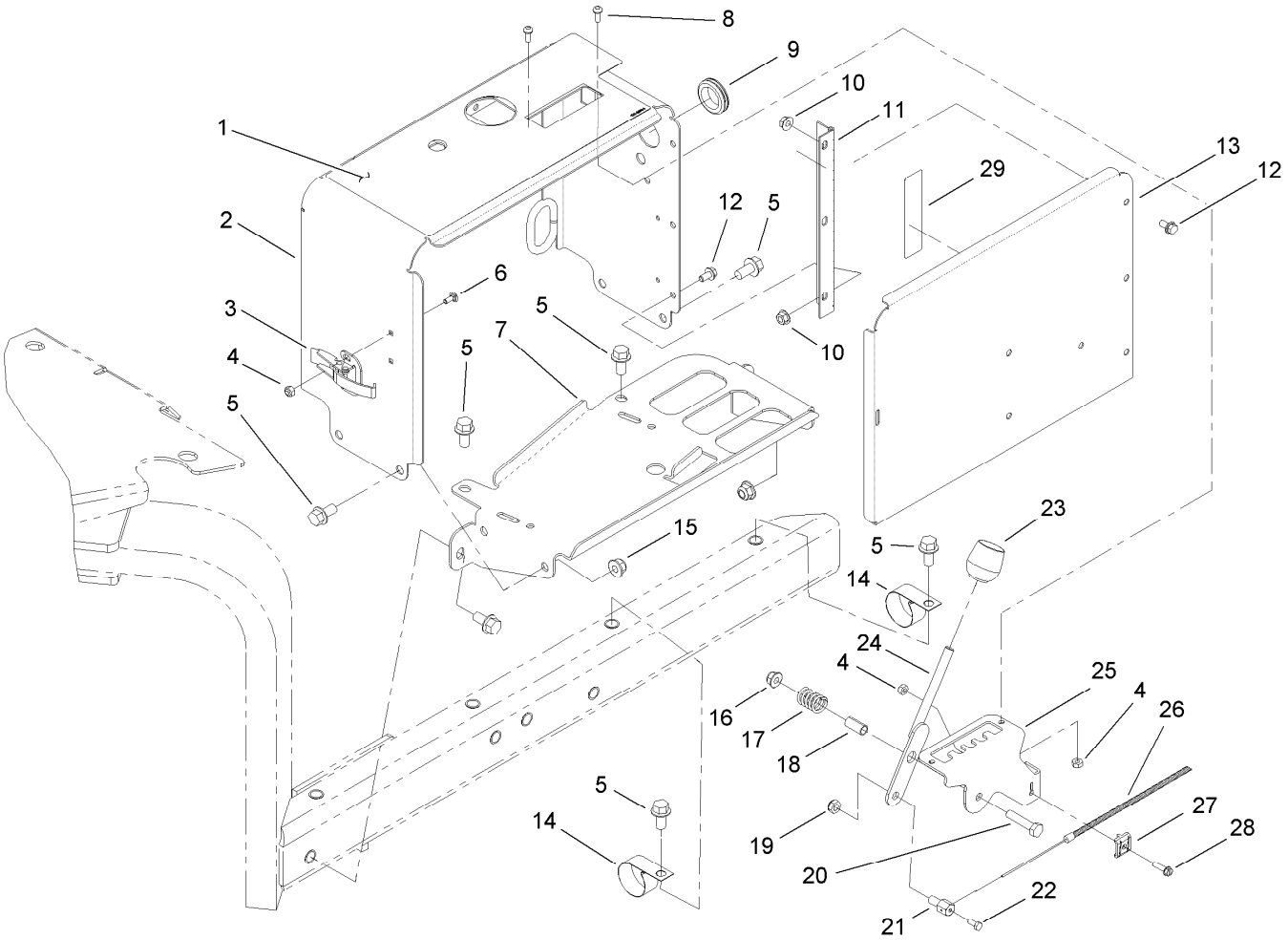

Console Assembly

Ref.	Part Number	Qty.	Description
1	106-8854	1	Decal-Console, Main
2	105-1175-01	1	Console
3	249-21	1	Clamp-Slotted
4	3296-2	6	Nut-Lock, NI
5	3234-1	10	Screw-HHF
6	104-1450	2	Bolt-CARR
7	105-1182-01	1	Base-Console
8	3250-12	3	Screw-PPH
9	240-5	1	Grommet
10	32128-33	6	Nut-HF
11	106-8908	1	Hinge-Console
12	3234-13	6	Screw-HHF
13	105-1171-01	1	Cover-Console
14	2412-150	2	Clip-J
15	104-8301	4	Nut-HF, NI
16	104-8300	1	Nut-HF, NI
17	20-6110	1	Spring-Compression
18	40-8130	1	Spacer
19	3296-20	1	Nut-Lock, NI
20	322-7	1	Screw-HH
21	98-9311	1	Swivel-Throttle
22	25-8640	1	Screw-HH
23	233-37	1	Knob
24	105-1167	1	Spacing Lever ASM
25	105-1166-03	1	Bracket-Lever, Spacer
26	105-1062	1	Cable-Control, Spacing
27	81-1690	1	Clamp-Cable
28	32105-13	1	Screw-HWH
29	107-7555	1	Decal-Block, Fuse

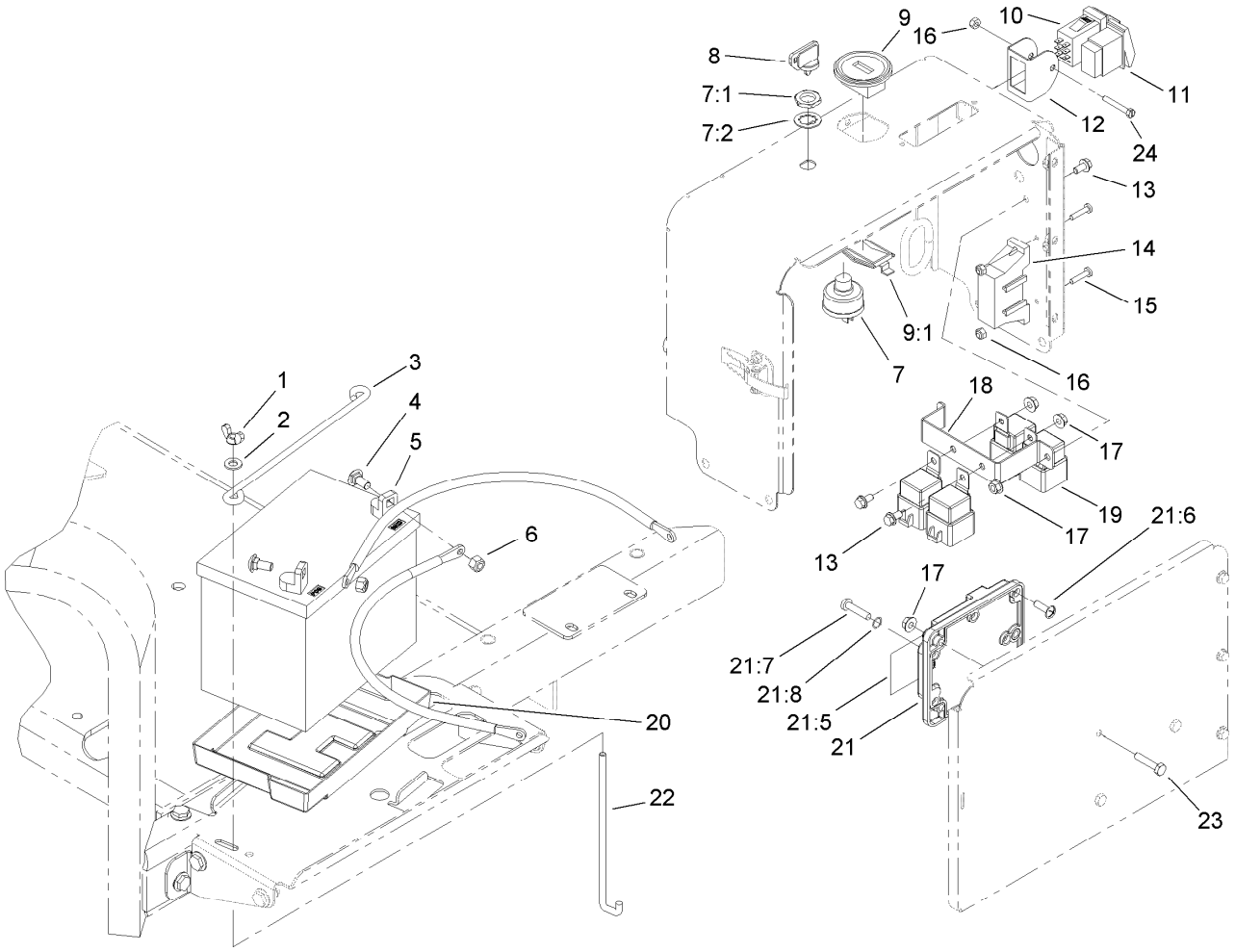

Console Electrical Assembly

Ref.	Part Number	Qty.	Description
1	32103-22	2	Nut-Wing
2	3256-23	2	Washer-Plain
3	100-6434	1	Rod-Hold Down, Battery
4	3230-1	2	Bolt-CARR
5	104-8162	1	Battery
6	104-8300	2	Nut-HF, NI
7	83-0020	1	Switch-Ignition
7:1	218-461	1	Nut-HH
7:2	3254-5	1	Washer-Lock
8	63-8360	2	Key-Ignition
9	104-7427	1	Inductive Hourmeter ASM
9:1	104-4234	1	Clip-Mounting
10	106-8920	1	Switch-Paddle, On-None-On
11	106-2027	1	Switch-Intermittent
12	105-1158	1	Guard-Switch
13	3234-13	3	Screw-HHF
14	106-8823	1	Harness-Electric, Main

Ref.	Part Number	Qty.	Description
14:6	218-578	2	Fuse-Blade, 10 Amp ●
14:7	94-6710	1	Fuse-2 Amp ●
14:9	109101	1	Fuse-Blade, 20 Amp ●
14:10	100-4918	4	Diode ●
15	3250-27	2	Screw-PPH
16	3296-2	3	Nut-Lock, NI
17	32128-33	6	Nut-HF
18	107-7530-01	1	Bracket-Relay
19	99-7430	4	Relay-Mini
20	106948	1	Tray-Battery
21	106-8831	1	Module-Control, Aerator
21:5	106-8835	1	Decal-Module, Aerator
21:6		7	Screw-PPH ■
21:7		2	Screw-PPH ■
21:8		2	Seal-Dust ■
22	100-6435	2	Post-Battery
23	321-8	3	Screw-HH
24	32105-1	1	Screw-SHH

● Not illustrated

■ Not serviced separately

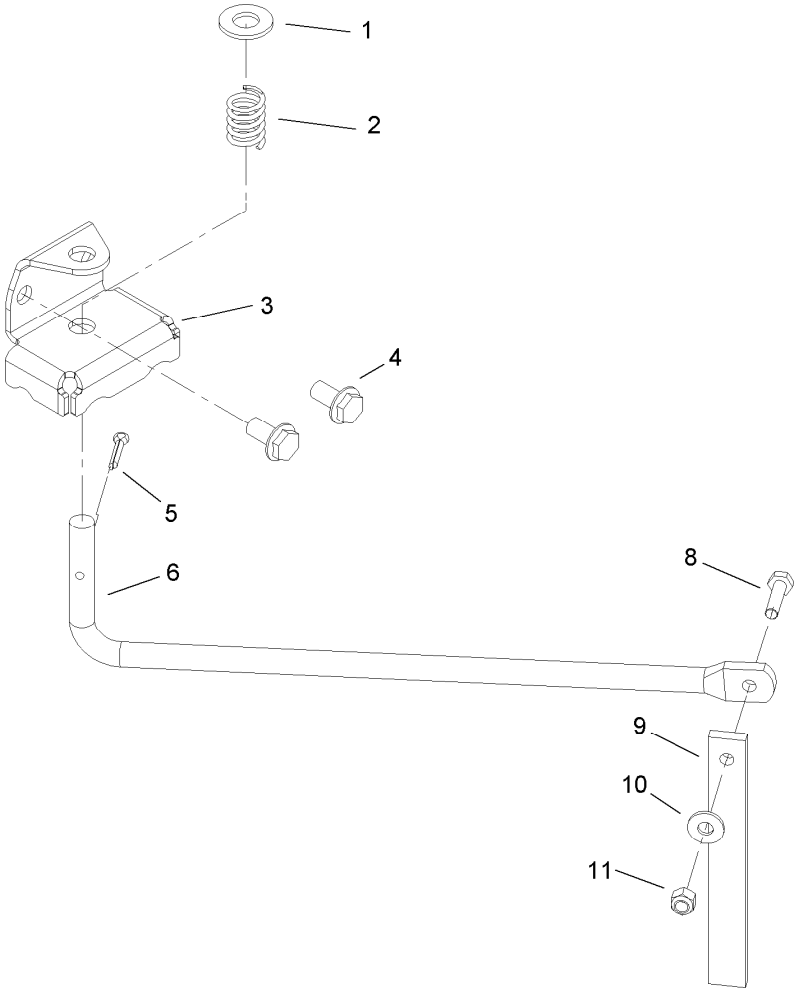

Line Marker Assembly

Ref.	*Part Number*	*Qty.*	*Description*
1	3256-26	2	Washer-Flat
2	20-6110	2	Spring-Compression
3	105-1178-01	2	Bracket-Marker
4	3234-1	4	Screw-HHF
5	3272-31	2	Pin-Cotter
6	105-1179	2	Rod-Marker
8	321-6	2	Screw-HH
9	59-9460	2	Guide
10	3256-2	2	Washer-Flat
11	3296-42	2	Nut-Lock, NI

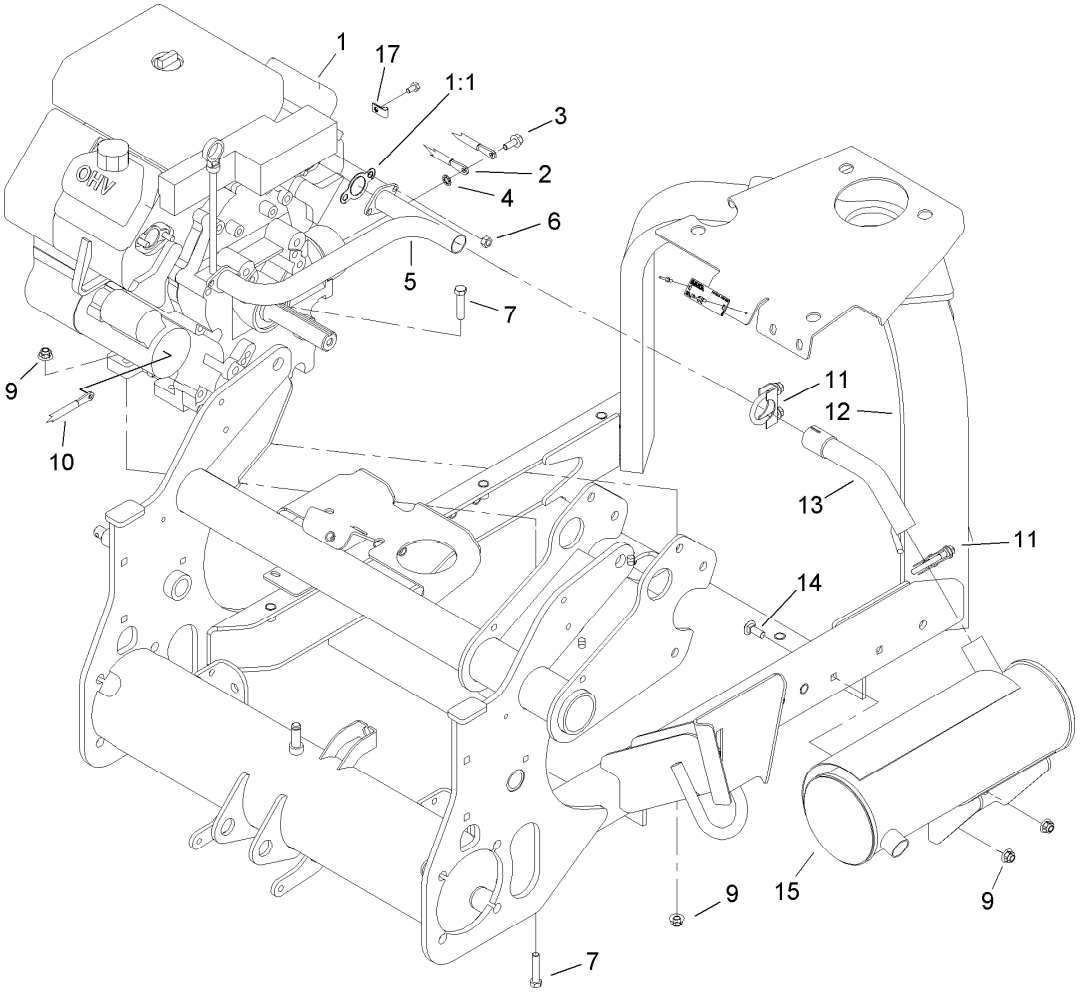

Engine and Muffler Assembly

Ref.	Part Number	Qty.	Description
1	106-8801	1	Engine-Kohler
1:1		2	Gasket-Exhaust ●
2	106-8946	1	Cable-Battery, Negative
3	33104-020	1	Screw-HHF
4	3254-2	1	Washer-Lock, Internal
5	106-8858	1	Manifold-Exhaust
6	33014-00	4	Nut-Hex
7	323-9	4	Screw-HH
9	104-8301	6	Nut-HF, NI
10	106-8945	1	Cable-Battery, Positive
11	104-4090	2	Clamp-Muffler
12	106-8910	1	Front Frame ASM
13	106-8857	1	Elbow-Exhaust
14	3231-2	2	Bolt-CARR
15	106-8859	1	Muffler-Exhaust
17	2412-72	1	Clip-Closed, Insulated

● Not serviced separately

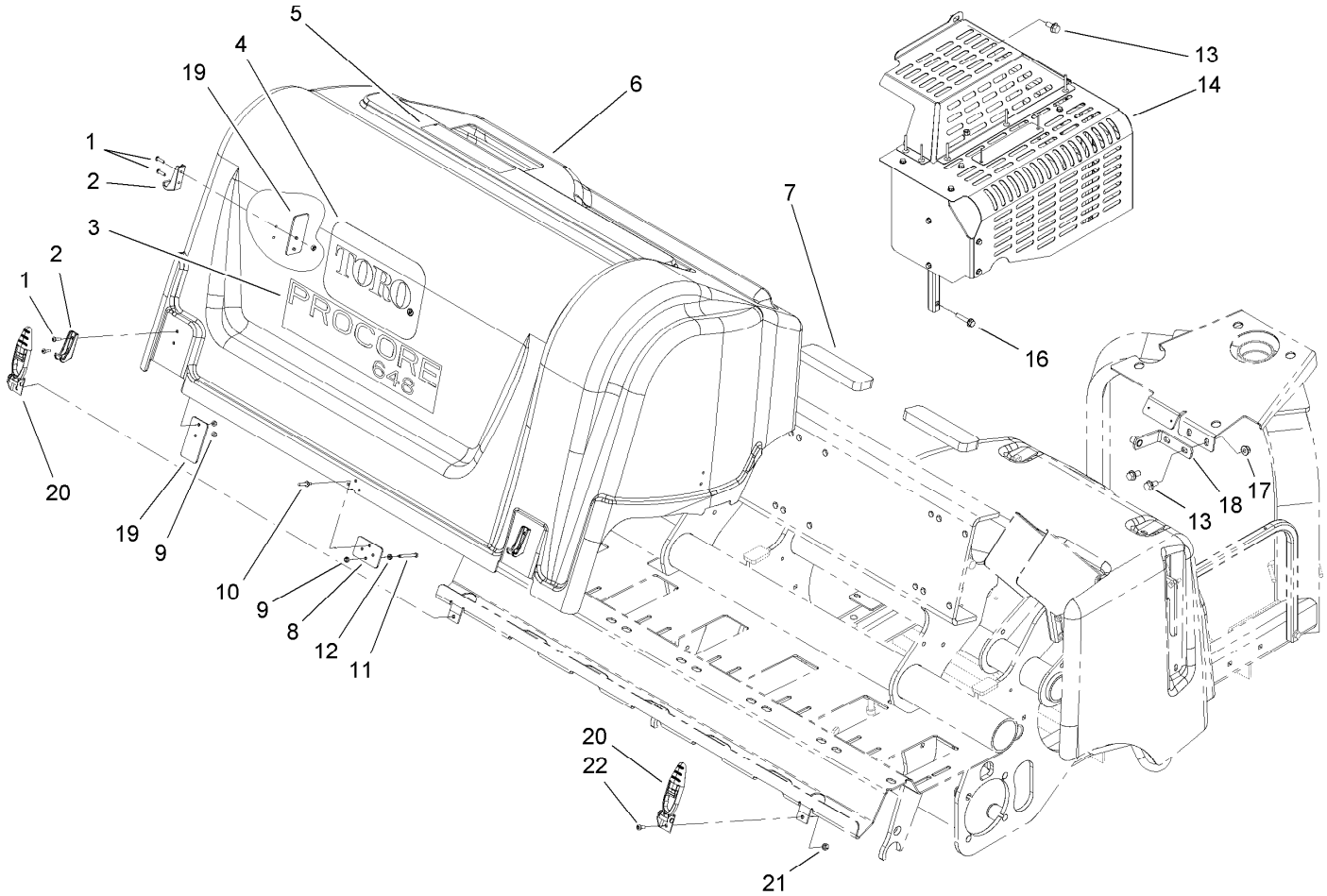

Rear Hood and Muffler Shield Assembly

Ref.	*Part Number*	*Qty.*	*Description*
1	104-2408	8	Screw-HSBH
2	103-2897	4	Latch-Catch
3	106-8852	1	Decal
4	67-7310	1	Decal
5	106-8856	1	Decal-Depth, Tine
6	110-1494	1	Hood-Rear
7	107-7507	3	Pad-Foam
8	107-7508	1	Plate-Backup
9	3296-2	9	Nut-Lock, NI
10	3269-22	3	Rivet-Pop
11	32105-20	1	Screw-HH
12	3217-26	1	Nut-Hex
13	3234-1	3	Screw-HHF
14	107-7546	1	Shield ASM
16	3234-18	2	Screw-HHF
17	104-8301	2	Nut-HF, NI
18	107-7545	1	Bracket ASM
19	110-1499	4	Plate-Reinforcement
20	103-2898	4	Latch-Rubber
21	3296-42	4	Nut-Lock, NI
22	3274-31	4	Screw-HSBH

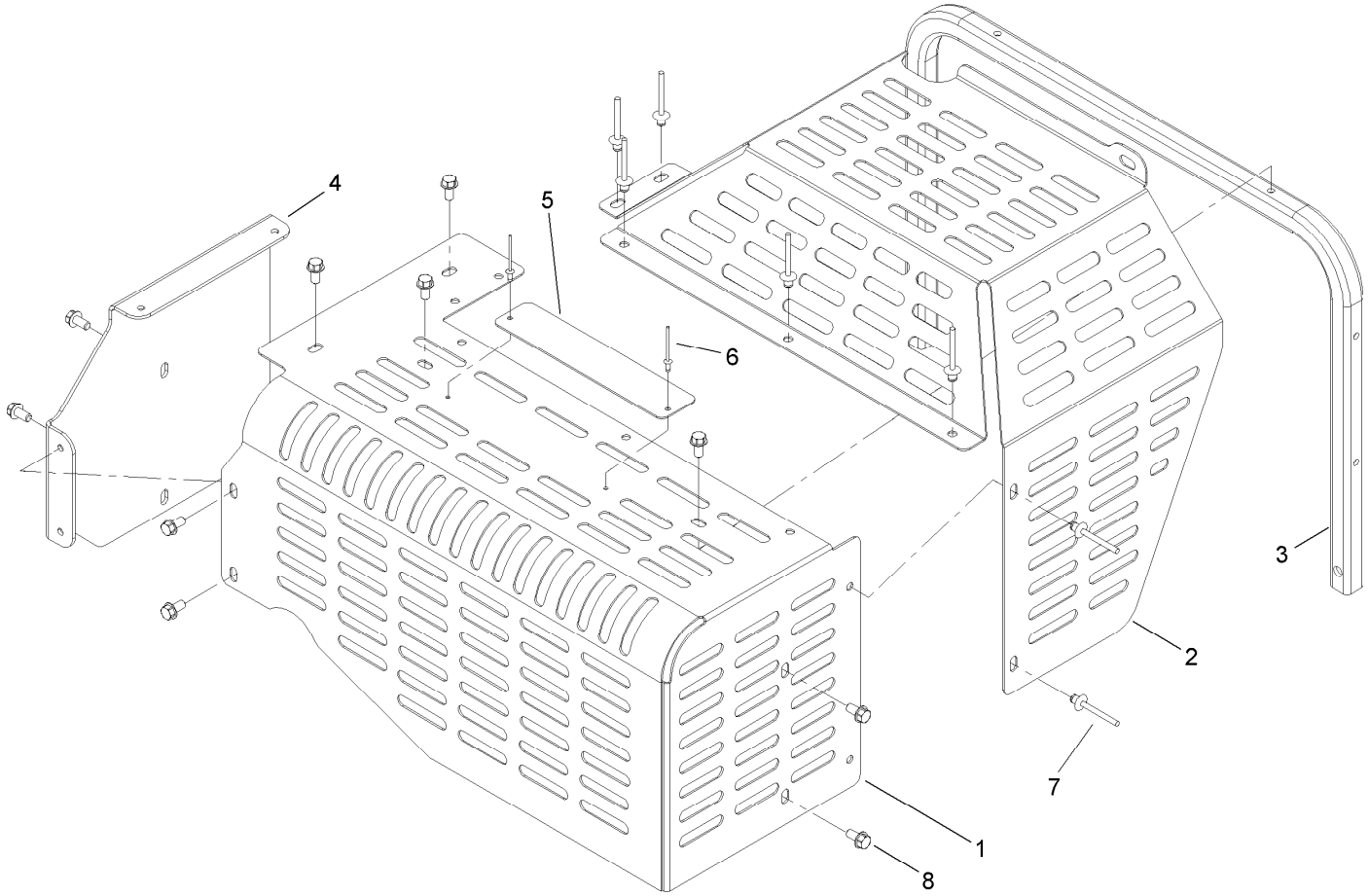

Shield Assembly No. 107-7546

Ref.	*Part Number*	*Qty.*	*Description*
1	106-8903-01	1	Shield-Muffler
2	106-8904-03	1	Shield-Clutch
3	106-8848-01	1	Tube-Shield, Muffler
4	106-8906-01	1	Bracket-Shield, Muffler
5	107-7547	1	Plate-Warning
6	3269-32	2	Rivet-Pop
7	93-8744	7	Rivet-Blind
8	32144-4	10	Screw-HWH

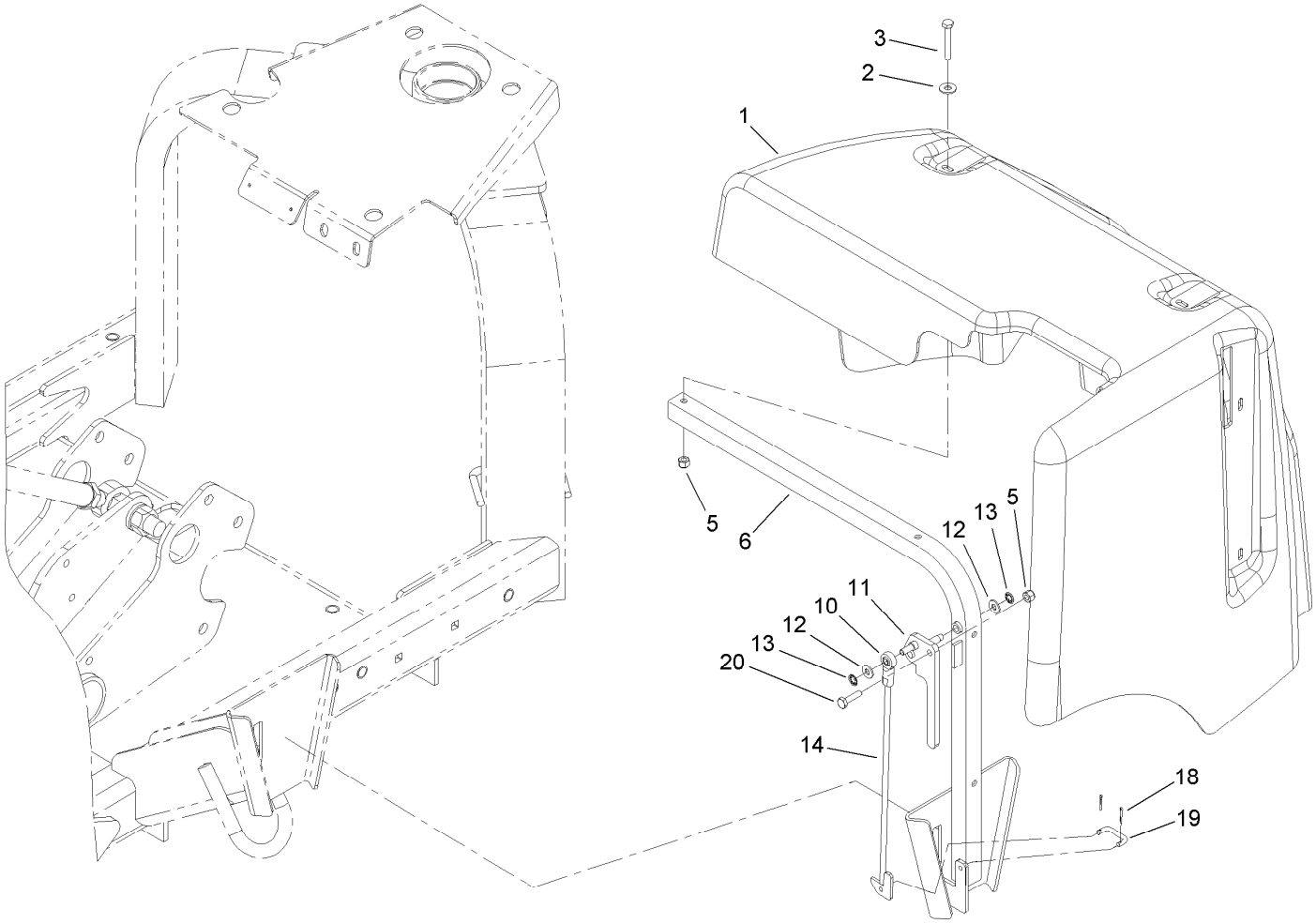

Jackshaft Hood Assembly

Ref.	*Part Number*	*Qty.*	*Description*
1	106-8901	1	Hood-Front
2	100-2400	4	Washer
3	321-10	4	Screw-HH
5	3296-42	5	Nut-Lock, NI
6	106-8846-03	1	Frame-Hood
10	2411-41	1	Rod End-Ball Joint
11	106-8924-03	1	Hood Latch Lever ASM
12	3256-22	2	Washer-Flat
13	104-8310	2	Ring-Retaining
14	106-8928	1	Hook ASM
18	3272-1	2	Pin-Cotter
19	69-9140	1	Link-Lever, Valve
20	321-6	1	Screw-HH

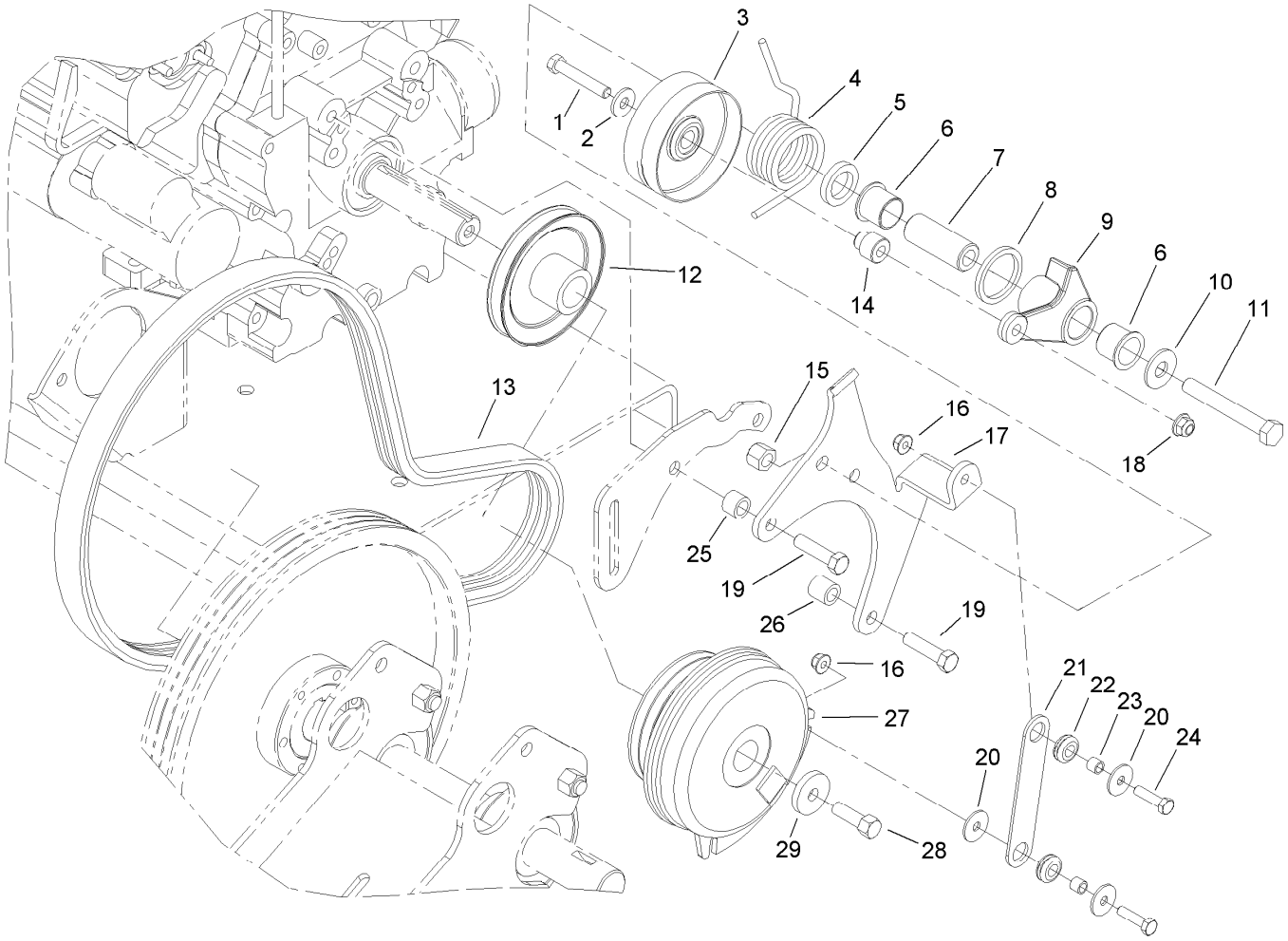

Primary Belt Drive Assembly

Ref.	Part Number	Qty.	Description
1	323-11	1	Screw-HH
2	80-6990	1	Washer-Hardened
3	99-3621	1	Pulley-Idler
4	100-4844	1	Spring-Torsion
5	99-3625	1	Spacer-Arm, Idler
6	99-3631	2	Bushing-Flange
7	105-0945	1	Sleeve-Pivot
8	72-4170	1	Washer
9	99-3623-03	1	Arm-Idler
10	3256-6	1	Washer-Flat
11	325-15	1	Screw-HH
12	107-3379	1	Pulley
13	105-0989	1	Belt-3V
14	99-3622	1	Spacer-Idler
15	3296-23	1	Nut-Lock, NI

Ref.	Part Number	Qty.	Description
16	104-8300	2	Nut-HF, NI
17	105-0986-03	1	Bracket-Mounting, Idler
18	104-8301	1	Nut-HF, NI
19	324-7	3	Screw-HH
20	3256-82	3	Washer-Flat
21	107-3382	1	Strap-Clutch
22	1-633630	2	Grommet
23	1-633545	2	Spacer
24	322-6	2	Screw-HH
25	68-5440	2	Spacer
26	105-0985	1	Spacer-Support, Idler
27	108-2126	1	Clutch-Electric
28	26-0671	1	Screw-HH
29	1-543610	1	Washer-Clutch

● Not illustrated

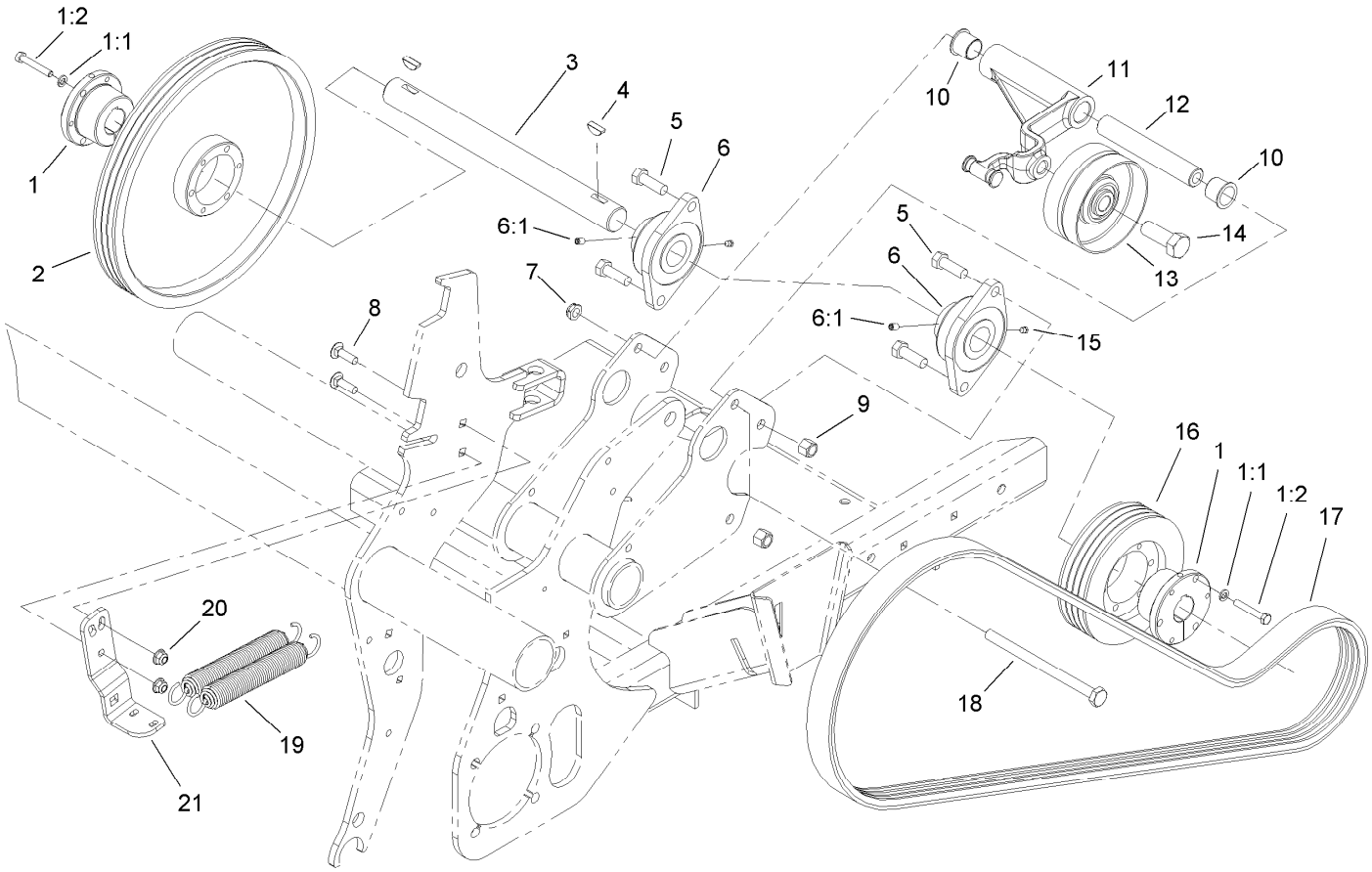

Secondary Belt Drive Assembly

Ref.	*Part Number*	*Qty.*	*Description*
1	59-3790	2	Bushing-Lock, Taper
1:1	3253-4	3	Washer-Lock
1:2	322-10	3	Screw-HH
2	105-0977	1	Pulley-3V
3	105-0975	1	Jackshaft
4	3257-42	2	Key-Woodruff
5	325-7	4	Screw-HH
6	105-0962	2	Bearing-Mount, Flange
6:1	3246-17	1	Setscrew-HSH
7	3296-45	1	Nut-Hex
8	3231-25	2	Bolt-CARR
9	3296-23	4	Nut-Lock, NI
10	99-3631	2	Bushing-Flange
11	105-1132-03	1	Arm-Idler
12	105-1172	1	Tube-Pivot, Idler
13	100-7631	1	Pulley-Idler
14	328-24	1	Screw-HH
15	302-59	2	Plug-Threaded
16	105-0976	1	Pulley-3V
17	105-0991	1	Belt-Banded, 4 Groove
18	325-36	1	Screw-HH
19	106-8933	2	Spring-Extension
20	104-8301	2	Nut-HF, NI
21	105-1118-03	1	Arm-Spring, Idler

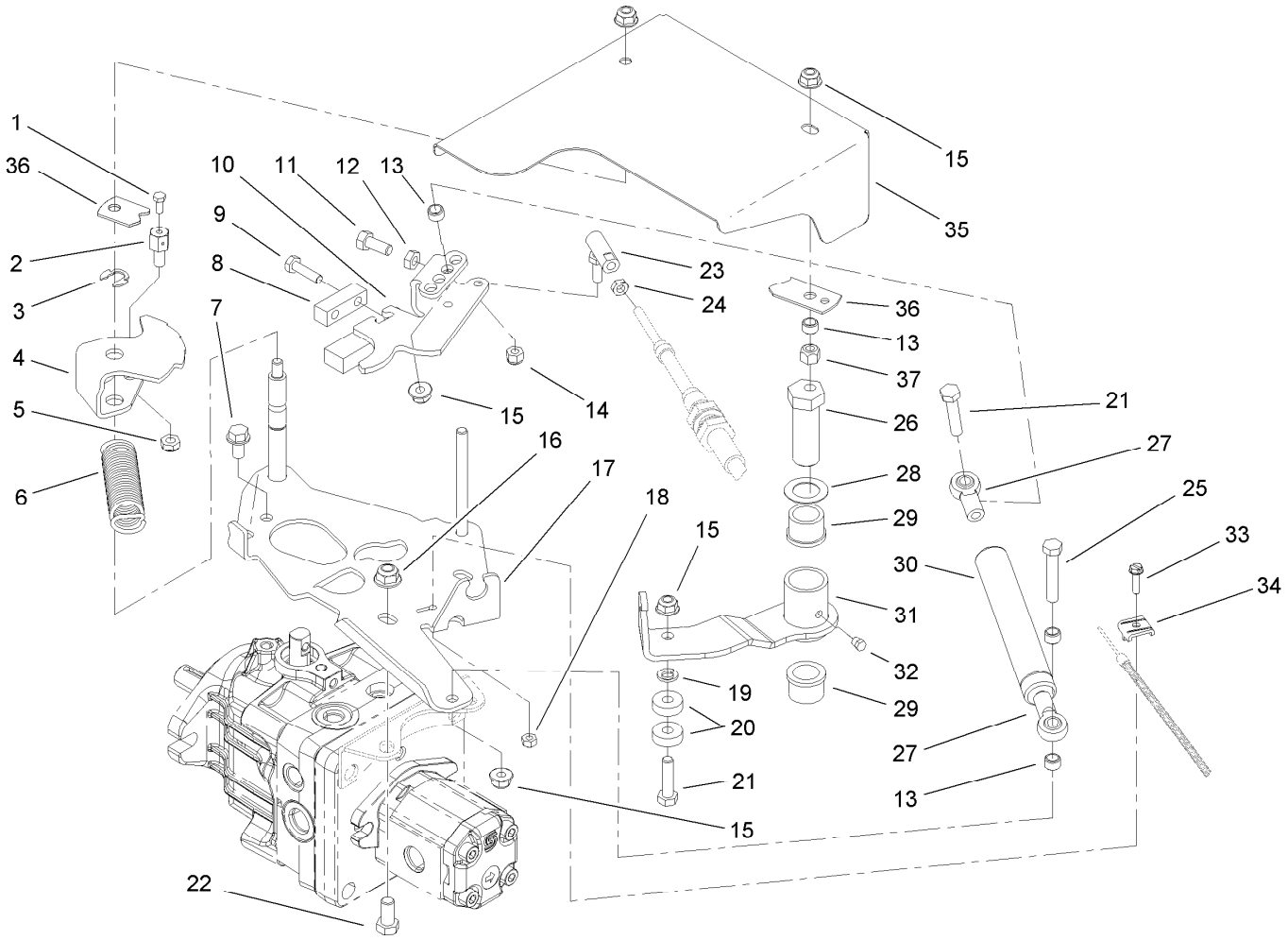

Hydrostat Control Assembly

Ref.	Part Number	Qty.	Description
1	25-8640	1	Screw-HH
2	98-9311	1	Swivel-Throttle
3	32151-68	1	Ring-Retaining
4	105-1129-01	1	Pivot-Selector, Speed
5	3296-20	1	Nut-Lock, NI
6	707451	1	Spring-Extension
7	32144-14	1	Screw-HWHTF
8	105-1109	1	Clamp-Trunnion
9	321-6	2	Screw-HH
10	105-1125-01	1	Lever-Pump
11	3210-3	1	Screw-HH
12	3220-2	1	Nut-Jam
13	92-3133	4	Spacer-Lever, Traction
14	3296-3	1	Nut-Lock
15	104-8300	5	Nut-HF, NI
16	104-8301	2	Nut-HF, NI
17	105-1112-01	1	Control Bracket ASM
18	3296-2	1	Nut-Lock, NI
19	3253-4	1	Washer-Lock

Ref.	Part Number	Qty.	Description
20	251-259	2	Bearing-Ball
21	322-7	2	Screw-HH
22	323-4	2	Screw-HH
23	2411-34	1	Joint-Ball
24	3220-1	1	Nut-Jam
25	322-9	1	Screw-HH
26	76-8640	1	Stud-Traction
27	104-8331	2	End-Rod, Spherical
28	3-6498	1	Washer-Thrust
29	256-113	2	Bushing-Flange
30	105-3249	1	Damper
31	105-1060-01	1	Lever-Neutral
32	302-59	1	Plug-Threaded
33	32105-13	1	Screw-HWH
34	81-1690	1	Clamp-Cable
35	107-7578-01	1	Shield-Hydrostat
36	108-6836	1	Strap-Traction
37	3296-29	1	Nut-Lock, NI

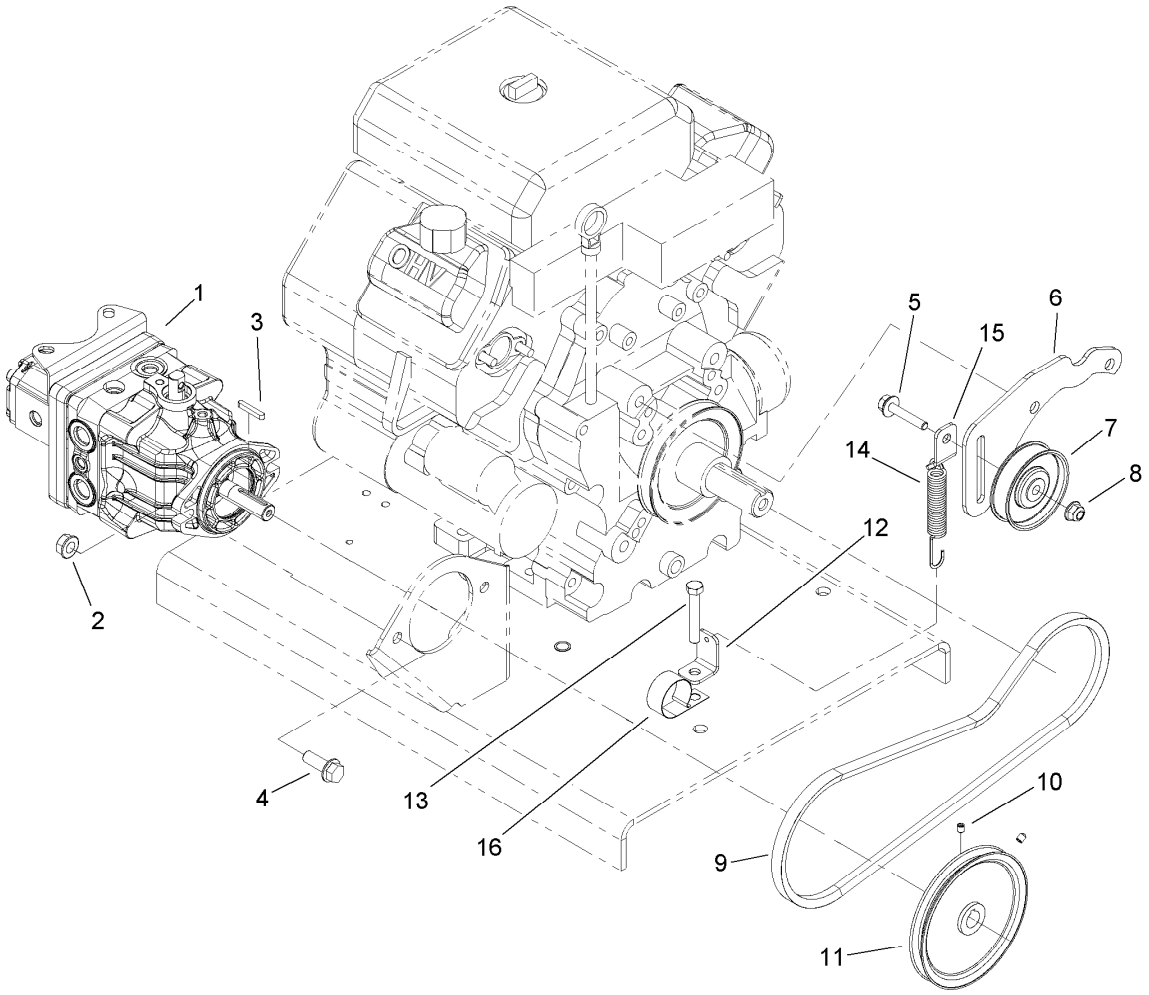

Hydrostat Pump Assembly

Ref.	*Part Number*	*Qty.*	*Description*
1	108-6800	1	Hydrostat And Pump ASM
2	32128-37	2	Nut-HF
3	103-2739	1	Key
4	3234-15	2	Screw-HHF
5	3234-19	1	Screw-HHF
6	105-1085-03	1	Support-Idler
7	112426	1	Pulley-Idler
8	104-8301	1	Nut-HF, NI
9	107-7513	1	V-Belt
10	3245-7	2	Screw-Set
11	105-0988	1	Pulley-Drive
12	107-7583	1	Bracket-L
13	104-3396	1	Screw-HH
14	106-4502	1	Spring-Scraper
15	107-7588	1	Bracket-Spring
16	2412-150	1	Clip-J

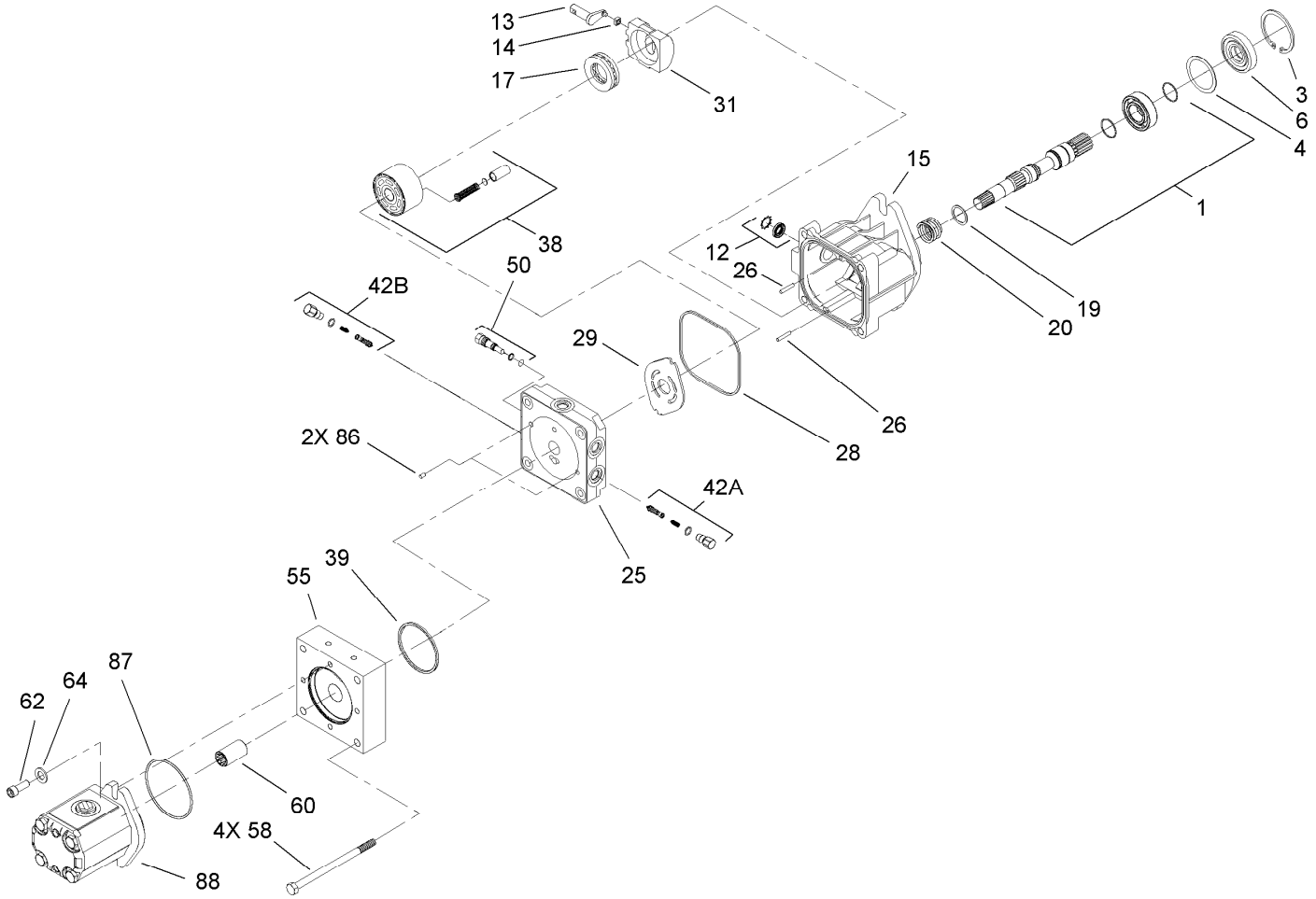

Hydrostat and Pump Assembly No. 108-6800

Ref.	Part Number	Qty.	Description
1		1	Pump Shaft Kit ■
3		1	Ring-Retaining ■
4		1	Spacer ■
6		1	Seal-Lip ■
12		1	Trunnion Seal Kit ■
13		1	Arm-Trunnion ■
14		1	Slot-Guide ■
15		1	Housing Kit ■
17		1	Thrust Bearing ASM ■
19		1	Washer-Thrust ■
20		1	Spring-Block ■
25		1	Endcap Kit ■
26		2	Pin ■
28		1	Seal-Dust ■
29	108-6801	1	Plate-Valve

Ref.	Part Number	Qty.	Description
31		1	Swashplate-Variable ■
38	108-2112	1	Cylinder Block Kit
39		1	Ring ■
42	108-2109	2	Shock Valve Kit
50	106-8759	1	Bypass Valve Kit
55		1	Plate-Adapter ■
58		4	Screw-Hex, Flange Head ■
60		1	Coupling ■
62		2	Capscrew-Sh ■
64		2	Washer ■
85	108-2110	1	Overhaul Seal Kit ●
86		2	Pin ■
87		1	Seal-Dust ■
88	108-2113	1	Pump-HYD
88:1	106-6362	1	Seal Kit ●

● Not illustrated

■ Not serviced separately

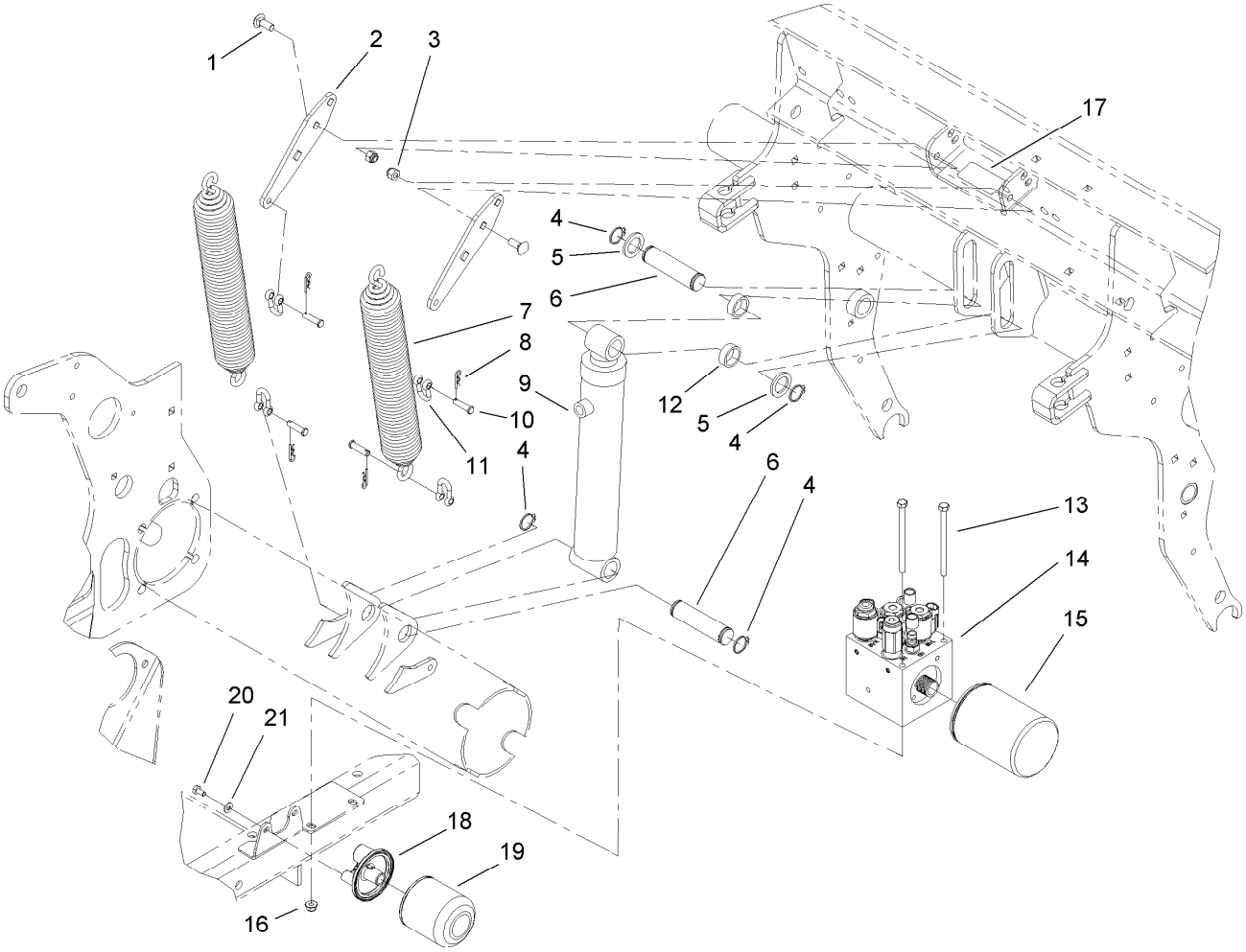

Lift System Assembly

Ref.	Part Number	Qty.	Description
1	3231-2	4	Bolt-CARR
2	105-1190-01	2	Plate-Tension, Spring
3	104-8301	4	Nut-HF, NI
4	32151-36	4	Ring-Retaining
5	256-115	2	Washer-Thrust
6	105-1031	2	Pin-Cylinder
7	105-1156-03	2	Spring-Extention
8	3290-307	4	Pin-Cotter
9	105-1030	1	HYD Cylinder ASM
10	283-6	4	Pin-Clevis
11	282-4	4	Shackle
12	88-7530	2	Spacer
13	322-38	2	Screw-HH
14	106-8802	1	Manifold-Control
15	107-9531	1	Filter-Oil, HYD
16	104-8300	2	Nut-HF, NI
17	93-6696	1	Decal-Warning
18	103-2888	1	Head-Filter
19	1-633750	1	Filter-Oil, HYD
20	321-2	2	Screw-HH
21	3256-22	2	Washer-Flat

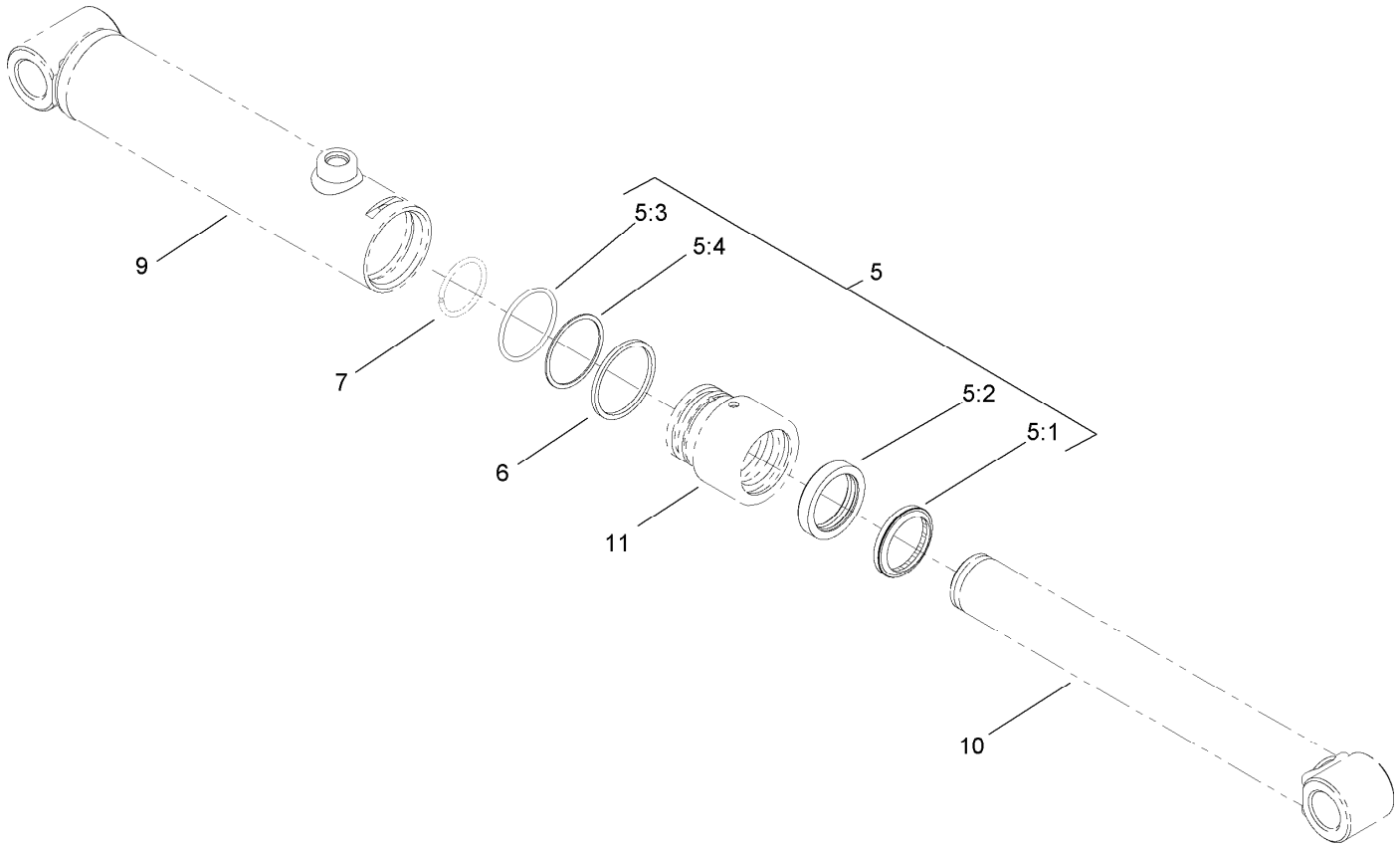

Hydraulic Cylinder Assembly No. 105-1030

Ref.	*Part Number*	*Qty.*	*Description*
5	108-6795	1	Cylinder Seal Kit
5:1		1	Wiper ●
5:2		1	Seal ●
5:3		1	O-Ring ●
5:4		1	Back-Up ●
6	108-6797	1	Ring-Retainging
7		1	Ring-Retaining ●
9		1	Tube ASM ●
10		1	Rod ASM ●
11		1	Head ●

● Not serviced separately

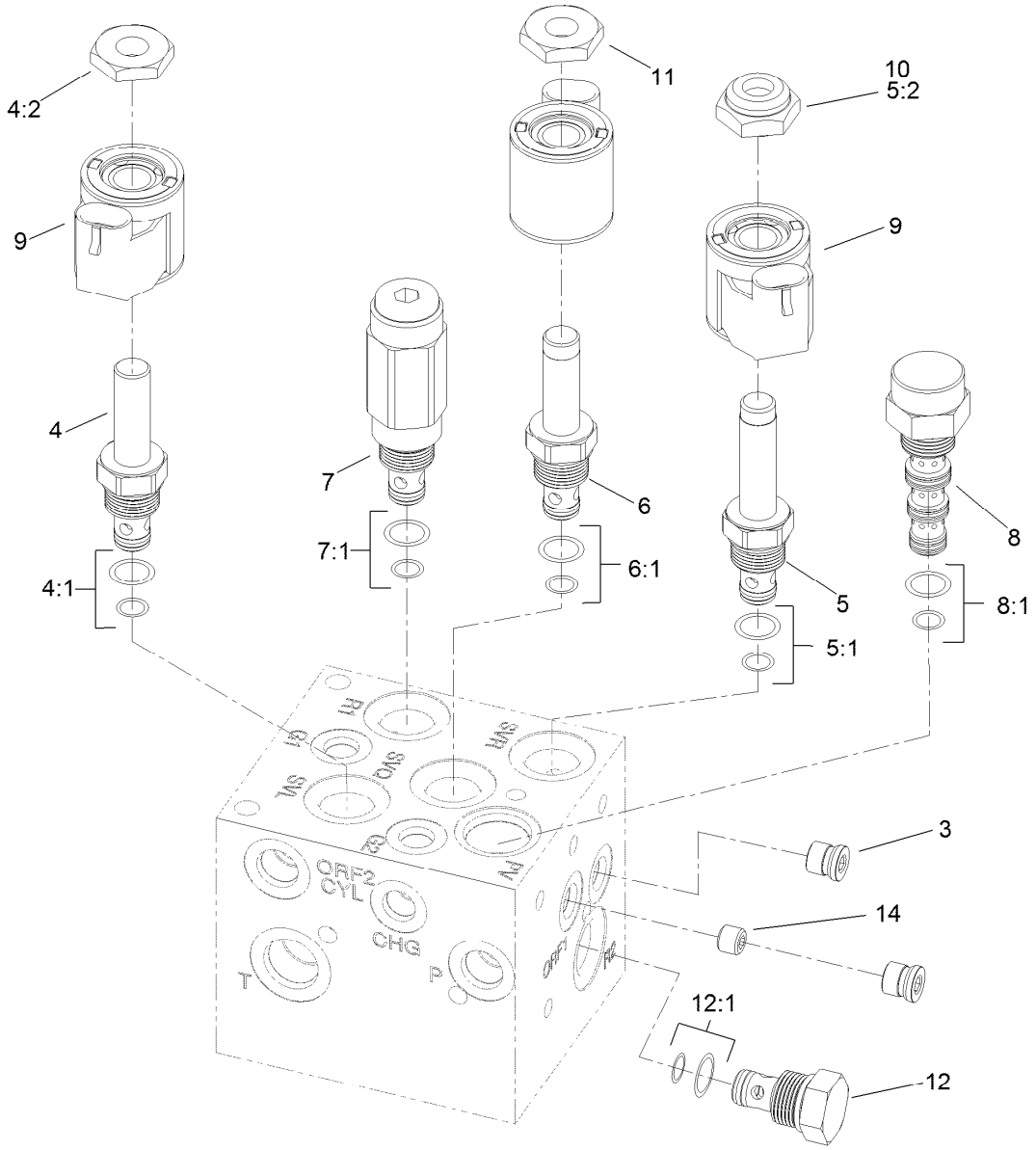

Control Manifold Assembly No. 106-8802

Ref.	Part Number	Qty.	Description
3	106-1025	2	Plug-HYD
4	112-9206	1	Solenoid Valve ASM
4:1	105-9156	1	Seal Kit
4:2	110-2634	1	Nut-Coil
5	107-7517	1	Valve-Solenoid
5:1	105-9156	1	Seal Kit
5:2	107-7812	1	Nut-Solenoid
6	107-7518	1	Valve-Solenoid
6:1	107-7527	1	Seal Kit
7	107-7519	1	Valve-Relief, 900 PSI

Ref.	Part Number	Qty.	Description
7:1	105-9156	1	Seal Kit
8	107-7520	1	Compensator-Pressure (W/Screen)
8:1	110-8908	1	Spool Valve Seal Kit
9	110-0497	3	Coil-Solenoid
10	107-7522	1	Nut-E Coil
11	105-9332	2	Nut-E Coil
12	107-7524	1	Check Valve ASM
12:1	105-9156	1	Seal Kit
14	110-0495	1	Plug-Orifice (0.050 Inch)

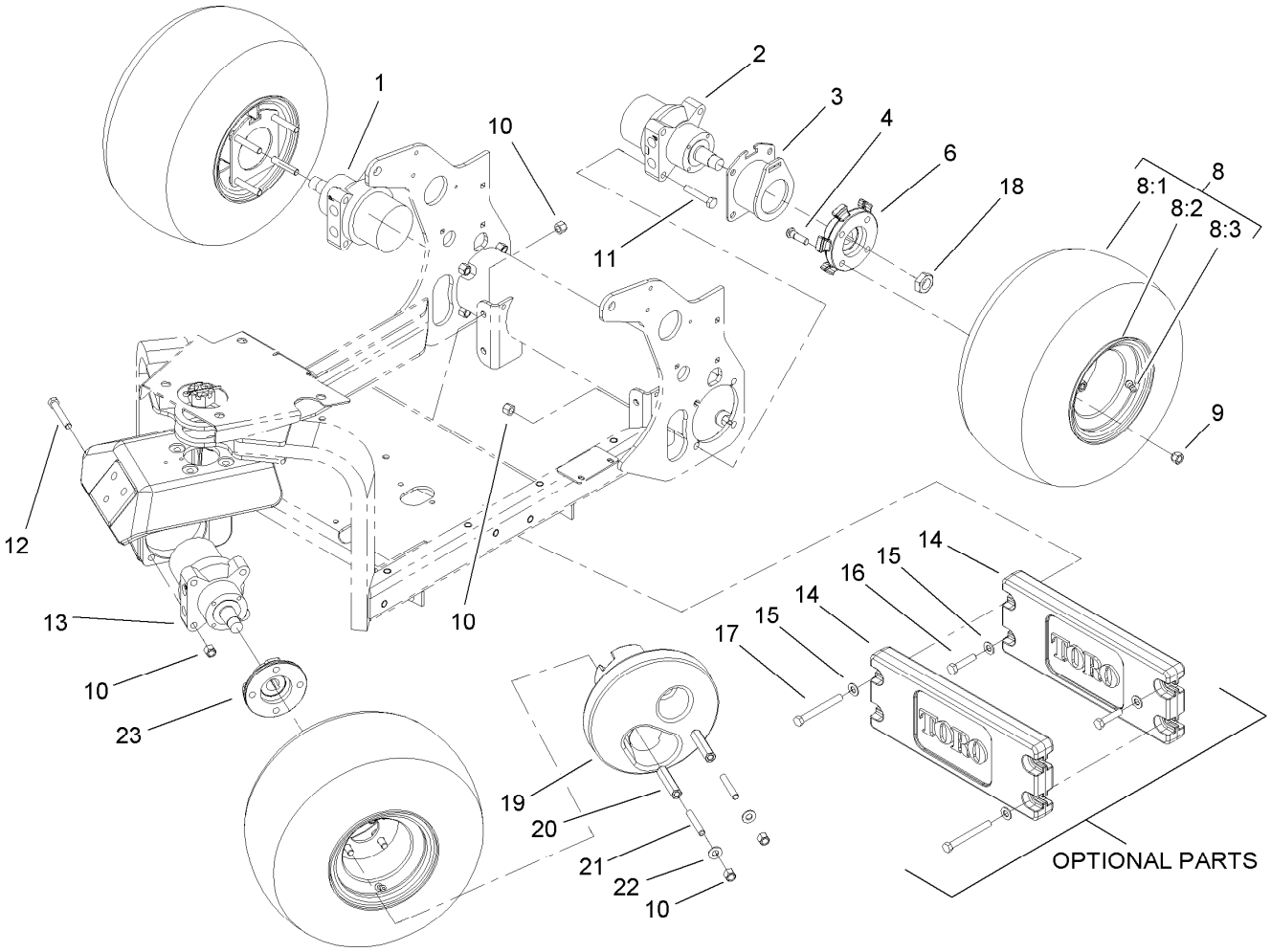

Wheel and Motor Assembly

Ref.	Part Number	Qty.	Description
1	106-8807	1	HYD Motor ASM
2	106-8806	1	HYD Motor ASM
3	106-8881-03	2	Support-Latch, Parking
4	85-6540	12	Stud-Drive
6	108-2101-03	2	Hub-Wheel, Spoked
8	99-8186	3	Wheel And Tire ASM
8:1	70-8500	1	Tire-Smooth, 2-Ply
8:2	94-6116	1	Wheel-Rear
8:3	232-27	1	Stem-Valve
9	242-50	10	Nut-Lug
10	3296-23	18	Nut-Lock, NI
11	325-11	8	Screw-HH
12	325-13	4	Screw-HH
13	106-8808	1	HYD Motor ASM
14	99-6166-01	2	Counterweight-Front
15	3256-26	4	Washer-Flat
16	325-9	2	Screw-HH
17	325-18	2	Screw-HH
18	26-3790	3	Nut-Lock
19	107-3396-03	1	Weight-Wheel
20	107-3399	2	Adapter-Weight, Wheel
21	105-1088	2	Stud
22	87-7270	2	Washer-Thrust
23	108-2103-03	1	Hub-Wheel

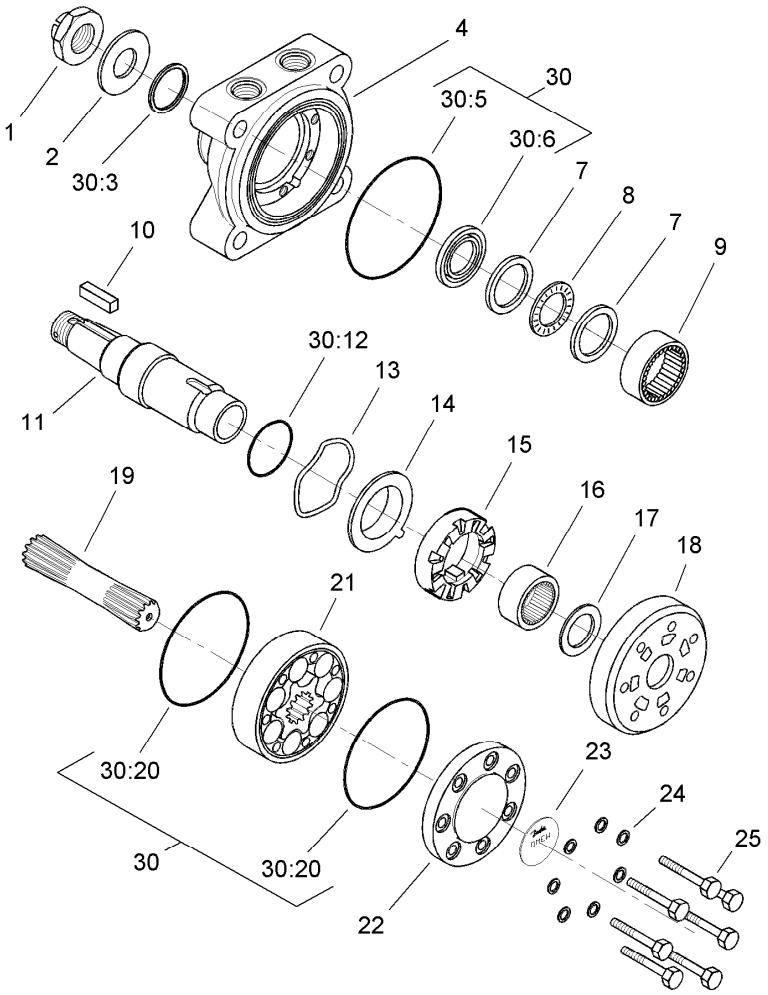

Hydraulic Motor Assembly No. 106-8806, 106-8807 and 106-8808

Ref.	Part Number	Qty.	Description
1		1	Nut-Castellated ●
2		1	Washer ●
4		1	Housing ●
7		2	Race-Bearing ●
8		1	Bearing-Needle, Axial ●
9		1	Bearing-Needle, Radial ●
10		1	Key-Parallel ●
11		1	Shaft-Tapered ●
13		1	Washer-Spring ●
14		1	Plate-Balance ●
15		1	Disc-Valve ●
16		1	Bearing-Needle, Radial ●
17		1	Race-Bearing ●

Ref.	Part Number	Qty.	Description
18		1	Plate-Distributor ●
19		1	Shaft-Cardan ●
21		1	Gearwheel Set ●
22		1	Cover-End ●
23		1	Plate-Name ●
24		7	Washer ●
25		7	Washer ●
30	108-6796	1	Seal Kit
30:3		1	Ring-Seal, Dust ●
30:5		1	O-Ring ●
30:6		1	Seal-Shaft ●
30:12		1	O-Ring ●
30:20		2	O-Ring ●

● Not serviced separately

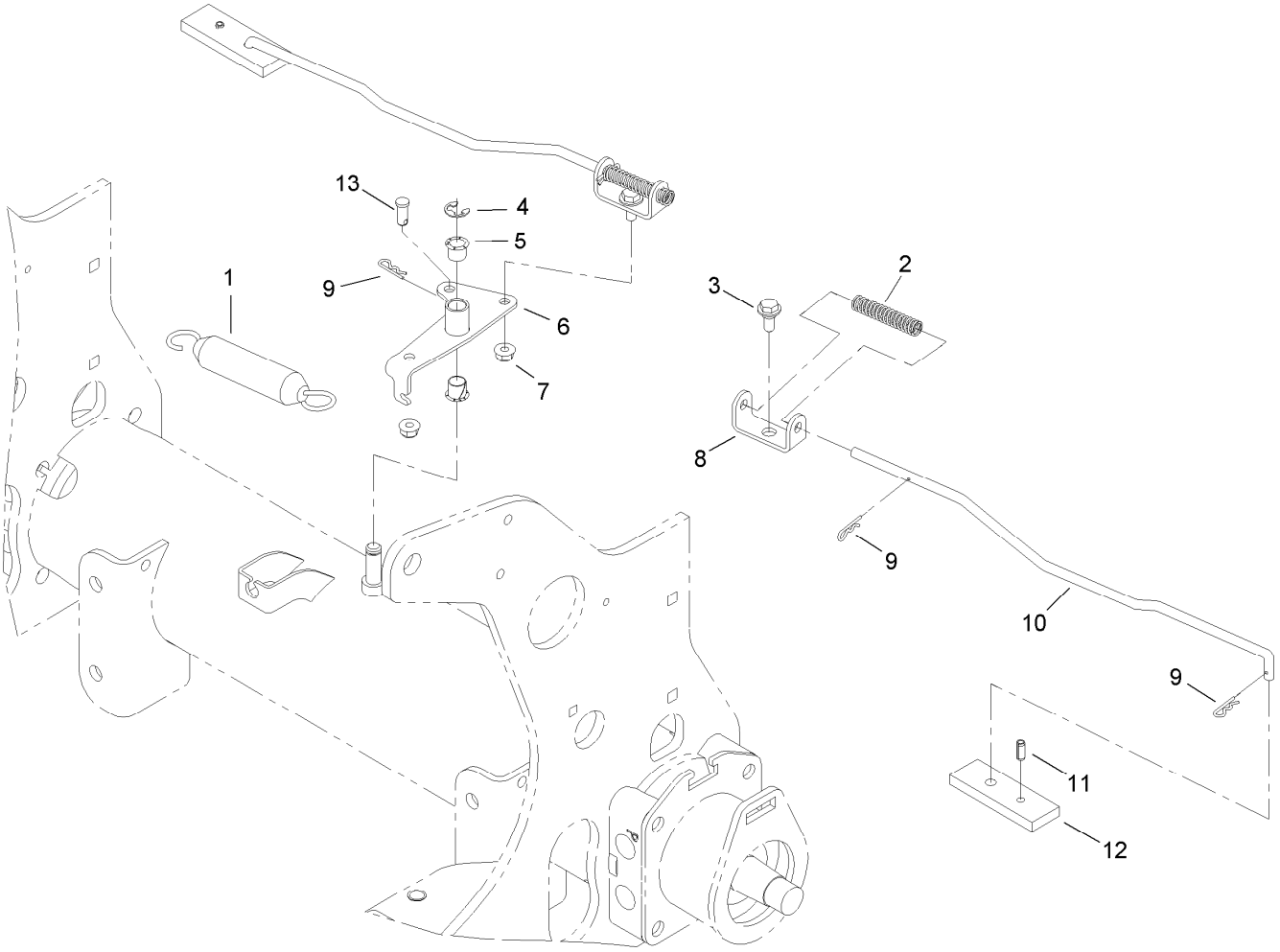

Brake Latch Assembly

Ref.	*Part Number*	*Qty.*	*Description*
1	66-4270	1	Spring-Extension
2	107-3376	2	Spring-Compression
3	19-1470	2	Screw-Shoulder
4	32120-47	2	Ring-Retaining, External
5	256-257	2	Bushing-Nyliner
6	106-8887-03	1	Pivot-Latch, Parking
7	104-8300	2	Nut-HF, NI
8	106-8890-03	2	Clevis-Latch, Parking
9	3290-307	5	Pin-Cotter
10	106-8886	2	Link-Latch, Parking
11	32121-134	2	Pin-Roll
12	106-8885-03	2	Bar-Latch, Parking
13	283-62	1	Pin-Clevis

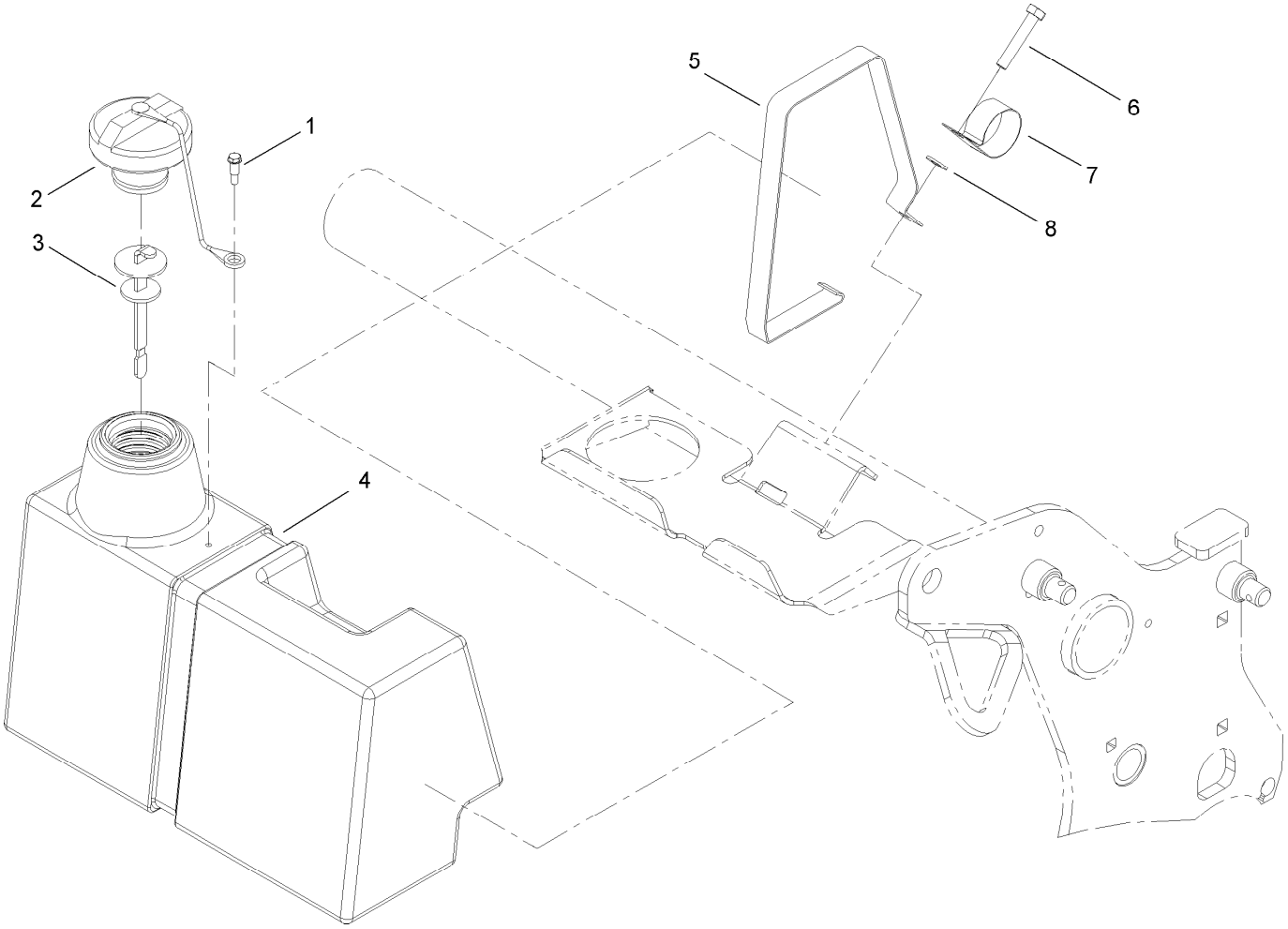

Hydraulic Tank Assembly

Ref.	Part Number	Qty.	Description
1	57-5420	1	Screw-Shoulder
2	93-7160	1	Cap-Oil, HYD
3	106-8811	1	Dipstick ASM
4	106-8877	1	Reservoir-Oil, HYD
5	94-4642-03	1	Strap-Tank, HYD
6	322-41	1	Screw-HH
7	2412-150	1	Clip-J
8	3256-23	1	Washer-Plain

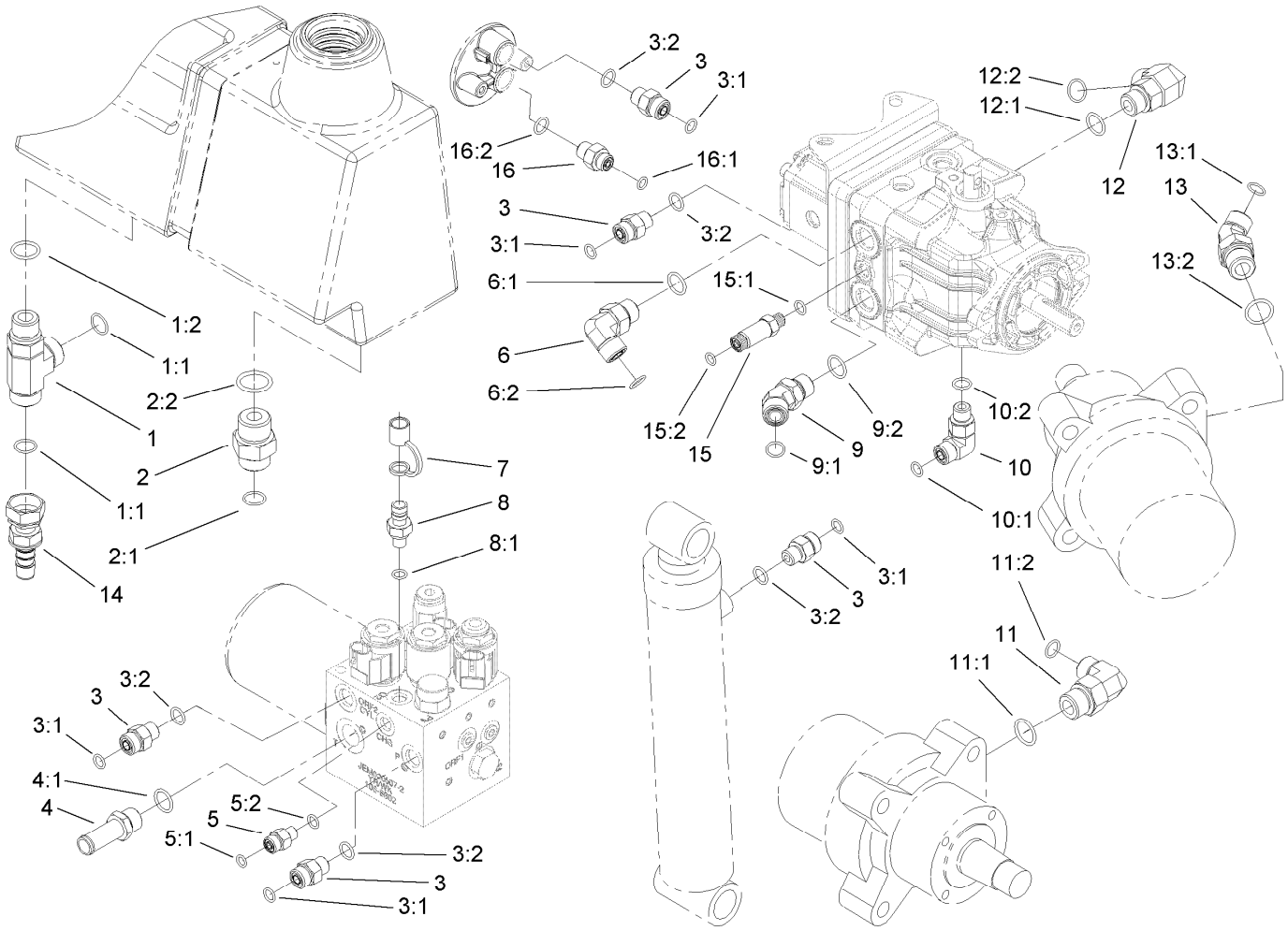

Hydraulic Fitting Assembly

Ref.	Part Number	Qty.	Description
1	340-22	1	Fitting-Tee
1:1	237-65	2	O-Ring
1:2	237-80	1	O-Ring
2	340-8	1	Fitting-Straight
2:1	237-65	1	O-Ring
2:2	237-81	1	O-Ring
3	340-2	5	Fitting-Straight
3:1	237-22	1	O-Ring
3:2	237-42	1	O-Ring
4	107-7569	1	Fitting-STR
4:1	237-79	1	O-Ring
5	340-88	1	Fitting-Straight
5:1	237-22	1	O-Ring
5:2	237-78	1	O-Ring
6	340-98	1	Fitting-Elbow, 90 DEG
6:1	237-79	1	O-Ring
6:2	237-30	1	O-Ring
7	354-79	2	Cap-Dust
8	354-77	2	Fitting-Quick
8:1	237-78	1	O-Ring
9	340-101	1	Fitting-HYD, 45 DEG

Ref.	Part Number	Qty.	Description
9:1	237-30	1	O-Ring
9:2	237-79	1	O-Ring
10	340-77	1	Fitting-Elbow, 90 DEG
10:1	237-22	1	O-Ring
10:2	237-42	1	O-Ring
11	340-105	4	Fitting-Elbow, 90 DEG
11:1	237-80	1	O-Ring
11:2	237-30	1	O-Ring
12	340-153	1	Fitting-Elbow, 90 DEG
12:1	237-79	1	O-Ring
12:2	237-151	1	O-Ring
13	340-89	2	Fitting-HYD, 45 DEG
13:1	237-30	1	O-Ring
13:2	237-80	1	O-Ring
14	107-7568	1	Fitting-HYD, Barbed
15	94-1403	1	Adapter-HYD
15:1	237-78	1	O-Ring
15:2	237-21	1	O-Ring
16	340-1	1	Fitting-Straight
16:1	237-21	1	O-Ring
16:2	237-42	1	O-Ring

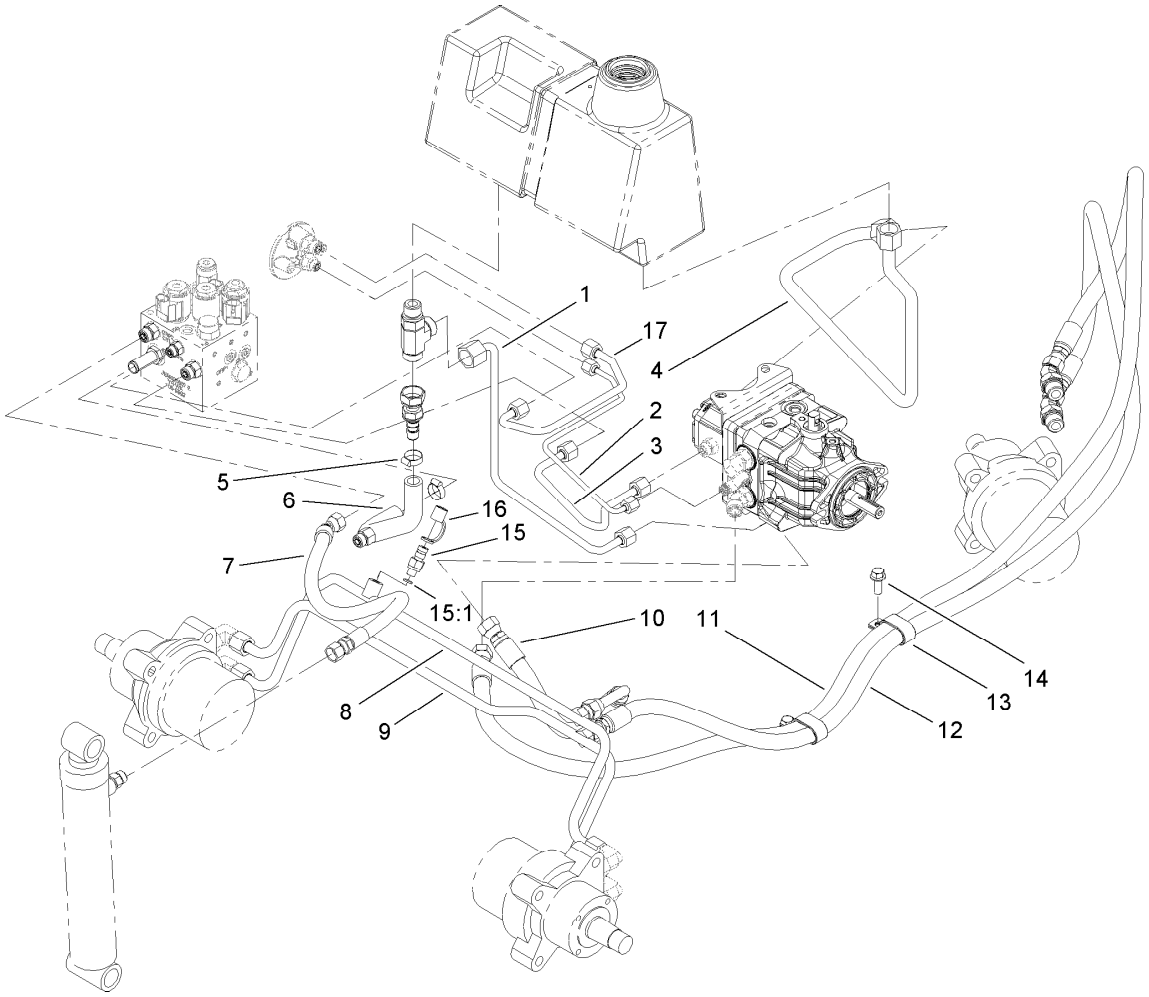

Hydraulic Line and Hose Assembly

Ref.	*Part Number*	*Qty.*	*Description*
1	107-3388	1	Tube ASM
2	108-6812	1	Tube ASM
3	112-6539	1	Tube-HYD
4	107-3387	1	Tube ASM
5	2412-141	2	Clamp-Drive, Worm
6	107-7565	1	Hose-Formed
7	105-3919	1	Hose-HYD
8	106-8819	1	Tube ASM
8:1	237-30	1	O-Ring ●
9	106-8818	1	Tube ASM
9:1	237-30	1	O-Ring ●
10	84-0890	1	Hose ASM
11	106-8822	1	Hose ASM
12	106-8821	1	Hose ASM
13	106-8829	2	R Clamp-Double
14	3234-11	2	Screw-HHF
15	354-77	1	Fitting-Quick
15:1	237-78	1	O-Ring
16	354-79	1	Cap-Dust
17	108-6811	1	Tube ASM

● Not illustrated

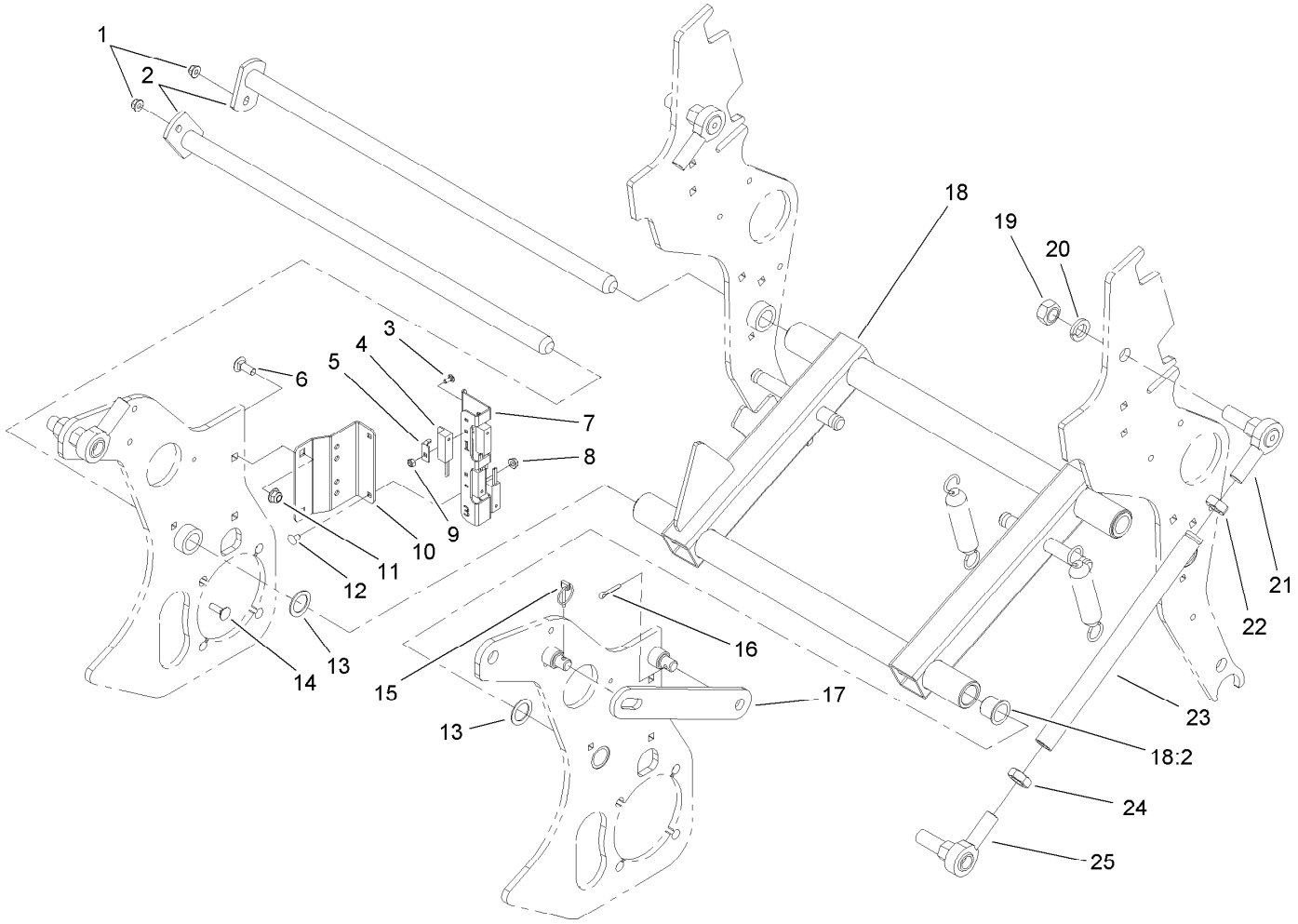

H-Frame Assembly

Ref.	Part Number	Qty.	Description
1	104-8300	2	Nut-HF, NI
2	105-0950	2	Pivot Shaft ASM
3	104-1450	4	Bolt-CARR
4	100-1270	4	Switch-Proximity
5	100-4872	4	Plate-Switch, Neutral
6	3231-2	2	Bolt-CARR
7	108-6732	1	Bracket-Switch
8	32128-10	2	Nut-Lock, HHF
9	3296-2	4	Nut-Lock, NI
10	105-1006-01	1	Bracket-Switch
11	104-8301	2	Nut-HF, NI
12	3229-10	2	Screw-CARR
13	10-8110	3	Washer-Thrust

Ref.	Part Number	Qty.	Description
14	3230-2	2	Bolt-CARR
15	3290-495	1	Pin-Klik
16	3272-21	1	Pin-Cotter
17	105-0983-01	1	Bar-Prop
18	112-6516	1	H Frame ASM
18:2	99-3631	4	Bushing-Flange
19	3219-7	4	Nut-Hex
20	3253-9	4	Washer-Lock
21	105-1025	2	End-Rod
22	3220-17	2	Nut-Jam, LH
23	105-1007	2	Link-Upper
24	3220-7	2	Nut-Jam
25	2411-40	2	End-Rod

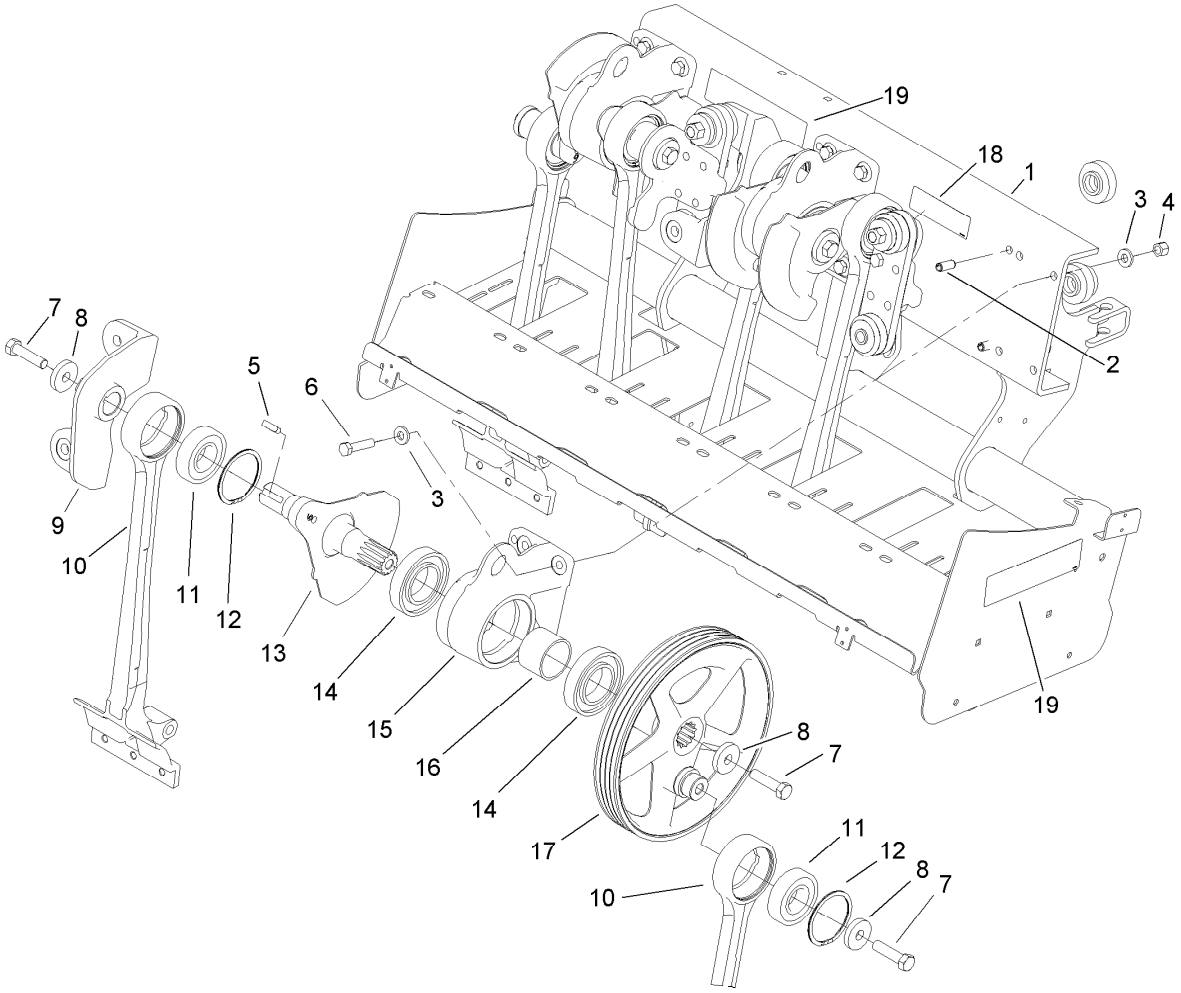

Coring Head Crank No. 1 and 2 Assembly

Ref.	*Part Number*	*Qty.*	*Description*
1	110-1495-01	1	Frame-Rear
2	105-1041	2	Pin-Spring
3	107-3395	8	Washer-Hardened
4	3296-23	4	Nut-Lock, NI
5	105-1089	1	Key-Square
6	325-9	4	Screw-HH
7	327-7	3	Screw-HH
8	105-1016	3	Washer-Flat
9	105-0969	1	Coupling-No.2
10	106-8873	2	Arm-Stomper
11	106-8871	2	Bearing-Ball
12	106-8872	2	Ring-Retaining
13	105-0958	1	Crankarm-No. 2, 4, 6
14	105-0965	2	Bearing-Ball
15	105-0956	1	Housing-Bearing
16	105-1017	1	Spacer
17	105-0967	1	Pulley-Crankshaft
18	107-7548	1	Decal-Torque, Bolt
19	107-7534	3	Decal-Warning

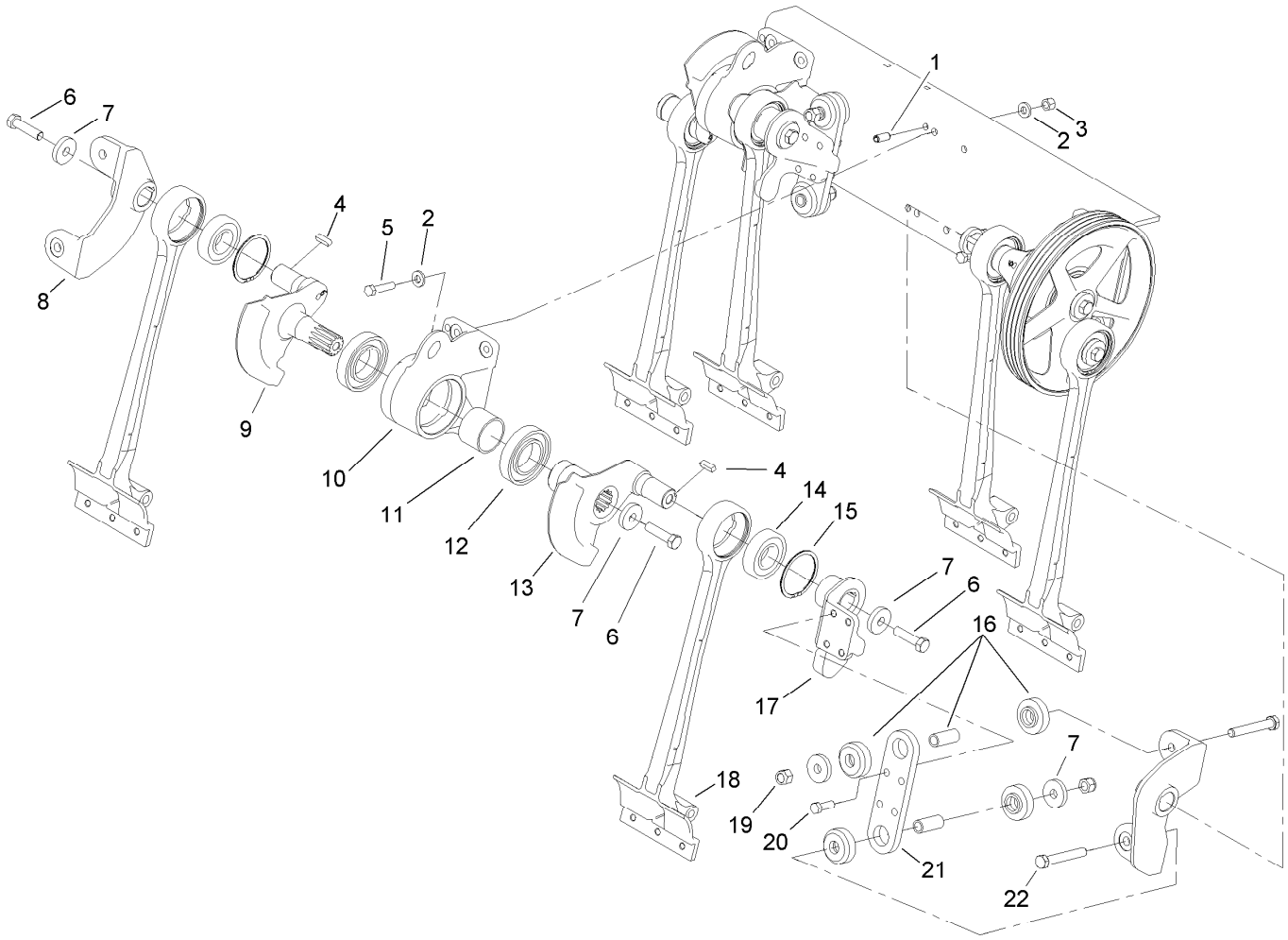

Coring Head Crank No. 3 and 4 Assembly

Ref.	Part Number	Qty.	Description
1	105-1041	2	Pin-Spring
2	107-3395	8	Washer-Hardened
3	3296-23	4	Nut-Lock, NI
4	105-1089	2	Key-Square
5	325-9	4	Screw-HH
6	327-7	3	Screw-HH
7	105-1016	5	Washer-Flat
8	105-0946	1	Coupling-No. 4
9	105-0958	1	Crankarm-No. 2, 4, 6
10	105-0956	1	Housing-Bearing
11	105-1017	1	Spacer
12	105-0965	2	Bearing-Ball
13	105-0960	1	Crankarm-No. 3, 5
14	106-8871	2	Bearing-Ball
15	106-8872	2	Ring-Retaining
16	105-0963	2	Mount-ISO, Crank
17	105-0971	1	Coupling-No. 3
18	106-8873	2	Arm-Stomper
19	3296-53	2	Nut-Lock, NI
20	325-6	4	Screw-HH
21	105-0974-03	1	Plate-Coupling
22	327-29	2	Screw-HH

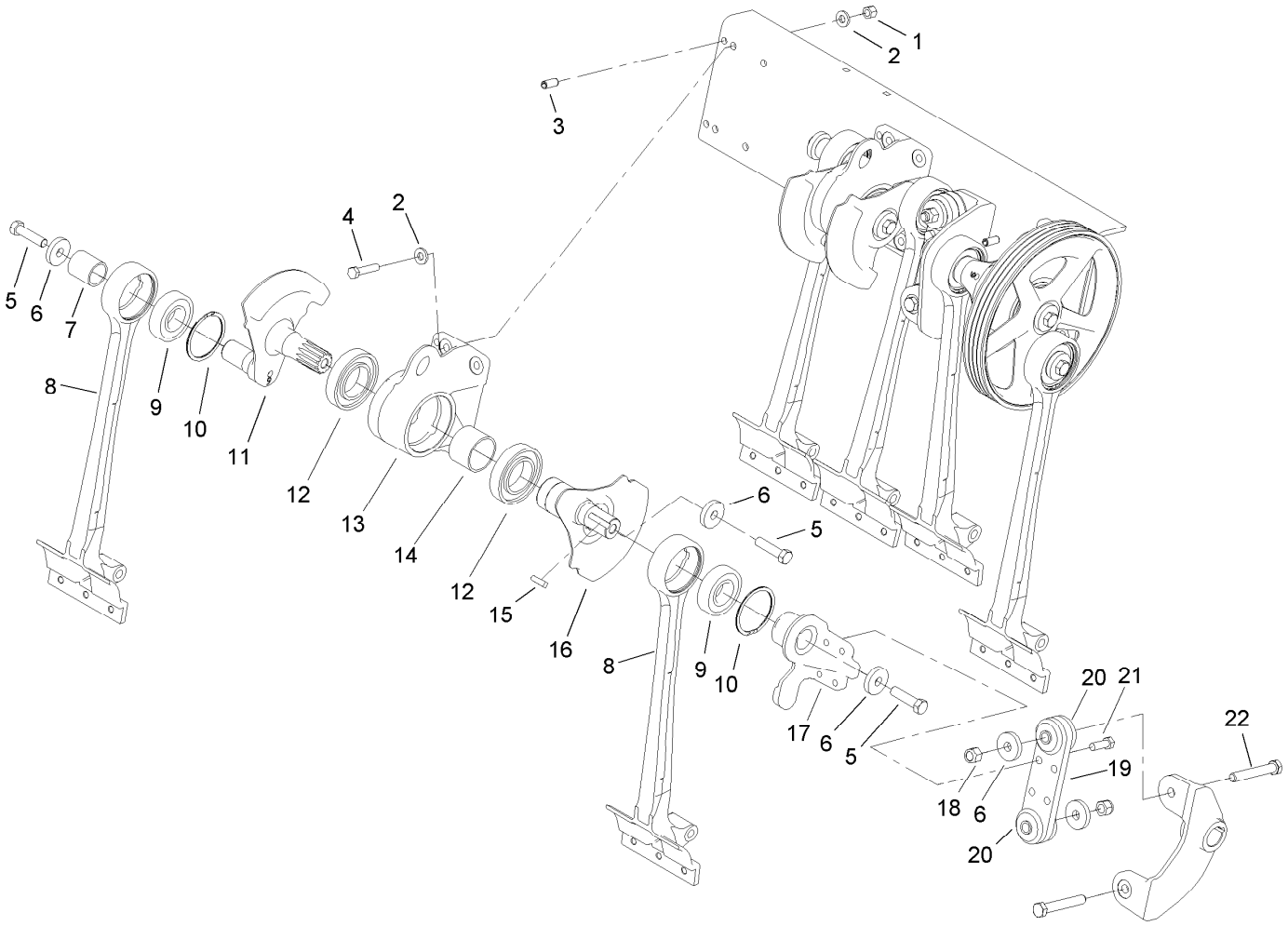

Coring Head Crank No. 5 and 6 Assembly

Ref.	*Part Number*	*Qty.*	*Description*
1	3296-23	4	Nut-Lock, NI
2	107-3395	8	Washer-Hardened
3	105-1041	2	Pin-Spring
4	325-9	4	Screw-HH
5	327-7	3	Screw-HH
6	105-1016	5	Washer-Flat
7	105-1039	1	Tube-Spacer
8	106-8873	2	Arm-Stomper
9	106-8871	2	Bearing-Ball
10	106-8872	2	Ring-Retaining
11	105-0958	1	Crankarm-No. 2, 4, 6
12	105-0965	2	Bearing-Ball
13	105-0956	1	Housing-Bearing
14	105-1017	1	Spacer
15	105-1089	1	Key-Square
16	105-0960	1	Crankarm-No. 3, 5
17	105-0948	1	Coupling-No. 5
18	3296-53	2	Nut-Lock, NI
19	105-0974-03	1	Plate-Coupling
20	105-0963	2	Mount-ISO, Crank
21	325-6	4	Screw-HH
22	327-29	2	Screw-HH

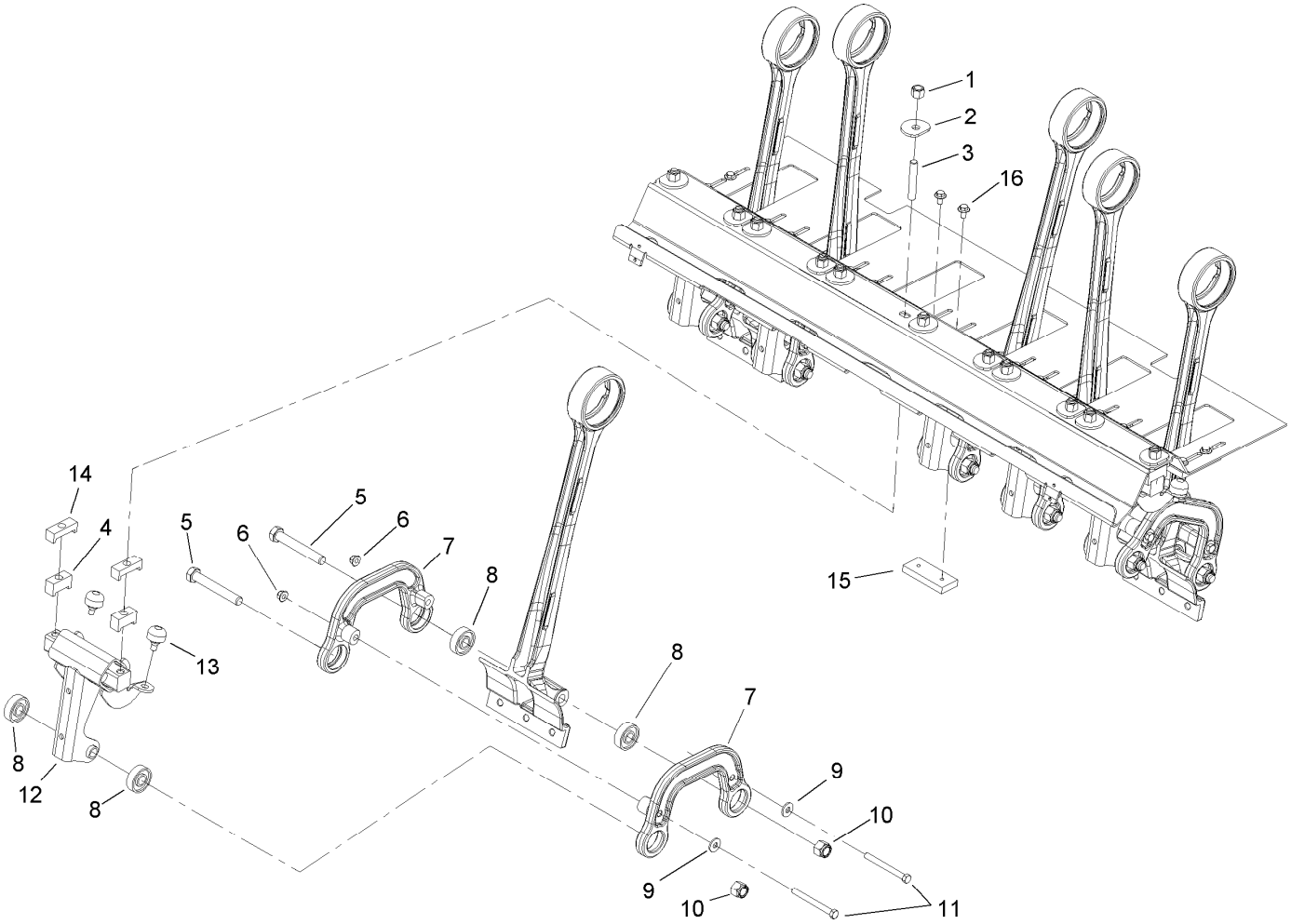

Coring Head Roto Link Assembly

Ref.	*Part Number*	*Qty.*	*Description*
1	32128-23	12	Nut-HF
2	107-7543	12	Washer-Hardened
3	105-1088	12	Stud
4	105-0999	12	Standoff-Damper V
5	327-29	12	Screw-HH
6	104-8301	12	Nut-HF, NI
7	105-1000	12	Link-Damper
8	251-311	24	Bearing-Ball
9	80-6990	12	Washer-Hardened
10	3296-53	12	Nut-Lock, NI
11	323-42	12	Screw-HH
12	106-8922	6	Damper
13	87-2440	12	Bumper-Rubber
14	107-7582	12	Spacer-Damper, Top V
15	107-7584	7	Plate-Bumper V
16	3234-7	14	Screw-HHF

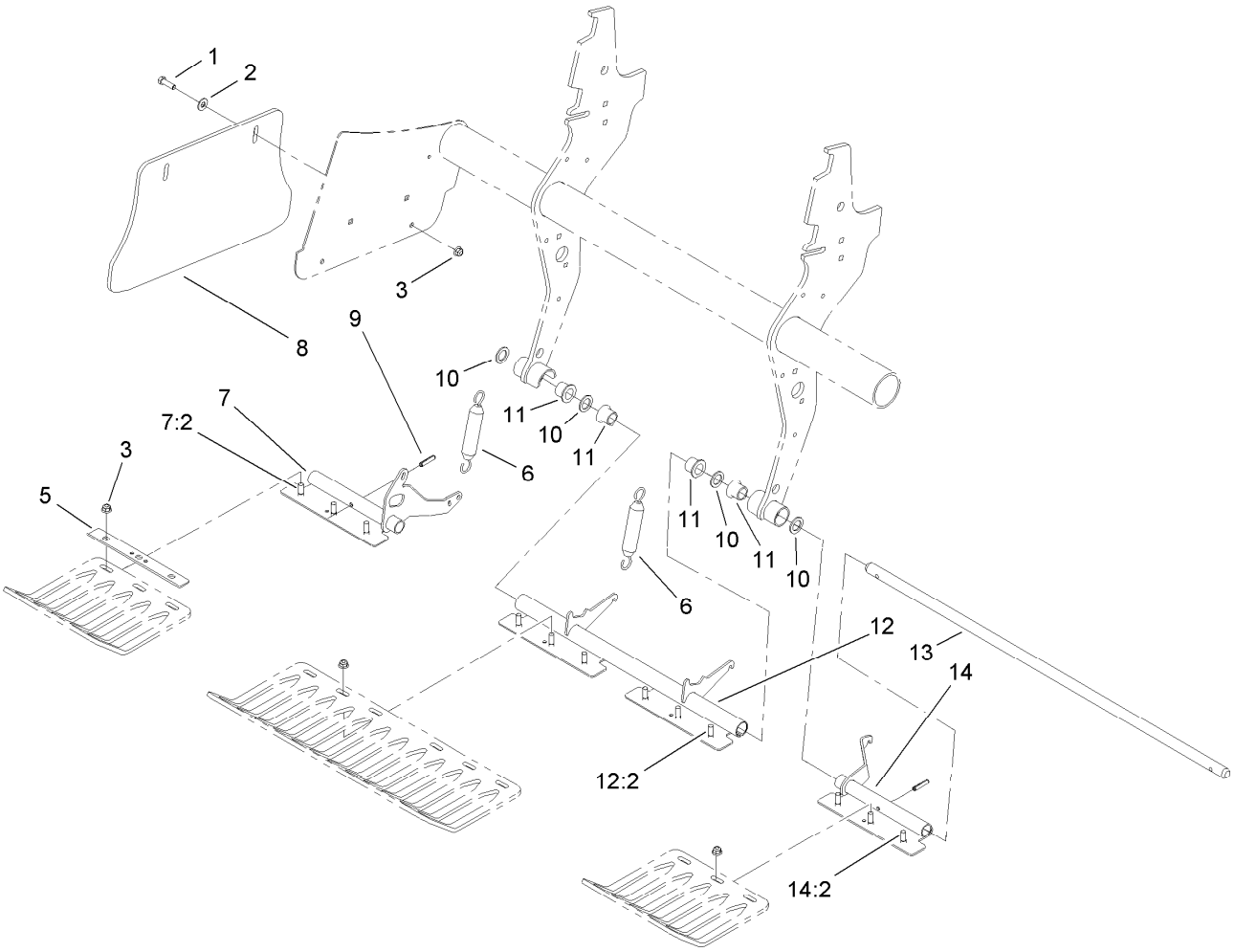

Coring Head Turf Guard Assembly

Ref.	Part Number	Qty.	Description
1	323-7	4	Screw-HH
2	3256-4	4	Washer-Flat
3	104-8301	16	Nut-HF, NI
5	110-4274-03	4	Clamp-Guard, Turf
6	66-4270	2	Spring-Extension
7	110-4395	1	LH Turf Guard Bracket ASM
7:2	110-4268	3	Screw-Neck, Rib
8	105-1069	2	Shield-Side
9	32121-25	2	Pin-Roll
10	3-7898	4	Washer-Thrust
11	107-7581	4	Bushing-Flange, Keyed
12	110-4393	1	Center Turf Guard Bracket ASM
12:2	110-4268	6	Screw-Neck, Rib
13	105-1024	1	Shaft-Guard, Turf
14	110-4394	1	RH Turf Guard Bracket ASM
14:2	110-4268	3	Screw-Neck, Rib

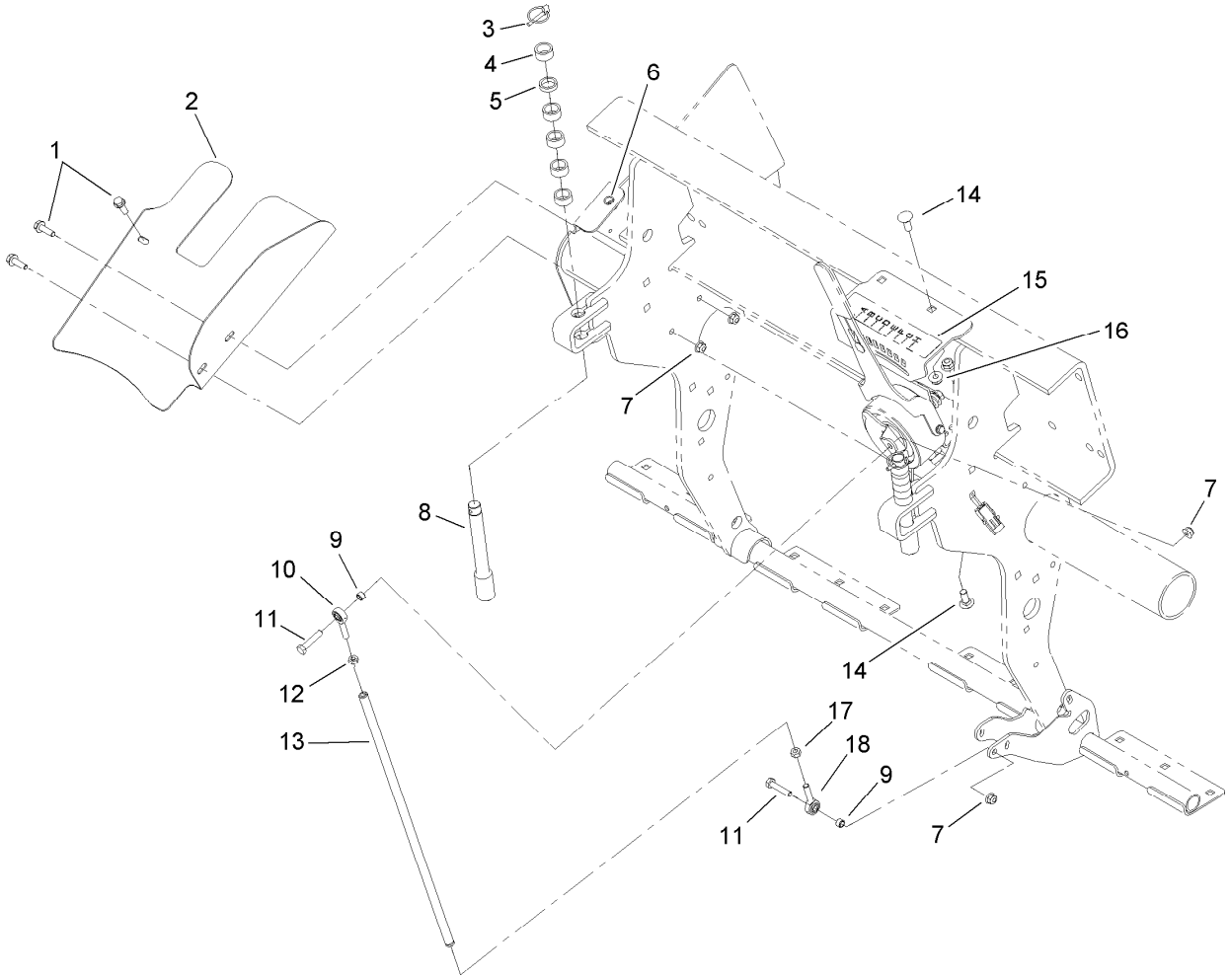

Depth Control Assembly

Ref.	Part Number	Qty.	Description
1	3234-17	3	Screw-HHF
2	105-1092-01	1	Shield-Top, Belt
3	3290-495	2	Pin-Klik
4	74-3730	10	Spacer-Spindle, Rear
5	105-3828	2	Spacer
6	32148-7	1	Nut-Clinch
7	104-8300	4	Nut-HF, NI
8	105-1004	2	Pin-Stop, Depth
9	92-3133	2	Spacer-Lever, Traction
10	2411-52	1	Bearing-Rod End, RH
11	322-7	2	Screw-HH
12	3220-2	1	Nut-Jam
13	105-1067	1	Tube-Control, Depth
14	3231-2	4	Bolt-CARR
15	106-8853	1	Decal-Control, Depth
16	104-8301	4	Nut-HF, NI
17	3220-20	1	Nut-Jam
18	2411-53	1	Bearing-Rod End, LH

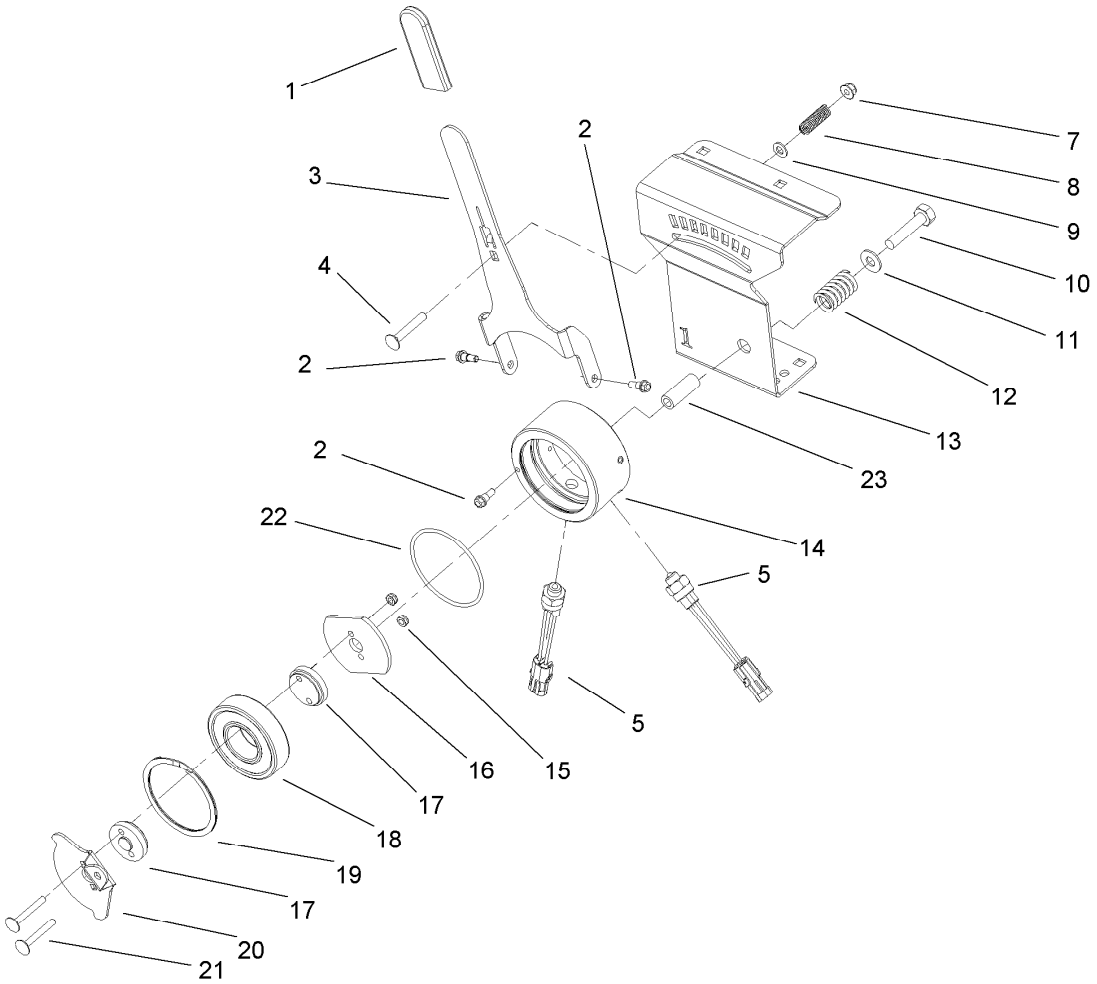

Depth Actuator Assembly

Ref.	Part Number	Qty.	Description
1	21-1880	1	Grip-Handle
2	42-3560	3	Bolt-Shoulder
3	106-8860-03	1	Arm-Control, Depth
4	3230-6	1	Bolt-CARR
5	72-4320	2	Switch-Ball
7	104-8300	1	Nut-HF, NI
8	95-1821	1	Spring-Compression
9	3256-23	1	Washer-Plain
10	322-11	1	Screw-HH
11	3256-4	1	Washer-Flat
12	66-9010	1	Spring-Compression
13	106-8865-03	1	Support-Control, Depth
14	108-2129	1	Housing-Control, Depth
15	3296-56	2	Nut-Lock, NI
16	106-8864	1	Actuator-Switch
17	106-8863	2	Spacer-Control, Depth
18	106-8871	1	Bearing-Ball
19	106-8872	1	Ring-Retaining
20	106-8861-03	1	Arm-Actuator, Switch
21	3230-33	2	Screw-CARR
22	237-33	1	O-Ring
23	95-6448	1	Spacer

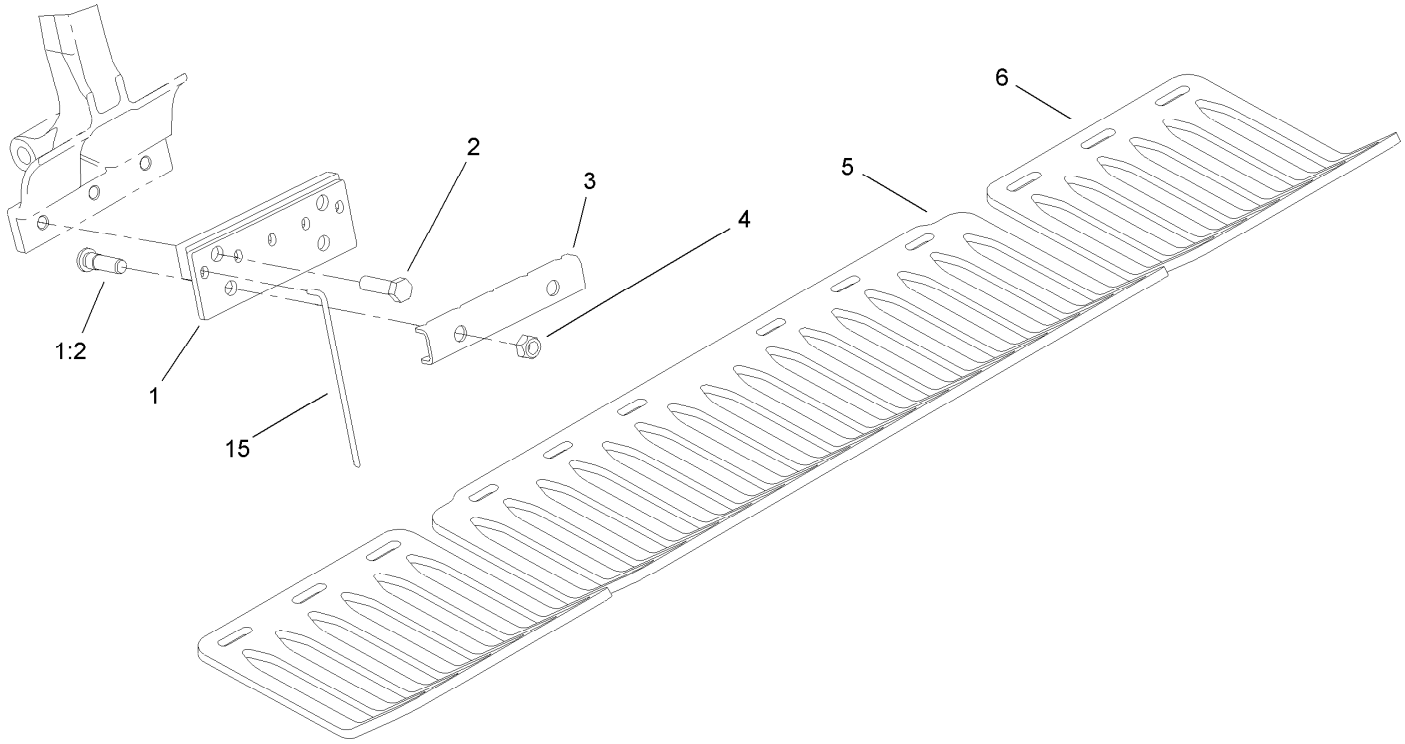

Needle Tine Holder
Model No. 09221 (Optional)

Ref.	*Part Number*	*Qty.*	*Description*
1	105-1099	6	Needle Tine Holder ASM
1:2	10-6830	2	Stud-Type, Drive
2	325-7	12	Screw-HH
3	105-1098-03	6	Clamp-Tine, Needle
4	3296-19	12	Nut-Hex
5	105-1111	1	Turfguard-Mini Tine, Long
6	105-1110	2	Turfguard-Mini Tine, Short
15	100-3621	30	Tine-Needle, 8Mm X 7.38
15	100-3620	30	Tine-Needle, 5Mm X 6.43

See Toro distributor for Titan tine catalog.

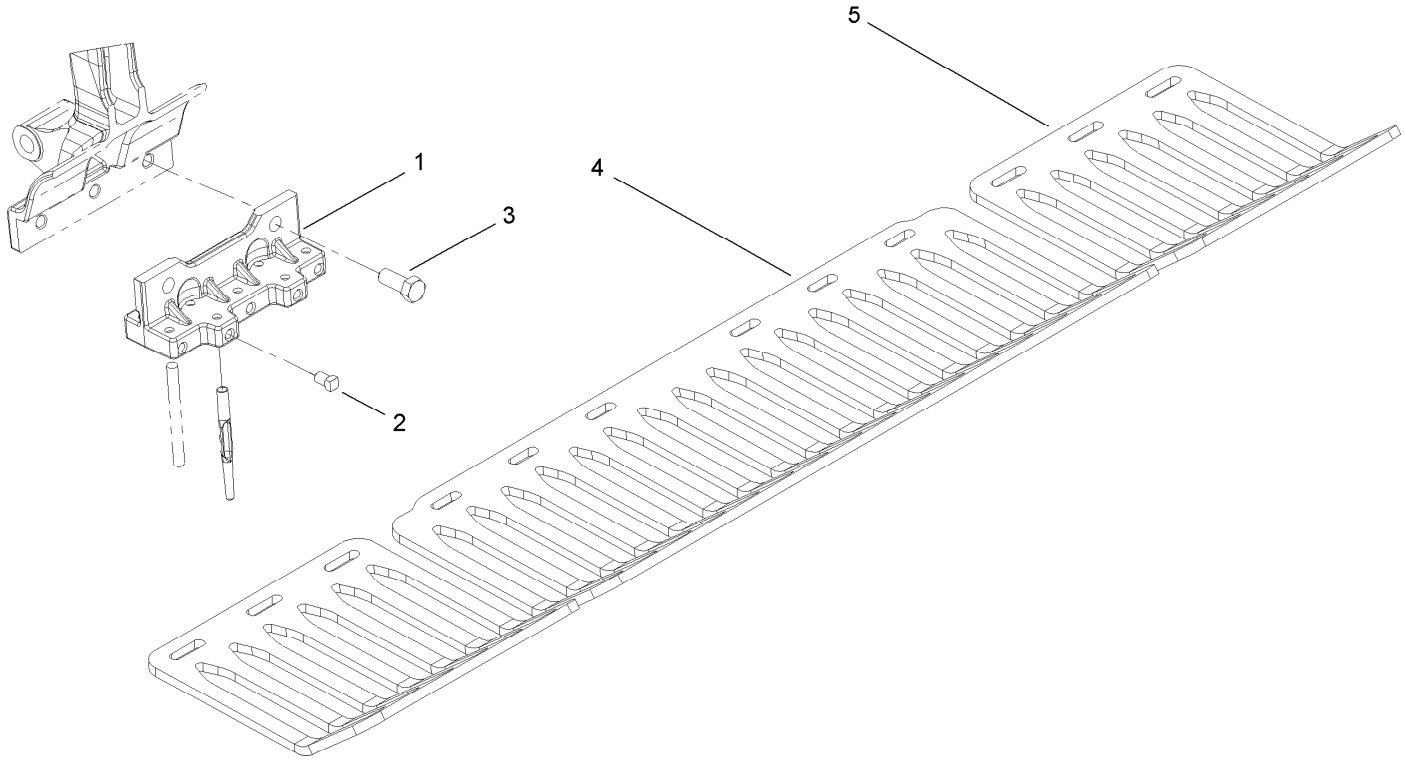

Mini Tine, 2 X 5 Holder
Model No. 09222 (Optional)

Ref.	*Part Number*	*Qty.*	*Description*
1	105-1184	6	Tineholder
2	3243-1	60	Screw-Set
3	325-5	12	Screw-HH
4	105-1111	1	Turfguard-Mini Tine, Long ●
5	105-1110	2	Turfguard-Mini Tine, Short ●

● Optional Equipment

See Toro distributor for Titan tine catalog.

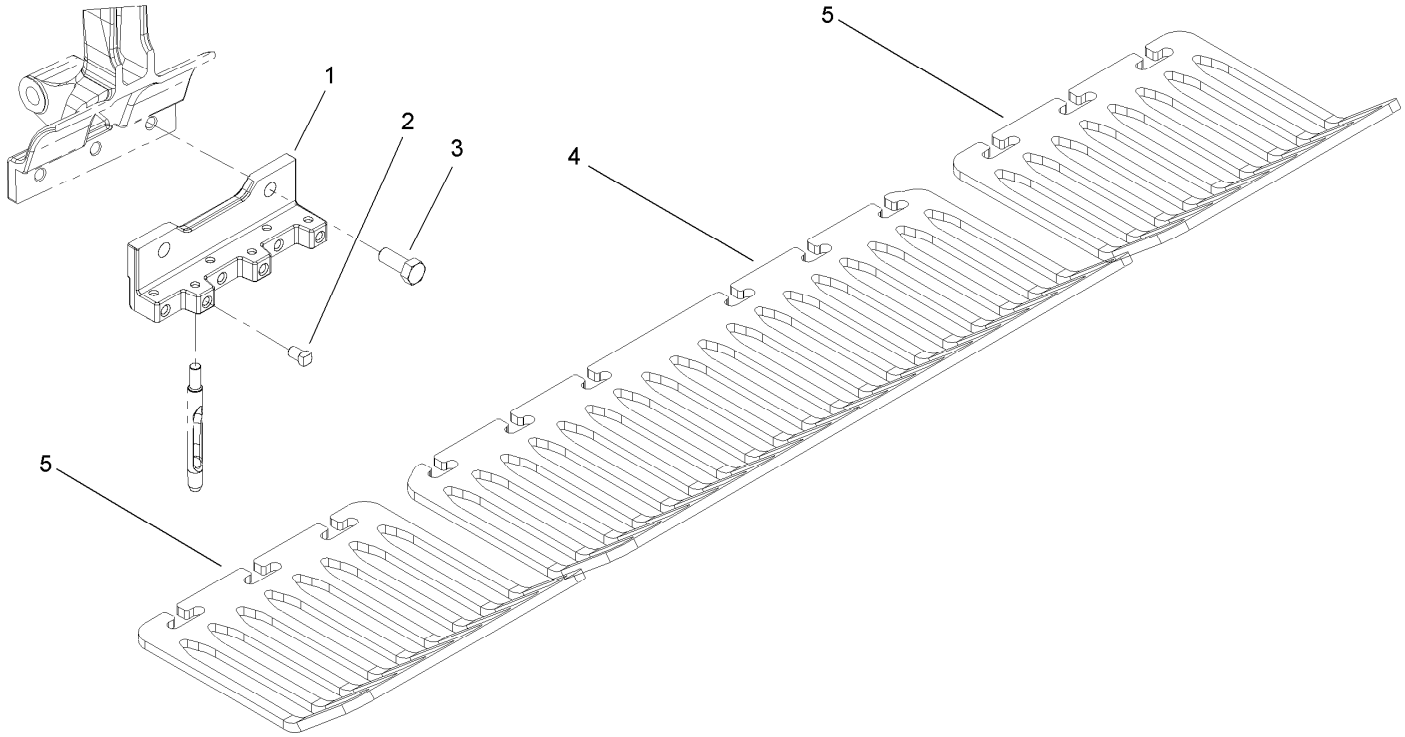

Mini Tine, 1 X 6 Holder
Model No. 09233 (Optional)

Ref.	*Part Number*	*Qty.*	*Description*
1	108-6809	6	Holder-Tine
2	3243-1	36	Screw-Set
3	325-5	12	Screw-HH
4	110-4370	1	Guard-Turf, 6 Tine Long ●
5	110-4369	2	Guard-Turf, 6 Tine Short ●

● Optional Equipment

See Toro distributor for Titan tine catalog.

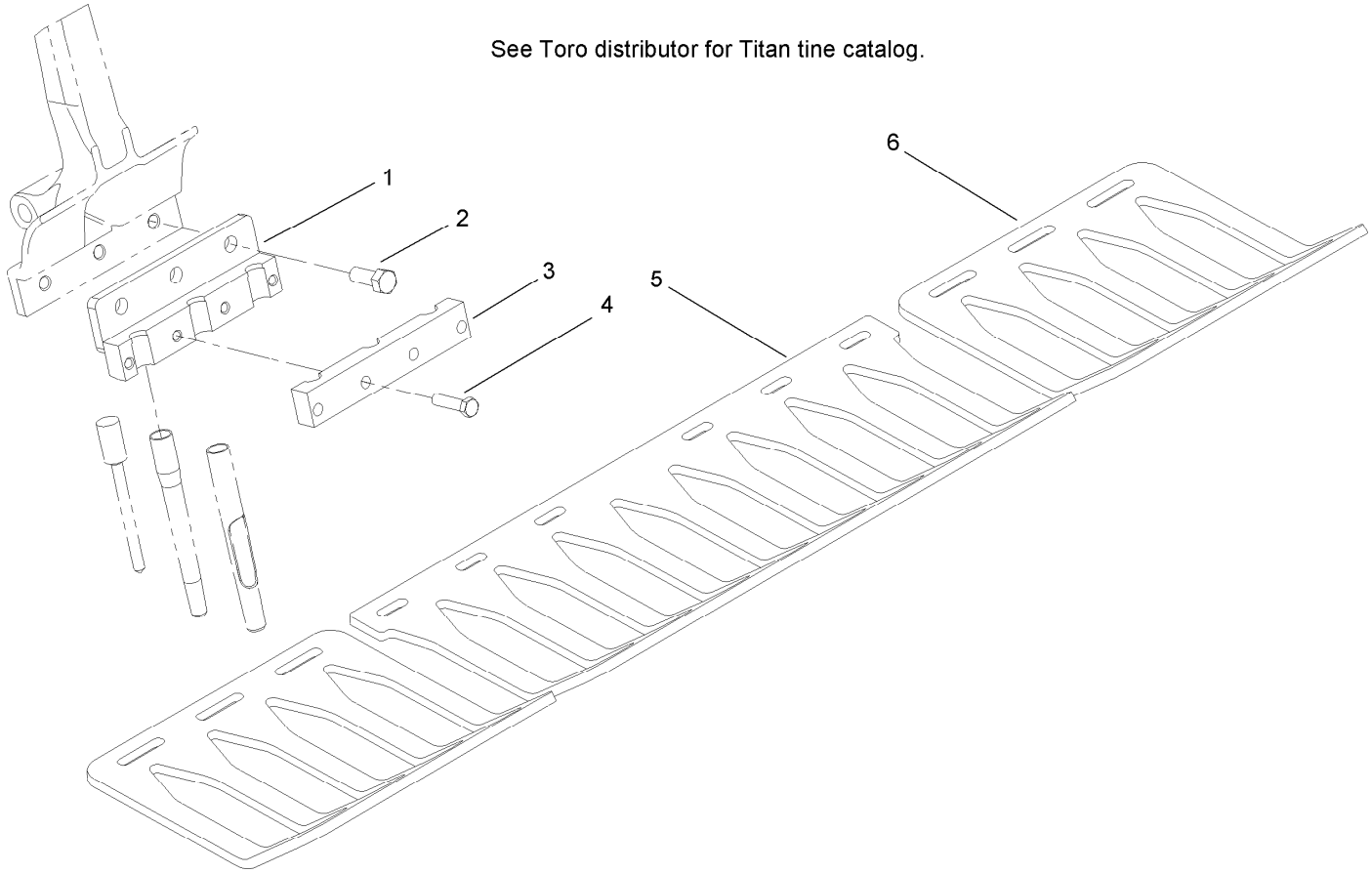

Three Tine, 3/4 Inch Holder
Model No. 09223 (Optional)

Ref.	*Part Number*	*Qty.*	*Description*
1	105-1036-03	6	3 Tine Holder ASM
2	325-5	18	Screw-HH
3	105-1038-03	6	Clamp-Holder, 3 Tine
4	323-8	24	Screw-HH
5	105-1107	1	Turfguard-3 Tine, Long ●
6	105-1106	2	Turfguard-3 Tine, Short ●

● Optional Equipment

See Toro distributor for Titan tine catalog.

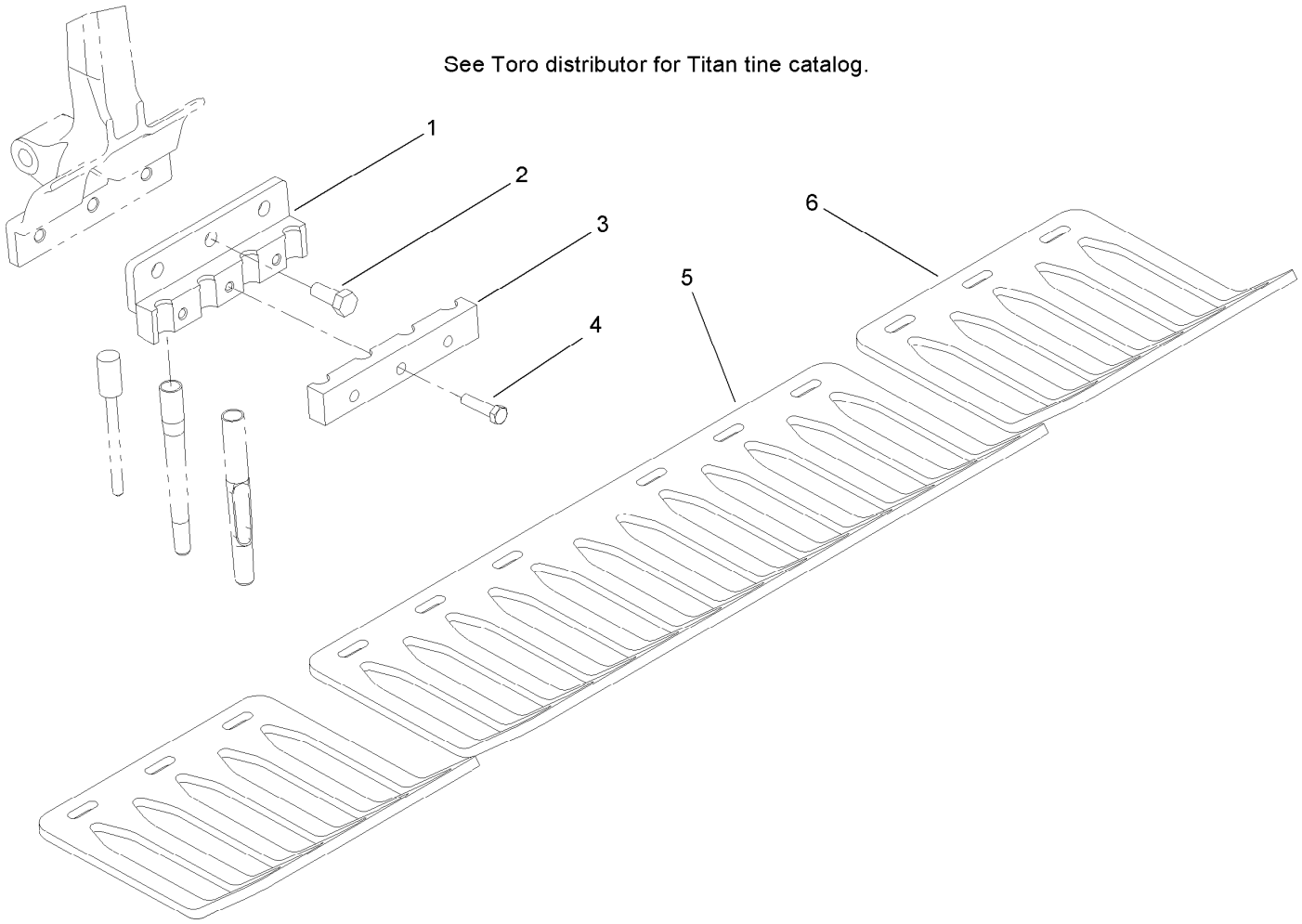

Four Tine, 3/4 Inch Holder
Model No. 09224 (Optional)

Ref.	*Part Number*	*Qty.*	*Description*
1	105-1045-03	6	4 Tine Holder ASM
2	325-5	18	Screw-HH
3	105-1032-03	6	Clamp-Holder, 4 Tine
4	323-8	18	Screw-HH
5	105-1105	1	Turfguard-4 Tine, Long ●
6	105-1104	2	Turfguard-4 Tine, Short ●

● Optional Equipment

See Toro distributor for Titan tine catalog.

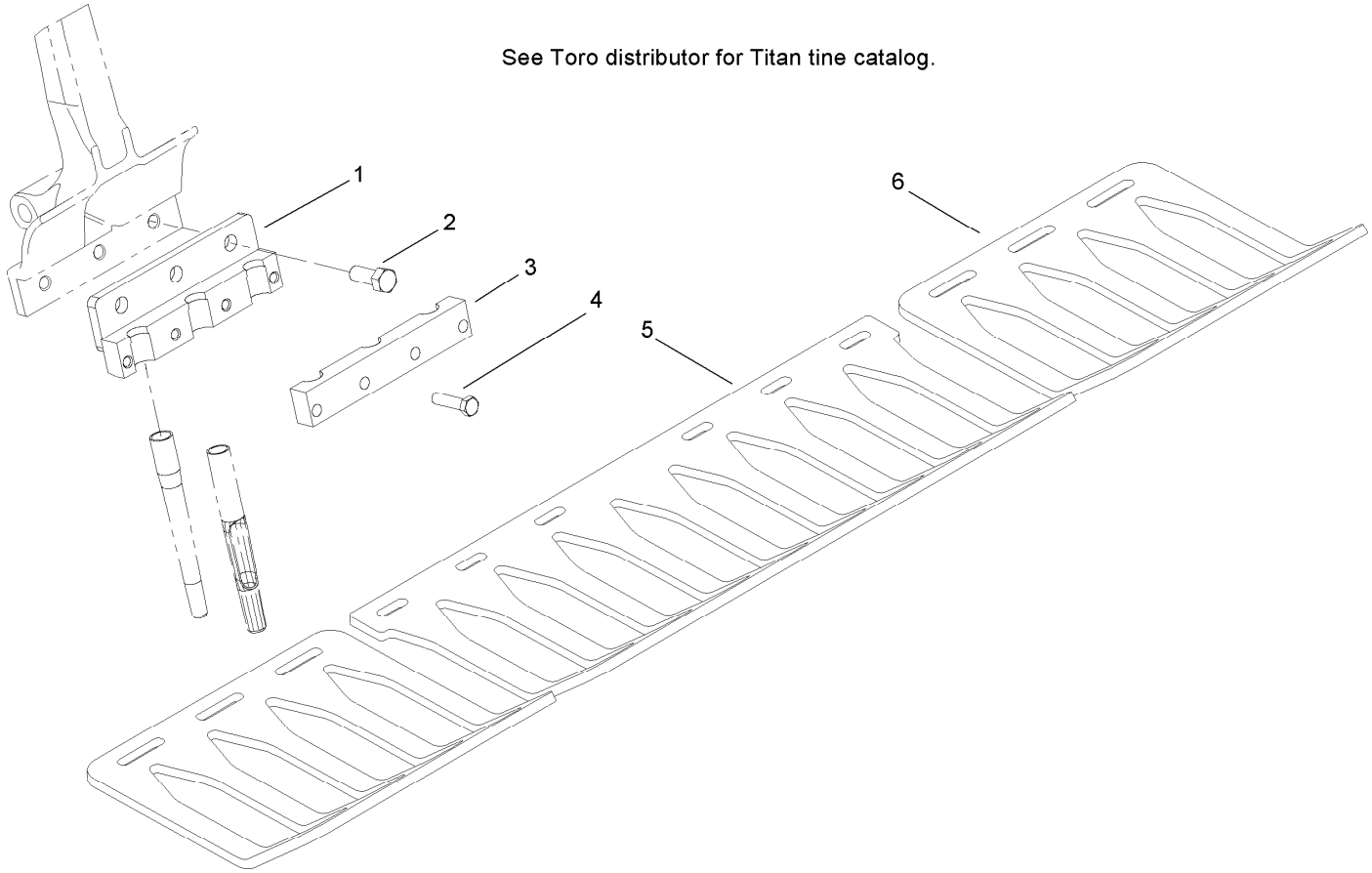

Three Tine, 7/8 Inch Tine Holder Model No. 09226 (Optional)

Ref.	*Part Number*	*Qty.*	*Description*
1	108-2122-03	6	Holder ASM
2	325-5	18	Screw-HH
3	108-2124-03	6	Clamp-Tine
4	323-8	24	Screw-HH
5	105-1107	1	Turfguard-3 Tine, Long ●
6	105-1106	1	Turfguard-3 Tine, Short ●

● Optional Equipment

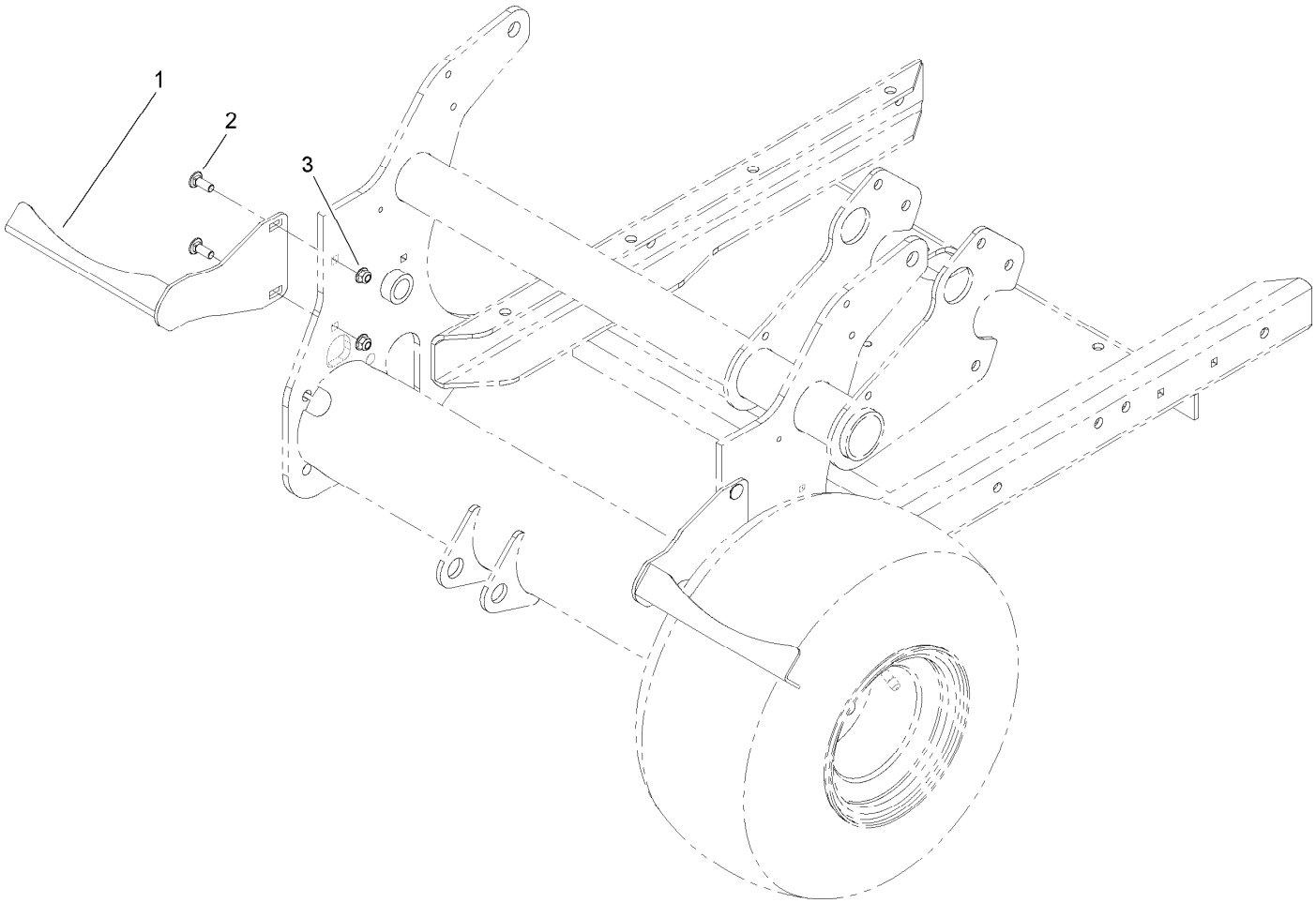

Tire Scraper
Model No. 09225 (Optional)

Ref.	*Part Number*	*Qty.*	*Description*
1	107-7531-03	2	Scraper-Wheel
2	3231-26	4	Screw-CARR
3	104-8301	4	Nut-HF, NI

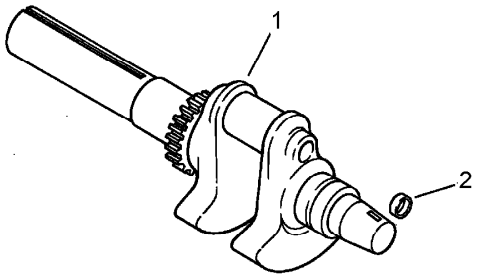

Crankshaft Assembly
Kohler CH23S 76585

Ref.	*Part Number*	*Qty.*	*Description*
1	24 014 72-S	1	Crankshaft ASM (Includes 2) ●
2	52 139 09-S	1	Plug-Cup ●

● Obtain parts from www.kohlerplus.com

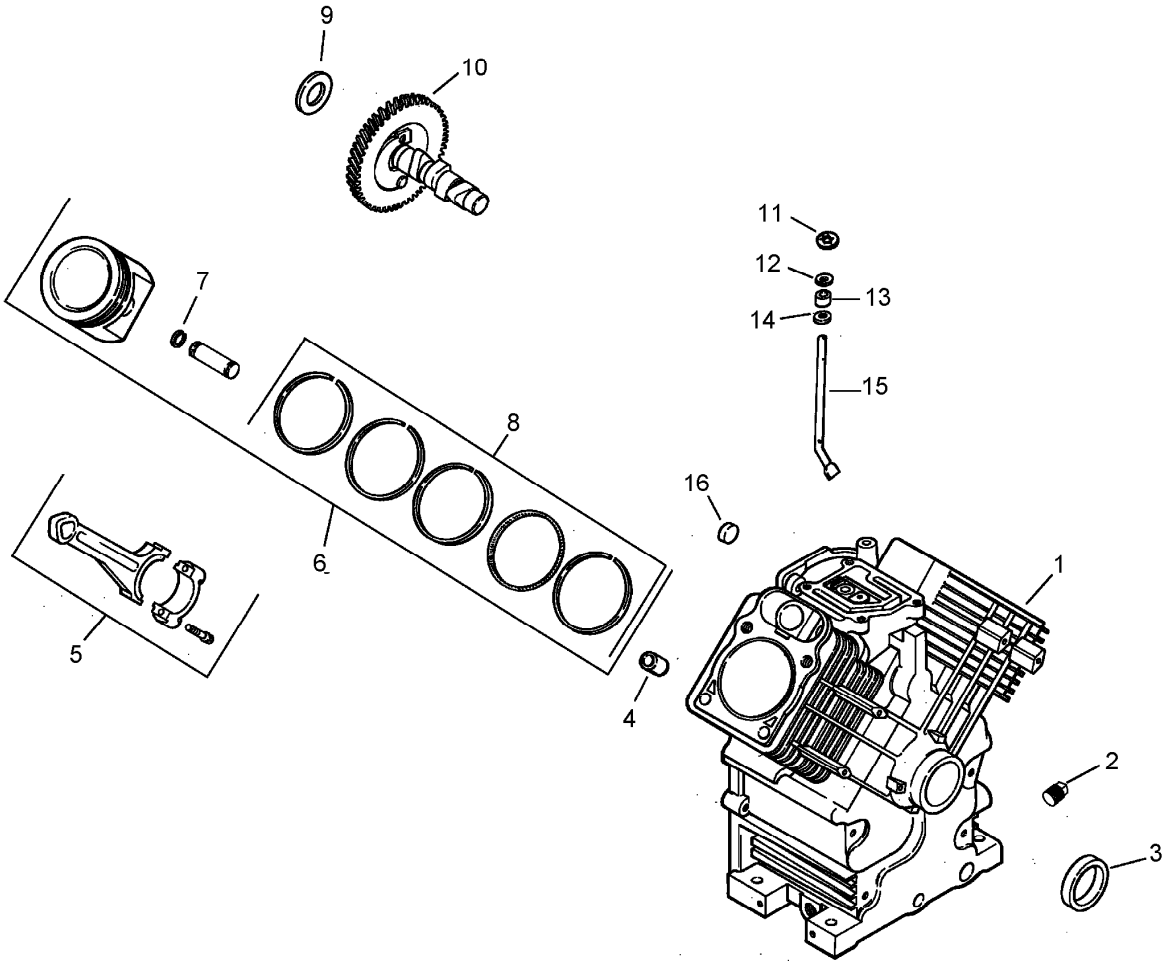

Crankcase Assembly
Kohler CH23S 76585

Ref.	Part Number	Qty.	Description
1		1	Crankcase (Use: Short Block Or Miniblock) ● ■
2	25 139 57-S	2	Plug-Pipe, Sq HD (3/8) ■
3	24 032 01-S	1	Seal-Oil ■
4	24 380 13-S	6	Pin-Locating ■
5	24 067 13-S	2	Rod-Connecting (Standard) ■
5	24 067 14-S	2	Rod-Connecting (.25) ■
6	24 874 09-S	2	Piston W/Ring Set (Std.) (Includes 7, 8) ■
6	24 874 15-S	2	Piston W/Ring Set (.08) (Includes 7, 8) ■
6	24 874 10-S	2	Piston W/Ring Set (.25) (Includes 7, 8) ■
6	24 874 11-S	2	Piston W/Ring Set (.50) (Includes 7, 8) ■
7	24 018 01-S	4	Retainer-Pin, Piston ■
8	24 108 08-S	2	Ring Set (STD And .08) ■
8	24 108 09-S	2	Ring Set (.25) ■
8	24 108 10-S	2	Ring Set (.50) ■
9	12 422 09-S	1	Shim-Camshaft (Red .032) ■
9	12 422 13-S	1	Shim-Camshaft (Black .04) ■
9	12 422 07-S	1	Shim-Camshaft (White .028) ■
9	12 422 08-S	1	Shim-Camshaft (Blue .03) ■
9	12 422 10-S	1	Shim-Camshaft (Yellow .034) ■
9	12 422 11-S	1	Shim-Camshaft (Green .036) ■
9	12 422 12-S	1	Shim-Camshaft (Gray .038) ■
10	24 012 10-S	1	Camshaft Kit ■
11	24 018 09-S	1	Retainer-Ring ■
12	M-931010-S	1	Washer-Flat (9Mm) ■
13	28 032 09-S	1	Seal-Cross Shaft, Governor ■
14	24 468 15-S	1	Washer-Flat (11/32) ■
15	24 144 38-S	1	Shaft-Cross, Governor ■
16	52 139 09-S	1	Plug-Cup ■

● Not serviced separately

■ Obtain parts from www.kohlerplus.com

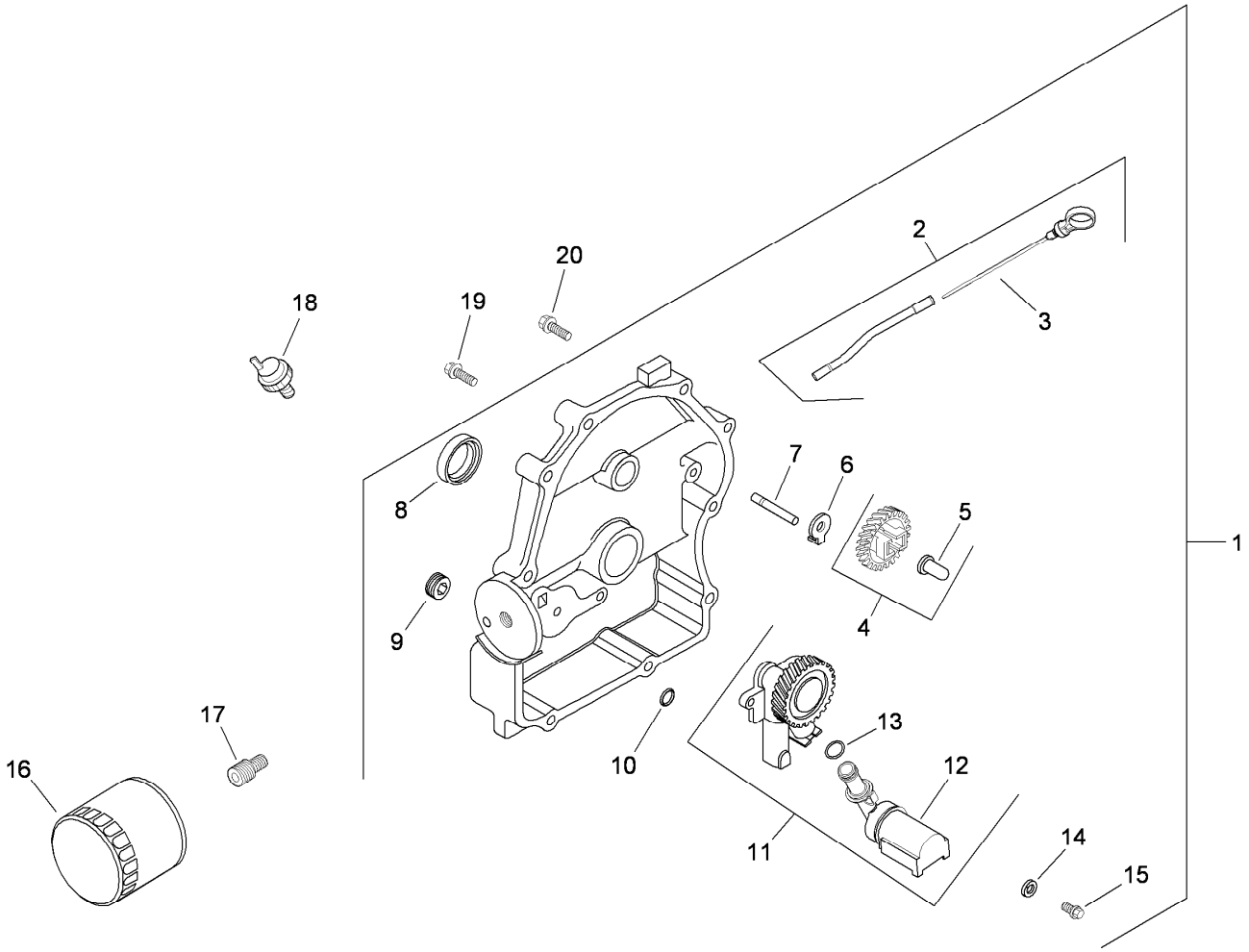

Oil Pan and Lubrication Assembly Kohler CH23S-76585

Ref.	Part Number	Qty.	Description
1	54 009 01-S	1	Closure Plate ASM (Includes 2-15) ■
2	24 755 121-S	1	Dipstick And Tube ASM (Includes 3) ■
3	24 038 10-S	1	Dipstick ■
4	24 043 12-S	1	Governor Gear ASM (Includes 5) ■
5	12 380 01-S	1	Pin-Regulating, Governor ■
6	24 448 02-S	1	Tab-Locking ■
7	12 144 02-S	1	Shaft-Gear, Governor ■
8	52 032 08-S	1	Seal-Oil (P-T-O End) ■
9	25 139 60-S	1	Plug-Pipe, Countersunk (1/8) ■
10	24 153 08-S	1	O-Ring ■
11	24 393 37-S	1	Oil Pump ASM (Includes 12, 13) ■
12	24 381 04-S	1	Tube-Pick Up, Oil ■
13	24 153 01-S	1	O-Ring ■
14	M-631005-S	2	Washer-Flat (6 Mm) ■
15	M-645025-S	2	Screw-Flange, Thread Forming (M6X1.0X25) ■
16	12 050 01-S	1	Filter-Oil ■
17	24 136 01-S	1	Nipple-Filter, Oil ■
18	25 099 24-S	1	Switch-Pressure ■
19	24 086 16-S	9	Screw-HF (M8X1.25X45) ■
20	24 086 17-S	1	Screw-Flange (M8X1.25X45) ■
	25 113 05-S	1	Decal-Sentry, Oil ● ■

● Not illustrated

■ Obtain parts from www.kohlerplus.com

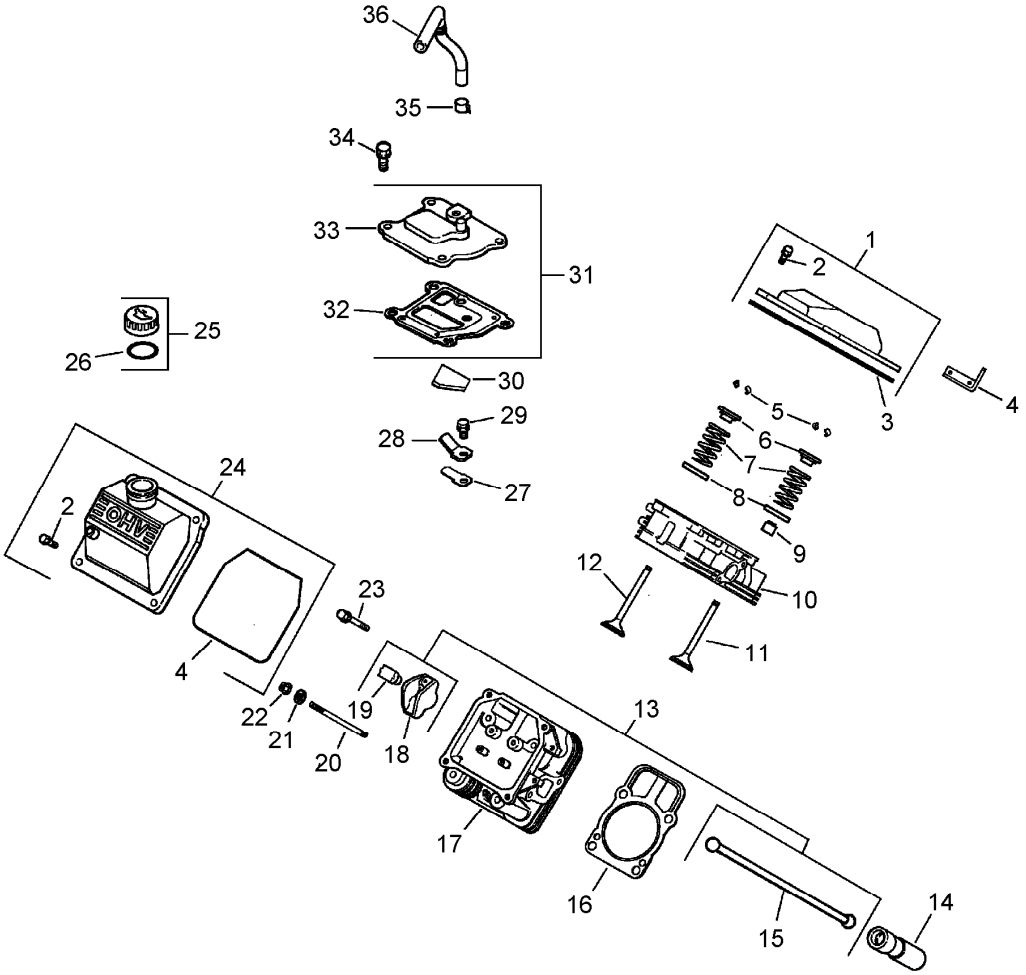

Head / Valve / Breather Assembly
Kohler CH23S 76585

Ref.	Part Number	Qty.	Description
1	24 755 141-S	1	Plain Valve Cover Kit (Includes 2-3) ●
2	M-651030-S	4	Screw-Flange (M6X1.0X30) ●
3	24 153 28-S	1	O-Ring ●
4	24 445 01-S	1	Strap-Lifting ●
5	12 755 03-S	4	Retainer Kit ●
6	12 173 01-S	4	Cap-Spring, Valve ●
7	24 089 02-S	4	Spring-Valve ●
8	235011-S	4	Retainer-Spring ●
9	66 032 05-S	2	Seal-Stem, Valve ●
10	24 318 68-S	1	No. 1 Cylinder Head ASM ●
11	24 017 01-S	2	Valve-Intake (STD) ●
11	24 017 02-S	2	Valve-Intake (.25) ●
12	24 016 01-S	2	Valve-Exhaust (STD) ●
12	24 016 02-S	2	Valve-Exhaust (.25) ●
13	24 755 66-S	1	Valve Train Kit (Includes 15, 18-19) ●
14	25 351 01-S	4	Lifter-Valve ●
15	24 411 05-S	4	Rod-Push ●
16	24 841 02-S	2	Cylinder Head Gasket Kit (Includes 21-22) ●
17	24 318 71-S	1	No. 2 Cylinder Head ASM ●
18	25 186 01-S	4	Arm-Rocker ●
19	24 599 01-S	4	Pivot-Arm, Rocker ●
20	24 072 09-S	8	Stud (M8X1.25Xm10X1.5X105Mm) ●
21	24 468 16-S	8	Washer-Flat (8.6 Mm) ●
22	24 100 10-S	8	Nut-Flange (M8X1.25) ●
23	66 086 07-S	4	Screw ●
24	24 755 140-S	1	Oil Fill Valve Cover Kit (Includes 2-3) ●
25	25 755 13-S	1	Oil Fill Cap Kit (Includes 26) ●
26	25 153 02-S	1	O-Ring ●
27	24 402 03-S	1	Reed-Breather ●
28	66 018 04-S	1	Retainer-Reed ●
29	M-545010-S	1	Screw-HHFTF (M5X.80X10) ●
30	24 050 01-S	1	Filter-Breather ●
31	24 033 01-S	1	Breather Kit (Includes 32-33) ●
32	24 041 51-S	1	Gasket-Breather ●
33	24 096 86-S	1	Cover-Breather ●

● Obtain parts from www.kohlerplus.com

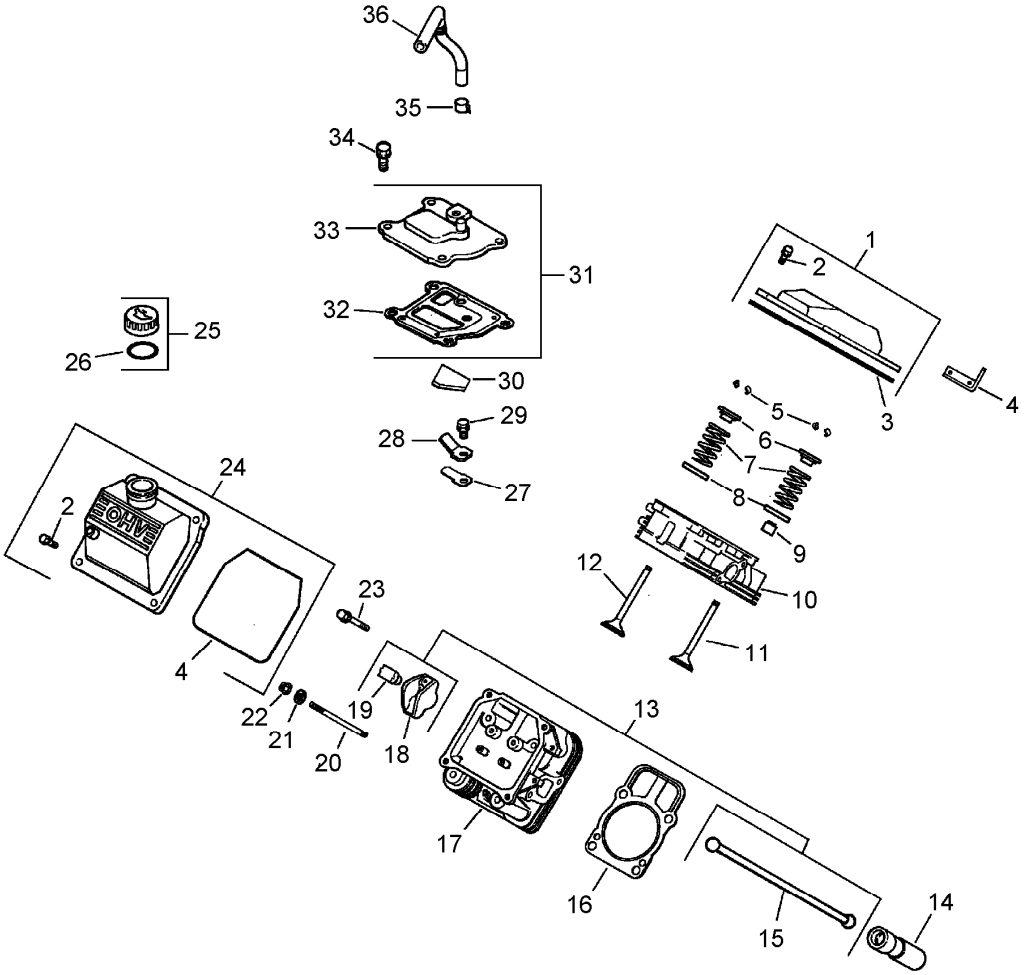

Head / Valve / Breather Assembly
Kohler CH23S 76585 (continued)

Ref.	Part Number	Qty.	Description
34	M-645020-S	4	Screw-HHFTF (M6X1.0X20) ●
35	25 237 14-S	1	Clamp-Hose, Spring (1/2) ●
36	24 326 26-S	1	Hose-Breather ●

● Obtain parts from www.kohlerplus.com

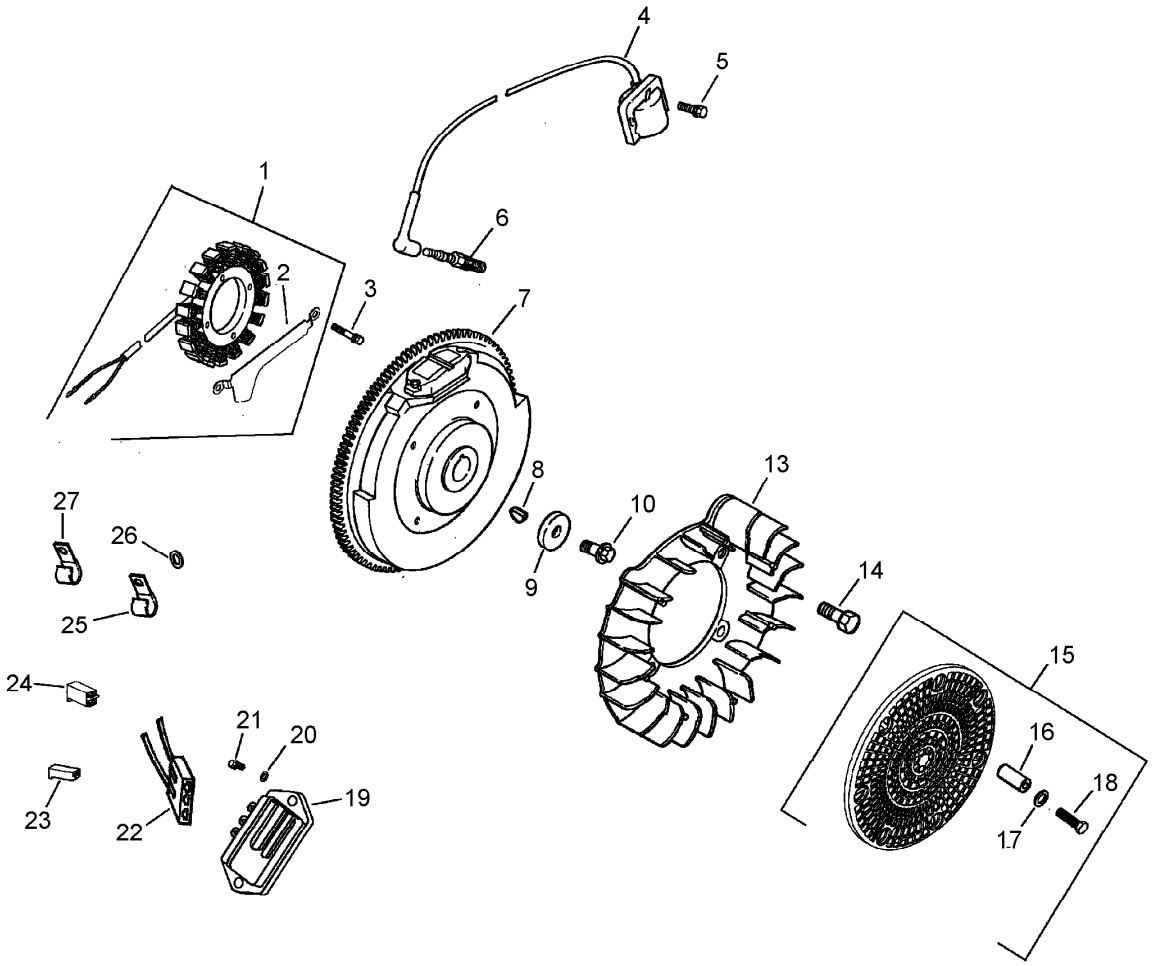

Ignition / Electrical Assembly
Kohler CH23S 76585

Ref.	Part Number	Qty.	Description
1	54 755 09-S	1	15 Amp Stator Kit (Includes 2) ■
2	24 126 71-S	1	Bracket-Wire, Stator ■
3	M-548025-S	2	Screw-Thread Forming (M5X0.8X25) ■
4	24 584 01-S	2	Module-Ignition ■
5	M-545020-S	4	Screw-Flange, Thread Forming (M5X.8X20) ■
6	25 132 12-S	2	Spark Plug (Pro Series) ■
7	24 025 01-S	1	Flywheel ■
8	X-42-15-S	1	Key (3/16 X 5/8) ■
9	12 468 03-S	1	Washer-Flat (13/32) ■
10	12 086 14-S	1	Screw-Flange (M10X1.5X45) ■
13	24 157 07-S	1	Fan ■
14	25 086 47-S	4	Bolt-Shoulder (M6X1.0X16) ■
15	54 755 15-S	1	Grass Screen Kit (Includes 16-18 & 24 113 18-S) ■
16	24 112 04-S	4	Spacer ■
17	X-25-92-S	4	Washer-Flat (.188) ■
18	M-403025-S	4	Screw-Slotted Head (M4X0.7X25) ■
19	41 403 09-S	1	Rectifier-Regulator ■
20	X-25-92-S	3	Washer-Flat (.188) ■
21	24 086 18-S	2	Screw-Phl HD (11-16X.88) ■
22	277563-S	1	Connector (1 Contact) ■
23	41 155 03-S	1	Connector ■
24	235173-S	1	Clip-Cable ■
25	X-25-63-S	1	Washer-Flat (1/4) ■
26	48 154 02-S	1	Clip-Cable ■
	24 126 37-S	1	Bracket-Strap, Ground ● ■
	25 086 91-S	2	Screw-Wsh HD Tap (8-18X.50) ● ■
	24 176 08-S	1	Harness-Wiring ● ■
	24 176 49-S	1	Harness-Wiring (Includes 18-19) ● ■
	25 454 03-S	2	Tie-Wire ● ■
	24 113 18-S	1	Decal-Screen, Grass ● ■

● Not illustrated

■ Obtain parts from www.kohlerplus.com

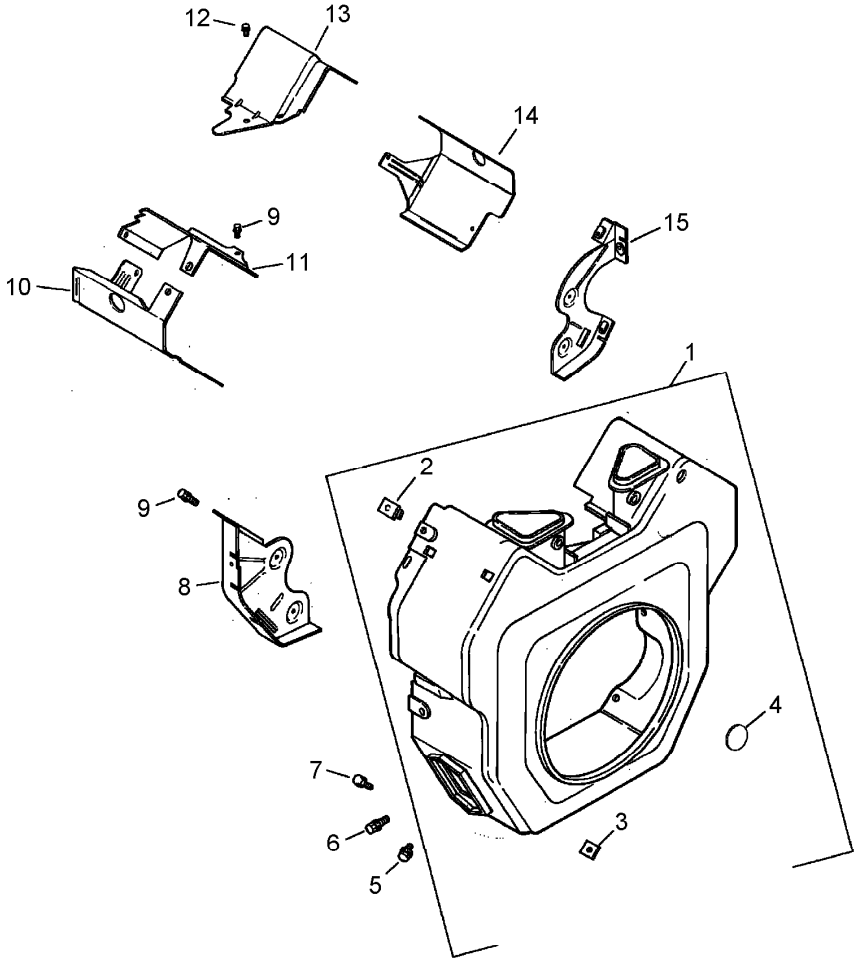

Blower Housing and Baffle Assembly
Kohler CH23S 76585

Ref.	Part Number	Qty.	Description
1	24 027 175-S	1	Blower Housing ASM (Includes 2-4) ■
2	24 100 01-S	3	Nut-Plastic ■
3	24 100 02-S	2	Nut-Plastic ■
4	25 139 16-S	1	Plug-Button (9/16) ■
5	M-551016-S	1	Screw-Hex Flange, Heavy (M5X0.8X16) ■
6	M-545016-S	3	Screw-Flange, Thread Forming (M5X0.8X16) ■
7	M-545020-S	4	Screw-Flange, Thread Forming (M5X.8X20) ■
8	24 146 16-S	1	Plate-Backing (No. 2 Side) ■
9	M-645016-S	6	Screw-Flange, Thread Forming (M6X1.0X16) ■
10	24 063 20-S	1	Baffle-Barrel, Cylinder (No. 2 Side) ■
11	24 063 17-S	1	Baffle-Valley (No. 2 Side) ■
12	M-545010-S	2	Screw-HHFTF (M5X.80X10) ■
13	24 063 59-S	1	Baffle-Valley (No. 1 Side) ■
14	24 063 58-S	1	Baffle-Barrel, Cylinder (No. 1 Side) ■
15	24 146 20-S	1	Plate-Backing (No. 1 Side) ■
	24 113 81-S	1	Decal-23 HP ● ■
	25 113 39-S	1	Decal-Laminate, Clear ● ■

● Not illustrated

■ Obtain parts from www.kohlerplus.com

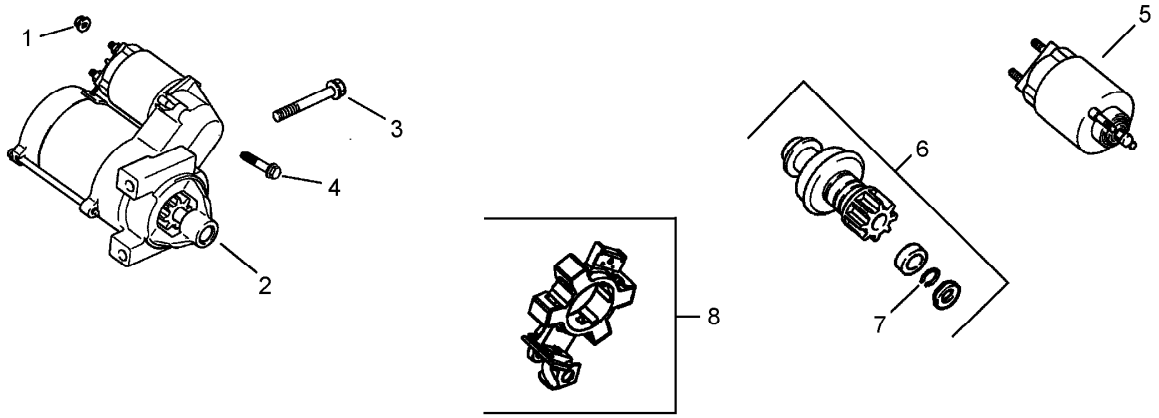

Starting System Assembly
Kohler CH23S 76585

Ref.	*Part Number*	*Qty.*	*Description*
1	M-841080-S	1	Nut-Flange (M8X1.25) ●
2	M-839080-S	2	Screw-Flg (M8X1.25X80) ●
3	25 098 09-S	1	Starter Solenoid Shift ASM (Includes 4-8) ●
4	25 086 113-S	3	Screw-Torx Head, External ●
5	25 435 05-S	1	Solenoid Kit (Includes 4) ●
6	25 755 33-S	1	Pinion Drive Kit (Includes 7) ●
7	25 141 05-S	1	Ring-Retaining ●
8	25 221 01-S	1	Brush Holder Kit ●

● Obtain parts from www.kohlerplus.com

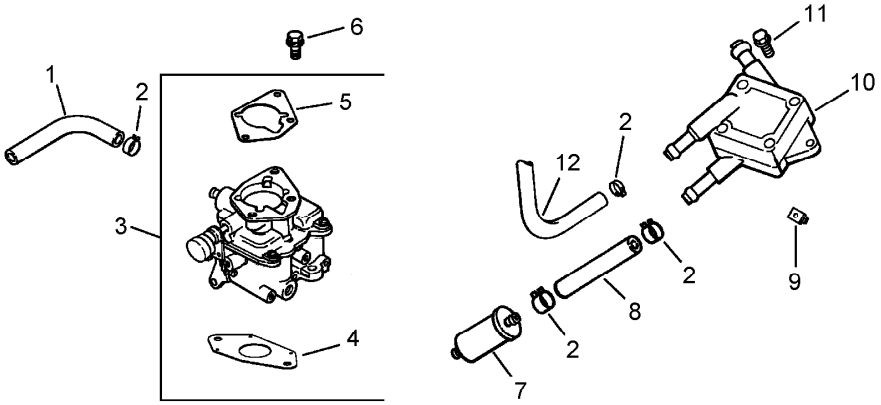

Fuel System Assembly
Kohler CH23S 76585

Ref.	*Part Number*	*Qty.*	*Description*
1	24 353 41-S	1	Line-Fuel, 8-1/2In (Pump To Carburetor) ■
2	25 237 14-S	6	Clamp-Hose, Spring (1/2) ■
3	24 853 59-S	1	Carburetor Kit (Includes 4-5) ■
4	24 041 53-S	1	Gasket-Carburetor ■
5	24 041 06-S	1	Gasket-Base, Air Cleaner ■
6	M-651025-S	2	Screw-HF (M6X1.0X25) ■
7	24 050 05-S	1	Filter-Fuel ■
8	25 353 52-S	1	Line-Fuel, 9-1/4In (Pump To Filter) ■
9	24 100 01-S	2	Nut-Plastic ■
10	24 393 16-S	1	Pump-Fuel ■
11	24 086 12-S	2	Screw-TAP (M6X1.7X18) ■
12	24 353 02-S	1	Line-Fuel, Flexible (15.5) ■
	24 518 24-S	1	Lead-Ground ● ■
	24 757 01-S	1	Solenoid Repair Kit ● ■
	24 757 02-S	1	Float Repair Kit ● ■
	24 757 03-S	1	Carburetor Repair Kit ● ■
	24 757 07-S	1	Choke Repair Kit ● ■
	24 755 125-S	1	High Altitude Kit ● ■

● Not illustrated

■ Obtain parts from www.kohlerplus.com

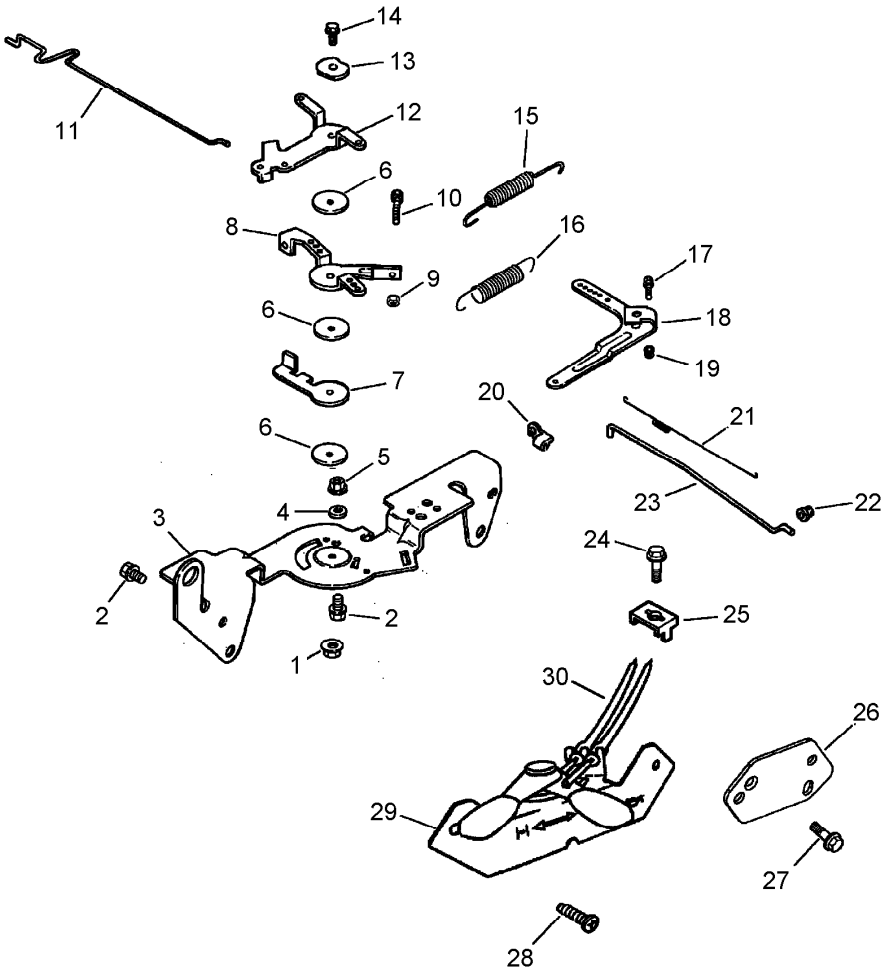

Engine Control Assembly
Kohler CH23S 76585

Ref.	Part Number	Qty.	Description
1	M-547050-S	1	Nut-Lock (M5X.8) ■
2	M-645016-S	4	Screw-Flange, Thread Forming (M6X1.0X16) ■
3	24 126 56-S	1	Bracket-Control ■
4	X-20-1-S	1	Washer-Lock (.25) ■
5	M-541050-S	1	Nut-HF (M5X0.8) ■
6	24 468 01-S	3	Washer-Flat (5.5Mm) ■
7	24 090 07-S	1	Lever-Actuator, Throttle ■
8	24 090 13-S	1	Lever-Control, Throttle ■
9	M-446030-S	1	Nut (M4X0.7) ■
10	M-401030-S	1	Screw (M4X0.7X30) ■
11	24 079 21-S	1	Linkage-Choke ■
12	24 090 05-S	1	Lever-Choke ■
13	41 468 03-S	1	Washer-Spring (1/4) ■
14	M-545020-S	1	Screw-Flange, Thread Forming (M5X.8X20) ■
15	24 089 51-S	1	Spring-Limiter, Throttle ■
16	24 089 48-S	1	Spring-Governor ■
17	24 211 03-S	1	Bolt-Sq Neck, Rd HD (M6X1.0X25) ■
18	24 090 33-S	1	Lever-Governor ■
19	M-641060-S	1	Nut-Flange (M6X1.0) ■
20	25 158 11-S	1	Bushing-Retaining, Linkage ■
21	24 089 01-S	1	Spring-Linkage ■
22	25 158 08-S	1	Bushing-Linkage, Throttle ■
23	24 079 01-S	1	Linkage-Throttle ■
24	24 086 43-S	1	Screw-Lbd, Thd Frm (M5X0.8X16) ■
25	12 237 01-S	1	Clamp-Cable ■
26	24 126 99-S	1	Bracket-Support, Cable ■
27	M-545010-S	2	Screw-HHFTF (M5X.80X10) ■
28	24 086 06-S	2	Screw-PPH (11-16X3/4) ■
29	24 225 02-S	1	Control Cable ASM (Includes 29) ■
30	24 159 01-S	1	Cable-Speed, Engine ■
	24 113 92-S	1	Decal-Panel, Control ● ■

● Not illustrated

■ Obtain parts from www.kohlerplus.com

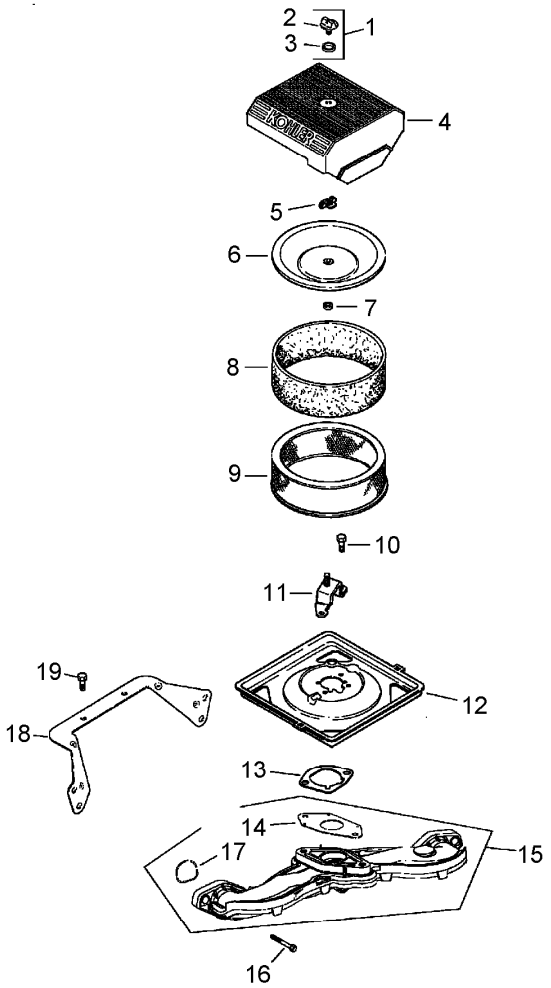

Air Intake / Filtration Assembly
Kohler CH23S 76585

Ref.	Part Number	Qty.	Description
1	54 755 01-S	1	Knob Kit (Includes 2, 3) ■
2	25 341 03-S	1	Knob-Cover ■
3	24 153 20-S	1	O-Ring ■
4	24 096 67-S	1	Cover-Cleaner, Air ■
5	12 100 01-S	1	Nut-Wing ■
6	24 096 01-S	1	Cover-Air Cleaner, Inner ■
7	230046-S	1	Seal ■
8	24 083 05-S	1	Pre-Cleaner ■
9	24 083 03-S	1	Element-Filter, Air ■
10	M-645016-S	3	Screw-Flange, Thread Forming (M6X1.0X16) ■
11	24 126 141-S	1	Bracket-Base, Air Cleaner ■
12	24 094 37-S	1	Base-Cleaner, Air ■
13	24 041 06-S	1	Gasket-Base, Air Cleaner ■
14	24 041 53-S	1	Gasket-Carburetor ■
15	24 164 54-S	1	Manifold-Intake (Includes 14, 17) ■
16	M-651040-S	4	Screw-Flange (M6X1.0X40) ■
17	24 153 27-S	2	O-Ring ■
18	24 126 130-S	1	Bracket-Base, Air Cleaner ■
19	M-545010-S	2	Screw-HHFTF (M5X.80X10) ■
	28 112 01-S	1	Spacer ● ■
	M-641060-S	1	Nut-Flange (M6X1.0) ● ■

● Not illustrated

■ Obtain parts from www.kohlerplus.com

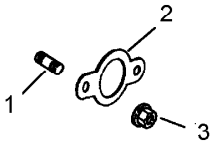

Exhaust Assembly
Kohler CH23S 76585

Ref.	Part Number	Qty.	Description
1	25 072 04-S	4	Stud (M8X1.25X33) ■
2	24 041 49-S	2	Gasket-Exhaust ■
3	M-841080-S	4	Nut-Flange (M8X1.25) ■
	25 454 01-S	1	Tie-Wire ● ■
	24 782 27	1	Miniblock ASM ● ■
	24 755 113-S	1	Gasket Set ● ■

● Not illustrated

■ Obtain parts from www.kohlerplus.com

Attachments and Accessories

For 09200 ProCore 648 Aerator

Product Name	Model/Part
Windrower Kit	09220
Needle Tine Head Kit	09221
Mini Tine Head Kit	09222
3 Tine, 3/4 Inch Mount, Head Kit	09223
4 Tine, 3/4 Inch Mount, Head Kit	09224
Tire Scraper Kit	09225
3 Tine, 7/8 Inch Mount, Head Kit	09226
Mini Tine, 1 X 6, Head Kit	09233
Rear Roller Kit	09234
Red Gas Cap	107-2173
Yellow Hydraulic Fluid Cap (Tethered)	107-2174
Premium Engine Oil, 10w30 (55 Gallon Drum)	108-1179
Premium Engine Oil, 10w30 (5 Gallon Pail)	108-1180
Premium Transmission/Hydraulic Tractor Fluid (55 Gallon Drum)	108-1183
Premium Transmission/Hydraulic Tractor Fluid (5 Gallon Pail)	108-1184
Premium All Purpose Grease (Tube)	108-1190
60 LB Weight	99-6166-01

Notes:

Notes:

Notes:

TORO®

Count on it.