Form No. 3352-545 Rev B

TORO®

Count on it.

Parts Catalog

# ProCore® 648 Aerator

**Model No. 09200—Serial No. 250000001 and Up**

Register at www.Toro.com.
Original Instructions (EN)

*3352-545* B

# Ordering Replacement Parts

To order replacement parts, please supply the part number, the quantity, and the description of each part desired.

### Understanding Reference Numbers

Each identified part in an illustration has a reference number. The reference number for a part also appears in the parts list, along with other information about the part.

This catalog uses two special reference number formats, one to indicate parts in a service assembly and another to indicate the quantity of a given part in an illustration.

### Service Assembly Reference Numbers

Parts in service assemblies have reference numbers in the form a:b. The a represents the reference number of the entire service assembly and the b represents a sequential number unique to each part within the service assembly.

For example, a wheel assembly might be identified by reference number 6, the tire by 6:1, the valve by 6:2, and the wheel by 6:3. When you order the assembly identified by reference number 6, you receive all parts identified by reference numbers 6:1,6:2, and 6:3. However, you may also order any part individually. Reference numbers of this type appear in illustration and in parts lists.

### Reference Numbers Indicating Quantity

In an illustration, if a reference number indicates more than one part, the reference number has the form nX y. The n represents the quantity of the part, the X is the multiplication symbol, and the y represents the reference number.

For example, in an illustration, the reference number 2X 37 means that two of the parts identified by reference number 37 are indicated.

# Contents


Control Bail Assembly . . . 4
Front Handle Assembly . . . 5
Front Fork Assembly . . . 6
Fuel Tank Assembly . . . 7
Console Assembly . . . 8
Console Electrical Assembly . . . 9
Line Marker Assembly . . . 10
Engine and Muffler Assembly . . . 11
Rear Hood and Muffler Shield Assembly . . . 12
Shield Assembly No. 107-7546 . . . 13
Jackshaft Hood Assembly . . . 14
Primary Belt Drive Assembly . . . 15
Secondary Belt Drive Assembly . . . 16
Hydrostat Control Assembly . . . 17
Hydrostat Pump Assembly . . . 18
Hydrostat and Pump Assembly No. 105-1005 . . . 19
Lift System Assembly . . . 20
Control Manifold Assembly No. 106-8802 . . . 21
Wheel and Motor Assembly . . . 22
Brake Latch Assembly . . . 23
Hydraulic Tank Assembly . . . 24
Hydraulic Fitting Assembly . . . 25
Hydraulic Line and Hose Assembly . . . 26
H-Frame Assembly . . . 27
Coring Head Crank No. 1 and 2 Assembly . . . 28
Coring Head Crank No. 3 and 4 Assembly . . . 29
Coring Head Crank No. 5 and 6 Assembly . . . 30
Coring Head Roto Link Assembly . . . 31
Coring Head Turf Guard Assembly . . . 32
Depth Control Assembly . . . 33
Depth Actuator Assembly . . . 34
Needle Tine Holder Model No. 09221 (Optional) . . . 35
Mini Tine Holder Model No. 09222 (Optional) . . . 36
Three Tine, 3/4in Holder Model No. 09223 (Optional) . . . 37
Four Tine, 3/4in Holder Model No. 09224 (Optional) . . . 38
Three Tine 7/8in Tine Holder Model No. 09226 (Optional) . . . 39
Tire Scraper Model No. 09225 (Optional) . . . 40
Crankshaft Assembly Kohler CH23S 76585 . . . 41
Crankcase Assembly Kohler CH23S 76585 . . . 42
Oil Pan and Lubrication Assembly Kohler CH23S-76585 . . . 43
Head / Valve / Breather Assembly Kohler CH23S 76585 . . . 44
Ignition / Electrical Assembly Kohler CH23S 76585 . . . 46
Blower Housing and Baffle Assembly Kohler CH23S 76585 . . . 47
Starting System Assembly Kohler CH23S 76585 . . . 48
Fuel System Assembly Kohler CH23S 76585 . . . 49
Engine Control Assembly Kohler CH23S 76585 . . . 50
Air Intake / Filtration Assembly Kohler CH23S 76585 . . . 51
Exhaust Assembly Kohler CH23S 76585 . . . 52
Attachments and Accessories . . . 53



**© 2019—The Toro® Company**


**8111 Lyndale Avenue South**
**Bloomington, MN 55420**





**Contact us at www.Toro.com.**
**Printed in the USA.**


**All Rights Reserved**

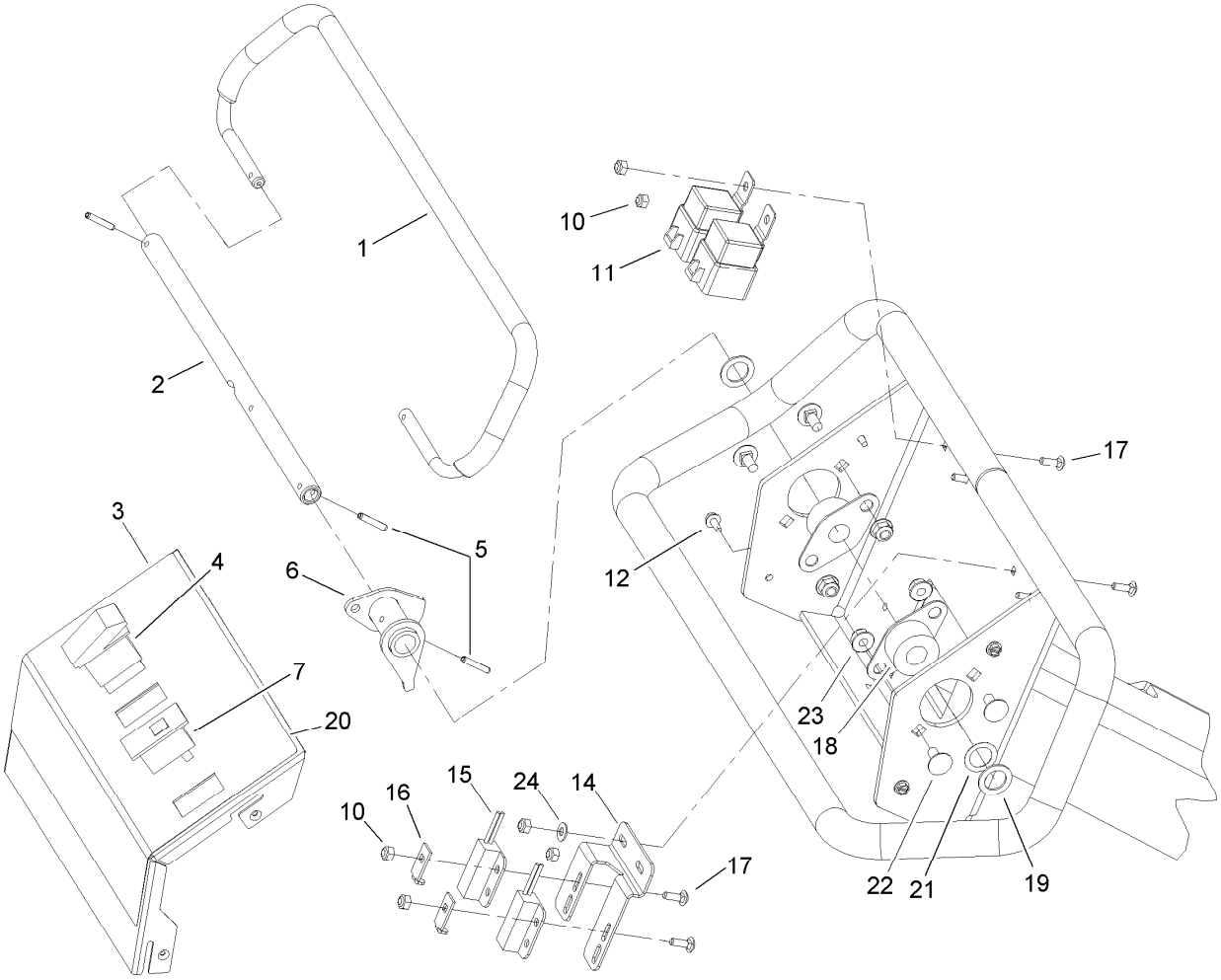


# Control Bail Assembly

| Ref. | Part Number | Qty. | Description |
|---|---|---|---|
| 1 | 106-8948 | 1 | Handle-Traction |
| 2 | 107-3350 | 1 | Shaft-Pivot, Bail V |
| 3 | 105-1183-03 | 1 | Cover-Handle, Control |
| 4 | 106-8921 | 1 | Switch-Rocker, Off-On |
| 5 | 32121-45 | 3 | Pin-Spring |
| 6 | 107-3351 | 1 | Bail Lever ASM |
| 7 | 99-7410 | 1 | Indicator-Light, Low-Oil Pressure |
| 10 | 3296-2 | 6 | Nut-Lock, NI |
| 11 | 99-7430 | 2 | Relay-Mini |
| 12 | 32104-60 | 4 | Screw-HWH |
| 14 | 107-3361 | 1 | Mount-Switch |
| 15 | 100-1270 | 2 | Switch-Proximity |
| 16 | 100-4872 | 2 | Plate-Switch, Neutral |
| 17 | 3229-34 | 6 | Screw-CARR |
| 18 | 256-236 | 2 | Bearing-Mount, Flange |
| 19 | 3256-69 | 2 | Washer-Flat |
| 20 | 106-8855 | 1 | Decal-Console, Handle |
| 21 | 108-2100 | 1 | Washer-Spring, Curved |
| 22 | 3230-18 | 4 | Screw-CARR |
| 23 | 104-8300 | 4 | Nut-HF, NI |
| 24 | 3256-14 | 2 | Washer-Flat |

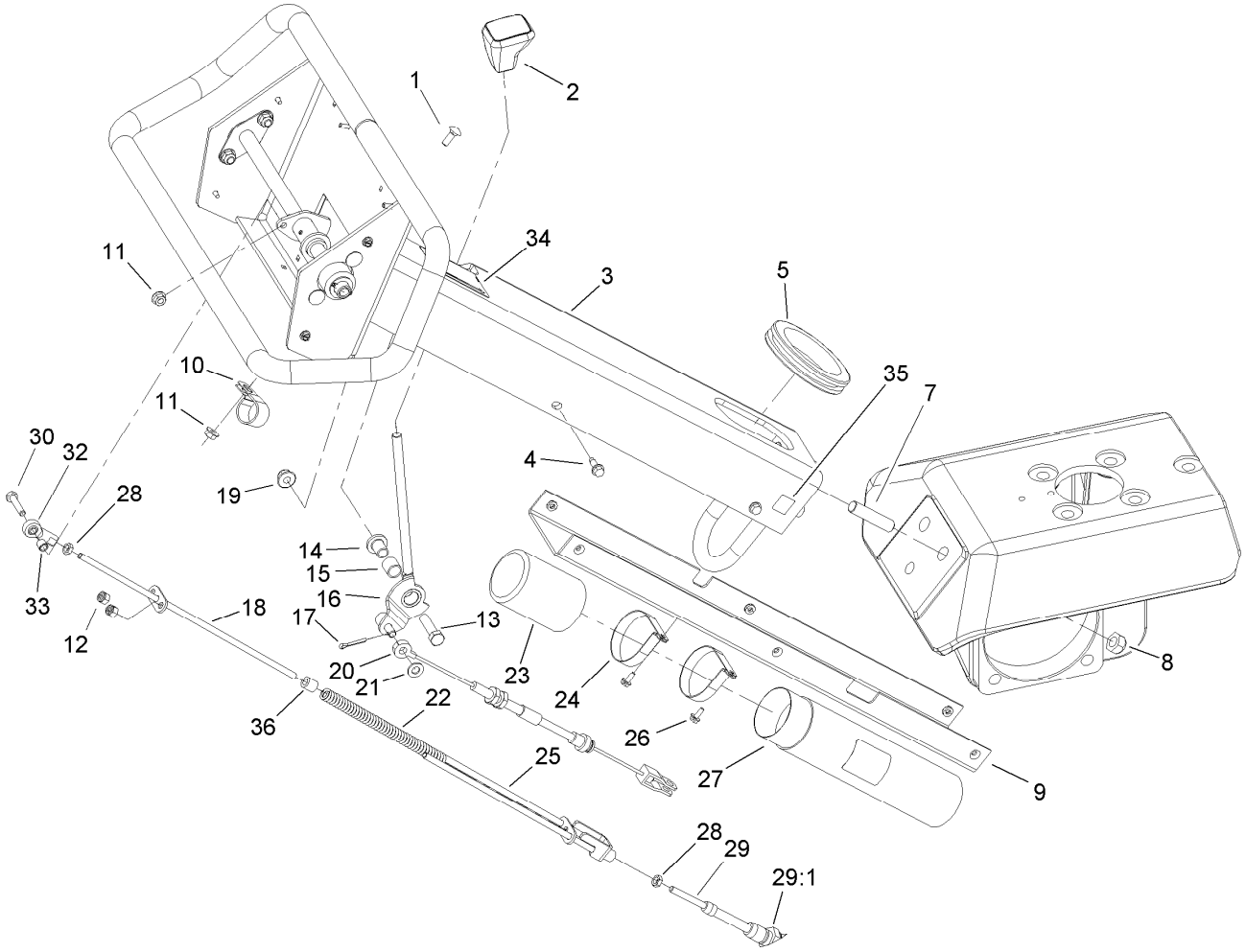


# Front Handle Assembly

| Ref. | Part Number | Qty. | Description |
|---|---|---|---|
| 1 | 3229-1 | 1 | Bolt-CARR |
| 2 | 65-8970 | 1 | Knob-Shift |
| 3 | 105-1194-01 | 1 | Control Handle ASM |
| 4 | 32144-44 | 6 | Screw-HWH, Thread Roll |
| 5 | 240-8 | 1 | Grommet-Rubber |
| 7 | 80-8680 | 3 | Stud |
| 8 | 3296-19 | 3 | Nut-Hex |
| 9 | 107-3363-03 | 1 | Cover-Lower, Handle |
| 10 | 2412-39 | 1 | Clamp-R |
| 11 | 32128-33 | 2 | Nut-HF |
| 12 | 3296-3 | 2 | Nut-Lock |
| 13 | 323-8 | 1 | Screw-HH |
| 14 | 80-7200 | 1 | Spacer-Brake |
| 15 | 256-206 | 1 | Bushing |
| 16 | 86-8420 | 1 | Lever-Brake |
| 17 | 3272-10 | 1 | Pin-Cotter |
| 18 | 107-3354 | 1 | Override Rod ASM |
| 19 | 104-8301 | 1 | Nut-HF, NI |

| Ref. | Part Number | Qty. | Description |
|---|---|---|---|
| 20 | 106-8896 | 1 | Cable-Latch, Parking |
| 21 | 3256-23 | 1 | Washer-Plain |
| 22 | 107-3373 | 1 | Spring-Compression |
| 23 | 104-7048 | 1 | Cap-Housing |
| 24 | 2412-120 | 2 | Clamp-R |
| 25 | 107-3360 | 1 | Spring Retainer ASM |
| 26 | 32104-60 | 2 | Screw-HWH |
| 27 | 104-7050 | 1 | Tube-Manual |
| 28 | 3220-1 | 2 | Nut-Jam |
| 29 | 80-7220 | 1 | Cable-Control, Stroke |
| 29:1 | 3220-6 | 4 | Nut-Jam |
| 30 | 321-8 | 1 | Screw-HH |
| 32 | 2411-41 | 1 | Rod End-Ball Joint |
| 33 | 99-3545 | 1 | Spacer |
| 34 | 93-9363 | 1 | Decal-Brake, Parking |
| 35 | 93-9084 | 3 | Decal-Point, Lift |
| 36 | 22-7810 | 1 | Spacer |

● Not illustrated

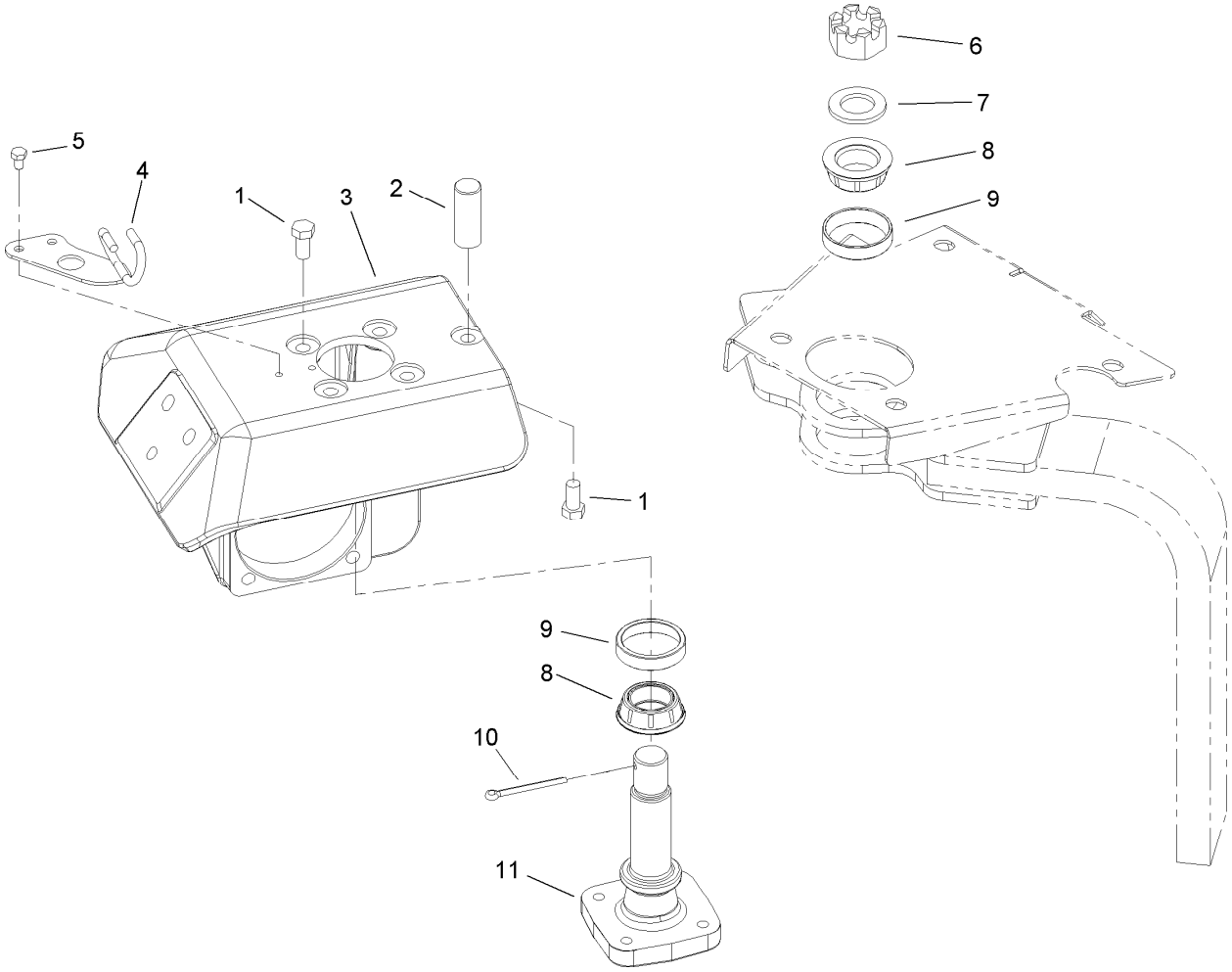


# Front Fork Assembly

| *Ref.* | *Part Number* | *Qty.* | *Description* |
|---|---|---|---|
| 1 | 325-4 | 5 | Screw-HH |
| 2 | 106-8939 | 1 | Stop-Steering |
| 3 | 108-1252-01 | 1 | Arm-Steering |
| 4 | 106-8937 | 1 | Cable Guide ASM |
| 5 | 322-1 | 2 | Screw-HH |
| 6 | 32136-9 | 1 | Nut-Hex, Slotted |
| 7 | 107-7597 | 1 | Washer-Plain |
| 8 | 107-7589 | 2 | Cone-Bearing (W/ Seal) |
| 9 | 107-7590 | 2 | Cup-Bearing |
| 10 | 3272-37 | 1 | Pin-Cotter |
| 11 | 107-7595-03 | 1 | Spindle-Steer |

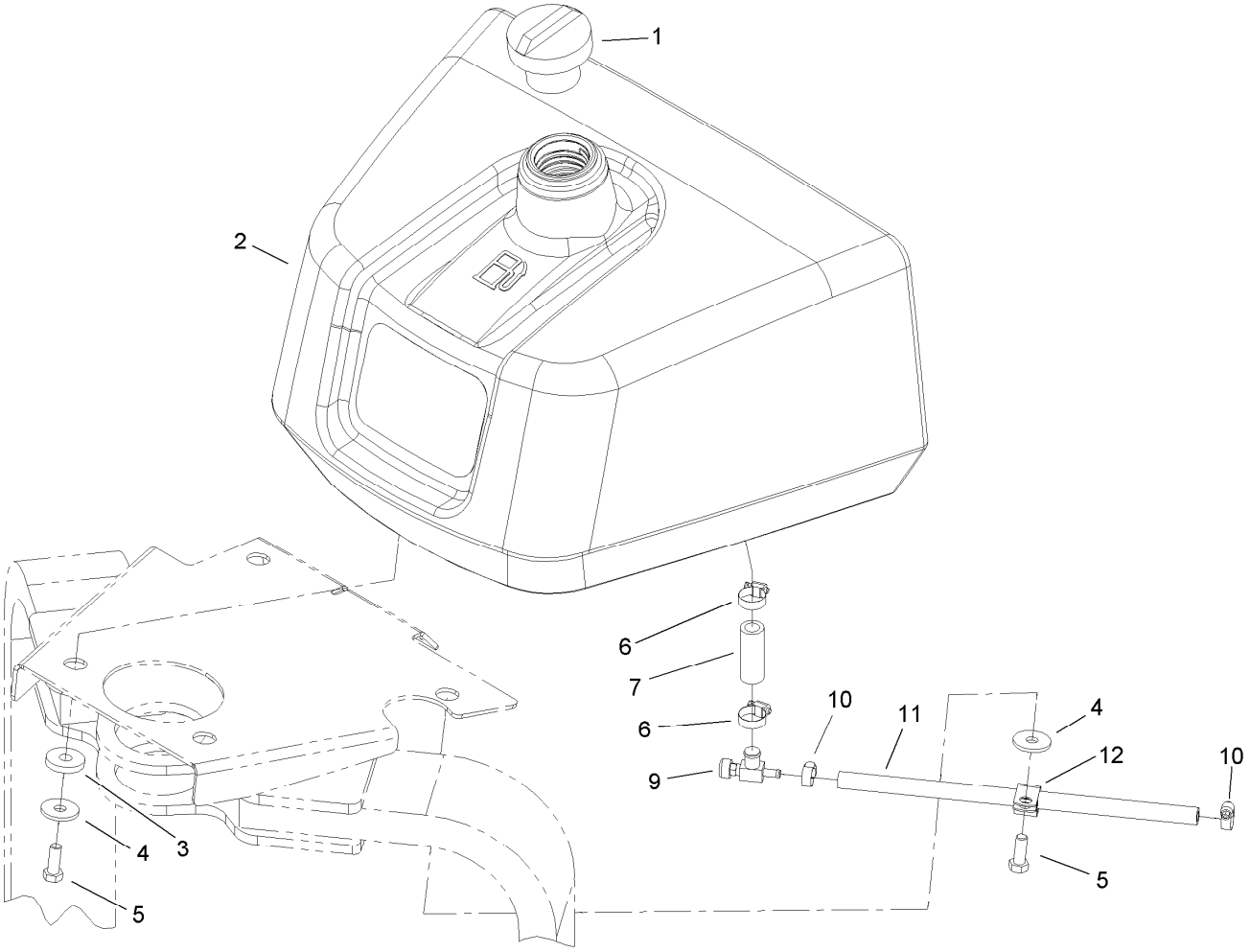


# Fuel Tank Assembly

| *Ref.* | *Part Number* | *Qty.* | *Description* |
|---|---|---|---|
| 1 | 93-7170 | 1 | Cap-Fuel |
| 2 | 105-8266 | 1 | Tank-Fuel |
| 3 | 240-11 | 4 | Bushing-Flange |
| 4 | 63-8410 | 4 | Washer |
| 5 | 323-6 | 4 | Screw-HH |
| 6 | 2412-36 | 2 | Clamp-Hose |
| 7 | 56-2230 | 1 | Hose-Fuel |
| 9 | 83-1390 | 1 | Valve-Shut-Off, Fuel |
| 10 | 2412-108 | 2 | Clamp-Worm |
| 11 | 19-3250 | 1 | Hose-Fuel |
| 12 | 2412-41 | 1 | Clamp-R |

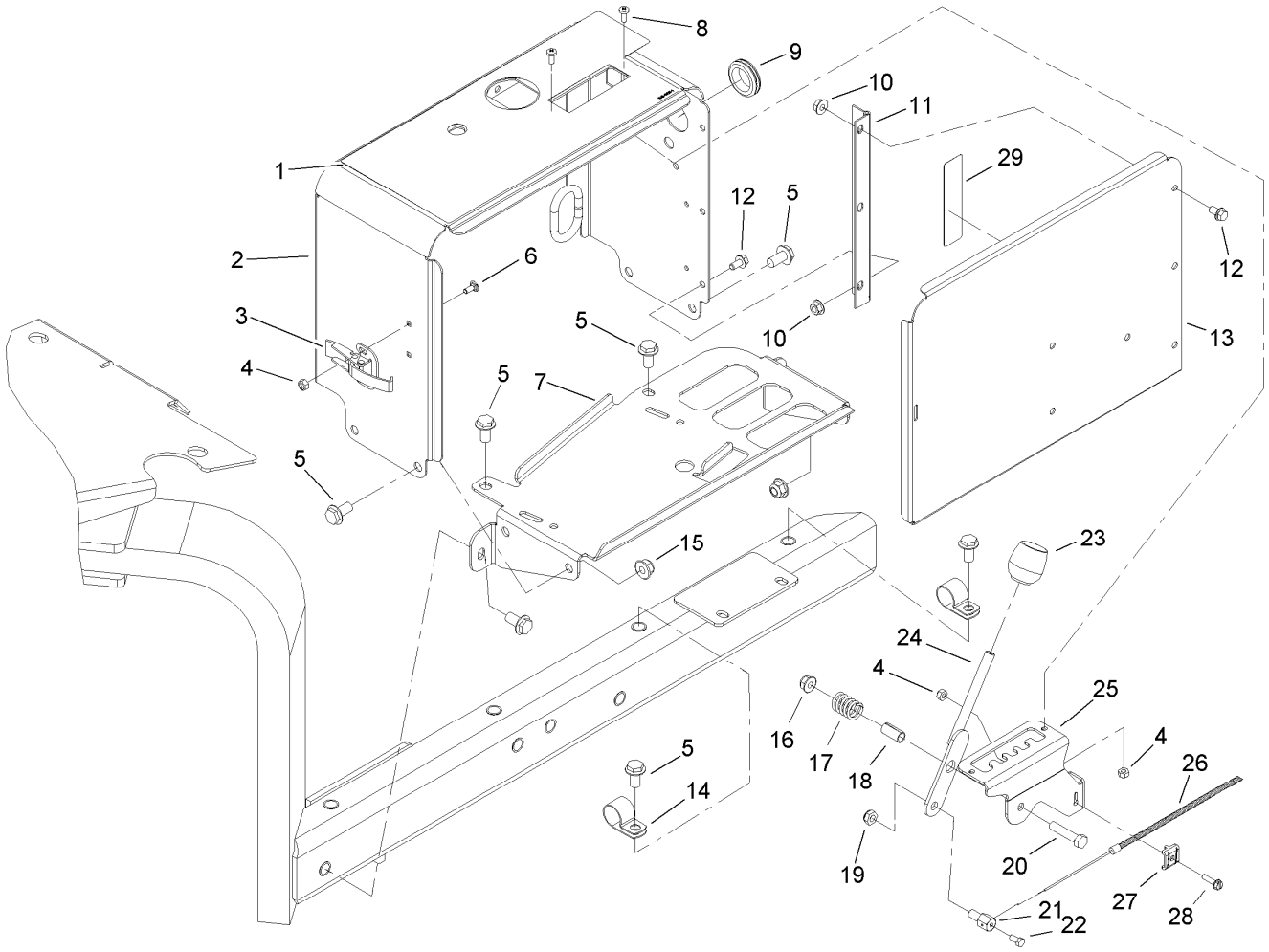


# Console Assembly

| Ref. | Part Number | Qty. | Description |
|---|---|---|---|
| 1 | 106-8854 | 1 | Decal-Console, Main |
| 2 | 105-1175-01 | 1 | Console |
| 3 | 249-21 | 1 | Clamp-Slotted |
| 4 | 3296-2 | 6 | Nut-Lock, NI |
| 5 | 3234-1 | 10 | Screw-HHF |
| 6 | 104-1450 | 2 | Bolt-CARR |
| 7 | 105-1182-01 | 1 | Base-Console |
| 8 | 3250-12 | 3 | Screw-PPH |
| 9 | 240-5 | 1 | Grommet |
| 10 | 32128-33 | 6 | Nut-HF |
| 11 | 106-8908 | 1 | Hinge-Console |
| 12 | 3234-13 | 6 | Screw-HHF |
| 13 | 105-1171-01 | 1 | Cover-Console |
| 14 | 2412-41 | 2 | Clamp-R |
| 15 | 104-8301 | 4 | Nut-HF, NI |
| 16 | 104-8300 | 1 | Nut-HF, NI |
| 17 | 20-6110 | 1 | Spring-Compression |
| 18 | 40-8130 | 1 | Spacer |
| 19 | 3296-20 | 1 | Nut-Lock, NI |
| 20 | 322-7 | 1 | Screw-HH |
| 21 | 98-9311 | 1 | Swivel-Throttle |
| 22 | 25-8640 | 1 | Screw-HH |
| 23 | 233-37 | 1 | Knob |
| 24 | 105-1167 | 1 | Spacing Lever ASM |
| 25 | 105-1166-03 | 1 | Bracket-Lever, Spacer |
| 26 | 105-1062 | 1 | Cable-Control, Spacing |
| 27 | 81-1690 | 1 | Clamp-Cable |
| 28 | 32105-13 | 1 | Screw-HWH |
| 29 | 107-7555 | 1 | Decal-Block, Fuse |

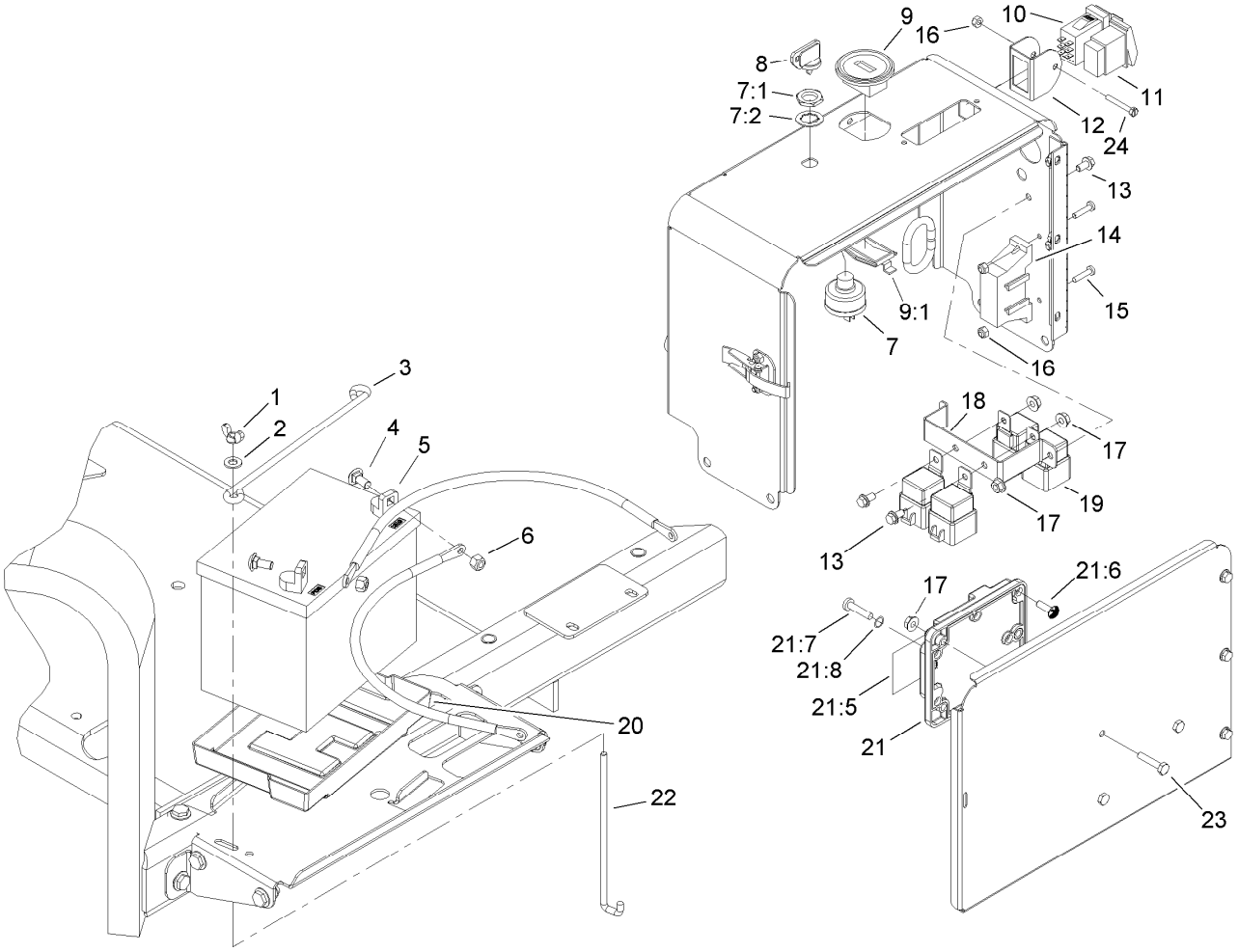


# Console Electrical Assembly

| Ref. | Part Number | Qty. | Description |
|---|---|---|---|
| 1 | 32103-22 | 2 | Nut-Wing |
| 2 | 3256-23 | 2 | Washer-Plain |
| 3 | 100-6434 | 1 | Rod-Hold Down, Battery |
| 4 | 3230-1 | 2 | Bolt-CARR |
| 5 | 104-8162 | 1 | Battery |
| 6 | 104-8300 | 2 | Nut-HF, NI |
| 7 | 83-0020 | 1 | Switch-Ignition |
| 7:1 | 218-461 | 1 | Nut-HH |
| 7:2 | 3254-5 | 1 | Washer-Lock |
| 8 | 63-8360 | 2 | Key-Ignition |
| 9 | 104-7427 | 1 | Inductive Hourmeter ASM |
| 9:1 | 104-4234 | 1 | Clip-Mounting |
| 10 | 106-8920 | 1 | Switch-Paddle, On-None-On |
| 11 | 106-2027 | 1 | Switch-Intermittent |
| 12 | 105-1158 | 1 | Guard-Switch |
| 13 | 3234-13 | 3 | Screw-HHF |
| 14 | 106-8823 | 1 | Harness-Electric, Main |

| Ref. | Part Number | Qty. | Description |
|---|---|---|---|
| 14:6 | 218-578 | 2 | Fuse-Blade, 10 Amp ● |
| 14:7 | 94-6710 | 1 | Fuse-2 Amp ● |
| 14:9 | 109101 | 1 | Fuse-Blade, 20 Amp ● |
| 14:10 | 100-4918 | 4 | Diode ● |
| 15 | 3250-27 | 2 | Screw-PPH |
| 16 | 3296-2 | 3 | Nut-Lock, NI |
| 17 | 32128-33 | 6 | Nut-HF |
| 18 | 107-7530-01 | 1 | Bracket-Relay |
| 19 | 99-7430 | 4 | Relay-Mini |
| 20 | 106948 | 1 | Tray-Battery |
| 21 | 106-8831 | 1 | Module-Control, Aerator |
| 21:5 | 106-8835 | 1 | Decal-Module, Aerator |
| 21:6 | | 7 | Screw-PPH ■ |
| 21:7 | | 2 | Screw-PPH ■ |
| 21:8 | | 2 | Seal-Dust ■ |
| 22 | 100-6435 | 2 | Post-Battery |
| 23 | 321-8 | 3 | Screw-HH |
| 24 | 32105-1 | 1 | Screw-SHH |

● Not illustrated

■ Not serviced separately

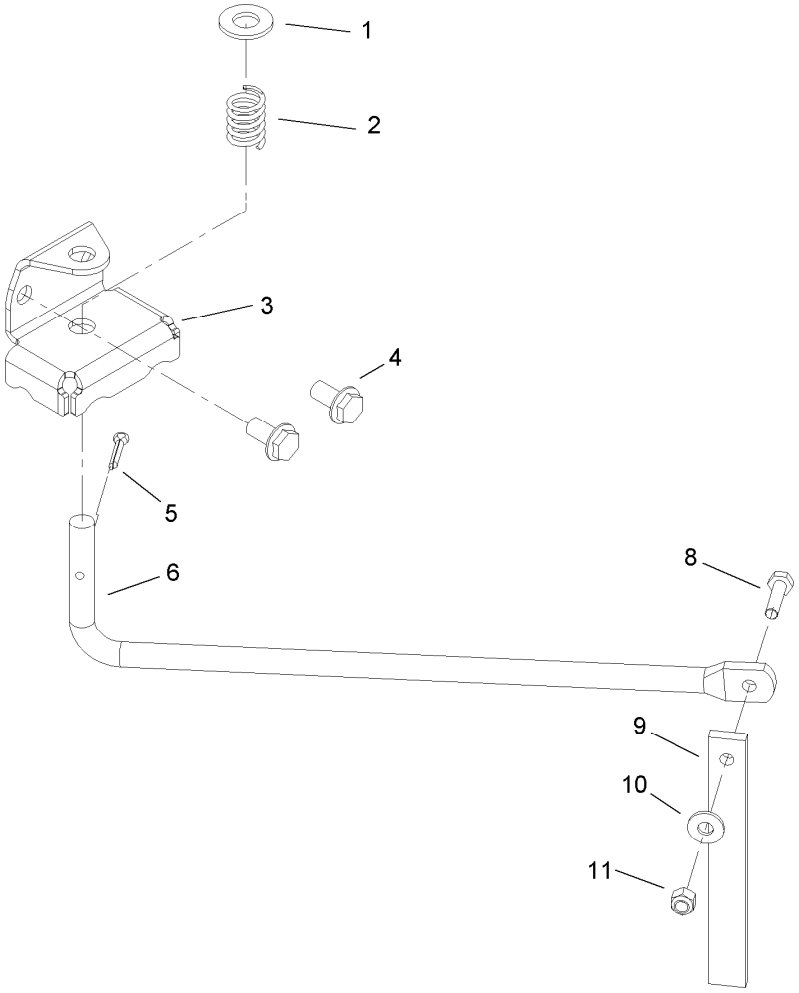


# Line Marker Assembly

| *Ref.* | *Part Number* | *Qty.* | *Description* |
|---|---|---|---|
| 1 | 3256-26 | 2 | Washer-Flat |
| 2 | 20-6110 | 2 | Spring-Compression |
| 3 | 105-1178-01 | 2 | Bracket-Marker |
| 4 | 3234-1 | 4 | Screw-HHF |
| 5 | 3272-31 | 2 | Pin-Cotter |
| 6 | 105-1179 | 2 | Rod-Marker |
| 8 | 321-6 | 2 | Screw-HH |
| 9 | 59-9460 | 2 | Guide |
| 10 | 3256-2 | 2 | Washer-Flat |
| 11 | 3296-42 | 2 | Nut-Lock, NI |

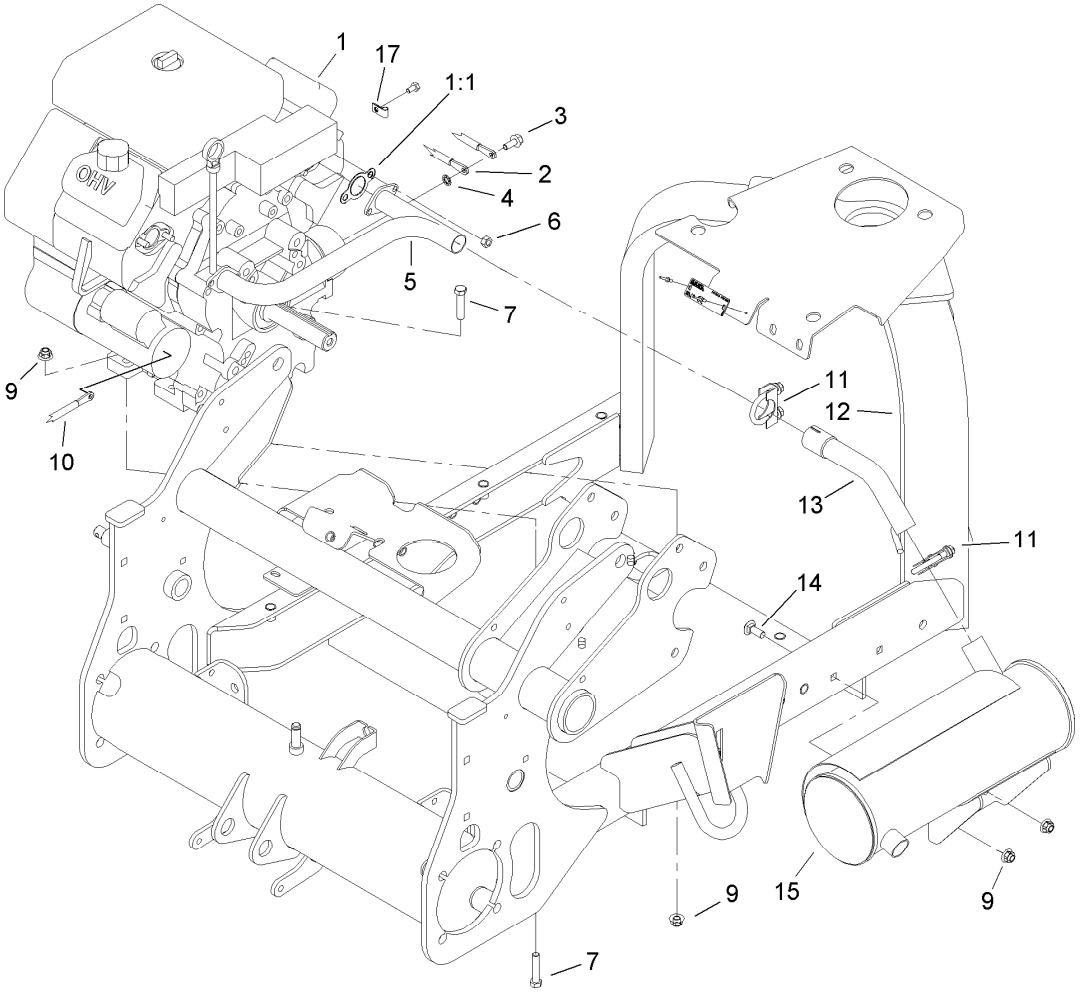


# Engine and Muffler Assembly

| Ref. | Part Number | Qty. | Description |
|---|---|---|---|
| 1 | 106-8801 | 1 | Engine-Kohler |
| 1:1 | | 2 | Gasket-Exhaust ● |
| 2 | 106-8946 | 1 | Cable-Battery, Negative |
| 3 | 33104-020 | 1 | Screw-HHF |
| 4 | 3254-2 | 1 | Washer-Lock, Internal |
| 5 | 106-8858 | 1 | Manifold-Exhaust |
| 6 | 33014-00 | 4 | Nut-Hex |
| 7 | 323-9 | 4 | Screw-HH |
| 9 | 104-8301 | 6 | Nut-HF, NI |
| 10 | 106-8945 | 1 | Cable-Battery, Positive |
| 11 | 104-4090 | 2 | Clamp-Muffler |
| 12 | 106-8910 | 1 | Front Frame ASM |
| 13 | 106-8857 | 1 | Elbow-Exhaust |
| 14 | 3231-2 | 2 | Bolt-CARR |
| 15 | 106-8859 | 1 | Muffler-Exhaust |
| 17 | 2412-72 | 1 | Clip-Closed, Insulated |

● Not serviced separately

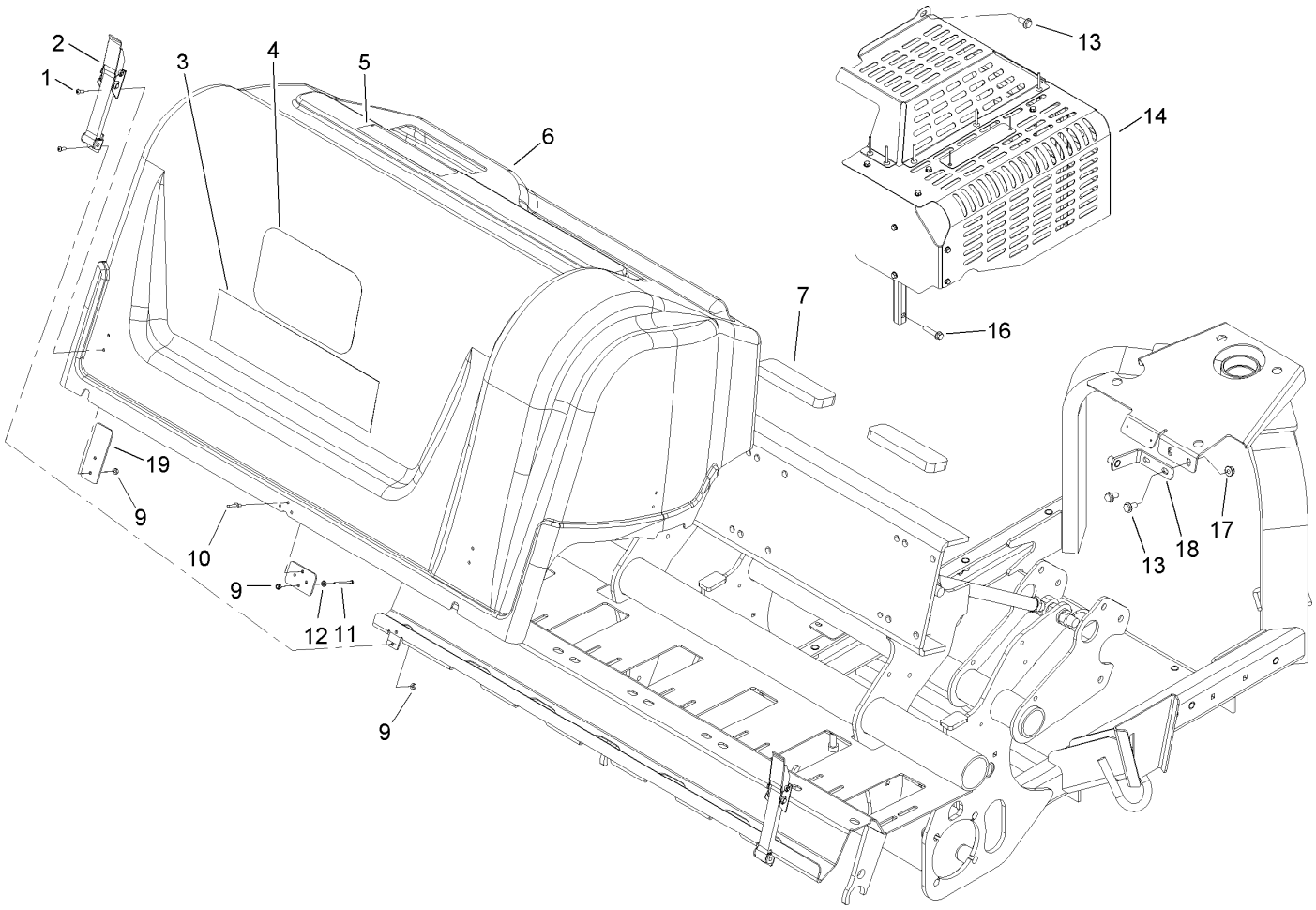


# Rear Hood and Muffler Shield Assembly

| *Ref.* | *Part Number* | *Qty.* | *Description* |
|---|---|---|---|
| 1 | 3274-39 | 16 | Screw-HSBH |
| 2 | 69-3010 | 4 | Latch |
| 3 | 106-8852 | 1 | Decal |
| 4 | 67-7310 | 1 | Decal |
| 5 | 106-8856 | 1 | Decal-Depth, Tine |
| 6 | 106-8902 | 1 | Hood-Rear |
| 7 | 107-7507 | 3 | Pad-Foam |
| 9 | 3296-2 | 17 | Nut-Lock, NI |
| 10 | 3269-22 | 3 | Rivet-Pop |
| 11 | 32105-20 | 1 | Screw-HH |
| 12 | 3217-26 | 1 | Nut-Hex |
| 13 | 3234-1 | 3 | Screw-HHF |
| 14 | 107-7546 | 1 | Shield ASM |
| 16 | 3234-18 | 2 | Screw-HHF |
| 17 | 104-8301 | 2 | Nut-HF, NI |
| 18 | 107-7545 | 1 | Bracket ASM |
| 19 | 107-3390 | 4 | Plate-Reinforcement |

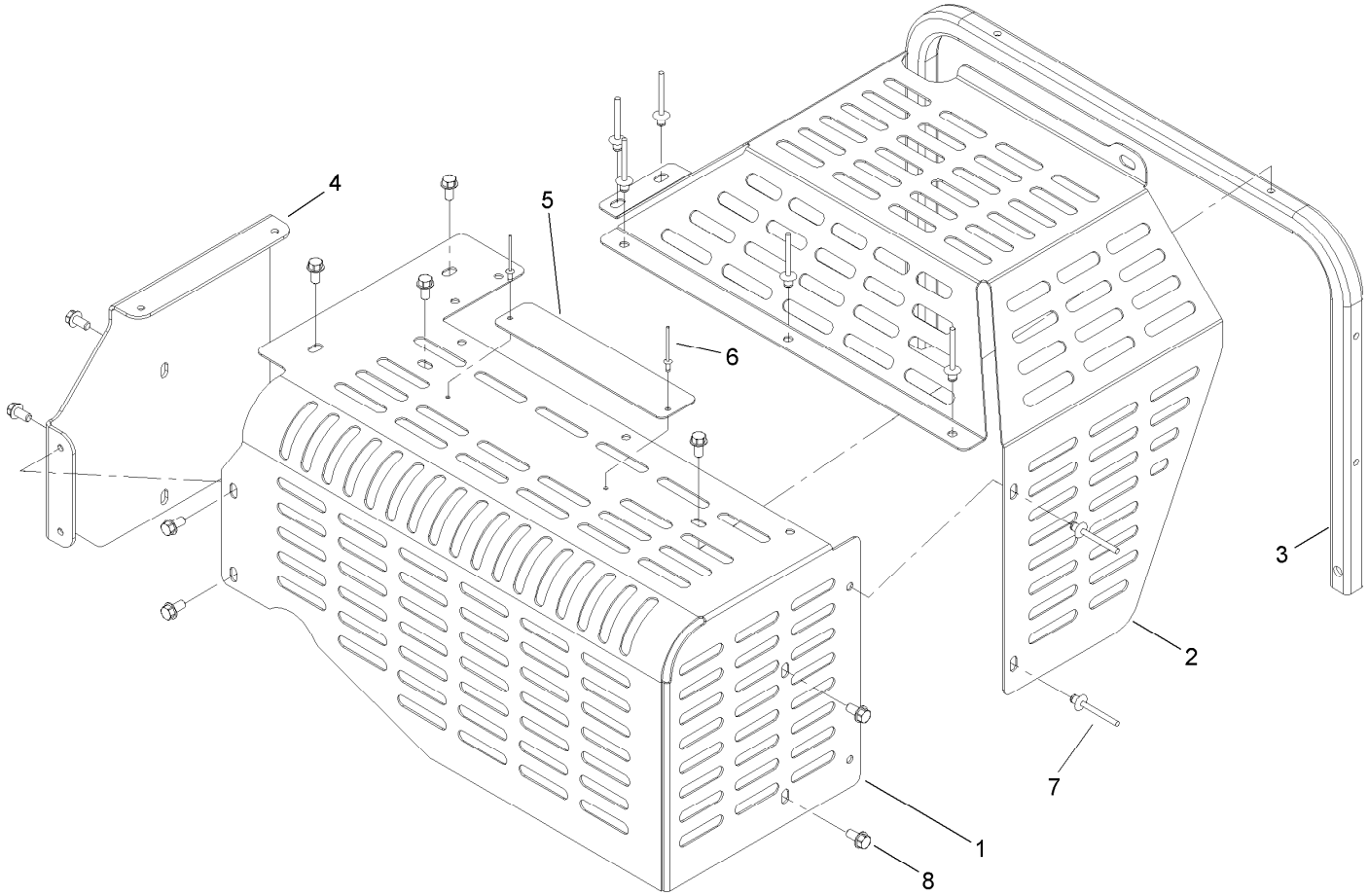


# Shield Assembly No. 107-7546

| *Ref.* | *Part Number* | *Qty.* | *Description* |
|---|---|---|---|
| 1 | 106-8903-01 | 1 | Shield-Muffler |
| 2 | 106-8904-03 | 1 | Shield-Clutch |
| 3 | 106-8848-01 | 1 | Tube-Shield, Muffler |
| 4 | 106-8906-01 | 1 | Bracket-Shield, Muffler |
| 5 | 107-7547 | 1 | Plate-Warning |
| 6 | 3269-32 | 2 | Rivet-Pop |
| 7 | 93-8744 | 7 | Rivet-Blind |
| 8 | 32144-4 | 10 | Screw-HWH |

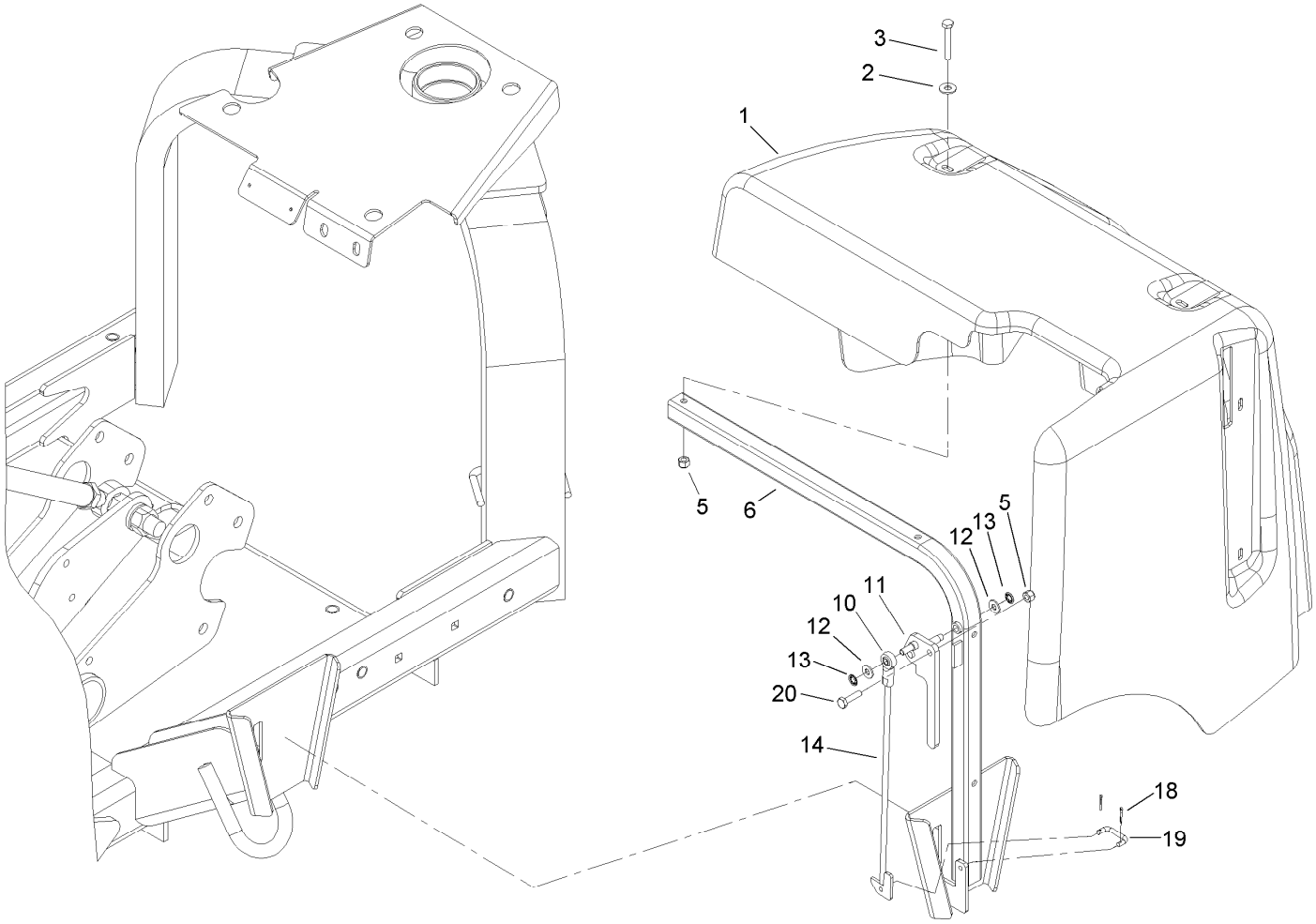


# Jackshaft Hood Assembly

| Ref. | Part Number | Qty. | Description |
|---|---|---|---|
| 1 | 106-8901 | 1 | Hood-Front |
| 2 | 100-2400 | 4 | Washer |
| 3 | 321-10 | 4 | Screw-HH |
| 5 | 3296-42 | 5 | Nut-Lock, NI |
| 6 | 106-8846-03 | 1 | Frame-Hood |
| 10 | 2411-41 | 1 | Rod End-Ball Joint |
| 11 | 106-8924-03 | 1 | Hood Latch Lever ASM |
| 12 | 3256-22 | 2 | Washer-Flat |
| 13 | 104-8310 | 2 | Ring-Retaining |
| 14 | 106-8928 | 1 | Hook ASM |
| 18 | 3272-1 | 2 | Pin-Cotter |
| 19 | 69-9140 | 1 | Link-Lever, Valve |
| 20 | 321-6 | 1 | Screw-HH |

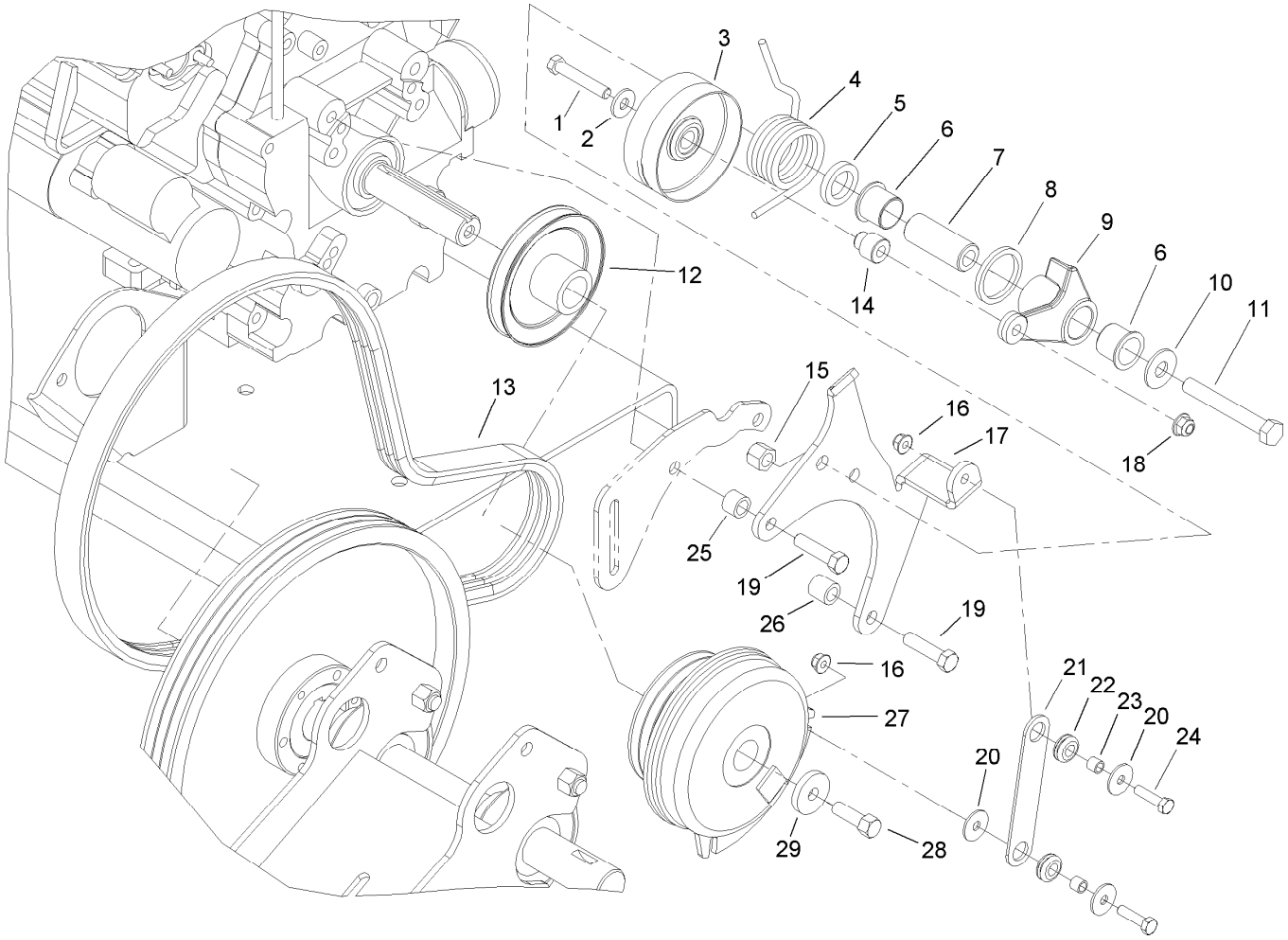


# Primary Belt Drive Assembly

| Ref. | Part Number | Qty. | Description |
|---|---|---|---|
| 1 | 323-11 | 1 | Screw-HH |
| 2 | 80-6990 | 1 | Washer-Hardened |
| 3 | 99-3621 | 1 | Pulley-Idler |
| 4 | 100-4844 | 1 | Spring-Torsion |
| 5 | 99-3625 | 1 | Spacer-Arm, Idler |
| 6 | 99-3631 | 2 | Bushing-Flange |
| 7 | 105-0945 | 1 | Sleeve-Pivot |
| 8 | 72-4170 | 1 | Washer |
| 9 | 99-3623-03 | 1 | Arm-Idler |
| 10 | 3256-6 | 1 | Washer-Flat |
| 11 | 325-15 | 1 | Screw-HH |
| 12 | 107-3379 | 1 | Pulley |
| 13 | 105-0989 | 1 | Belt-3V |
| 14 | 99-3622 | 1 | Spacer-Idler |
| 15 | 3296-23 | 1 | Nut-Lock, NI |

| Ref. | Part Number | Qty. | Description |
|---|---|---|---|
| 16 | 104-8300 | 2 | Nut-HF, NI |
| 17 | 105-0986-03 | 1 | Bracket-Mounting, Idler |
| 18 | 104-8301 | 1 | Nut-HF, NI |
| 19 | 324-7 | 3 | Screw-HH |
| 20 | 3256-82 | 3 | Washer-Flat |
| 21 | 107-3382 | 1 | Strap-Clutch |
| 22 | 1-633630 | 2 | Grommet |
| 23 | 1-633545 | 2 | Spacer |
| 24 | 322-6 | 2 | Screw-HH |
| 25 | 68-5440 | 2 | Spacer |
| 26 | 105-0985 | 1 | Spacer-Support, Idler |
| 27 | 108-2126 | 1 | Clutch-Electric |
| 28 | 26-0671 | 1 | Screw-HH |
| 29 | 1-543610 | 1 | Washer-Clutch |

● Not illustrated

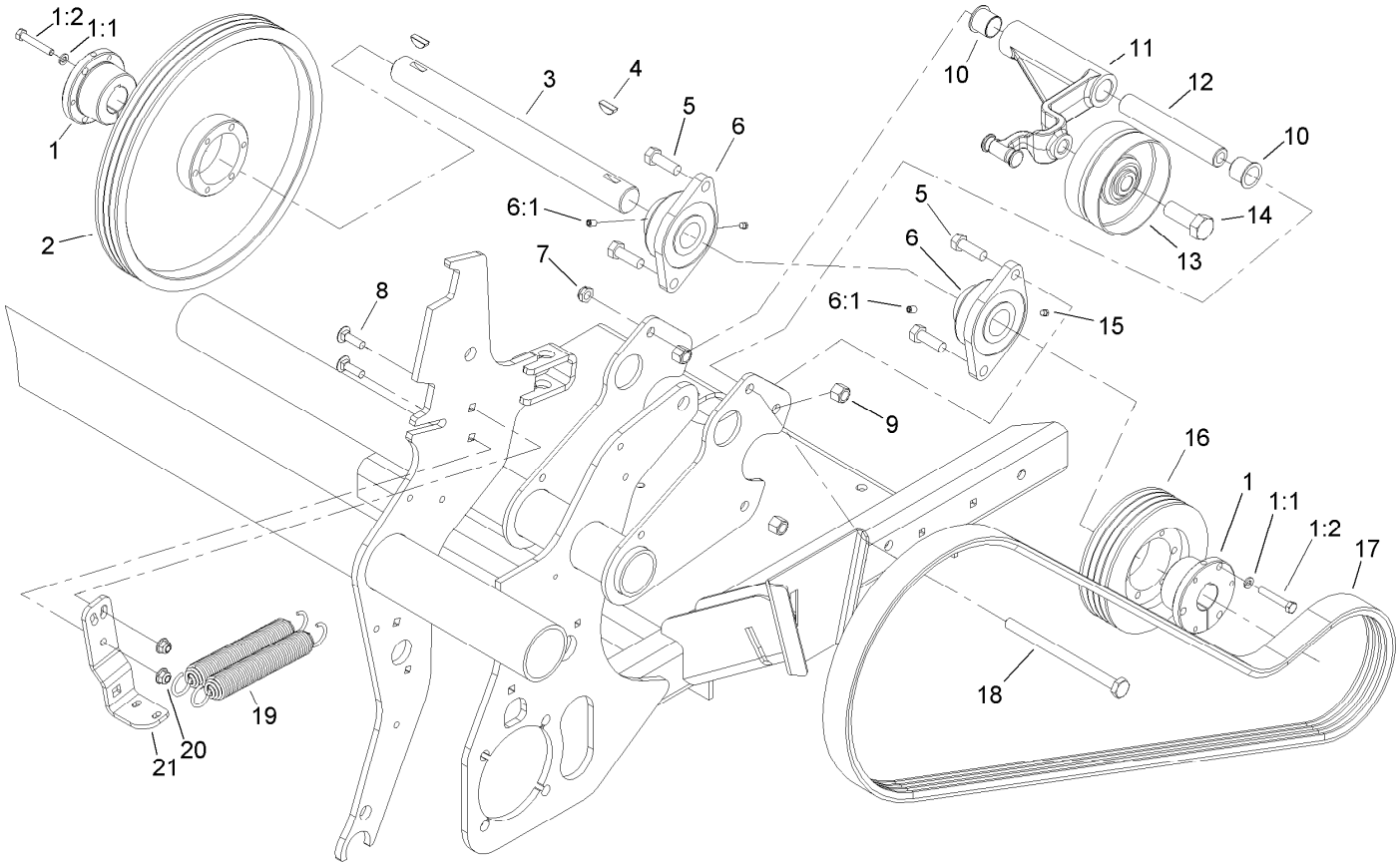


# Secondary Belt Drive Assembly

| Ref. | Part Number | Qty. | Description |
|---|---|---|---|
| 1 | 59-3790 | 2 | Bushing-Lock, Taper |
| 1:1 | 3253-4 | 3 | Washer-Lock |
| 1:2 | 322-10 | 3 | Screw-HH |
| 2 | 105-0977 | 1 | Pulley-3V |
| 3 | 105-0975 | 1 | Jackshaft |
| 4 | 3257-42 | 2 | Key-Woodruff |
| 5 | 325-6 | 4 | Screw-HH |
| 6 | 105-0962 | 2 | Bearing-Mount, Flange |
| 6:1 | 3246-17 | 1 | Setscrew-HSH |
| 7 | 3296-45 | 1 | Nut-Hex |
| 8 | 3231-25 | 2 | Bolt-CARR |
| 9 | 3296-23 | 4 | Nut-Lock, NI |
| 10 | 99-3631 | 2 | Bushing-Flange |
| 11 | 105-1132-03 | 1 | Arm-Idler |
| 12 | 105-1172 | 1 | Tube-Pivot, Idler |
| 13 | 100-7631 | 1 | Pulley-Idler |
| 14 | 328-24 | 1 | Screw-HH |
| 15 | 302-59 | 2 | Plug-Threaded |
| 16 | 105-0976 | 1 | Pulley-3V |
| 17 | 105-0991 | 1 | Belt-Banded, 4 Groove |
| 18 | 325-36 | 1 | Screw-HH |
| 19 | 106-8933 | 2 | Spring-Extension |
| 20 | 104-8301 | 2 | Nut-HF, NI |
| 21 | 105-1118-03 | 1 | Arm-Spring, Idler |

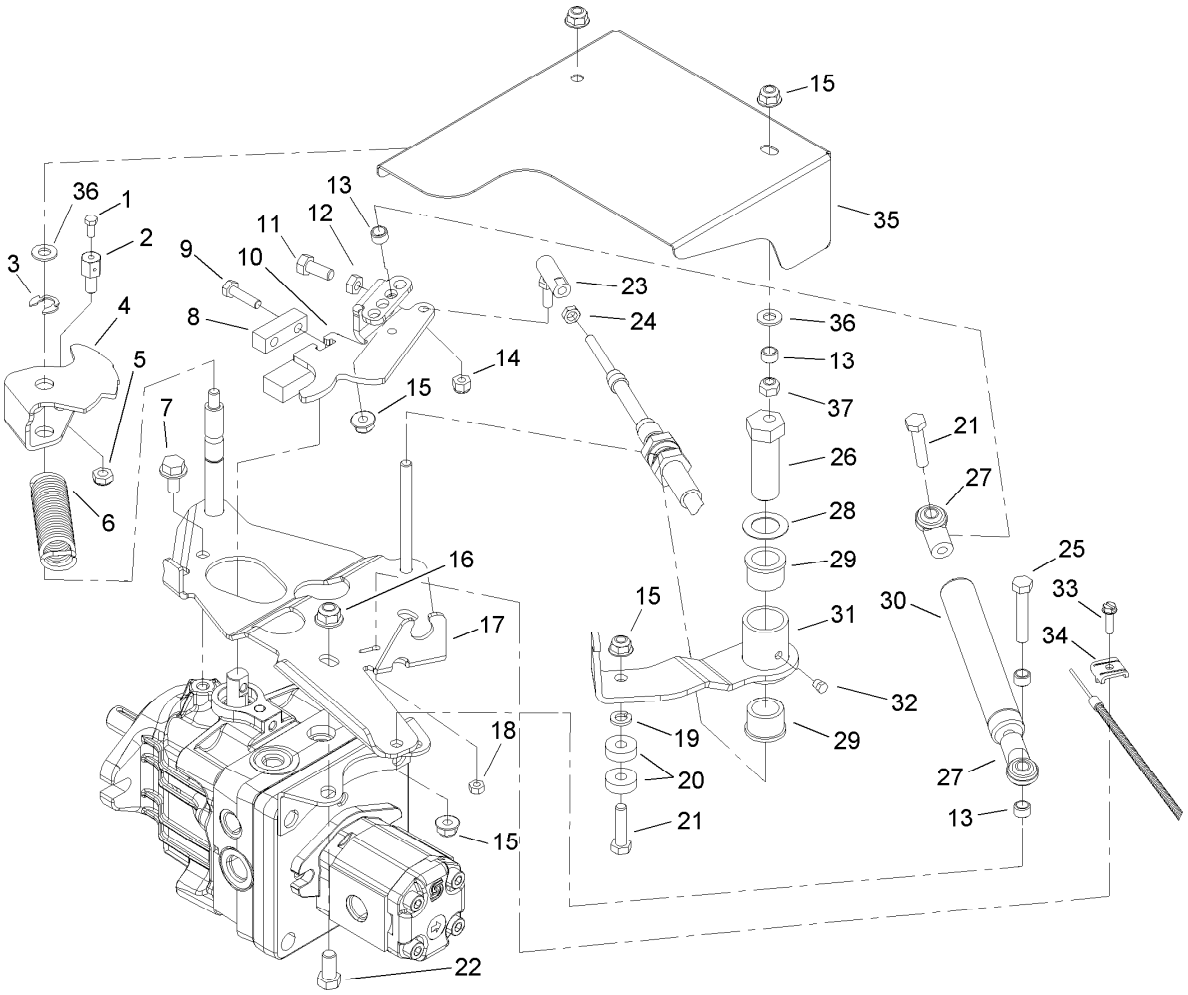


# Hydrostat Control Assembly

| Ref. | Part Number | Qty. | Description |
|---|---|---|---|
| 1 | 25-8640 | 1 | Screw-HH |
| 2 | 98-9311 | 1 | Swivel-Throttle |
| 3 | 32151-68 | 1 | Ring-Retaining |
| 4 | 105-1129-01 | 1 | Pivot-Selector, Speed |
| 5 | 3296-20 | 1 | Nut-Lock, NI |
| 6 | 707451 | 1 | Spring-Extension |
| 7 | 32144-14 | 1 | Screw-HWHTF |
| 8 | 105-1109 | 1 | Clamp-Trunnion |
| 9 | 321-6 | 2 | Screw-HH |
| 10 | 105-1125-01 | 1 | Lever-Pump |
| 11 | 3210-3 | 1 | Screw-HH |
| 12 | 3220-2 | 1 | Nut-Jam |
| 13 | 92-3133 | 4 | Spacer-Lever, Traction |
| 14 | 3296-3 | 1 | Nut-Lock |
| 15 | 104-8300 | 5 | Nut-HF, NI |
| 16 | 104-8301 | 2 | Nut-HF, NI |
| 17 | 105-1112-01 | 1 | Control Bracket ASM |
| 18 | 3296-2 | 1 | Nut-Lock, NI |
| 19 | 3253-4 | 1 | Washer-Lock |
| 20 | 251-259 | 2 | Bearing-Ball |
| 21 | 322-7 | 2 | Screw-HH |
| 22 | 323-4 | 2 | Screw-HH |
| 23 | 2411-34 | 1 | Joint-Ball |
| 24 | 3220-1 | 1 | Nut-Jam |
| 25 | 322-9 | 1 | Screw-HH |
| 26 | 76-8640 | 1 | Stud-Traction |
| 27 | 104-8331 | 2 | End-Rod, Spherical |
| 28 | 3-6498 | 1 | Washer-Thrust |
| 29 | 256-113 | 2 | Bushing-Flange |
| 30 | 105-3249 | 1 | Damper |
| 31 | 105-1060-01 | 1 | Lever-Neutral |
| 32 | 302-59 | 1 | Plug-Threaded |
| 33 | 32105-13 | 1 | Screw-HWH |
| 34 | 81-1690 | 1 | Clamp-Cable |
| 35 | 107-7578-01 | 1 | Shield-Hydrostat |
| 36 | 3256-23 | 2 | Washer-Plain |
| 37 | 3296-29 | 1 | Nut-Lock, NI |

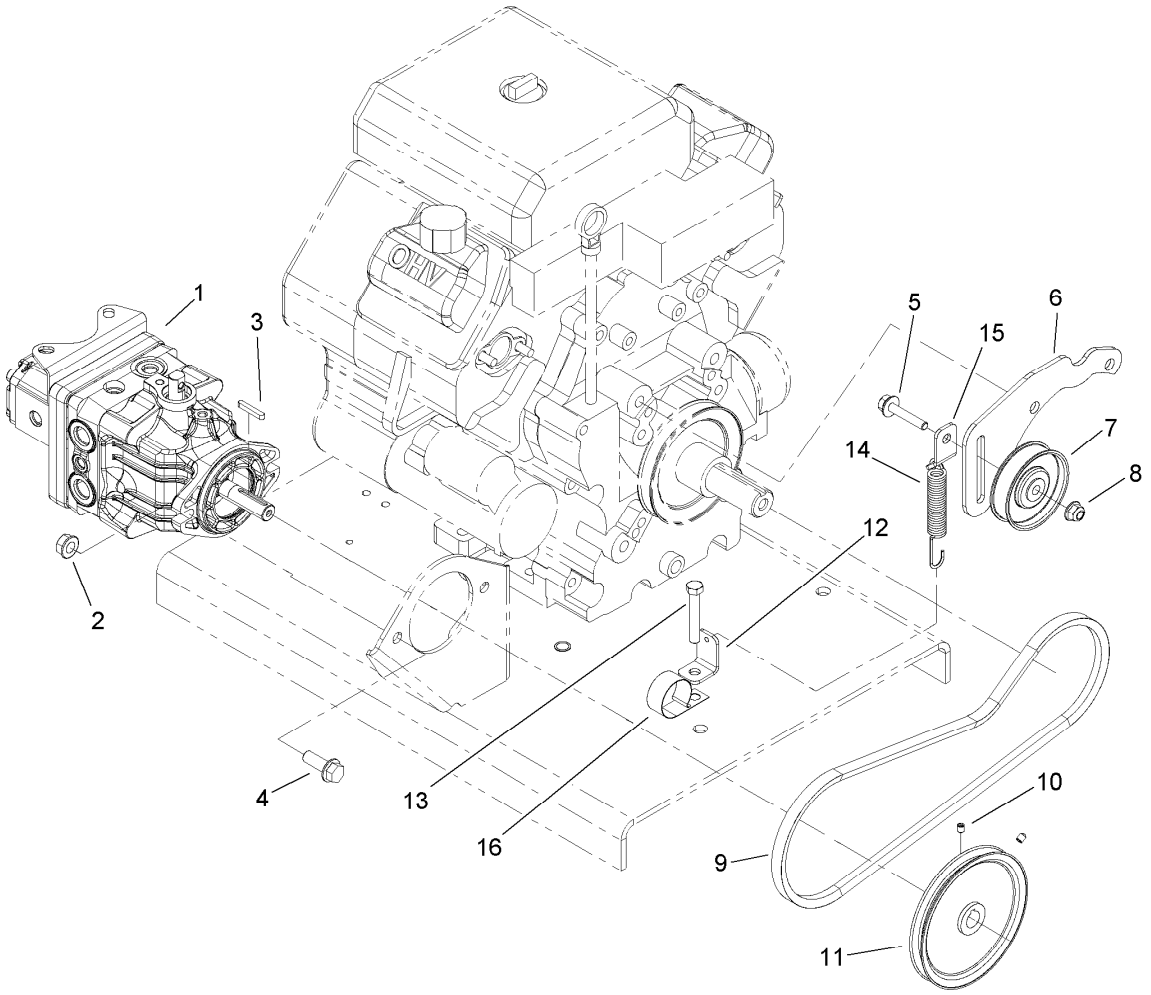


# Hydrostat Pump Assembly

| *Ref.* | *Part Number* | *Qty.* | *Description* |
|---|---|---|---|
| 1 | 105-1005 | 1 | Hydrostat And Pump ASM |
| 2 | 32128-37 | 2 | Nut-HF |
| 3 | 103-2739 | 1 | Key |
| 4 | 3234-15 | 2 | Screw-HHF |
| 5 | 3234-19 | 1 | Screw-HHF |
| 6 | 105-1085-03 | 1 | Support-Idler |
| 7 | 112426 | 1 | Pulley-Idler |
| 8 | 104-8301 | 1 | Nut-HF, NI |
| 9 | 107-7513 | 1 | V-Belt |
| 10 | 3245-7 | 2 | Screw-Set |
| 11 | 105-0988 | 1 | Pulley-Drive |
| 12 | 107-7583 | 1 | Bracket-L |
| 13 | 104-3396 | 1 | Screw-HH |
| 14 | 106-4502 | 1 | Spring-Scraper |
| 15 | 107-7588 | 1 | Bracket-Spring |
| 16 | 2412-150 | 1 | Clip-J |

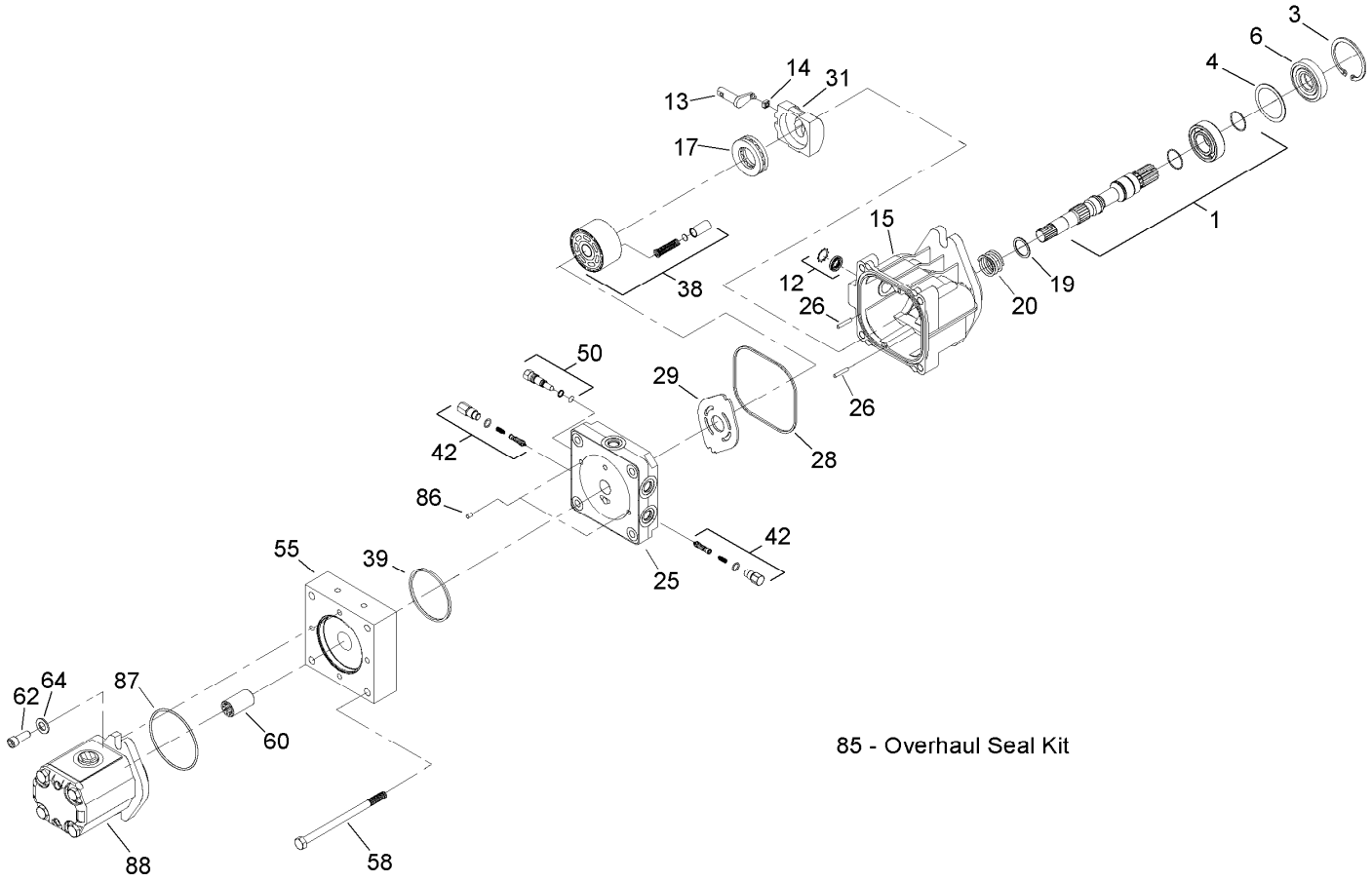


# Hydrostat and Pump Assembly No. 105-1005

| Ref. | Part Number | Qty. | Description |
|---|---|---|---|
| 1 | | 1 | Kit-Shaft, Pump ● |
| 3 | | 1 | Ring-Retaining ● |
| 4 | | 1 | Spacer ● |
| 6 | | 1 | Seal-Lip ● |
| 12 | | 1 | Kit-Seal, Trunnion ● |
| 13 | | 1 | Arm-Trunnion ● |
| 14 | | 1 | Slot-Guide ● |
| 15 | | 1 | Housing Kit ● |
| 17 | | 1 | Thrust Bearing ASM ● |
| 19 | | 1 | Washer-Thrust ● |
| 20 | | 1 | Spring-Block ● |
| 25 | | 1 | Endcap Kit ● |
| 26 | | 2 | Pin ● |
| 28 | | 1 | Seal-Dust ● |
| 29 | 108-2111 | 1 | Plate-Valve |

| Ref. | Part Number | Qty. | Description |
|---|---|---|---|
| 31 | | 1 | Swashplate-Variable ● |
| 38 | 108-2112 | 1 | Cylinder Block Kit |
| 39 | | 1 | Ring ● |
| 42 | 108-2109 | 2 | Shock Valve Kit |
| 50 | 106-8759 | 1 | Bypass Valve Kit |
| 55 | | 1 | Plate-Adapter ● |
| 58 | | 4 | Hex Screw, Flanged HD ● |
| 60 | | 1 | Coupling ● |
| 62 | | 2 | Capscrew-Sh ● |
| 64 | | 2 | Washer ● |
| 85 | 108-2110 | 1 | Overhaul Seal Kit |
| 86 | | 2 | Pin ● |
| 87 | | 1 | Seal-Dust ● |
| 88 | 108-2113 | 1 | Pump-HYD |

● Not serviced separately

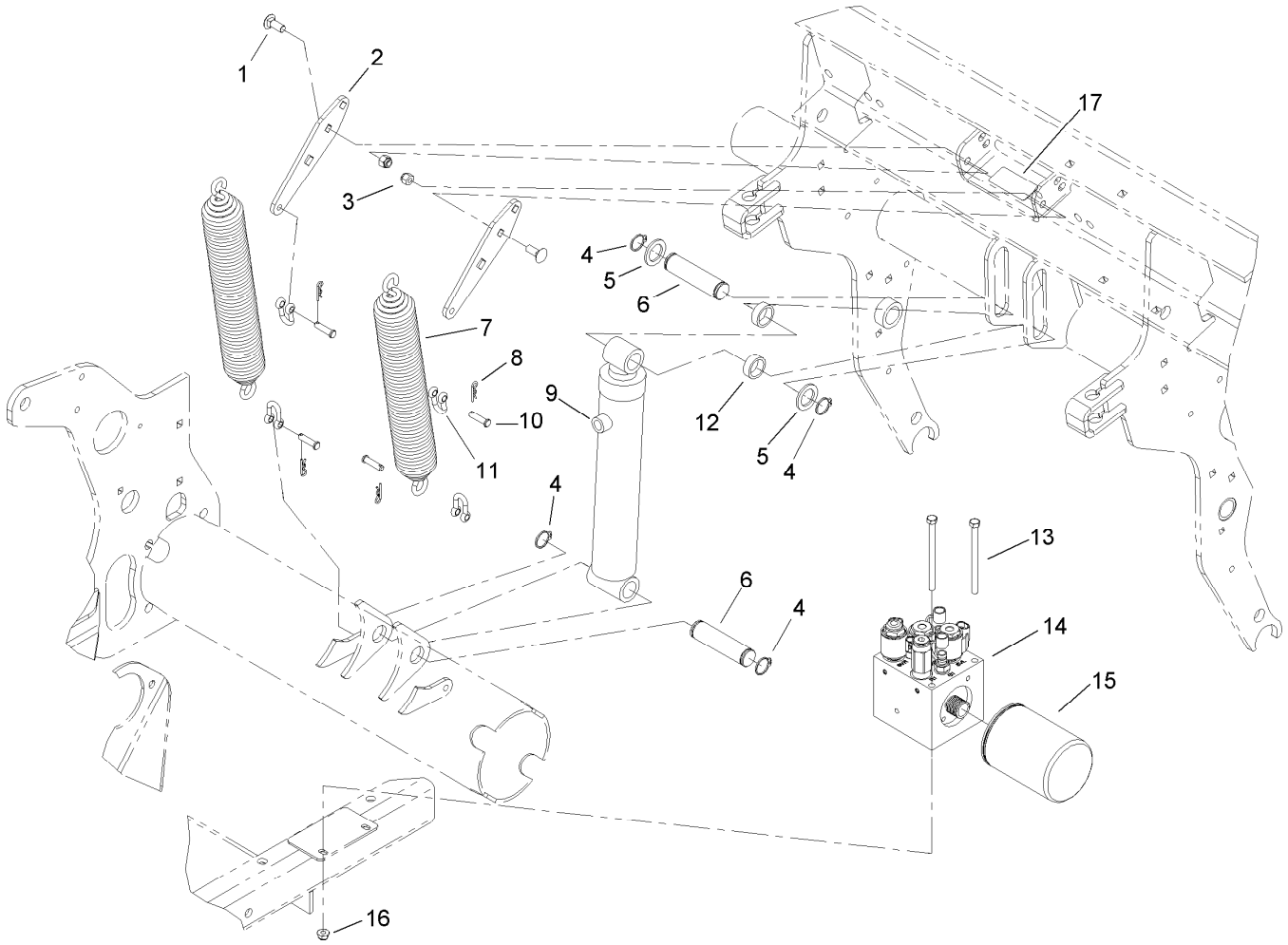


# Lift System Assembly

| Ref. | Part Number | Qty. | Description |
|---|---|---|---|
| 1 | 3231-2 | 4 | Bolt-CARR |
| 2 | 105-1190-01 | 2 | Plate-Tension, Spring |
| 3 | 104-8301 | 4 | Nut-HF, NI |
| 4 | 32151-36 | 4 | Ring-Retaining |
| 5 | 256-115 | 2 | Washer-Thrust |
| 6 | 105-1031 | 2 | Pin-Cylinder |
| 7 | 105-1156-03 | 2 | Spring-Extention |
| 8 | 3290-307 | 4 | Pin-Cotter |
| 9 | 105-1030 | 1 | HYD Cylinder ASM |
| 10 | 283-6 | 4 | Pin-Clevis |
| 11 | 282-4 | 4 | Shackle |
| 12 | 88-7530 | 2 | Spacer |
| 13 | 322-38 | 2 | Screw-HH |
| 14 | 106-8802 | 1 | Manifold-Control |
| 15 | 105-0438 | 1 | Element-Filter |
| 16 | 104-8300 | 2 | Nut-HF, NI |
| 17 | 93-6696 | 1 | Decal-Warning |

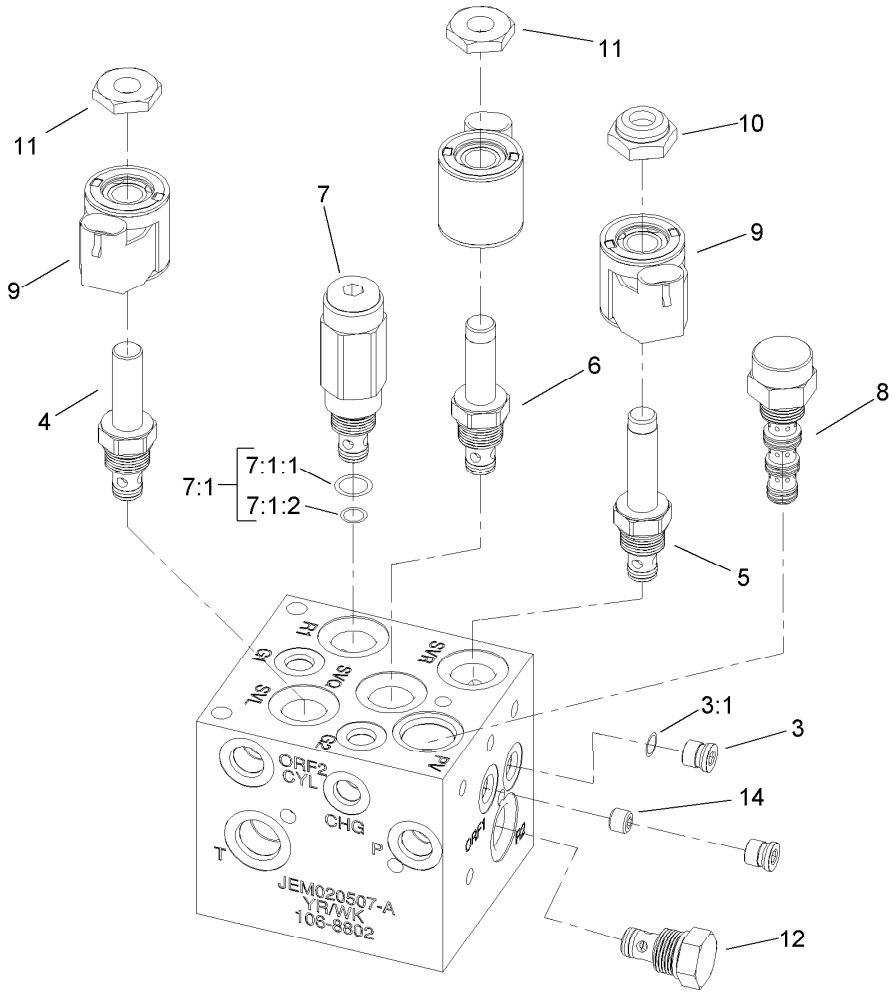


# Control Manifold Assembly No. 106-8802

| *Ref.* | *Part Number* | *Qty.* | *Description* |
|---|---|---|---|
| 3 | 106-1025 | 2 | Plug-HYD |
| 3:1 | 237-78 | 1 | O-Ring |
| 4 | 112-9206 | 1 | Solenoid Valve ASM |
| 5 | 107-7517 | 1 | Valve-Solenoid |
| 6 | 107-7518 | 1 | Valve-Solenoid |
| 7 | 107-7519 | 1 | Valve-Relief, 900 PSI |
| 7:1 | 105-9156 | 1 | Seal Kit |
| 7:1:1 | | 1 | Seal-Dust ● |
| 7:1:2 | | 1 | Ring-Back-Up ● |
| 8 | 107-7520 | 1 | Compensator-Pressure (W/Screen) |
| 9 | 107-7521 | 3 | Coil-E, 12V |
| 10 | 107-7522 | 1 | Nut-E Coil |
| 11 | 105-9332 | 2 | Nut-E Coil |
| 12 | 107-7524 | 1 | Check Valve ASM |
| 14 | 107-7525 | 1 | Plug-Orifice (.050 Inch) |

● Not serviced separately

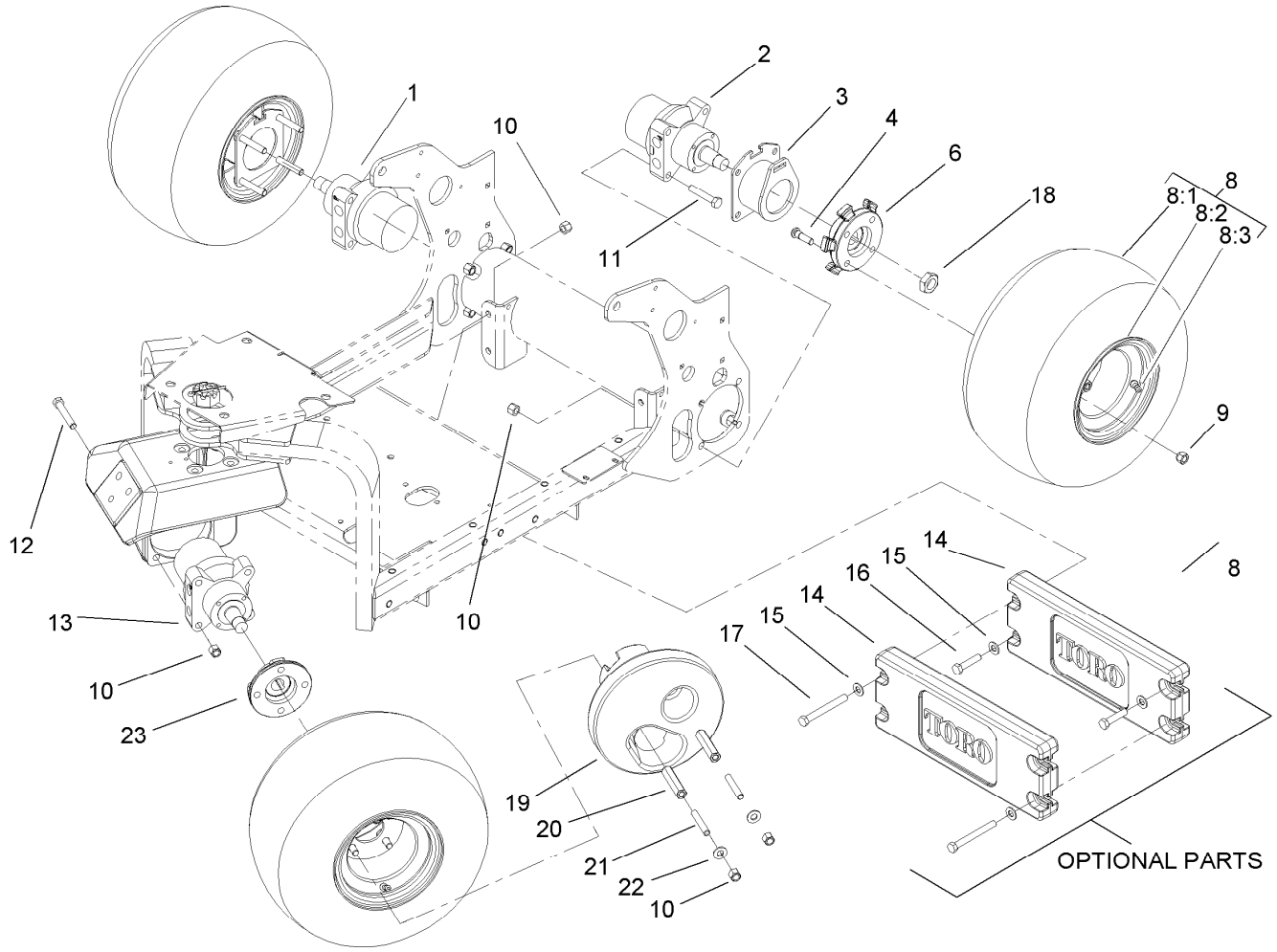


# Wheel and Motor Assembly

| Ref. | Part Number | Qty. | Description |
|---|---|---|---|
| 1 | 106-8807 | 1 | HYD Motor ASM |
| 2 | 106-8806 | 1 | HYD Motor ASM |
| 3 | 106-8881-03 | 2 | Support-Latch, Parking |
| 4 | 85-6540 | 12 | Stud-Drive |
| 6 | 108-2101-03 | 2 | Hub-Wheel, Spoked |
| 8 | 99-8186 | 3 | Wheel And Tire ASM |
| 8:1 | 70-8500 | 1 | Tire-Smooth, 2-Ply |
| 8:2 | 94-6116 | 1 | Wheel-Rear |
| 8:3 | 232-27 | 1 | Stem-Valve |
| 9 | 242-50 | 10 | Nut-Lug |
| 10 | 3296-23 | 18 | Nut-Lock, NI |
| 11 | 325-11 | 8 | Screw-HH |
| 12 | 325-13 | 4 | Screw-HH |
| 13 | 106-8808 | 1 | HYD Motor ASM |
| 14 | 99-6166-01 | 2 | Counterweight-Front |
| 15 | 3256-26 | 4 | Washer-Flat |
| 16 | 325-9 | 2 | Screw-HH |
| 17 | 325-18 | 2 | Screw-HH |
| 18 | 26-3790 | 3 | Nut-Lock |
| 19 | 107-3396-03 | 1 | Weight-Wheel |
| 20 | 107-3399 | 2 | Adapter-Weight, Wheel |
| 21 | 105-1088 | 2 | Stud |
| 22 | 87-7270 | 2 | Washer-Thrust |
| 23 | 108-2103-03 | 1 | Hub-Wheel |

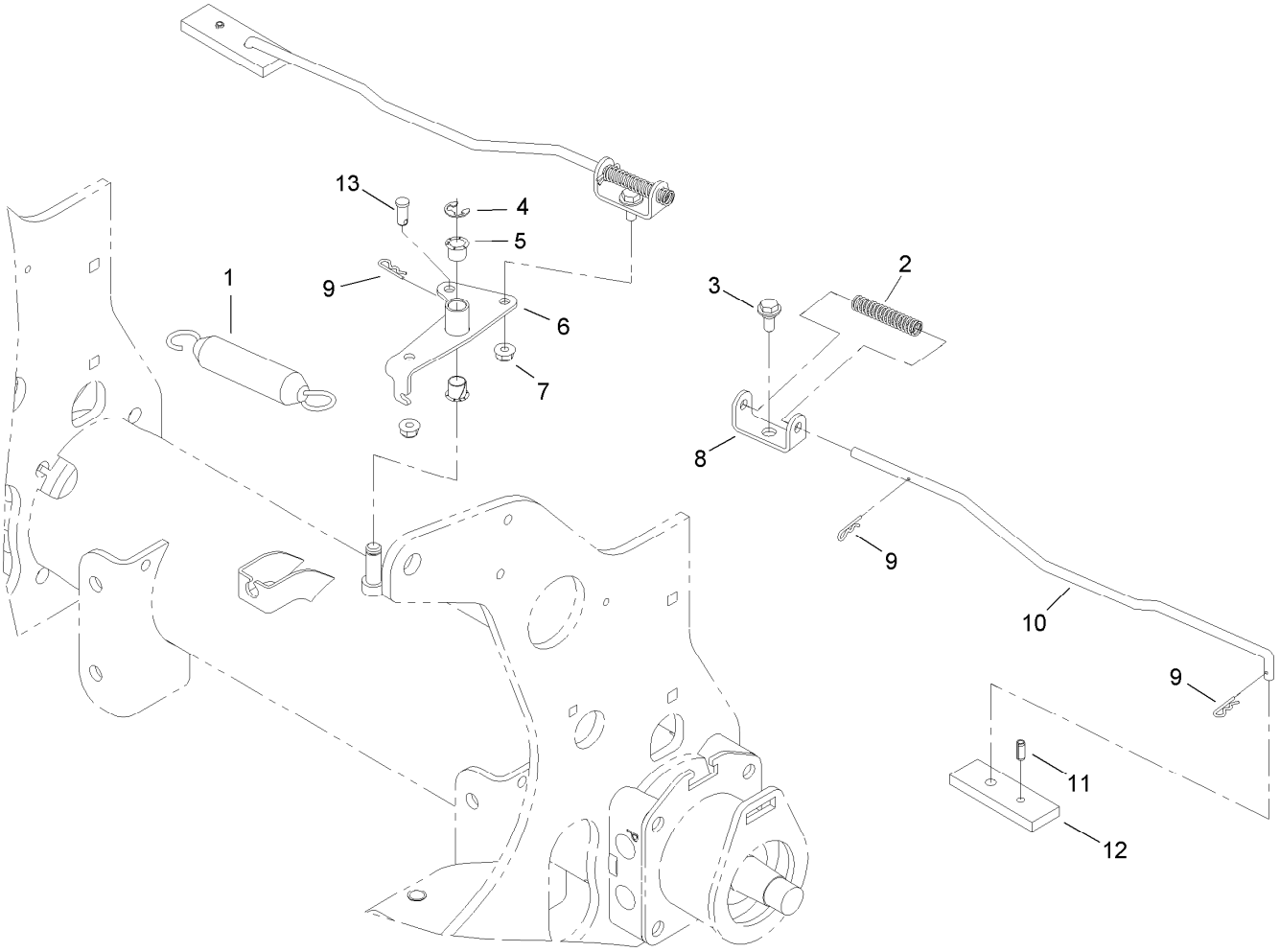


# Brake Latch Assembly

| Ref. | Part Number | Qty. | Description |
|---|---|---|---|
| 1 | 66-4270 | 1 | Spring-Extension |
| 2 | 107-3376 | 2 | Spring-Compression |
| 3 | 19-1470 | 2 | Screw-Shoulder |
| 4 | 32120-47 | 2 | Ring-Retaining, External |
| 5 | 256-257 | 2 | Bushing-Nyliner |
| 6 | 106-8887-03 | 1 | Pivot-Latch, Parking |
| 7 | 104-8300 | 2 | Nut-HF, NI |
| 8 | 106-8890-03 | 2 | Clevis-Latch, Parking |
| 9 | 3290-307 | 5 | Pin-Cotter |
| 10 | 106-8886 | 2 | Link-Latch, Parking |
| 11 | 32121-134 | 2 | Pin-Roll |
| 12 | 106-8885-03 | 2 | Bar-Latch, Parking |
| 13 | 283-62 | 1 | Pin-Clevis |

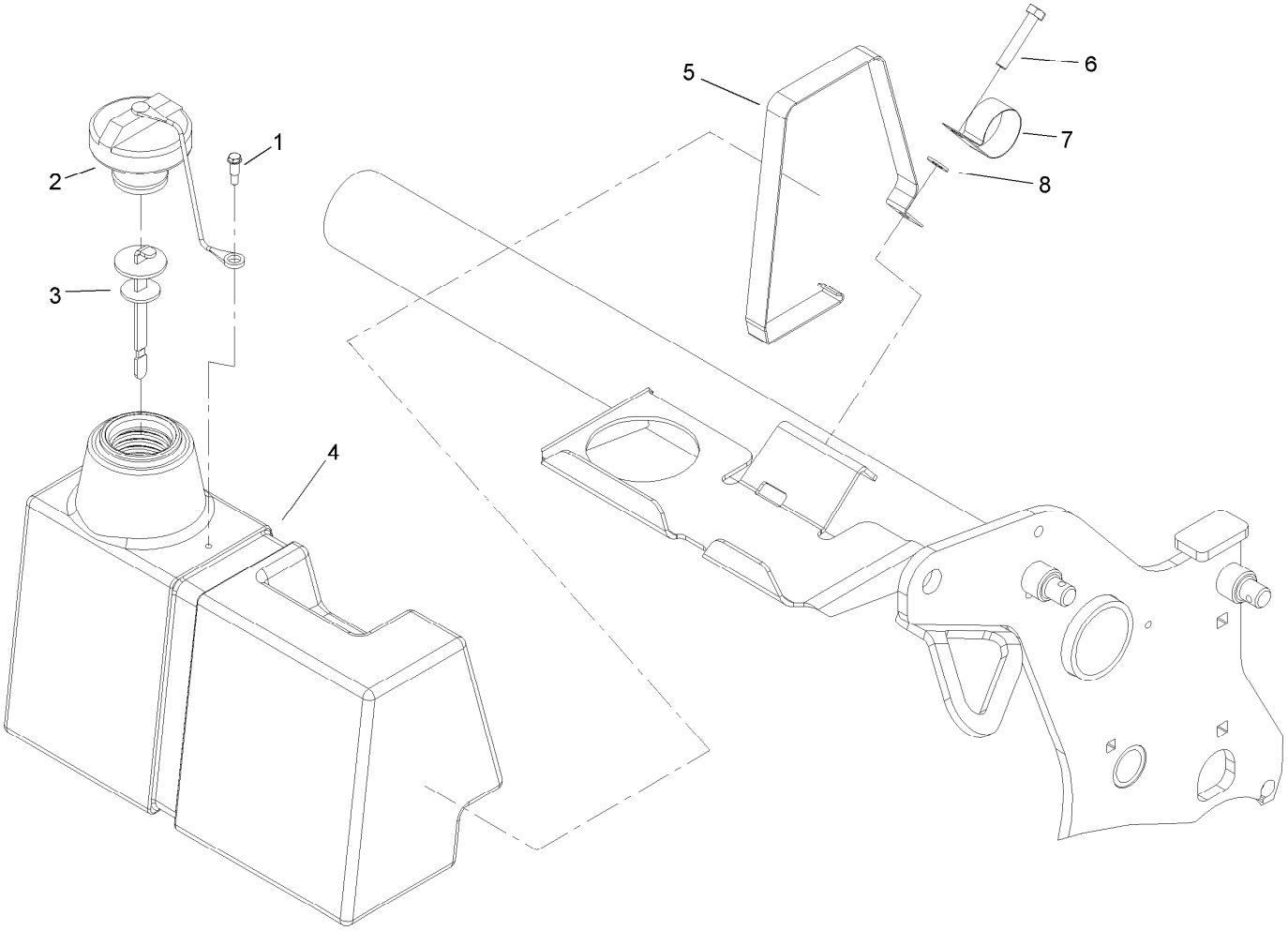


# Hydraulic Tank Assembly

| Ref. | Part Number | Qty. | Description |
|---|---|---|---|
| 1 | 57-5420 | 1 | Screw-Shoulder |
| 2 | 93-7160 | 1 | Cap-Oil, HYD |
| 3 | 106-8811 | 1 | Dipstick ASM |
| 4 | 106-8877 | 1 | Reservoir-Oil, HYD |
| 5 | 94-4642-03 | 1 | Strap-Tank, HYD |
| 6 | 322-41 | 1 | Screw-HH |
| 7 | 2412-150 | 1 | Clip-J |
| 8 | 3256-23 | 1 | Washer-Plain |

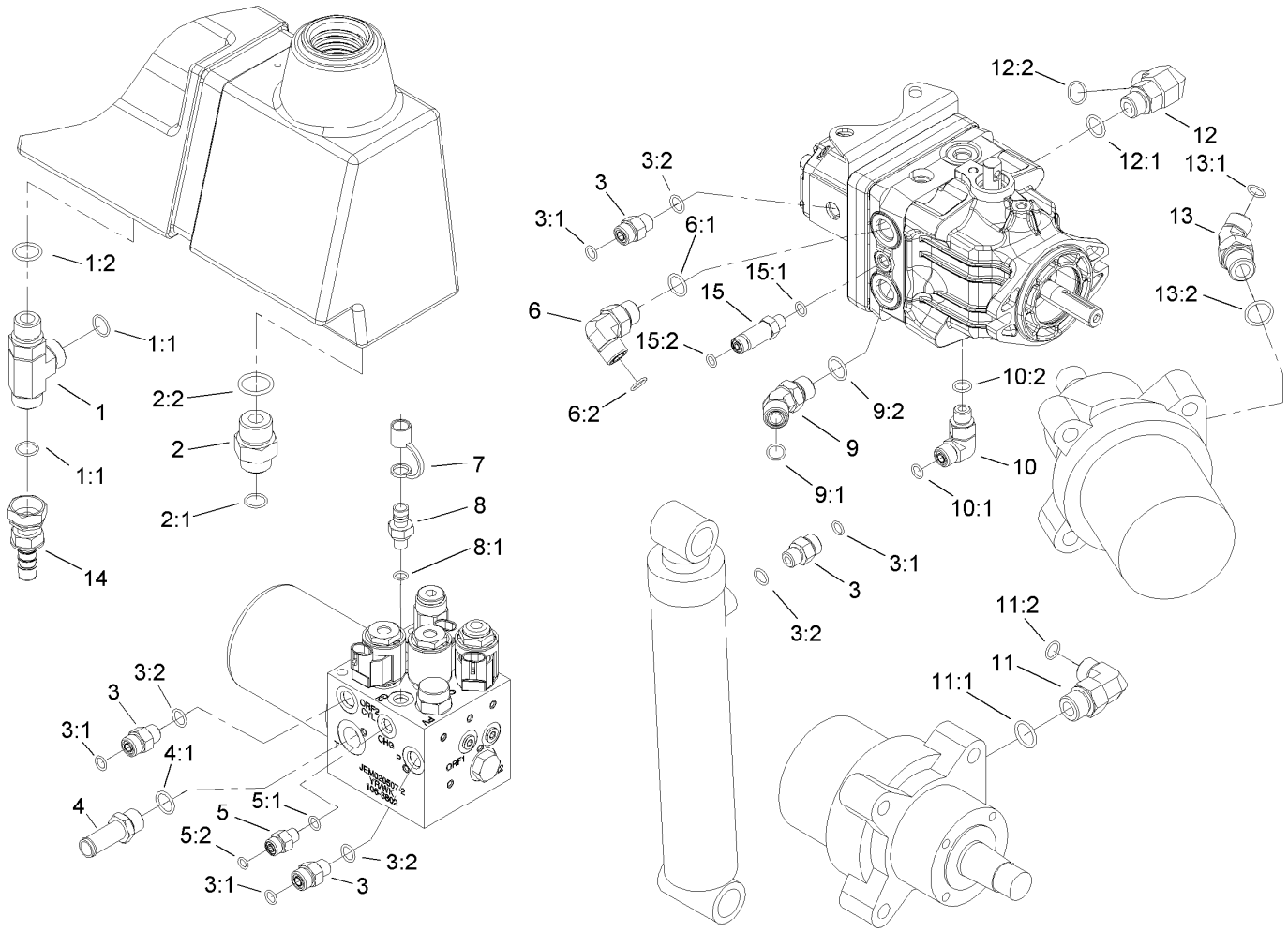


# Hydraulic Fitting Assembly

| Ref. | Part Number | Qty. | Description |
|---|---|---|---|
| 1 | 340-22 | 1 | Fitting-Tee |
| 1:1 | 237-65 | 2 | O-Ring |
| 1:2 | 237-80 | 1 | O-Ring |
| 2 | 340-8 | 1 | Fitting-Straight |
| 2:1 | 237-65 | 1 | O-Ring |
| 2:2 | 237-81 | 1 | O-Ring |
| 3 | 340-2 | 4 | Fitting-Straight |
| 3:1 | 237-22 | 1 | O-Ring |
| 3:2 | 237-42 | 1 | O-Ring |
| 4 | 107-7569 | 1 | Fitting-STR |
| 4:1 | 237-79 | 1 | O-Ring |
| 5 | 340-92 | 1 | Fitting-Straight |
| 5:1 | 237-78 | 1 | O-Ring |
| 5:2 | 237-21 | 1 | O-Ring |
| 6 | 340-98 | 1 | Fitting-Elbow, 90 DEG |
| 6:1 | 237-79 | 1 | O-Ring |
| 6:2 | 237-30 | 1 | O-Ring |
| 7 | 354-79 | 2 | Cap-Dust |
| 8 | 354-77 | 2 | Fitting-Quick |
| 8:1 | 237-78 | 1 | O-Ring |

| Ref. | Part Number | Qty. | Description |
|---|---|---|---|
| 9 | 340-101 | 1 | Fitting-HYD, 45 DEG |
| 9:1 | 237-30 | 1 | O-Ring |
| 9:2 | 237-79 | 1 | O-Ring |
| 10 | 340-77 | 1 | Fitting-Elbow, 90 DEG |
| 10:1 | 237-22 | 1 | O-Ring |
| 10:2 | 237-42 | 1 | O-Ring |
| 11 | 340-105 | 4 | Fitting-Elbow, 90 DEG |
| 11:1 | 237-80 | 1 | O-Ring |
| 11:2 | 237-30 | 1 | O-Ring |
| 12 | 340-153 | 1 | Fitting-Elbow, 90 DEG |
| 12:1 | 237-79 | 1 | O-Ring |
| 12:2 | 237-151 | 1 | O-Ring |
| 13 | 340-89 | 2 | Fitting-HYD, 45 DEG |
| 13:1 | 237-30 | 1 | O-Ring |
| 13:2 | 237-80 | 1 | O-Ring |
| 14 | 107-7568 | 1 | Fitting-HYD, Barbed |
| 15 | 94-1403 | 1 | Adapter-HYD |
| 15:1 | 237-78 | 1 | O-Ring |
| 15:2 | 237-21 | 1 | O-Ring |

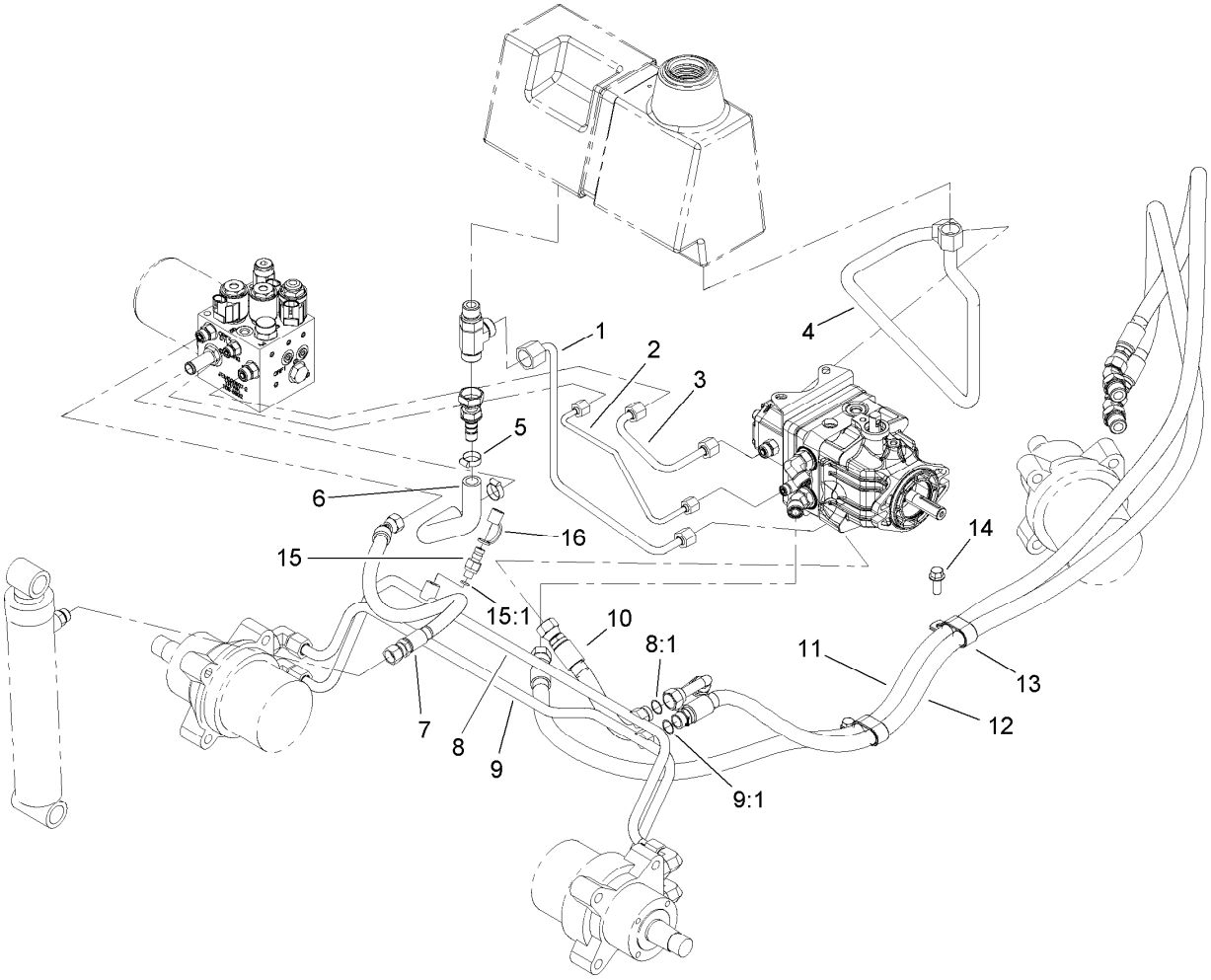


# Hydraulic Line and Hose Assembly

| Ref. | Part Number | Qty. | Description |
|---|---|---|---|
| 1 | 107-3388 | 1 | Tube ASM |
| 2 | 106-8815 | 1 | Tube ASM |
| 3 | 106-8813 | 1 | Tube ASM |
| 4 | 107-3387 | 1 | Tube ASM |
| 5 | 2412-141 | 2 | Clamp-Drive, Worm |
| 6 | 107-7565 | 1 | Hose-Formed |
| 7 | 105-3919 | 1 | Hose-HYD |
| 8 | 106-8819 | 1 | Tube ASM |
| 8:1 | 237-30 | 1 | O-Ring |
| 9 | 106-8818 | 1 | Tube ASM |
| 9:1 | 237-30 | 1 | O-Ring |
| 10 | 84-0890 | 1 | Hose ASM |
| 11 | 106-8822 | 1 | Hose ASM |
| 12 | 106-8821 | 1 | Hose ASM |
| 13 | 106-8829 | 2 | R Clamp-Double |
| 14 | 3234-11 | 2 | Screw-HHF |
| 15 | 354-77 | 1 | Fitting-Quick |
| 15:1 | 237-78 | 1 | O-Ring |
| 16 | 354-79 | 1 | Cap-Dust |

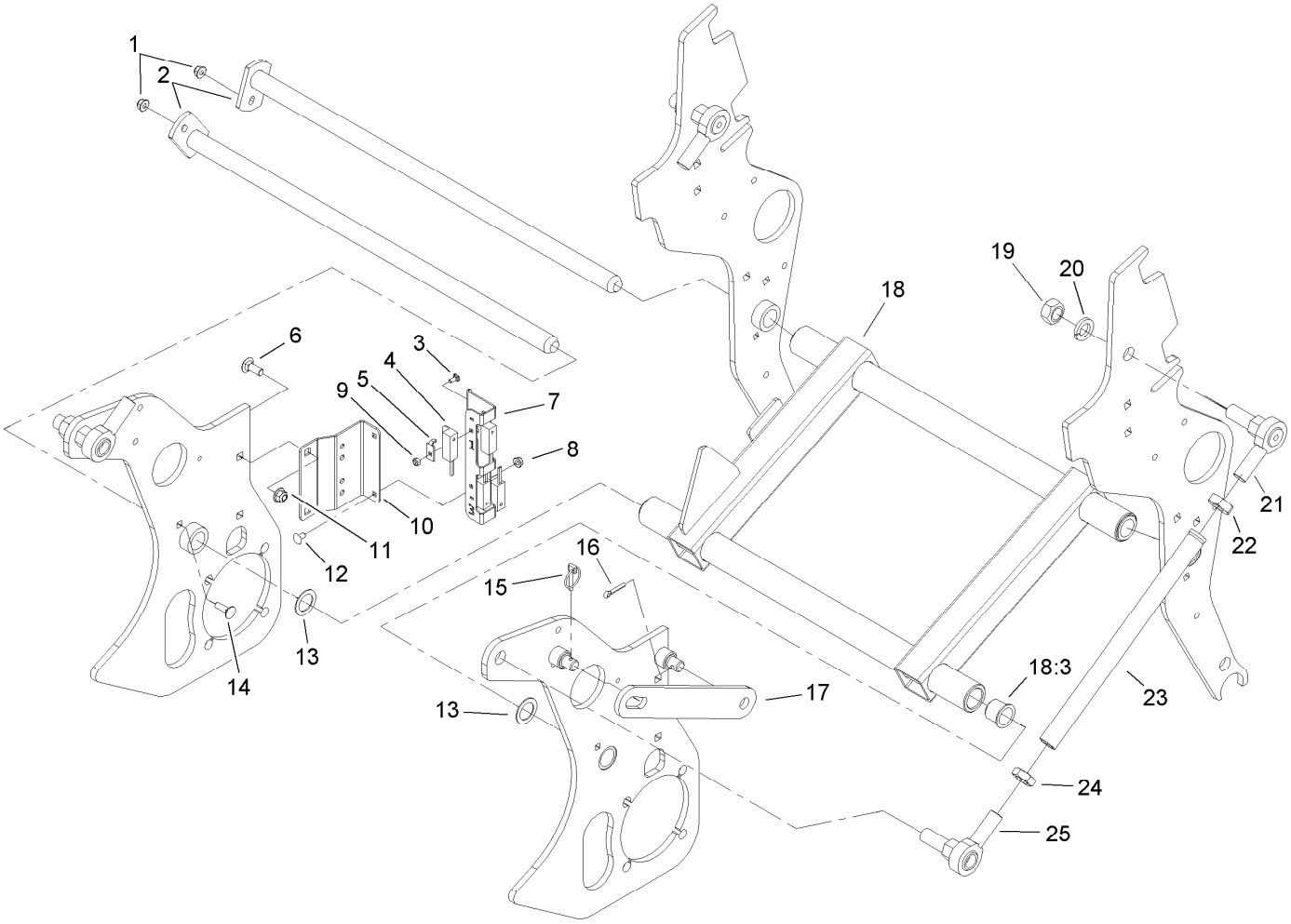


# H-Frame Assembly

| Ref. | Part Number | Qty. | Description |
|---|---|---|---|
| 1 | 104-8300 | 2 | Nut-HF, NI |
| 2 | 105-0950 | 2 | Pivot Shaft ASM |
| 3 | 104-1450 | 4 | Bolt-CARR |
| 4 | 100-1270 | 4 | Switch-Proximity |
| 5 | 100-4872 | 4 | Plate-Switch, Neutral |
| 6 | 3231-2 | 2 | Bolt-CARR |
| 7 | 107-7515 | 1 | Bracket-Mount, Switch |
| 8 | 32128-10 | 2 | Nut-Lock, HHF |
| 9 | 3296-2 | 4 | Nut-Lock, NI |
| 10 | 105-1006-01 | 1 | Bracket-Switch |
| 11 | 104-8301 | 2 | Nut-HF, NI |
| 12 | 3229-10 | 2 | Screw-CARR |
| 13 | 10-8110 | 3 | Washer-Thrust |

| Ref. | Part Number | Qty. | Description |
|---|---|---|---|
| 14 | 3230-2 | 2 | Bolt-CARR |
| 15 | 3290-495 | 1 | Pin-Klik |
| 16 | 3272-21 | 1 | Pin-Cotter |
| 17 | 105-0983-01 | 1 | Bar-Prop |
| 18 | 106-8805 | 1 | H-Frame ASM |
| 18:3 | 99-3631 | 4 | Bushing-Flange |
| 19 | 3219-7 | 4 | Nut-Hex |
| 20 | 3253-9 | 4 | Washer-Lock |
| 21 | 105-1025 | 2 | End-Rod |
| 22 | 3220-17 | 2 | Nut-Jam, LH |
| 23 | 105-1007 | 2 | Link-Upper |
| 24 | 3220-7 | 2 | Nut-Jam |
| 25 | 2411-40 | 2 | End-Rod |

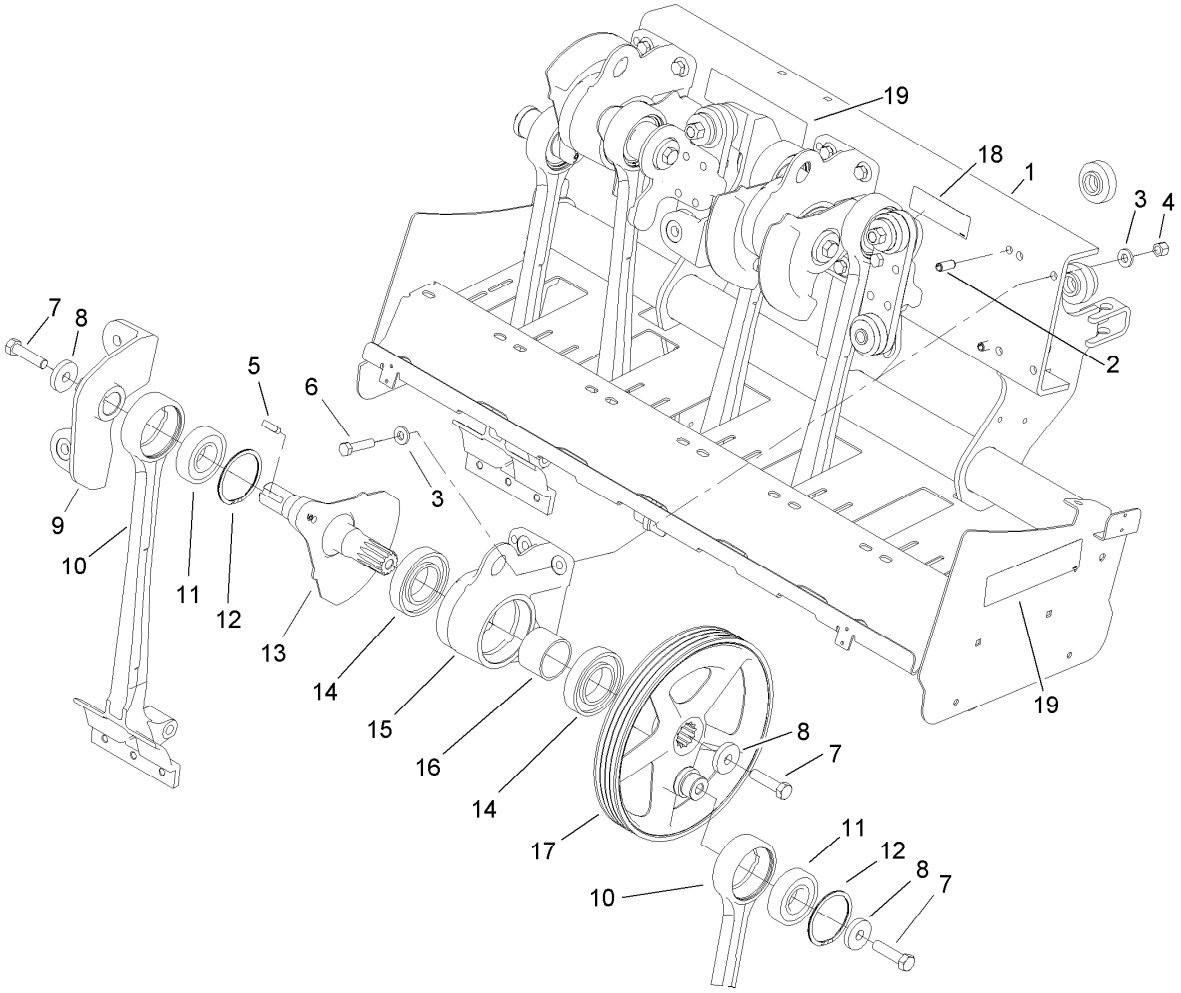


# Coring Head Crank No. 1 and 2 Assembly

| *Ref.* | *Part Number* | *Qty.* | *Description* |
|---|---|---|---|
| 1 | 105-0930-01 | 1 | Rear Frame ASM |
| 2 | 105-1041 | 2 | Pin-Spring |
| 3 | 107-3395 | 8 | Washer-Hardened |
| 4 | 3296-23 | 4 | Nut-Lock, NI |
| 5 | 105-1089 | 1 | Key-Square |
| 6 | 325-9 | 4 | Screw-HH |
| 7 | 327-7 | 3 | Screw-HH |
| 8 | 105-1016 | 3 | Washer-Flat |
| 9 | 105-0969 | 1 | Coupling-No.2 |
| 10 | 106-8873 | 2 | Arm-Stomper |
| 11 | 106-8871 | 2 | Bearing-Ball |
| 12 | 106-8872 | 2 | Ring-Retaining |
| 13 | 105-0958 | 1 | Crankarm-No. 2, 4, 6 |
| 14 | 105-0965 | 2 | Bearing-Ball |
| 15 | 105-0956 | 1 | Housing-Bearing |
| 16 | 105-1017 | 1 | Spacer |
| 17 | 105-0967 | 1 | Pulley-Crankshaft |
| 18 | 107-7548 | 1 | Decal-Torque, Bolt |
| 19 | 107-7534 | 3 | Decal-Warning |

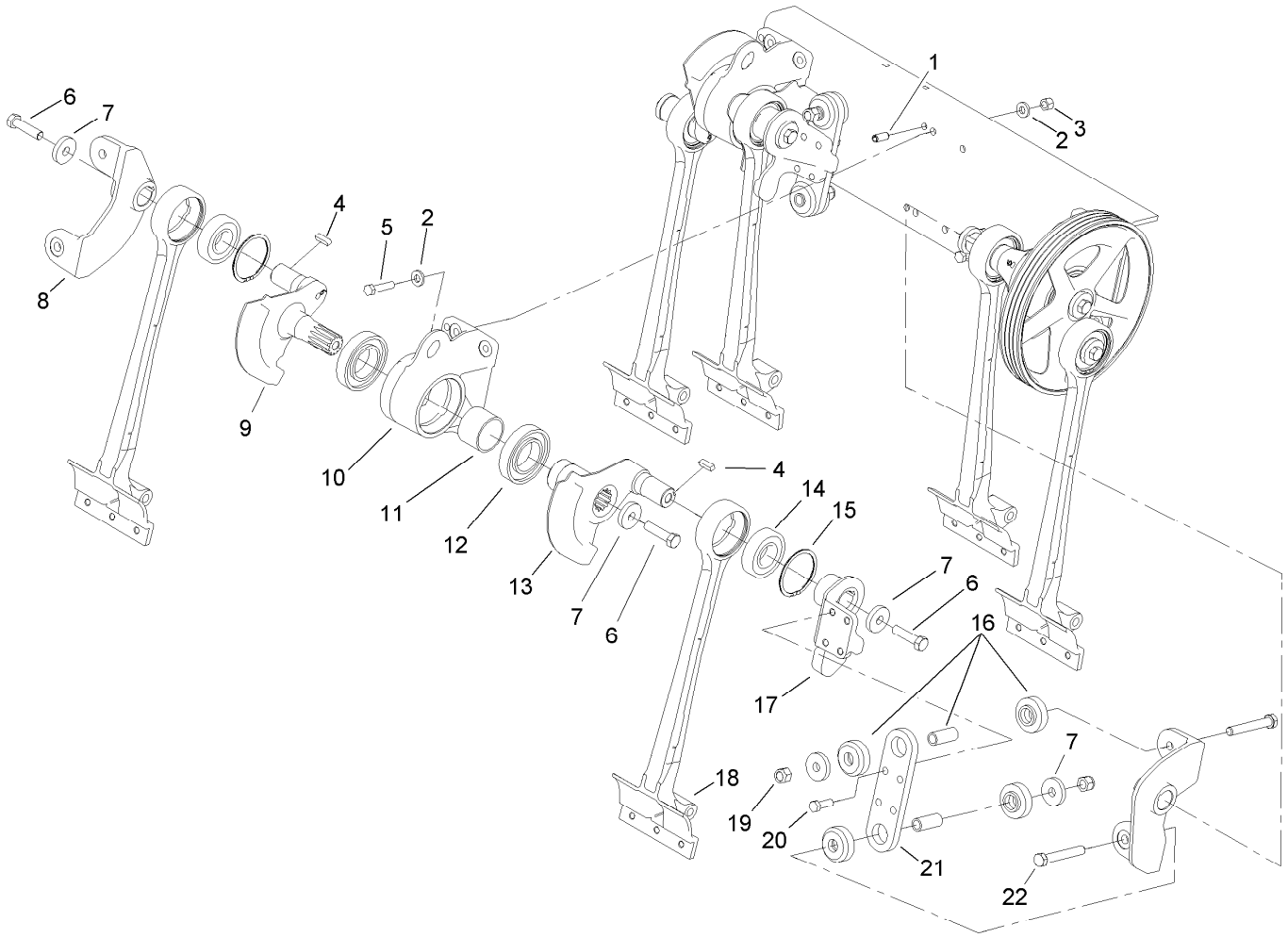


# Coring Head Crank No. 3 and 4 Assembly

| Ref. | Part Number | Qty. | Description |
|---|---|---|---|
| 1 | 105-1041 | 2 | Pin-Spring |
| 2 | 107-3395 | 8 | Washer-Hardened |
| 3 | 3296-23 | 4 | Nut-Lock, NI |
| 4 | 105-1089 | 2 | Key-Square |
| 5 | 325-9 | 4 | Screw-HH |
| 6 | 327-7 | 3 | Screw-HH |
| 7 | 105-1016 | 5 | Washer-Flat |
| 8 | 105-0946 | 1 | Coupling-No. 4 |
| 9 | 105-0958 | 1 | Crankarm-No. 2, 4, 6 |
| 10 | 105-0956 | 1 | Housing-Bearing |
| 11 | 105-1017 | 1 | Spacer |
| 12 | 105-0965 | 2 | Bearing-Ball |
| 13 | 105-0960 | 1 | Crankarm-No. 3, 5 |
| 14 | 106-8871 | 2 | Bearing-Ball |
| 15 | 106-8872 | 2 | Ring-Retaining |
| 16 | 105-0963 | 2 | Mount-ISO, Crank |
| 17 | 105-0971 | 1 | Coupling-No. 3 |
| 18 | 106-8873 | 2 | Arm-Stomper |
| 19 | 3296-53 | 2 | Nut-Lock, NI |
| 20 | 325-6 | 4 | Screw-HH |
| 21 | 105-0974-03 | 1 | Plate-Coupling |
| 22 | 327-29 | 2 | Screw-HH |

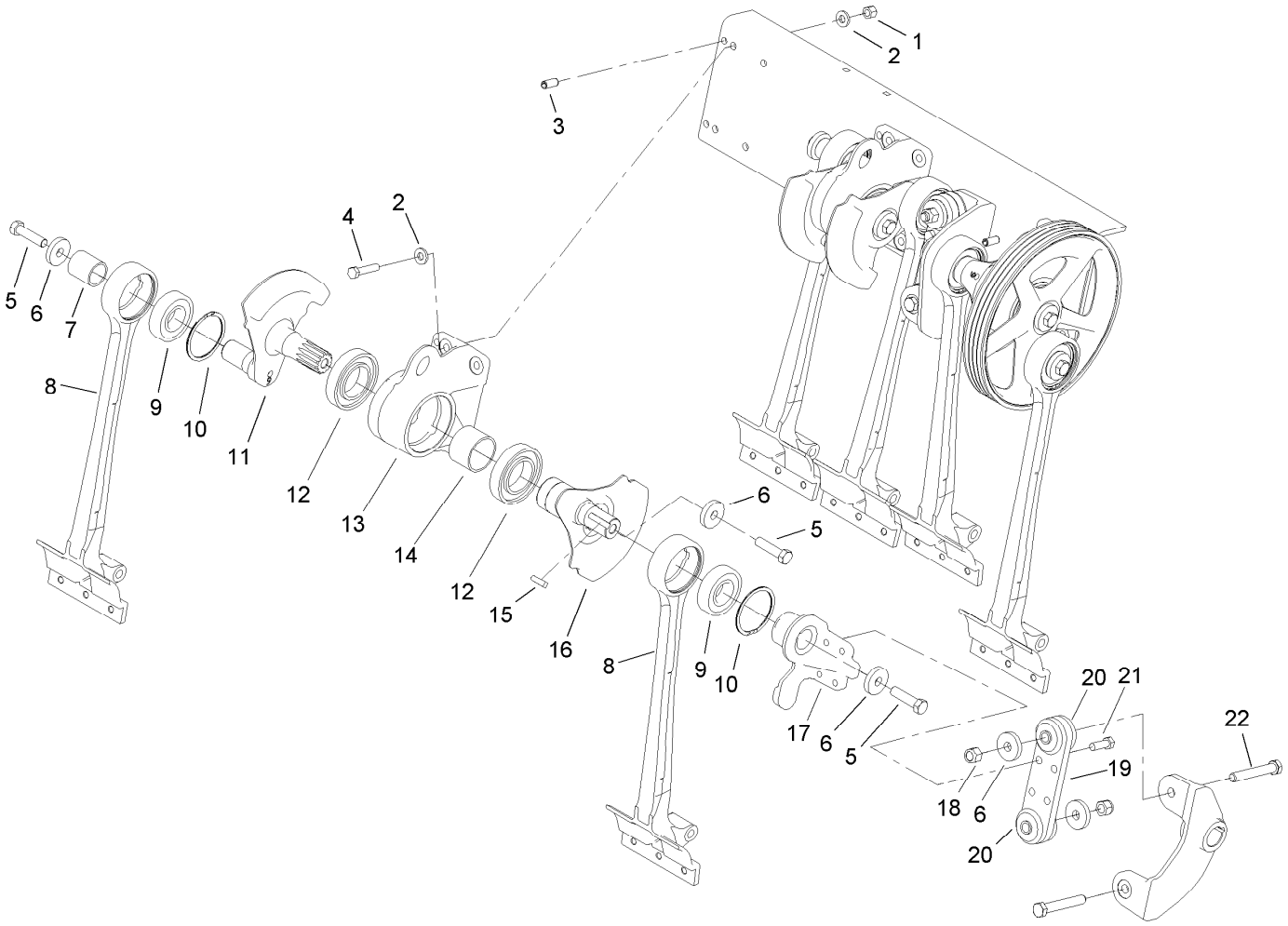


# Coring Head Crank No. 5 and 6 Assembly

| *Ref.* | *Part Number* | *Qty.* | *Description* |
|---|---|---|---|
| 1 | 3296-23 | 4 | Nut-Lock, NI |
| 2 | 107-3395 | 8 | Washer-Hardened |
| 3 | 105-1041 | 2 | Pin-Spring |
| 4 | 325-9 | 4 | Screw-HH |
| 5 | 327-7 | 3 | Screw-HH |
| 6 | 105-1016 | 5 | Washer-Flat |
| 7 | 105-1039 | 1 | Tube-Spacer |
| 8 | 106-8873 | 2 | Arm-Stomper |
| 9 | 106-8871 | 2 | Bearing-Ball |
| 10 | 106-8872 | 2 | Ring-Retaining |
| 11 | 105-0958 | 1 | Crankarm-No. 2, 4, 6 |
| 12 | 105-0965 | 2 | Bearing-Ball |
| 13 | 105-0956 | 1 | Housing-Bearing |
| 14 | 105-1017 | 1 | Spacer |
| 15 | 105-1089 | 1 | Key-Square |
| 16 | 105-0960 | 1 | Crankarm-No. 3, 5 |
| 17 | 105-0948 | 1 | Coupling-No. 5 |
| 18 | 3296-53 | 2 | Nut-Lock, NI |
| 19 | 105-0974-03 | 1 | Plate-Coupling |
| 20 | 105-0963 | 2 | Mount-ISO, Crank |
| 21 | 325-6 | 4 | Screw-HH |
| 22 | 327-29 | 2 | Screw-HH |

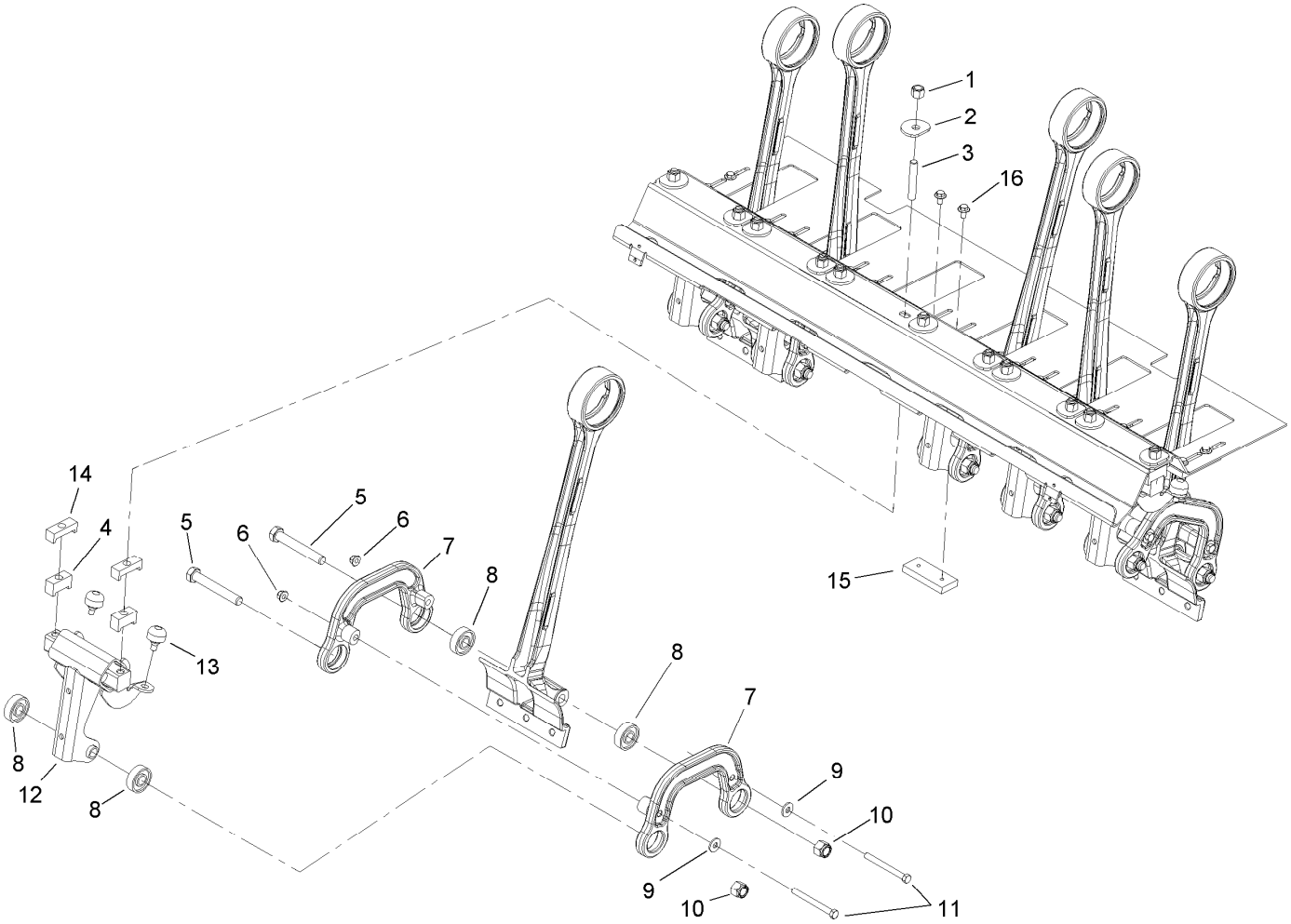


# Coring Head Roto Link Assembly

| *Ref.* | *Part Number* | *Qty.* | *Description* |
|---|---|---|---|
| 1 | 32128-23 | 12 | Nut-HF |
| 2 | 107-7543 | 12 | Washer-Hardened |
| 3 | 105-1088 | 12 | Stud |
| 4 | 105-0999 | 12 | Standoff-Damper V |
| 5 | 327-29 | 12 | Screw-HH |
| 6 | 104-8301 | 12 | Nut-HF, NI |
| 7 | 105-1000 | 12 | Link-Damper |
| 8 | 251-311 | 24 | Bearing-Ball |
| 9 | 80-6990 | 12 | Washer-Hardened |
| 10 | 3296-53 | 12 | Nut-Lock, NI |
| 11 | 323-42 | 12 | Screw-HH |
| 12 | 106-8922 | 6 | Damper |
| 13 | 87-2440 | 12 | Bumper-Rubber |
| 14 | 107-7582 | 12 | Spacer-Damper, Top V |
| 15 | 107-7584 | 7 | Plate-Bumper V |
| 16 | 3234-7 | 14 | Screw-HHF |

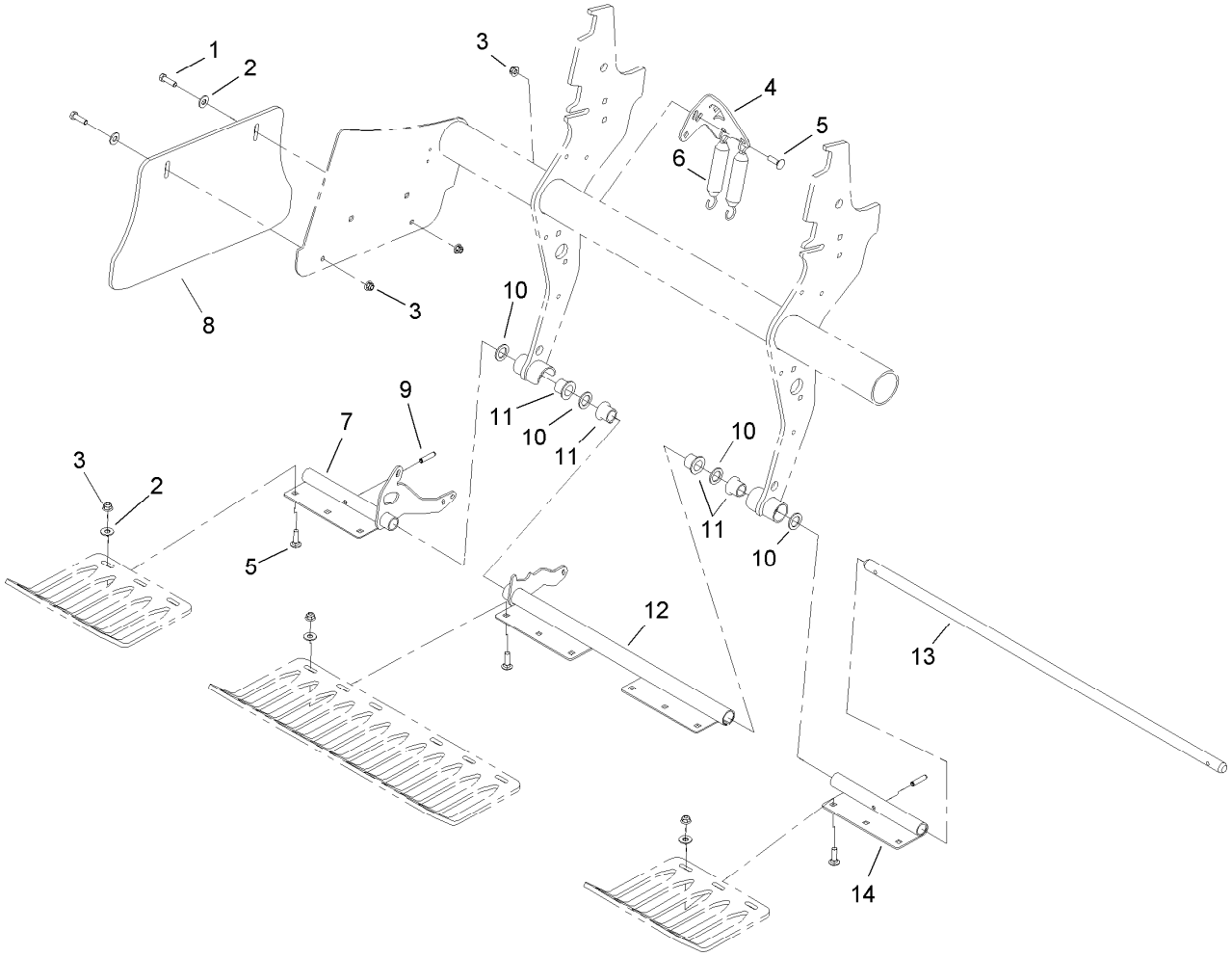


# Coring Head Turf Guard Assembly

| *Ref.* | *Part Number* | *Qty.* | *Description* |
|---|---|---|---|
| 1 | 323-7 | 4 | Screw-HH |
| 2 | 3256-4 | 14 | Washer-Flat |
| 3 | 104-8301 | 18 | Nut-HF, NI |
| 4 | 105-1120-03 | 1 | Arm-Spring |
| 5 | 3231-25 | 14 | Bolt-CARR |
| 6 | 66-4270 | 2 | Spring-Extension |
| 7 | 105-1020-03 | 1 | LH Guard Bracket ASM |
| 8 | 105-1069 | 2 | Shield-Side |
| 9 | 32121-25 | 2 | Pin-Roll |
| 10 | 3-7898 | 4 | Washer-Thrust |
| 11 | 107-7581 | 4 | Bushing-Flange, Keyed |
| 12 | 105-1028-03 | 1 | Center Guard Bracket ASM |
| 13 | 105-1024 | 1 | Shaft-Guard, Turf |
| 14 | 105-1019-03 | 1 | RH Guard Bracket ASM |

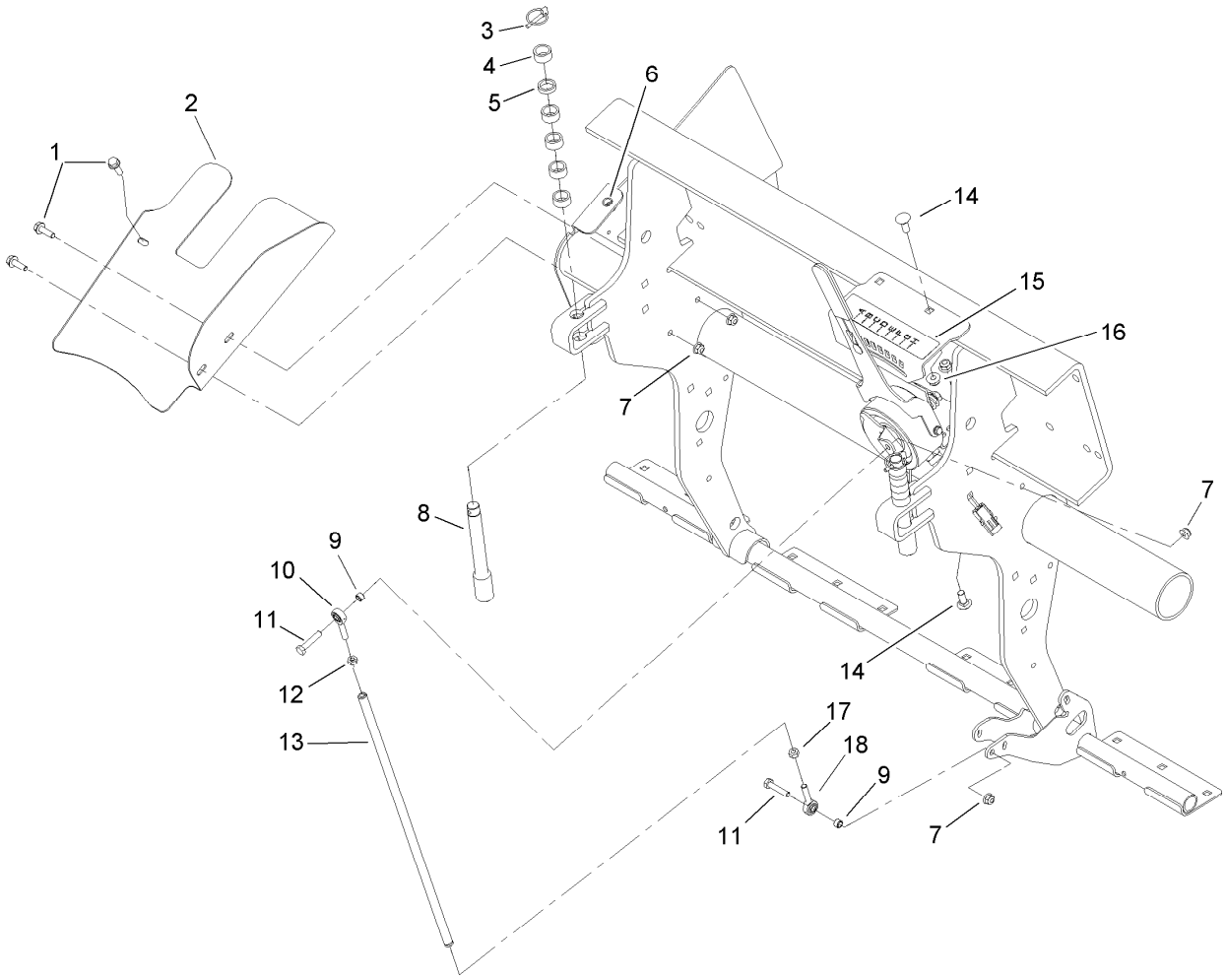


# Depth Control Assembly

| Ref. | Part Number | Qty. | Description |
|---|---|---|---|
| 1 | 3234-17 | 3 | Screw-HHF |
| 2 | 105-1092-01 | 1 | Shield-Top, Belt |
| 3 | 3290-495 | 2 | Pin-Klik |
| 4 | 74-3730 | 10 | Spacer-Spindle, Rear |
| 5 | 105-3828 | 2 | Spacer |
| 6 | 32148-7 | 1 | Nut-Clinch |
| 7 | 104-8300 | 4 | Nut-HF, NI |
| 8 | 105-1004 | 2 | Pin-Stop, Depth |
| 9 | 92-3133 | 2 | Spacer-Lever, Traction |
| 10 | 2411-52 | 1 | Bearing-Rod End, RH |
| 11 | 322-7 | 2 | Screw-HH |
| 12 | 3220-2 | 1 | Nut-Jam |
| 13 | 105-1067 | 1 | Tube-Control, Depth |
| 14 | 3231-2 | 4 | Bolt-CARR |
| 15 | 106-8853 | 1 | Decal-Control, Depth |
| 16 | 104-8301 | 4 | Nut-HF, NI |
| 17 | 3220-20 | 1 | Nut-Jam |
| 18 | 2411-53 | 1 | Bearing-Rod End, LH |

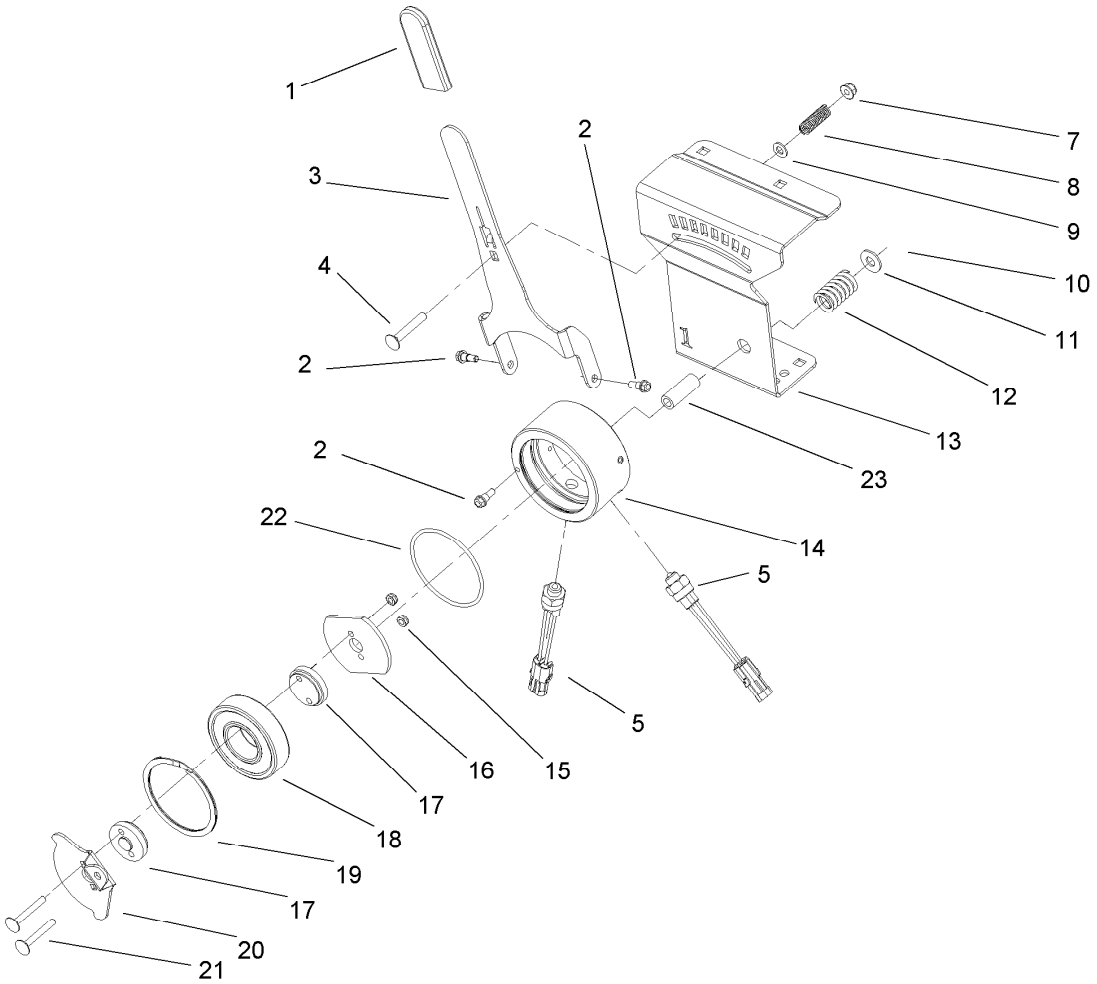


# Depth Actuator Assembly

| Ref. | Part Number | Qty. | Description |
|---|---|---|---|
| 1 | 21-1880 | 1 | Grip-Handle |
| 2 | 42-3560 | 3 | Bolt-Shoulder |
| 3 | 106-8860-03 | 1 | Arm-Control, Depth |
| 4 | 3230-6 | 1 | Bolt-CARR |
| 5 | 72-4320 | 2 | Switch-Ball |
| 7 | 104-8300 | 1 | Nut-HF, NI |
| 8 | 95-1821 | 1 | Spring-Compression |
| 9 | 3256-23 | 1 | Washer-Plain |
| 10 | 323-4 | 1 | Screw-HH |
| 11 | 3256-4 | 1 | Washer-Flat |
| 12 | 66-9010 | 1 | Spring-Compression |
| 13 | 106-8865-03 | 1 | Support-Control, Depth |
| 14 | 108-2129 | 1 | Housing-Control, Depth |
| 15 | 3296-56 | 2 | Nut-Lock, NI |
| 16 | 106-8864 | 1 | Actuator-Switch |
| 17 | 106-8863 | 2 | Spacer-Control, Depth |
| 18 | 106-8871 | 1 | Bearing-Ball |
| 19 | 106-8872 | 1 | Ring-Retaining |
| 20 | 106-8861-03 | 1 | Arm-Actuator, Switch |
| 21 | 3230-33 | 2 | Screw-CARR |
| 22 | 237-33 | 1 | O-Ring |
| 23 | 95-6448 | 1 | Spacer |

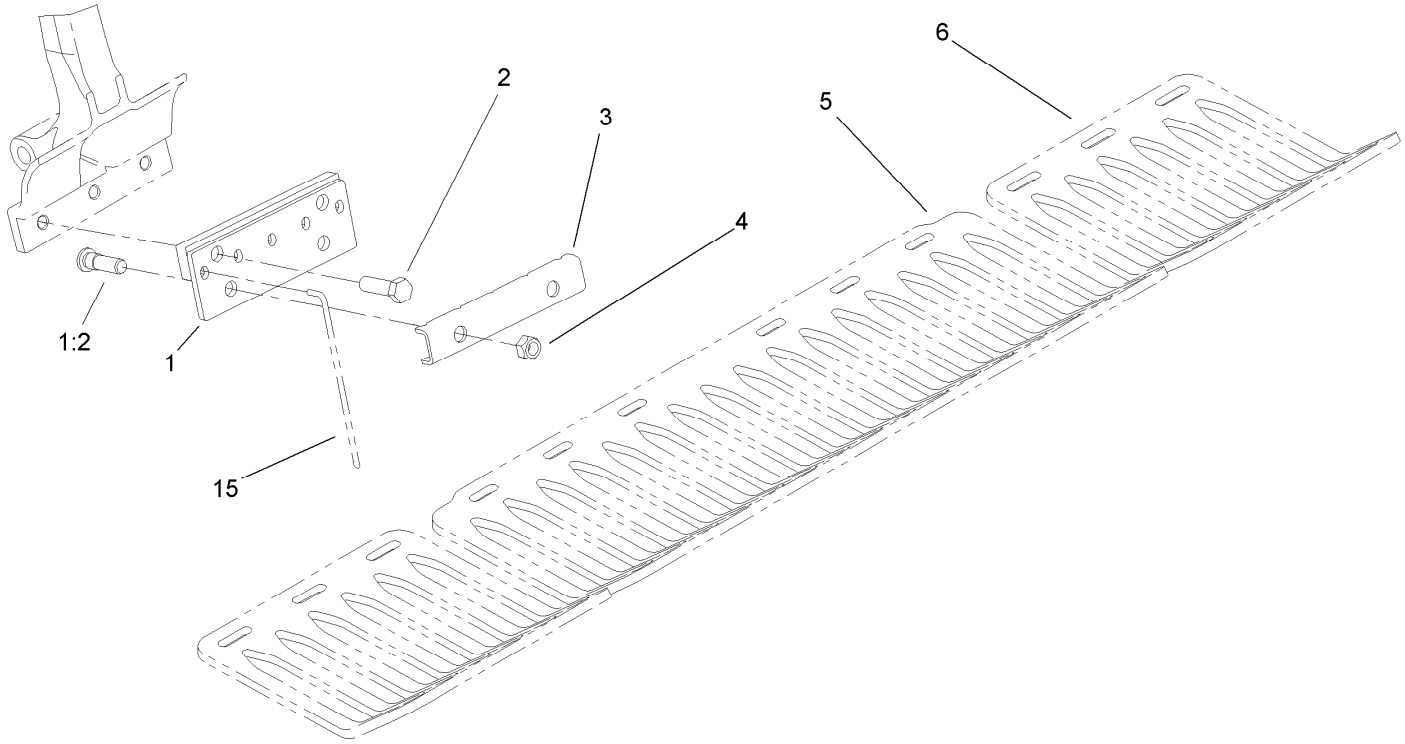


# Needle Tine Holder Model No. 09221 (Optional)

| *Ref.* | *Part Number* | *Qty.* | *Description* |
|---|---|---|---|
| 1 | 105-1099 | 6 | Needle Tine Holder ASM |
| 1:2 | 85-6540 | 2 | Stud-Drive |
| 2 | 325-7 | 12 | Screw-HH |
| 3 | 105-1098-03 | 6 | Clamp-Tine, Needle |
| 4 | 3296-19 | 12 | Nut-Hex |
| 5 | 105-1111 | 1 | Turfguard-Mini Tine, Long ● |
| 6 | 105-1110 | 2 | Turfguard-Mini Tine, Short ● |
| 15 | 100-3620 | 30 | Tine-Needle, 5Mm X 6.43 ● |
| 15 | 100-3621 | 30 | Tine-Needle, 8Mm X 7.38 ● |

● Optional Equipment

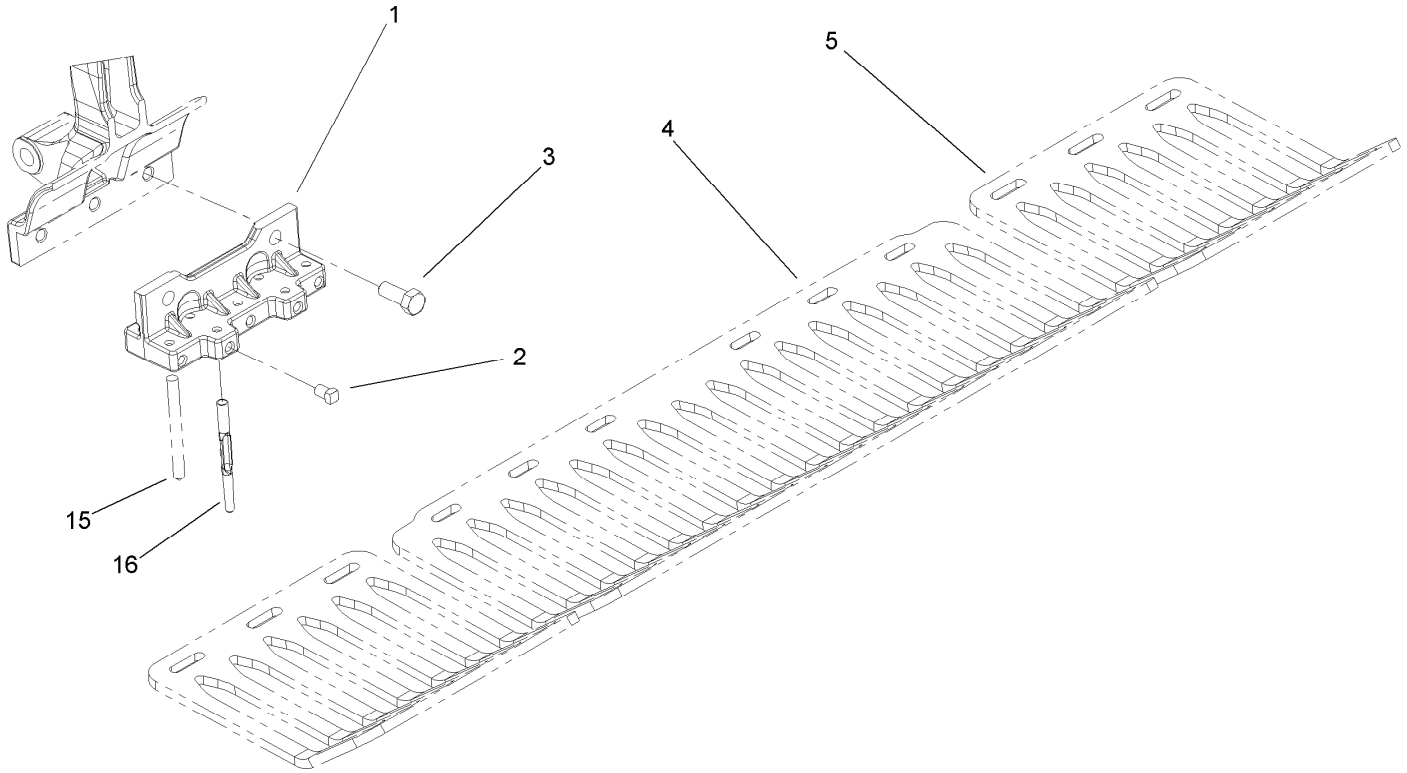


# Mini Tine Holder Model No. 09222 (Optional)

| *Ref.* | *Part Number* | *Qty.* | *Description* |
|---|---|---|---|
| 1 | 105-1184 | 6 | Tineholder |
| 2 | 3243-1 | 60 | Screw-Set |
| 3 | 325-5 | 12 | Screw-HH |
| 4 | 105-1111 | 1 | Turfguard-Mini Tine, Long ● |
| 5 | 105-1110 | 2 | Turfguard-Mini Tine, Short ● |
| 15 | 100-3622 | 60 | Tine-Solid, 3/8 X 5.00 ● |
| 16 | 106-8941 | 60 | Tine-Side Eject, 1/4 X 4.50 ● |
| 16 | 94-3417 | 60 | Tine-Side Eject, 5Mm X 4.38 ● |
| 16 | 100-3625 | 60 | Tine-Side Eject, 6Mm X 4.00 ● |

● Optional Equipment

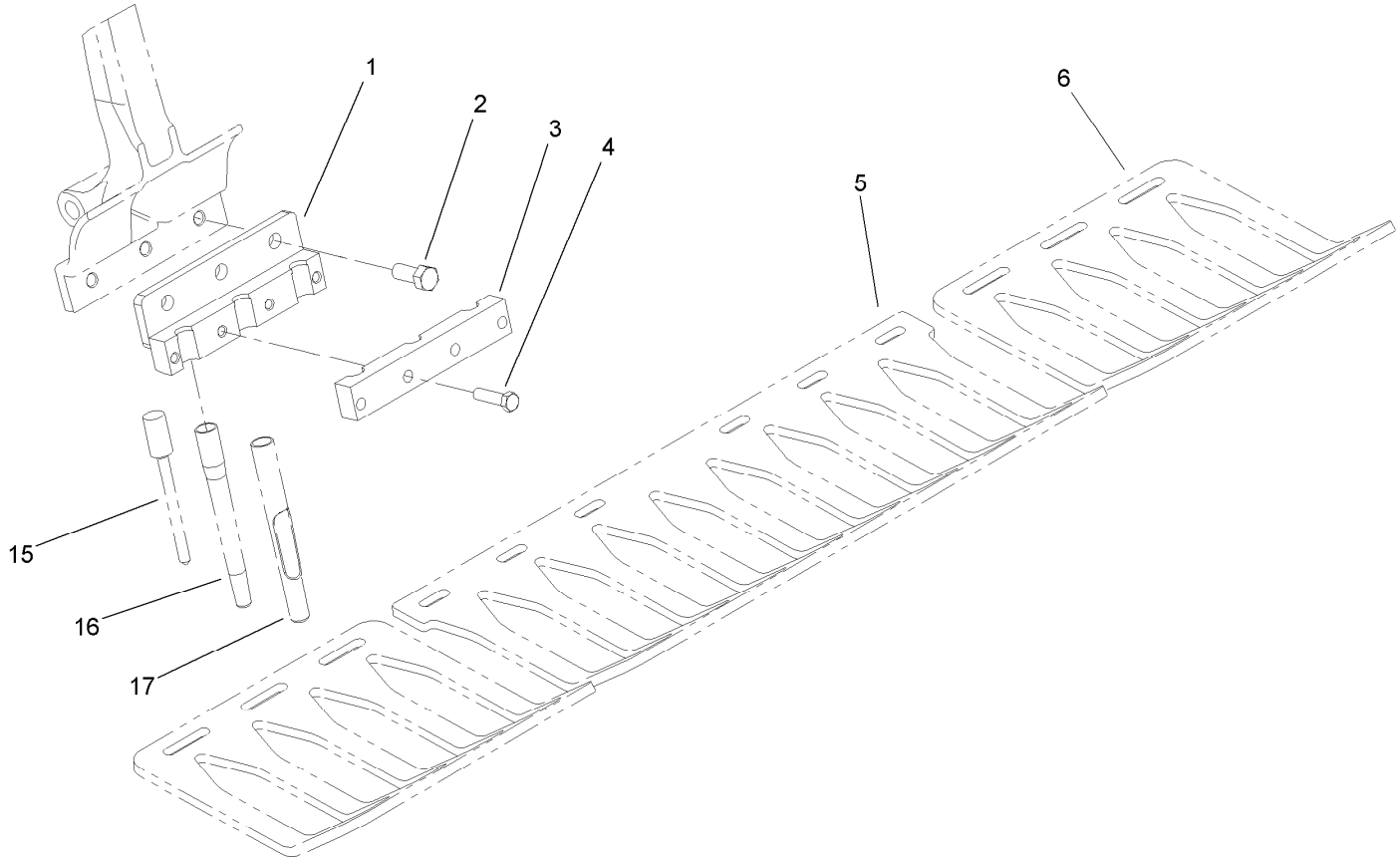


# Three Tine, 3/4in Holder Model No. 09223 (Optional)

| Ref. | Part Number | Qty. | Description |
|---|---|---|---|
| 1 | 105-1036-03 | 6 | 3 Tine Holder ASM |
| 2 | 325-5 | 18 | Screw-HH |
| 3 | 105-1038-03 | 6 | Clamp-Holder, 3 Tine |
| 4 | 323-8 | 24 | Screw-HH |
| 5 | 105-1107 | 1 | Turfguard-3 Tine, Long ● |
| 6 | 105-1106 | 2 | Turfguard-3 Tine, Short ● |
| 15 | 100-3630 | 18 | Tine-Solid, 16Mm X 6.38 ● |
| 15 | 100-3626 | 18 | Tine-Solid, 9Mm X 5.50 ● |
| 15 | 100-3627 | 18 | Tine-Solid, 10Mm X 6.38 ● |
| 15 | 100-3629 | 18 | Tine-Solid, 13Mm X 6.38 ● |
| 15 | 77-5320 | 18 | Tine-Solid, 5/16 X 3.25 ● |
| 16 | 100-3633 | 18 | Tine-Hollow, 3/8 X 4.75 ● |
| 16 | 105-1180 | 18 | Tine-Hollow, 1/2 X 6.50 ● |
| 16 | 106-8943 | 18 | Tine-Hollow, 5/8 X 6.50 ● |
| 16 | 59-3670 | 18 | Tine-Hollow, 5/8 X 4.75 ● |
| 16 | 100-3634 | 18 | Tine-Hollow, 1/2 X 5.50 ● |
| 16 | 59-3690 | 18 | Tine-Hollow, 3/8 X 4.75 ● |
| 16 | 59-9770 | 18 | Tine-Hollow, Lw 5/8 X 4.75 ● |
| 16 | 66-9140 | 18 | Tine-Hollow, 1/2 X 4.75 ● |
| 16 | 104-0984 | 18 | Tine-Hollow, 5/8 X 5.75 ● |
| 17 | 104-9875 | 18 | Tine-Side Eject, HD 3/4 X 5.75 ● |
| 17 | 104-9876 | 18 | Tine-Side Eject, HD 5/8 X 5.75 ● |
| 17 | 106-8947 | 18 | Tine-Side Eject, 1/2 X 6.50 ● |
| 17 | 107-7544 | 18 | Tine-Side Eject, 5/8 X 6.50 ● |

● Optional Equipment

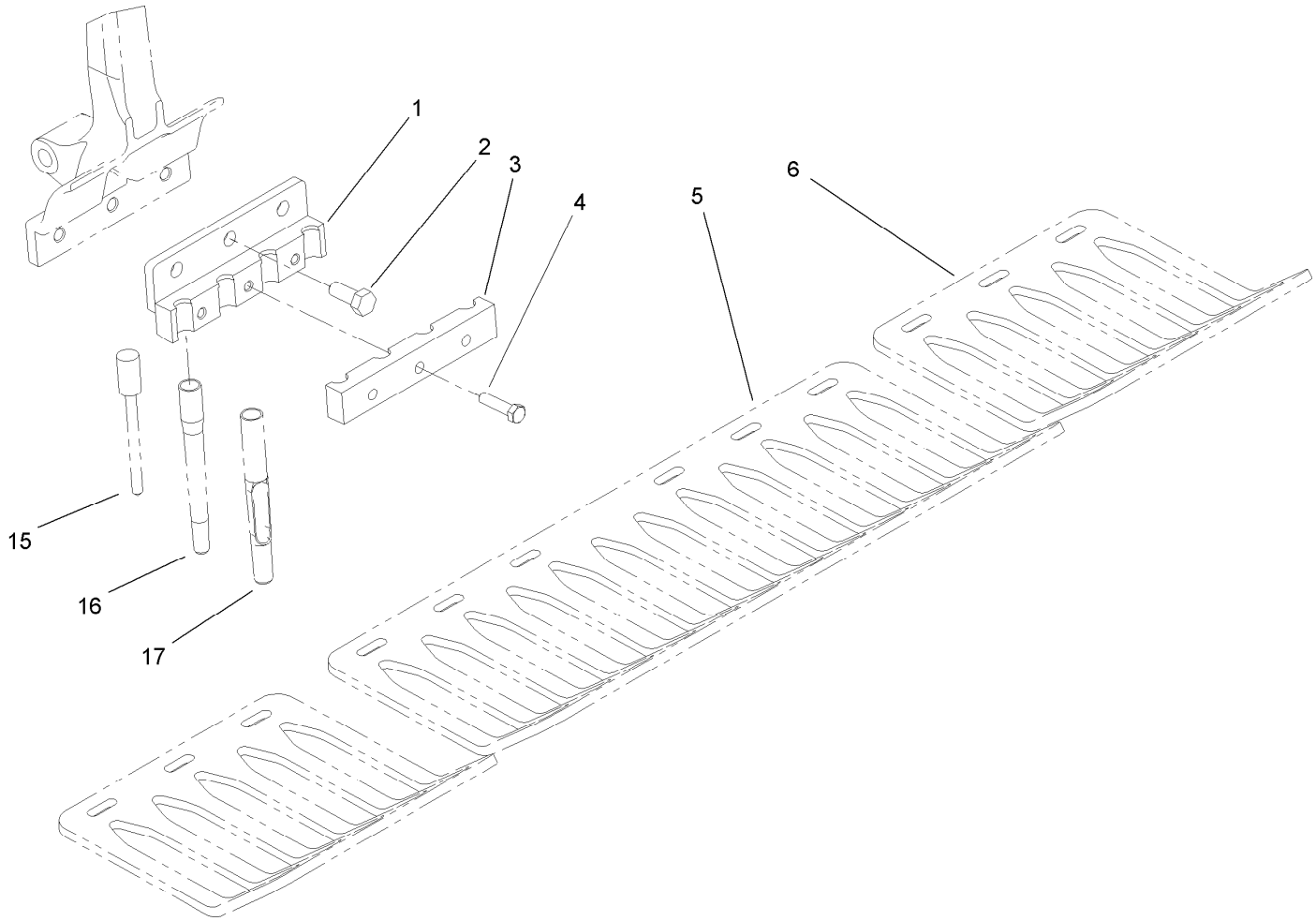


# Four Tine, 3/4in Holder Model No. 09224 (Optional)

| Ref. | Part Number | Qty. | Description |
|---|---|---|---|
| 1 | 105-1045-03 | 6 | 4 Tine Holder ASM |
| 2 | 325-5 | 18 | Screw-HH |
| 3 | 105-1032-03 | 6 | Clamp-Holder, 4 Tine |
| 4 | 323-8 | 18 | Screw-HH |
| 5 | 105-1105 | 1 | Turfguard-4 Tine, Long ● |
| 6 | 105-1104 | 2 | Turfguard-4 Tine, Short ● |
| 15 | 100-3629 | 24 | Tine-Solid, 13Mm X 6.38 ● |
| 15 | 100-3627 | 24 | Tine-Solid, 10Mm X 6.38 ● |
| 15 | 100-3626 | 24 | Tine-Solid, 9Mm X 5.50 ● |
| 15 | 100-3630 | 24 | Tine-Solid, 16Mm X 6.38 ● |
| 15 | 77-5320 | 24 | Tine-Solid, 5/16 X 3.25 ● |
| 16 | 100-3634 | 24 | Tine-Hollow, 1/2 X 5.50 ● |
| 16 | 104-0984 | 24 | Tine-Hollow, 5/8 X 5.75 ● |
| 16 | 105-1180 | 24 | Tine-Hollow, 1/2 X 6.50 ● |
| 16 | 106-8943 | 24 | Tine-Hollow, 5/8 X 6.50 ● |
| 16 | 100-3633 | 24 | Tine-Hollow, 3/8 X 4.75 ● |
| 16 | 66-9140 | 24 | Tine-Hollow, 1/2 X 4.75 ● |
| 16 | 59-9770 | 24 | Tine-Hollow, Lw 5/8 X 4.75 ● |
| 16 | 59-3690 | 24 | Tine-Hollow, 3/8 X 4.75 ● |
| 16 | 59-3670 | 24 | Tine-Hollow, 5/8 X 4.75 ● |
| 17 | 104-9875 | 24 | Tine-Side Eject, HD 3/4 X 5.75 ● |
| 17 | 104-9876 | 24 | Tine-Side Eject, HD 5/8 X 5.75 ● |
| 17 | 106-8947 | 24 | Tine-Side Eject, 1/2 X 6.50 ● |
| 17 | 107-7544 | 24 | Tine-Side Eject, 5/8 X 6.50 ● |

● Optional Equipment

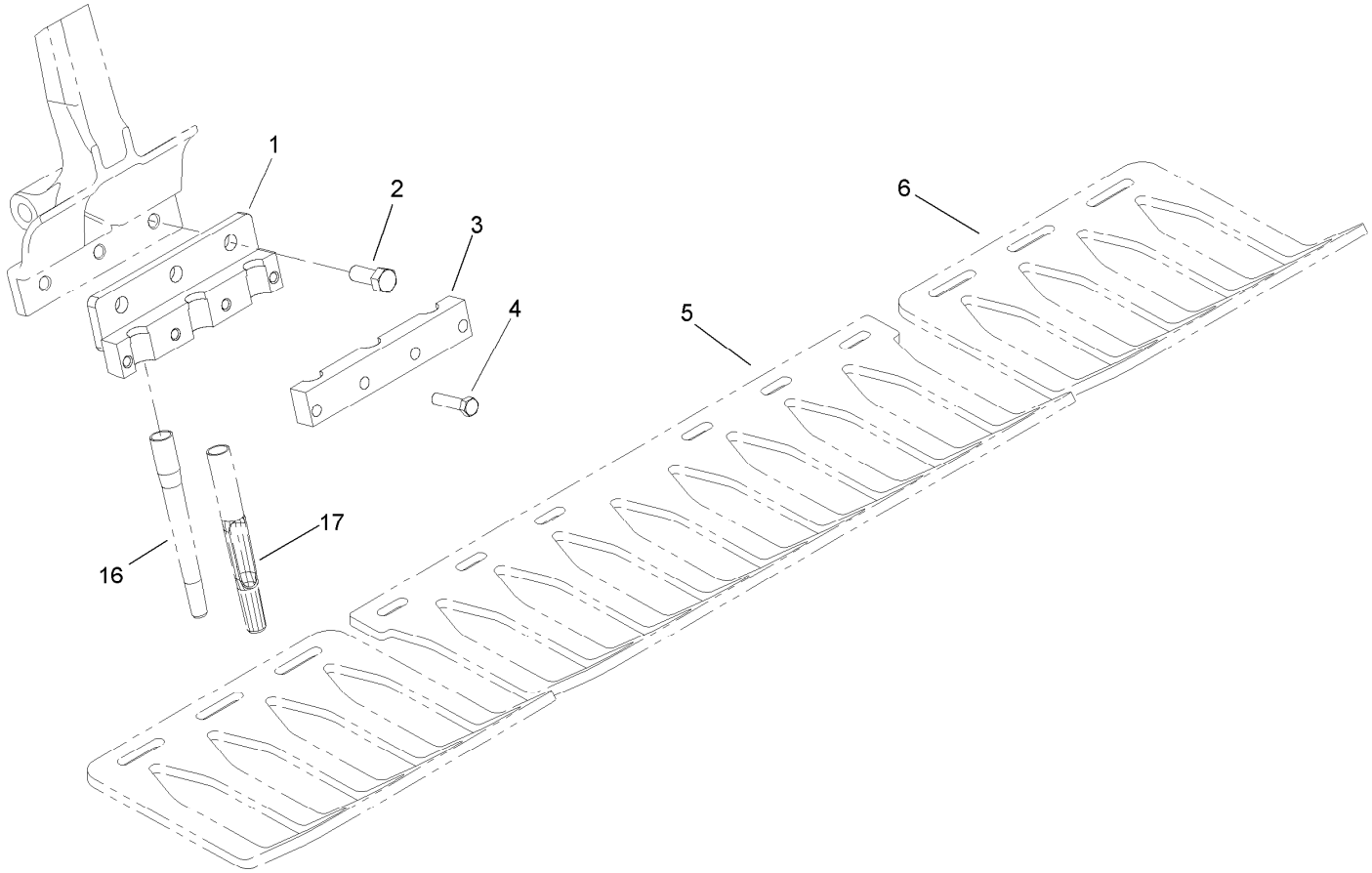


# Three Tine 7/8in Tine Holder Model No. 09226 (Optional)

| *Ref.* | *Part Number* | *Qty.* | *Description* |
|---|---|---|---|
| 1 | 108-2122-03 | 6 | Holder ASM |
| 2 | 325-5 | 18 | Screw-HH |
| 3 | 108-2124-03 | 6 | Clamp-Tine |
| 4 | 323-8 | 24 | Screw-HH |
| 5 | 105-1107 | 1 | Turfguard-3 Tine, Long ● |
| 6 | 105-1106 | 1 | Turfguard-3 Tine, Short ● |
| 16 | 86-9720 | 18 | Tine-Hollow, 3/4 X 5.75 ● |
| 16 | 62-4600 | 18 | Tine-Hollow, 3/4 X 4.75 ● |
| 17 | 92-7900 | 18 | Tine-Side Eject, 3/4 X 5.75 ● |
| 17 | 92-7941 | 18 | Tine-Side Eject, 3/4 X 4.75 ● |
| 17 | 104-9877 | 18 | Tine-Side Eject, 7/8 X 5.75 ● |

● Optional Equipment

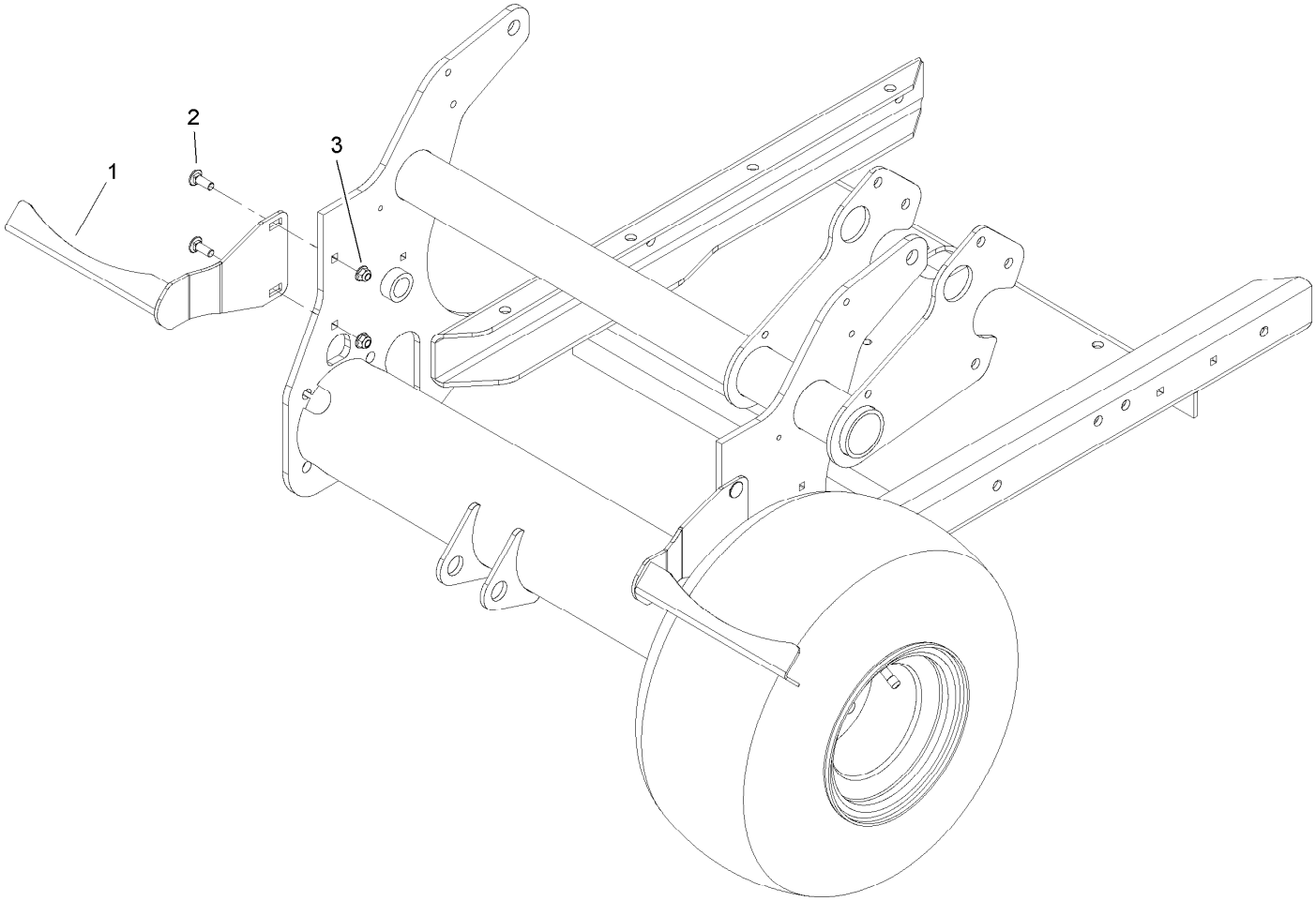


# Tire Scraper Model No. 09225 (Optional)

| *Ref.* | *Part Number* | *Qty.* | *Description* |
|---|---|---|---|
| 1 | 107-7531-03 | 2 | Scraper-Wheel |
| 2 | 3231-26 | 4 | Screw-CARR |
| 3 | 104-8301 | 4 | Nut-HF, NI |

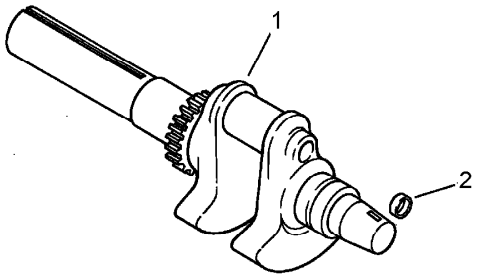


# Crankshaft Assembly
# Kohler CH23S 76585

| Ref. | Part Number | Qty. | Description |
|---|---|---|---|
| 1 | 24 014 72-S | 1 | Crankshaft ASM (Includes 2) ● |
| 2 | 52 139 09-S | 1 | Plug-Cup ● |

● Obtain parts from www.kohlerplus.com

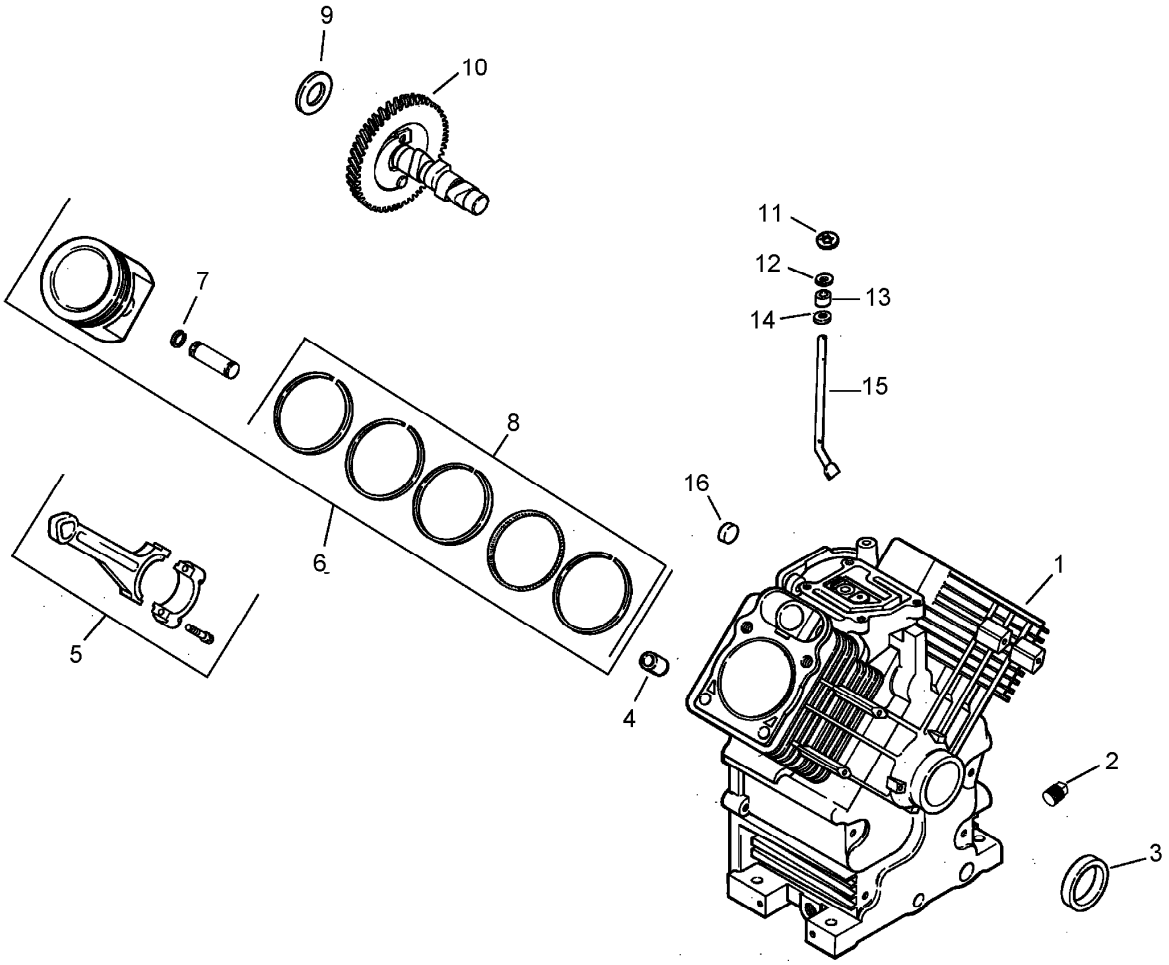


# Crankcase Assembly
# Kohler CH23S 76585

| Ref. | Part Number | Qty. | Description |
|---|---|---|---|
| 1 | | 1 | Crankcase (Use: Short Block Or Miniblock) ● ■ |
| 2 | 25 139 57-S | 2 | Plug-Pipe, Sq HD (3/8) ■ |
| 3 | 24 032 01-S | 1 | Seal-Oil ■ |
| 4 | 24 380 13-S | 6 | Pin-Locating ■ |
| 5 | 24 067 13-S | 2 | Rod-Connecting (Standard) ■ |
| 5 | 24 067 14-S | 2 | Rod-Connecting (.25) ■ |
| 6 | 24 874 09-S | 2 | Piston W/Ring Set (Std.) (Includes 7, 8) ■ |
| 6 | 24 874 15-S | 2 | Piston W/Ring Set (.08) (Includes 7, 8) ■ |
| 6 | 24 874 10-S | 2 | Piston W/Ring Set (.25) (Includes 7, 8) ■ |
| 6 | 24 874 11-S | 2 | Piston W/Ring Set (.50) (Includes 7, 8) ■ |
| 7 | 24 018 01-S | 4 | Retainer-Pin, Piston ■ |
| 8 | 24 108 08-S | 2 | Ring Set (STD And .08) ■ |
| 8 | 24 108 09-S | 2 | Ring Set (.25) ■ |
| 8 | 24 108 10-S | 2 | Ring Set (.50) ■ |
| 9 | 12 422 09-S | 1 | Shim-Camshaft (Red .032) ■ |
| 9 | 12 422 13-S | 1 | Shim-Camshaft (Black .04) ■ |
| 9 | 12 422 07-S | 1 | Shim-Camshaft (White .028) ■ |
| 9 | 12 422 08-S | 1 | Shim-Camshaft (Blue .03) ■ |
| 9 | 12 422 10-S | 1 | Shim-Camshaft (Yellow .034) ■ |
| 9 | 12 422 11-S | 1 | Shim-Camshaft (Green .036) ■ |
| 9 | 12 422 12-S | 1 | Shim-Camshaft (Gray .038) ■ |
| 10 | 24 012 10-S | 1 | Camshaft Kit ■ |
| 11 | 24 018 09-S | 1 | Retainer-Ring ■ |
| 12 | M-931010-S | 1 | Washer-Flat (9Mm) ■ |
| 13 | 28 032 09-S | 1 | Seal-Cross Shaft, Governor ■ |
| 14 | 24 468 15-S | 1 | Washer-Flat (11/32) ■ |
| 15 | 24 144 38-S | 1 | Shaft-Cross, Governor ■ |
| 16 | 52 139 09-S | 1 | Plug-Cup ■ |

● Not serviced separately

■ Obtain parts from www.kohlerplus.com

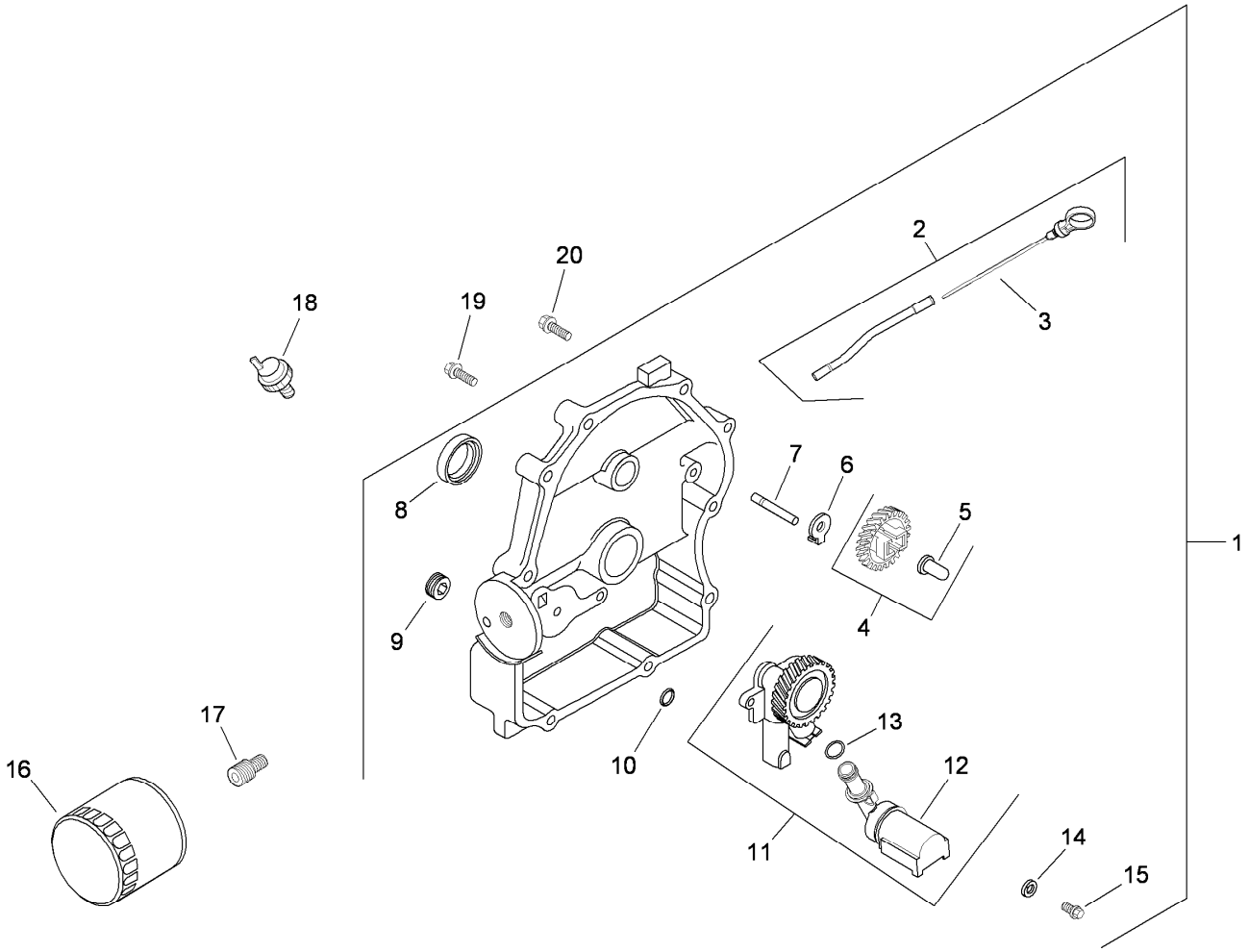


# Oil Pan and Lubrication Assembly
# Kohler CH23S-76585

| Ref. | Part Number | Qty. | Description |
|---|---|---|---|
| 1 | 54 009 01-S | 1 | Closure Plate ASM (Includes 2-15) ■ |
| 2 | 24 755 121-S | 1 | Dipstick And Tube ASM (Includes 3) ■ |
| 3 | 24 038 10-S | 1 | Dipstick ■ |
| 4 | 24 043 12-S | 1 | Governor Gear ASM (Includes 5) ■ |
| 5 | 12 380 01-S | 1 | Pin-Regulating, Governor ■ |
| 6 | 24 448 02-S | 1 | Tab-Locking ■ |
| 7 | 12 144 02-S | 1 | Shaft-Gear, Governor ■ |
| 8 | 52 032 08-S | 1 | Seal-Oil (P-T-O End) ■ |
| 9 | 25 139 60-S | 1 | Plug-Pipe, Countersunk (1/8) ■ |
| 10 | 24 153 08-S | 1 | O-Ring ■ |
| 11 | 24 393 37-S | 1 | Oil Pump ASM (Includes 12, 13) ■ |
| 12 | 24 381 04-S | 1 | Tube-Pick Up, Oil ■ |
| 13 | 24 153 01-S | 1 | O-Ring ■ |
| 14 | M-631005-S | 2 | Washer-Flat (6 Mm) ■ |
| 15 | M-645025-S | 2 | Screw-Flange, Thread Forming (M6X1.0X25) ■ |
| 16 | 12 050 01-S | 1 | Filter-Oil ■ |
| 17 | 24 136 01-S | 1 | Nipple-Filter, Oil ■ |
| 18 | 25 099 24-S | 1 | Switch-Pressure ■ |
| 19 | 24 086 16-S | 9 | Screw-HF (M8X1.25X45) ■ |
| 20 | 24 086 17-S | 1 | Screw-Flange (M8X1.25X45) ■ |
| | 25 113 05-S | 1 | Decal-Sentry, Oil ● ■ |

● Not illustrated

■ Obtain parts from www.kohlerplus.com

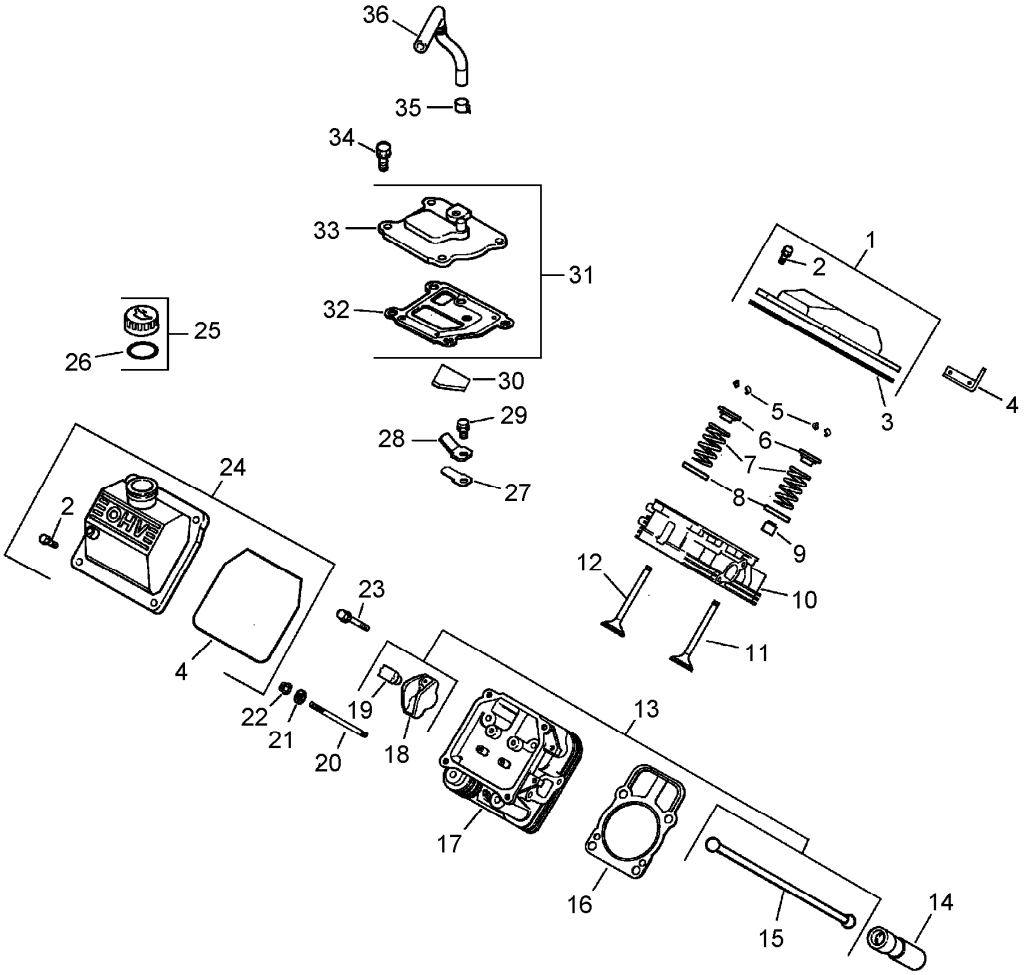


# Head / Valve / Breather Assembly
# Kohler CH23S 76585

| Ref. | Part Number | Qty. | Description |
|---|---|---|---|
| 1 | 24 755 141-S | 1 | Plain Valve Cover Kit (Includes 2-3) ● |
| 2 | M-651030-S | 4 | Screw-Flange (M6X1.0X30) ● |
| 3 | 24 153 28-S | 1 | O-Ring ● |
| 4 | 24 445 01-S | 1 | Strap-Lifting ● |
| 5 | 12 755 03-S | 4 | Retainer Kit ● |
| 6 | 12 173 01-S | 4 | Cap-Spring, Valve ● |
| 7 | 24 089 02-S | 4 | Spring-Valve ● |
| 8 | 235011-S | 4 | Retainer-Spring ● |
| 9 | 66 032 05-S | 2 | Seal-Stem, Valve ● |
| 10 | 24 318 68-S | 1 | No. 1 Cylinder Head ASM ● |
| 11 | 24 017 01-S | 2 | Valve-Intake (STD) ● |
| 11 | 24 017 02-S | 2 | Valve-Intake (.25) ● |
| 12 | 24 016 01-S | 2 | Valve-Exhaust (STD) ● |
| 12 | 24 016 02-S | 2 | Valve-Exhaust (.25) ● |
| 13 | 24 755 66-S | 1 | Valve Train Kit (Includes 15, 18-19) ● |
| 14 | 25 351 01-S | 4 | Lifter-Valve ● |
| 15 | 24 411 05-S | 4 | Rod-Push ● |
| 16 | 24 841 02-S | 2 | Cylinder Head Gasket Kit (Includes 21-22) ● |
| 17 | 24 318 71-S | 1 | No. 2 Cylinder Head ASM ● |
| 18 | 25 186 01-S | 4 | Arm-Rocker ● |
| 19 | 24 599 01-S | 4 | Pivot-Arm, Rocker ● |
| 20 | 24 072 09-S | 8 | Stud (M8X1.25Xm10X1.5X105Mm) ● |
| 21 | 24 468 16-S | 8 | Washer-Flat (8.6 Mm) ● |
| 22 | 24 100 10-S | 8 | Nut-Flange (M8X1.25) ● |
| 23 | 66 086 07-S | 4 | Screw ● |
| 24 | 24 755 140-S | 1 | Oil Fill Valve Cover Kit (Includes 2-3) ● |
| 25 | 25 755 13-S | 1 | Oil Fill Cap Kit (Includes 26) ● |
| 26 | 25 153 02-S | 1 | O-Ring ● |
| 27 | 24 402 03-S | 1 | Reed-Breather ● |
| 28 | 66 018 04-S | 1 | Retainer-Reed ● |
| 29 | M-545010-S | 1 | Screw-HHFTF (M5X.80X10) ● |
| 30 | 24 050 01-S | 1 | Filter-Breather ● |
| 31 | 24 033 01-S | 1 | Breather Kit (Includes 32-33) ● |
| 32 | 24 041 51-S | 1 | Gasket-Breather ● |
| 33 | 24 096 86-S | 1 | Cover-Breather ● |

● Obtain parts from www.kohlerplus.com

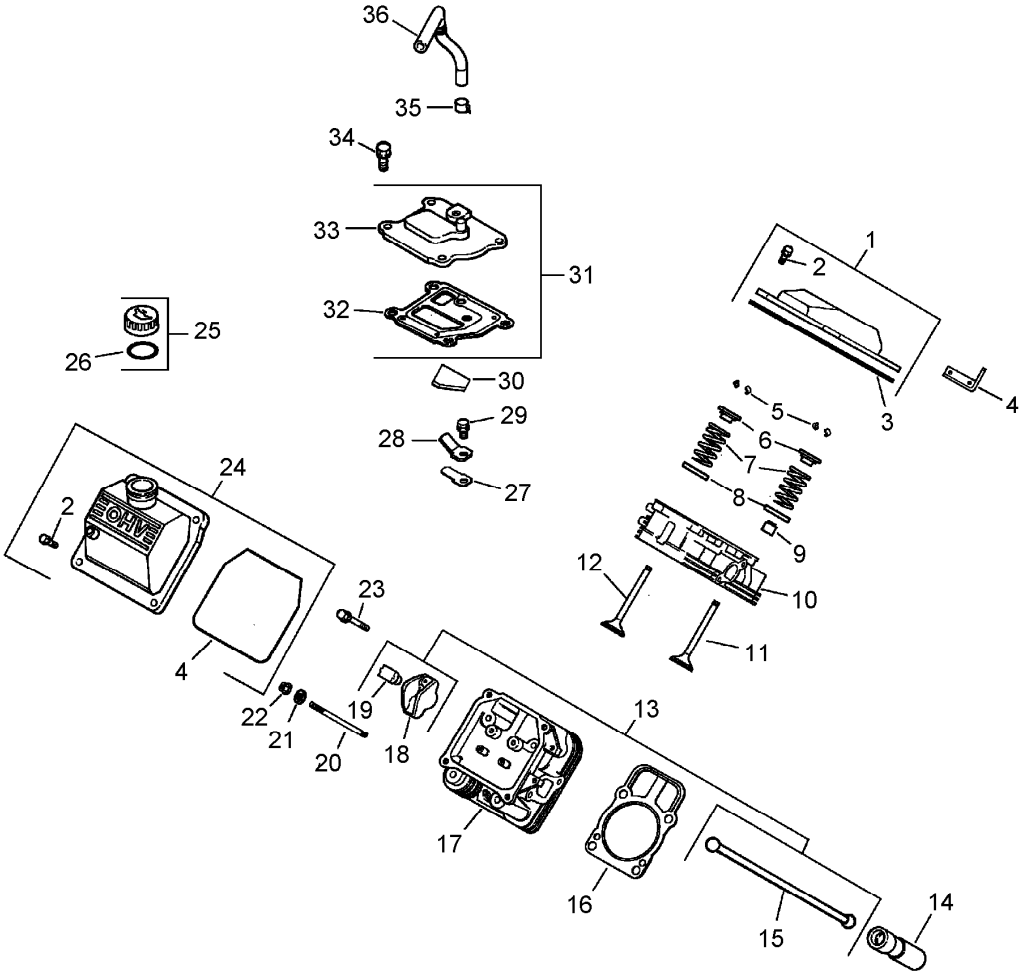


# Head / Valve / Breather Assembly
# Kohler CH23S 76585 (continued)

| Ref. | Part Number | Qty. | Description |
|---|---|---|---|
| 34 | M-645020-S | 4 | Screw-HHFTF (M6X1.0X20) ● |
| 35 | 25 237 14-S | 1 | Clamp-Hose, Spring (1/2) ● |
| 36 | 24 326 26-S | 1 | Hose-Breather ● |

● Obtain parts from www.kohlerplus.com

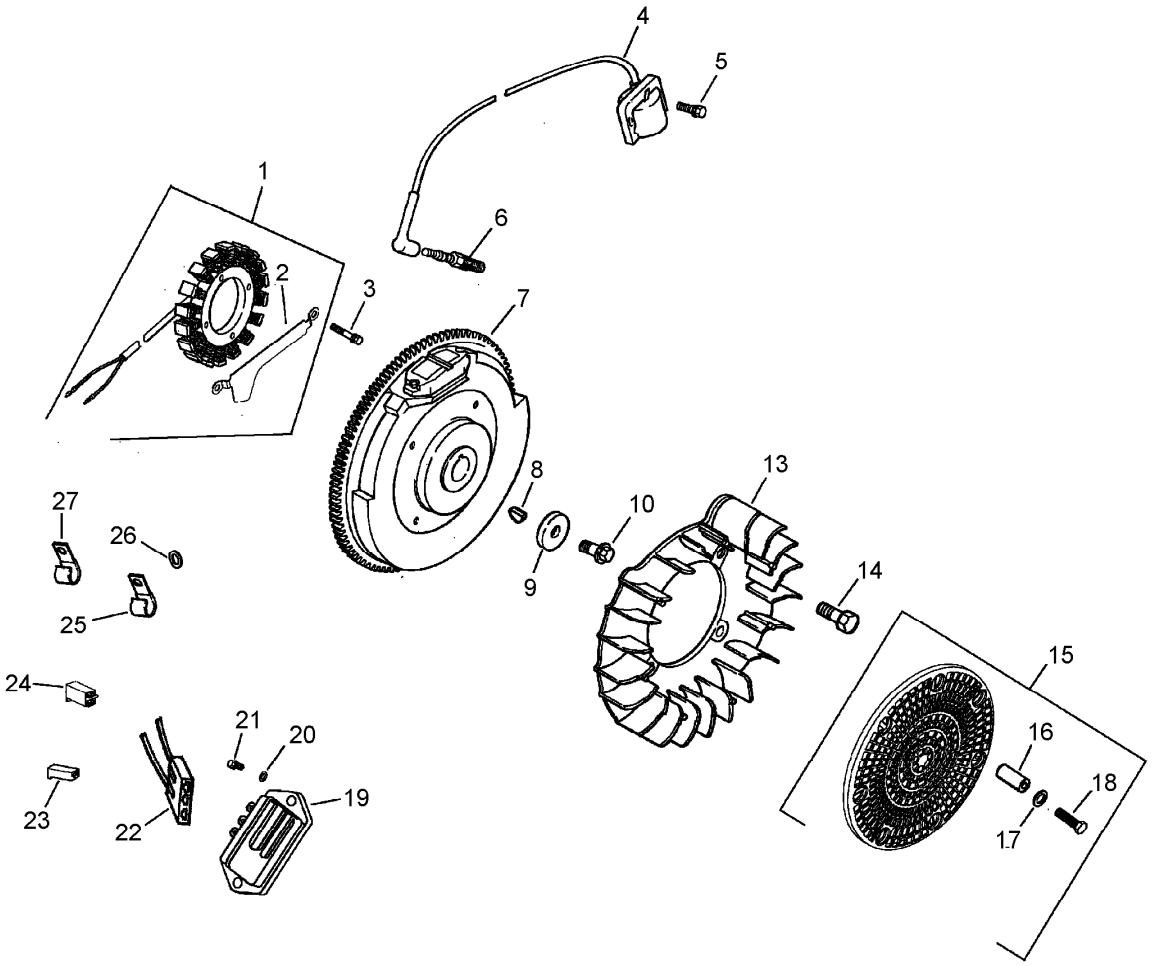


# Ignition / Electrical Assembly
# Kohler CH23S 76585

| Ref. | Part Number | Qty. | Description |
|---|---|---|---|
| 1 | 54 755 09-S | 1 | 15 Amp Stator Kit (Includes 2) ■ |
| 2 | 24 126 71-S | 1 | Bracket-Wire, Stator ■ |
| 3 | M-548025-S | 2 | Screw-Thread Forming (M5X0.8X25) ■ |
| 4 | 24 584 01-S | 2 | Module-Ignition ■ |
| 5 | M-545020-S | 4 | Screw-Flange, Thread Forming (M5X.8X20) ■ |
| 6 | 25 132 12-S | 2 | Spark Plug (Pro Series) ■ |
| 7 | 24 025 01-S | 1 | Flywheel ■ |
| 8 | X-42-15-S | 1 | Key (3/16 X 5/8) ■ |
| 9 | 12 468 03-S | 1 | Washer-Flat (13/32) ■ |
| 10 | 12 086 14-S | 1 | Screw-Flange (M10X1.5X45) ■ |
| 13 | 24 157 07-S | 1 | Fan ■ |
| 14 | 25 086 47-S | 4 | Bolt-Shoulder (M6X1.0X16) ■ |
| 15 | 54 755 15-S | 1 | Grass Screen Kit (Includes 16-18 & 24 113 18-S) ■ |
| 16 | 24 112 04-S | 4 | Spacer ■ |
| 17 | X-25-92-S | 4 | Washer-Flat (.188) ■ |
| 18 | M-403025-S | 4 | Screw-Slotted Head (M4X0.7X25) ■ |
| 19 | 41 403 09-S | 1 | Rectifier-Regulator ■ |
| 20 | X-25-92-S | 3 | Washer-Flat (.188) ■ |
| 21 | 24 086 18-S | 2 | Screw-Phl HD (11-16X.88) ■ |
| 22 | 277563-S | 1 | Connector (1 Contact) ■ |
| 23 | 41 155 03-S | 1 | Connector ■ |
| 24 | 235173-S | 1 | Clip-Cable ■ |
| 25 | X-25-63-S | 1 | Washer-Flat (1/4) ■ |
| 26 | 48 154 02-S | 1 | Clip-Cable ■ |
| | 24 126 37-S | 1 | Bracket-Strap, Ground ● ■ |
| | 25 086 91-S | 2 | Screw-Wsh HD Tap (8-18X.50) ● ■ |
| | 24 176 08-S | 1 | Harness-Wiring ● ■ |
| | 24 176 49-S | 1 | Harness-Wiring (Includes 18-19) ● ■ |
| | 25 454 03-S | 2 | Tie-Wire ● ■ |
| | 24 113 18-S | 1 | Decal-Screen, Grass ● ■ |

● Not illustrated

■ Obtain parts from www.kohlerplus.com

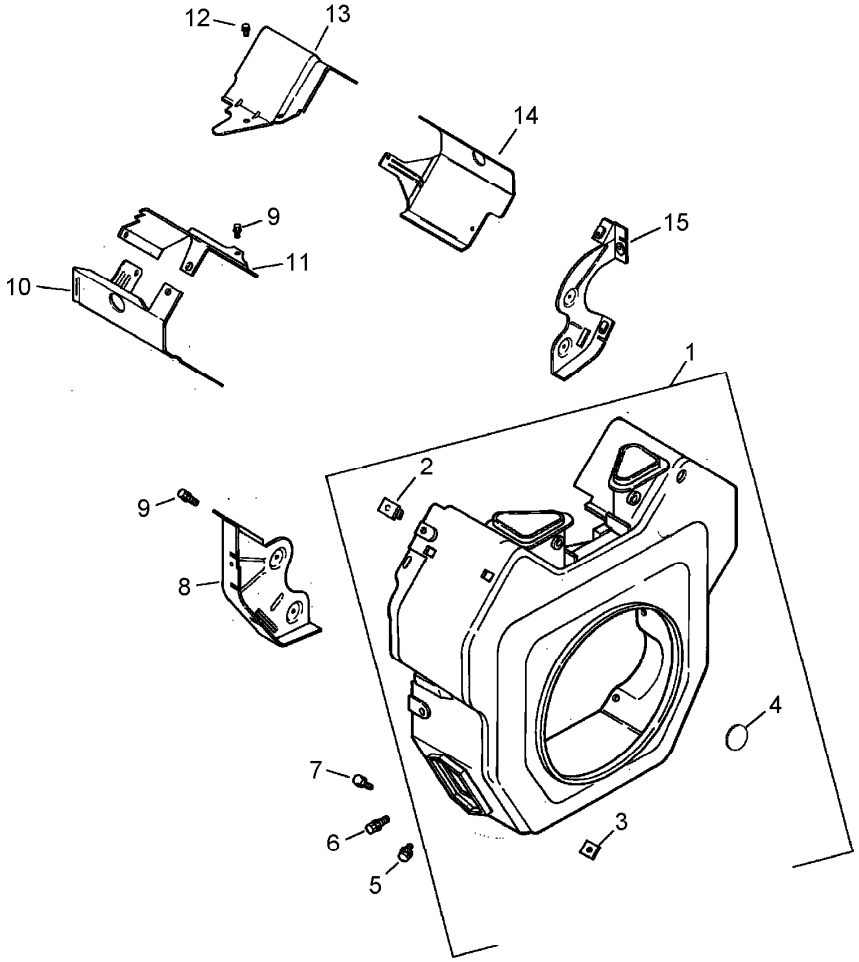


# Blower Housing and Baffle Assembly Kohler CH23S 76585

| Ref. | Part Number | Qty. | Description |
|---|---|---|---|
| 1 | 24 027 175-S | 1 | Blower Housing ASM (Includes 2-4) ■ |
| 2 | 24 100 01-S | 3 | Nut-Plastic ■ |
| 3 | 24 100 02-S | 2 | Nut-Plastic ■ |
| 4 | 25 139 16-S | 1 | Plug-Button (9/16) ■ |
| 5 | M-551016-S | 1 | Screw-Hex Flange, Heavy (M5X0.8X16) ■ |
| 6 | M-545016-S | 3 | Screw-Flange, Thread Forming (M5X0.8X16) ■ |
| 7 | M-545020-S | 4 | Screw-Flange, Thread Forming (M5X.8X20) ■ |
| 8 | 24 146 16-S | 1 | Plate-Backing (No. 2 Side) ■ |
| 9 | M-645016-S | 6 | Screw-Flange, Thread Forming (M6X1.0X16) ■ |
| 10 | 24 063 20-S | 1 | Baffle-Barrel, Cylinder (No. 2 Side) ■ |
| 11 | 24 063 17-S | 1 | Baffle-Valley (No. 2 Side) ■ |
| 12 | M-545010-S | 2 | Screw-HHFTF (M5X.80X10) ■ |
| 13 | 24 063 59-S | 1 | Baffle-Valley (No. 1 Side) ■ |
| 14 | 24 063 58-S | 1 | Baffle-Barrel, Cylinder (No. 1 Side) ■ |
| 15 | 24 146 20-S | 1 | Plate-Backing (No. 1 Side) ■ |
| | 24 113 81-S | 1 | Decal-23 HP ● ■ |
| | 25 113 39-S | 1 | Decal-Laminate, Clear ● ■ |

● Not illustrated

■ Obtain parts from www.kohlerplus.com

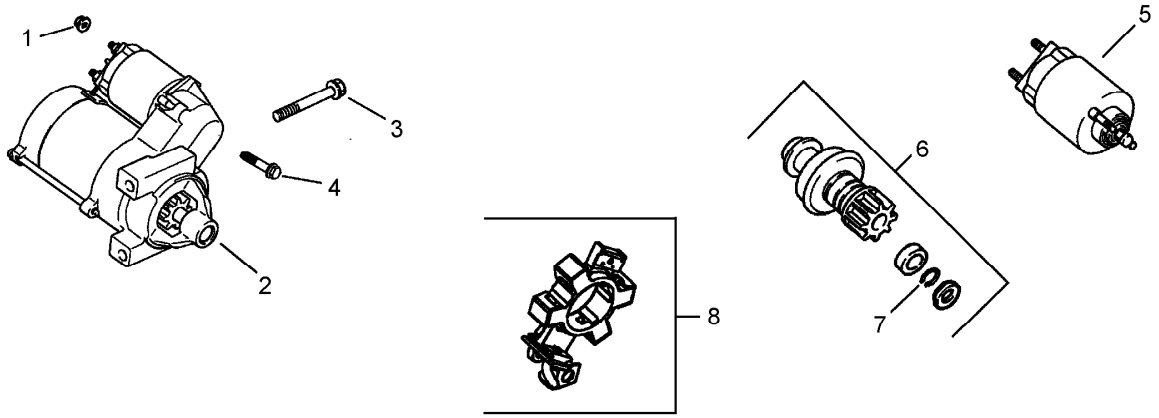


# Starting System Assembly
# Kohler CH23S 76585

| *Ref.* | *Part Number* | *Qty.* | *Description* |
|---|---|---|---|
| 1 | M-841080-S | 1 | Nut-Flange (M8X1.25) ● |
| 2 | M-839080-S | 2 | Screw-Flg (M8X1.25X80) ● |
| 3 | 25 098 09-S | 1 | Starter Solenoid Shift ASM (Includes 4-8) ● |
| 4 | 25 086 113-S | 3 | Screw-Torx Head, External ● |
| 5 | 25 435 05-S | 1 | Solenoid Kit (Includes 4) ● |
| 6 | 25 755 33-S | 1 | Pinion Drive Kit (Includes 7) ● |
| 7 | 25 141 05-S | 1 | Ring-Retaining ● |
| 8 | 25 221 01-S | 1 | Brush Holder Kit ● |

● Obtain parts from www.kohlerplus.com

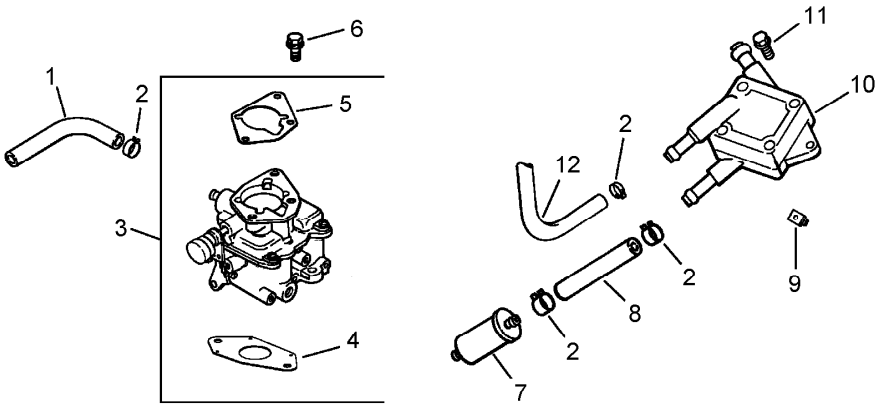


# Fuel System Assembly
# Kohler CH23S 76585

| *Ref.* | *Part Number* | *Qty.* | *Description* |
|---|---|---|---|
| 1 | 24 353 41-S | 1 | Line-Fuel, 8-1/2In (Pump To Carburetor) ■ |
| 2 | 25 237 14-S | 6 | Clamp-Hose, Spring (1/2) ■ |
| 3 | 24 853 59-S | 1 | Carburetor Kit (Includes 4-5) ■ |
| 4 | 24 041 53-S | 1 | Gasket-Carburetor ■ |
| 5 | 24 041 06-S | 1 | Gasket-Base, Air Cleaner ■ |
| 6 | M-651025-S | 2 | Screw-HF (M6X1.0X25) ■ |
| 7 | 24 050 05-S | 1 | Filter-Fuel ■ |
| 8 | 25 353 52-S | 1 | Line-Fuel, 9-1/4In (Pump To Filter) ■ |
| 9 | 24 100 01-S | 2 | Nut-Plastic ■ |
| 10 | 24 393 16-S | 1 | Pump-Fuel ■ |
| 11 | 24 086 12-S | 2 | Screw-TAP (M6X1.7X18) ■ |
| 12 | 24 353 02-S | 1 | Line-Fuel, Flexible (15.5) ■ |
| | 24 518 24-S | 1 | Lead-Ground ● ■ |
| | 24 757 01-S | 1 | Solenoid Repair Kit ● ■ |
| | 24 757 02-S | 1 | Float Repair Kit ● ■ |
| | 24 757 03-S | 1 | Carburetor Repair Kit ● ■ |
| | 24 757 07-S | 1 | Choke Repair Kit ● ■ |
| | 24 755 125-S | 1 | High Altitude Kit ● ■ |

● Not illustrated

■ Obtain parts from www.kohlerplus.com

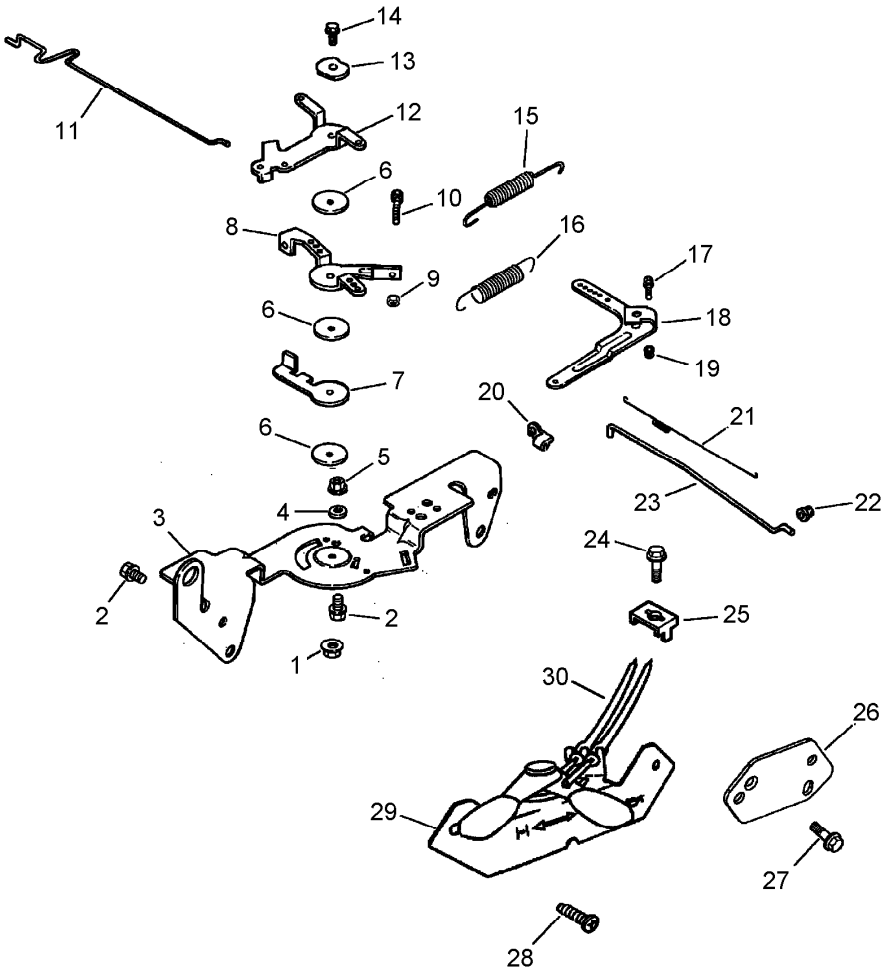


# Engine Control Assembly
# Kohler CH23S 76585

| Ref. | Part Number | Qty. | Description |
|---|---|---|---|
| 1 | M-547050-S | 1 | Nut-Lock (M5X.8) ■ |
| 2 | M-645016-S | 4 | Screw-Flange, Thread Forming (M6X1.0X16) ■ |
| 3 | 24 126 56-S | 1 | Bracket-Control ■ |
| 4 | X-20-1-S | 1 | Washer-Lock (.25) ■ |
| 5 | M-541050-S | 1 | Nut-HF (M5X0.8) ■ |
| 6 | 24 468 01-S | 3 | Washer-Flat (5.5Mm) ■ |
| 7 | 24 090 07-S | 1 | Lever-Actuator, Throttle ■ |
| 8 | 24 090 13-S | 1 | Lever-Control, Throttle ■ |
| 9 | M-446030-S | 1 | Nut (M4X0.7) ■ |
| 10 | M-401030-S | 1 | Screw (M4X0.7X30) ■ |
| 11 | 24 079 21-S | 1 | Linkage-Choke ■ |
| 12 | 24 090 05-S | 1 | Lever-Choke ■ |
| 13 | 41 468 03-S | 1 | Washer-Spring (1/4) ■ |
| 14 | M-545020-S | 1 | Screw-Flange, Thread Forming (M5X.8X20) ■ |
| 15 | 24 089 51-S | 1 | Spring-Limiter, Throttle ■ |
| 16 | 24 089 48-S | 1 | Spring-Governor ■ |
| 17 | 24 211 03-S | 1 | Bolt-Sq Neck, Rd HD (M6X1.0X25) ■ |
| 18 | 24 090 33-S | 1 | Lever-Governor ■ |
| 19 | M-641060-S | 1 | Nut-Flange (M6X1.0) ■ |
| 20 | 25 158 11-S | 1 | Bushing-Retaining, Linkage ■ |
| 21 | 24 089 01-S | 1 | Spring-Linkage ■ |
| 22 | 25 158 08-S | 1 | Bushing-Linkage, Throttle ■ |
| 23 | 24 079 01-S | 1 | Linkage-Throttle ■ |
| 24 | 24 086 43-S | 1 | Screw-Lbd, Thd Frm (M5X0.8X16) ■ |
| 25 | 12 237 01-S | 1 | Clamp-Cable ■ |
| 26 | 24 126 99-S | 1 | Bracket-Support, Cable ■ |
| 27 | M-545010-S | 2 | Screw-HHFTF (M5X.80X10) ■ |
| 28 | 24 086 06-S | 2 | Screw-PPH (11-16X3/4) ■ |
| 29 | 24 225 02-S | 1 | Control Cable ASM (Includes 29) ■ |
| 30 | 24 159 01-S | 1 | Cable-Speed, Engine ■ |
| | 24 113 92-S | 1 | Decal-Panel, Control ● ■ |

● Not illustrated

■ Obtain parts from www.kohlerplus.com

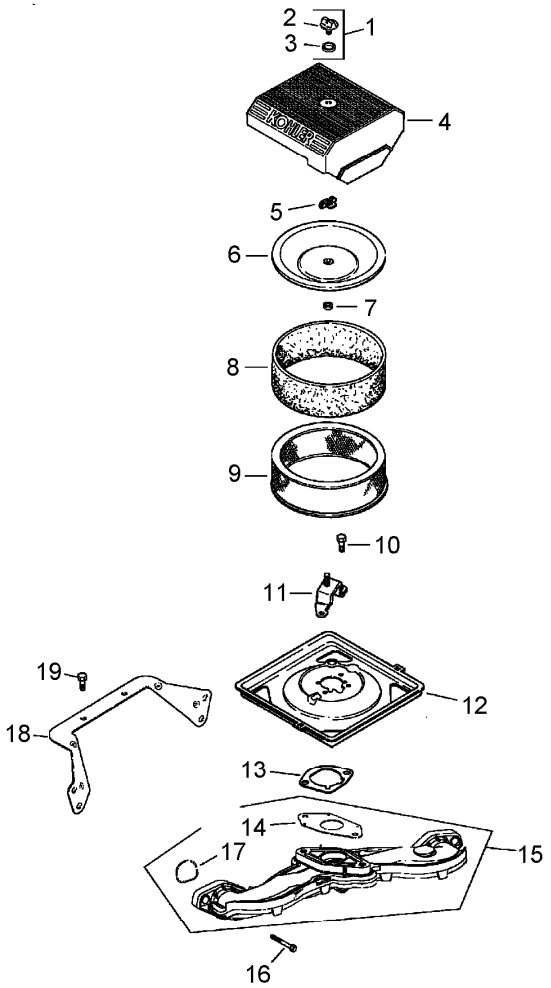


# Air Intake / Filtration Assembly
# Kohler CH23S 76585

| Ref. | Part Number | Qty. | Description |
|---|---|---|---|
| 1 | 54 755 01-S | 1 | Knob Kit (Includes 2, 3) ■ |
| 2 | 25 341 03-S | 1 | Knob-Cover ■ |
| 3 | 24 153 20-S | 1 | O-Ring ■ |
| 4 | 24 096 67-S | 1 | Cover-Cleaner, Air ■ |
| 5 | 12 100 01-S | 1 | Nut-Wing ■ |
| 6 | 24 096 01-S | 1 | Cover-Air Cleaner, Inner ■ |
| 7 | 230046-S | 1 | Seal ■ |
| 8 | 24 083 05-S | 1 | Pre-Cleaner ■ |
| 9 | 24 083 03-S | 1 | Element-Filter, Air ■ |
| 10 | M-645016-S | 3 | Screw-Flange, Thread Forming (M6X1.0X16) ■ |
| 11 | 24 126 141-S | 1 | Bracket-Base, Air Cleaner ■ |
| 12 | 24 094 37-S | 1 | Base-Cleaner, Air ■ |
| 13 | 24 041 06-S | 1 | Gasket-Base, Air Cleaner ■ |
| 14 | 24 041 53-S | 1 | Gasket-Carburetor ■ |
| 15 | 24 164 54-S | 1 | Manifold-Intake (Includes 14, 17) ■ |
| 16 | M-651040-S | 4 | Screw-Flange (M6X1.0X40) ■ |
| 17 | 24 153 27-S | 2 | O-Ring ■ |
| 18 | 24 126 130-S | 1 | Bracket-Base, Air Cleaner ■ |
| 19 | M-545010-S | 2 | Screw-HHFTF (M5X.80X10) ■ |
| | 28 112 01-S | 1 | Spacer ● ■ |
| | M-641060-S | 1 | Nut-Flange (M6X1.0) ● ■ |

● Not illustrated

■ Obtain parts from www.kohlerplus.com

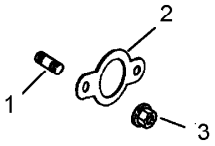


# Exhaust Assembly
# Kohler CH23S 76585

| Ref. | Part Number | Qty. | Description |
|---|---|---|---|
| 1 | 25 072 04-S | 4 | Stud (M8X1.25X33) ■ |
| 2 | 24 041 49-S | 2 | Gasket-Exhaust ■ |
| 3 | M-841080-S | 4 | Nut-Flange (M8X1.25) ■ |
| | 25 454 01-S | 1 | Tie-Wire ● ■ |
| | 24 782 27 | 1 | Miniblock ASM ● ■ |
| | 24 755 113-S | 1 | Gasket Set ● ■ |

● Not illustrated

■ Obtain parts from www.kohlerplus.com

# Attachments and Accessories

## For 09200 ProCore 648 Aerator

| Product Name | Model/Part |
|---|---|
| Windrower Kit | 09220 |
| Needle Tine Head Kit | 09221 |
| Mini Tine Head Kit | 09222 |
| 3 Tine, 3/4 Inch Mount, Head Kit | 09223 |
| 4 Tine, 3/4 Inch Mount, Head Kit | 09224 |
| Tire Scraper Kit | 09225 |
| 3 Tine, 7/8 Inch Mount, Head Kit | 09226 |

**Notes:**

**Notes:**

TORO®

Count on it.