Form No. 3389-626 Rev C

TORO®

Count on it.

Parts Catalog

Reelmaster® 3100-D

Traction Unit With Sidewinder®

Model No. 03171—Serial No. 315000001 and Up

Register at www.Toro.com.
Original Instructions (EN)

CE

3389-626 C

Ordering Replacement Parts

To order replacement parts, please supply the part number, the quantity, and the description of each part desired.

Understanding Reference Numbers

Each identified part in an illustration has a reference number. The reference number for a part also appears in the parts list, along with other information about the part.

This catalog uses two special reference number formats, one to indicate parts in a service assembly and another to indicate the quantity of a given part in an illustration.

Service Assembly Reference Numbers

Parts in service assemblies have reference numbers in the form a:b. The a represents the reference number of the entire service assembly and the b represents a sequential number unique to each part within the service assembly.

For example, a wheel assembly might be identified by reference number 6, the tire by 6:1, the valve by 6:2, and the wheel by 6:3. When you order the assembly identified by reference number 6, you receive all parts identified by reference numbers 6:1,6:2, and 6:3. However, you may also order any part individually. Reference numbers of this type appear in illustration and in parts lists.

Reference Numbers Indicating Quantity

In an illustration, if a reference number indicates more than one part, the reference number has the form nX y. The n represents the quantity of the part, the X is the multiplication symbol, and the y represents the reference number.

For example, in an illustration, the reference number 2X 37 means that two of the parts identified by reference number 37 are indicated.

Contents

Frame and Platform Assembly . . . 5
Front Wheel and Brake Assembly . . . 6
Hydraulic Motor Assembly No. 110-8785 . . . 8
Hydraulic Motor Assembly No. 110-8786 . . . 9
Brake Assembly No. 104-7705 . . . 10
Steering Column Assembly . . . 11
Steering Valve Assembly No. 121-7856 . . . 12
Rear Fork and Tire Assembly . . . 13
Hydraulic Cylinder Assembly No. 94-8141 . . . 15
Hydraulic Motor Assembly No. 95-8694 . . . 16
Control Panel Assembly . . . 17
Front Platform Assembly . . . 18
Traction Pedal Assembly . . . 19
Control Valve Installation Assembly . . . 20
Valve Assembly No. 95-8581 . . . 21
Rear Lift Arm Assembly . . . 22
Hydraulic Cylinder Assembly No. 112-9916 . . . 24
Neutral Arm Assembly . . . 25
Engine Assembly . . . 26
Air Cleaner and Muffler Assembly . . . 27
Air Cleaner Assembly No. 93-2190 . . . 28
Radiator Assembly . . . 29
Hood Assembly . . . 31
Fuel System Assembly . . . 32
Manifold Block Assembly . . . 34
Hydraulic Manifold Assembly No. 108-9037 . . . 35
Hydraulic Tank Assembly . . . 36
Hydrostat Assembly . . . 37
Hydraulic Pump Assembly No. 104-4890 . . . 39
Gear Pump Assembly No. 95-8601 . . . 41
Carrier Assembly . . . 42
Scissor Assembly . . . 44
Reel Motor Assembly . . . 45
Gear Motor Assembly No. 115-8250 . . . 46
Battery Assembly . . . 47
Parking Brake Assembly . . . 48
Seat Assembly . . . 49
Crankcase Assembly . . . 50
Oil Pan and Dipstick Assembly . . . 51
Cylinder Head Assembly . . . 52
Gear Case and Oil Filter Cartridge Assembly . . . 53
Cylinder Head Cover Assembly . . . 54
Main Bearing Case Assembly . . . 55
Camshaft and Idle Gear Shaft Assembly . . . 56
Piston and Crankshaft Assembly . . . 57
Fuel Camshaft and Governor Shaft Assembly . . . 58
Idle Apparatus Assembly . . . 59
Stop Solenoid and Fuel Pump Cover Assembly . . . 60
Injection Pump Assembly . . . 61
Governor Assembly . . . 62
Speed Control Plate Assembly . . . 63
Nozzle Holder and Glow Plug Assembly . . . 64
Nozzle Holder Assembly . . . 65
Alternator, Pulley and Fan Assembly . . . 66

© 2019—The Toro® Company

8111 Lyndale Avenue South
Bloomington, MN 55420

Contact us at www.Toro.com.
Printed in the USA.

All Rights Reserved

Contents (continued)

Alternator Components Assembly 67
Starter and Flywheel Assembly 68
Starter Component Assembly 69
Water Flange and Thermostat Assembly 70
Water Pump and Water Pipe Assembly 71
Valve and Rocker Arm Assembly 72
Inlet and Exhaust Manifold Assembly 73
Miscellaneous Engine Parts 74
Upper Engine Gasket Kit 75
Lower Engine Gasket Kit 76
Attachments and Accessories 77

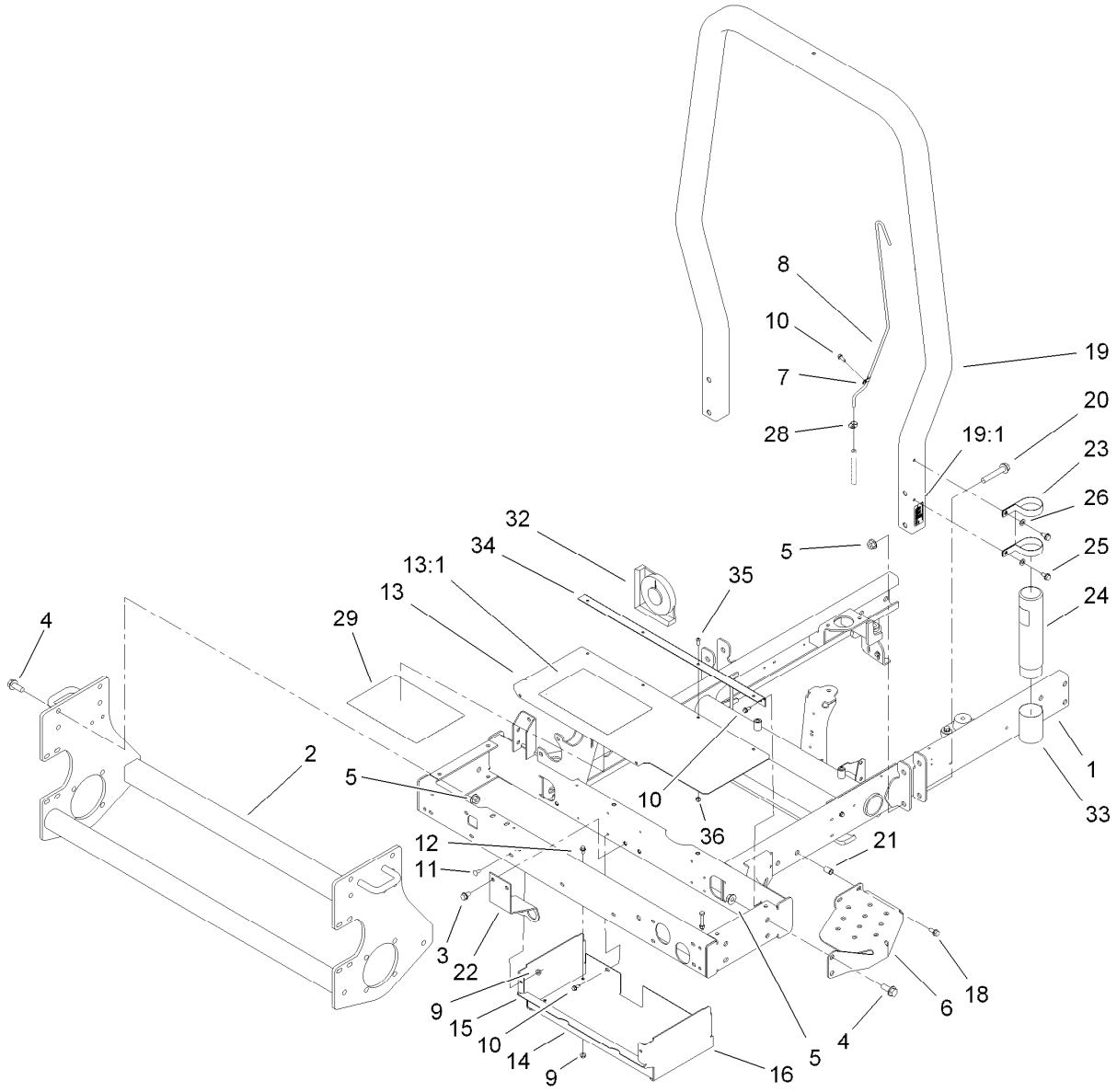

Frame and Platform Assembly

Ref.	Part Number	Qty.	Description
1	95-8590-03	1	Frame ASM
2	95-8568-03	1	Frame-Lower
3	32144-15	2	Screw-HHFTF
4	3234-38	8	Screw-HHF
5	32128-49	12	Nut-HHF
6	99-3375-03	1	Step
7	2412-72	3	Clip-Closed, Insulated
8	95-8615	1	Tube-Breather
9	32128-33	6	Nut-HF
10	32144-10	11	Screw-HWH
11	3229-11	2	Screw-CARR
12	3234-13	4	Screw-HHF
13	119-2029	1	Toolbox Cover ASM
13:1	99-3496	1	Decal-Danger
13:1	104-5181	1	Decal-Danger, CE
14	99-3430-03	1	Bottom-Toolbox
15	99-3431-03	1	End-Toolbox, RH
16	99-3432-03	1	End-Toolbox, LH

Ref.	Part Number	Qty.	Description
18	3234-5	2	Screw-HHF
19	107-7833	1	ROPS ASM
19:1	107-7831	1	Decal-ROPS
20	3234-40	4	Screw-HF
21	32148-8	2	Nut-Clinch
22	115-3417-03	1	Bracket-Bulkhead, Scissor
23	104-7050	1	Tube-Manual
24	2412-133	2	Clamp-R
25	32144-70	2	Screw-HWHTF
26	3256-23	2	Washer-Plain
28	2412-108	1	Clamp-Worm
29	117-5104	1	Decal-Service
32	99-3503	1	Indicator-Angle
33	104-7048	1	Cap-Housing
34	119-2034	1	Hinge-Toolbox
35	119-6906	4	Screw-HSBH
36	3296-42	4	Nut-Lock, NI

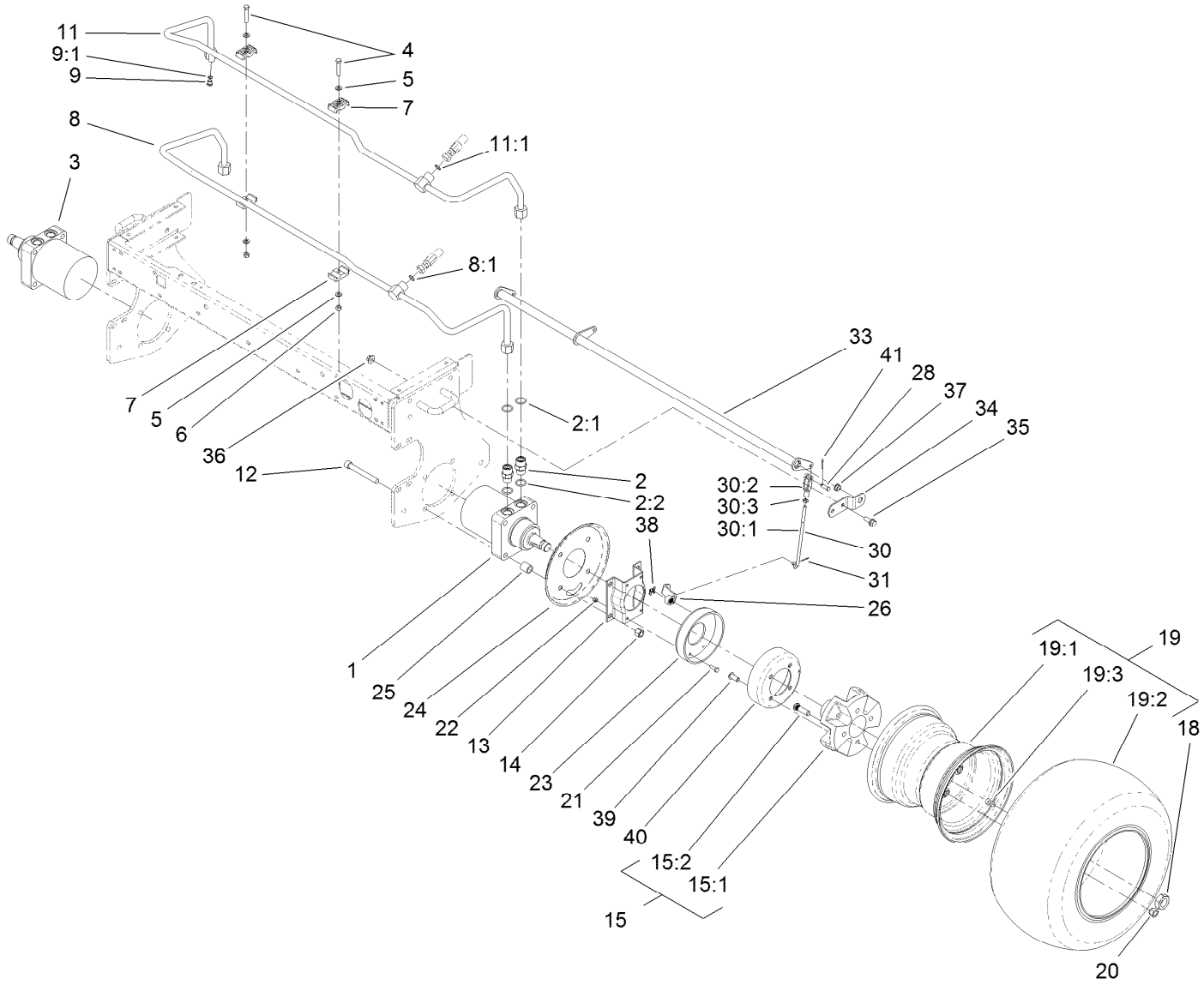

Front Wheel and Brake Assembly

Ref.	Part Number	Qty.	Description
1	110-8785	1	HYD Motor ASM (CCW)
2	340-7	4	Fitting-Straight
2:1	237-65	1	O-Ring
2:2	237-80	1	O-Ring
3	110-8786	1	HYD Motor ASM (CW)
4	322-9	2	Screw-HH
5	3256-23	4	Washer-Plain
6	3296-29	2	Nut-Lock, NI
7	56-7971	4	Clamp-Tube
8	95-8783	1	Tube ASM
8:1	237-65	1	O-Ring
9	353-990	1	Plug ASM
9:1	237-78	1	O-Ring
11	95-8784	1	Tube ASM
11:1	237-65	1	O-Ring
12	3274-99	8	Screw-HSH
13	84-2000-03	2	Bracket-Brake
14	3296-23	8	Nut-Lock, NI

Ref.	Part Number	Qty.	Description
15		2	Wheel Hub / Stud ASM ●
15:1	104-0462	1	Hub-Wheel, Spacer
15:2	10-6830	4	Stud-Type, Drive
18	26-3790	2	Nut-Lock
19		2	Tire And Rim ASM ●
19:1	121-3548	1	Rim
19:2	117-5125	1	Tire
19:3	232-27	1	Stem-Valve
20	242-50	8	Nut-Lug
21	321-5	8	Screw-HH
22	3296-42	8	Nut-Lock, NI
23	104-7705	2	Brake ASM
24	104-0485-03	2	Shield-Wheel
25	119-8238	8	Spacer-Deck Pulley
26	114-2726	2	Lever-Brake
28	283-1	2	Pin-Clevis
30	115-6672	2	Brake Lever ASM
30:1	104-4627	1	Rod-Adjusting

● Not serviced separately

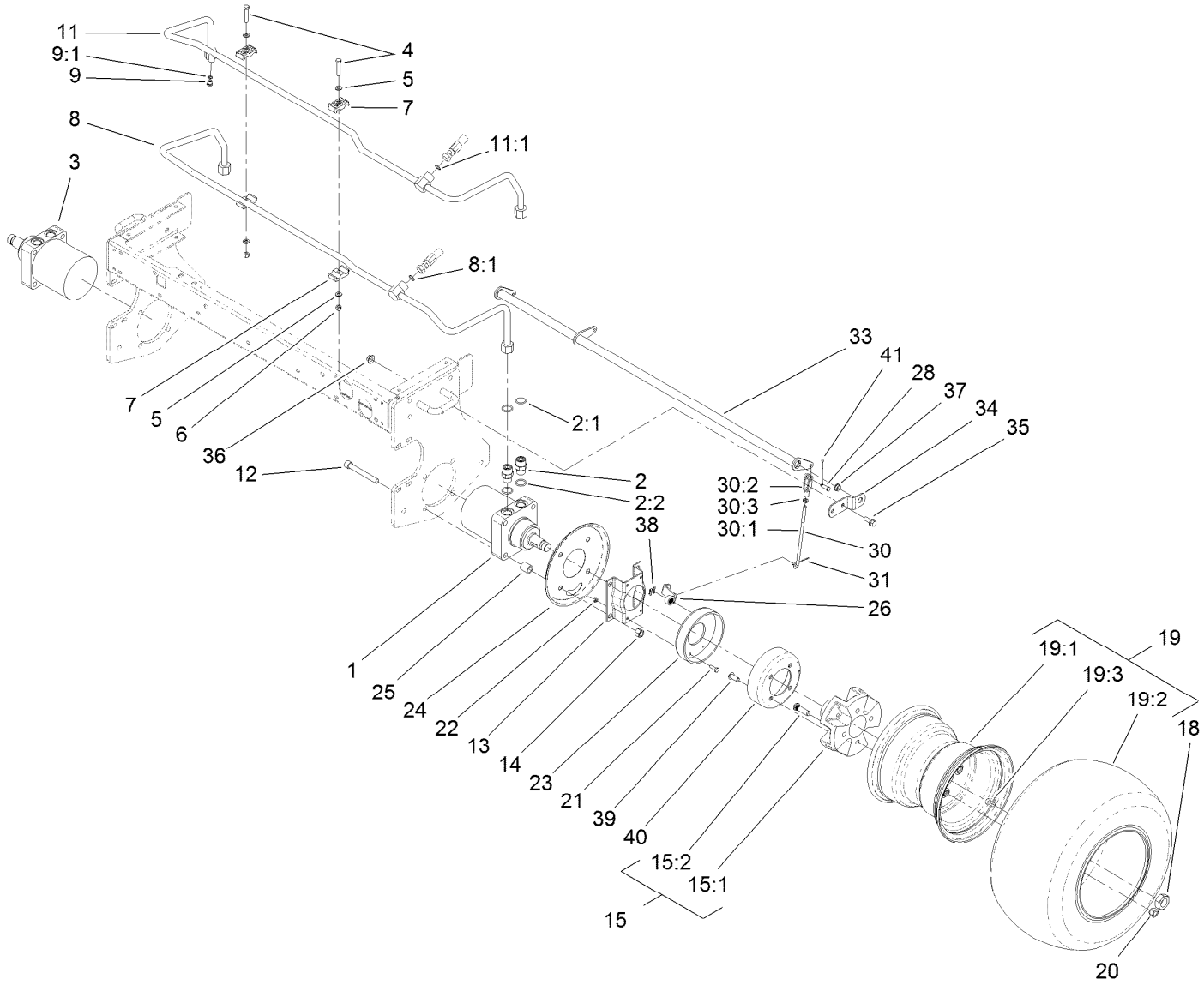

Front Wheel and Brake Assembly (continued)

Ref.	Part Number	Qty.	Description
30:2	1-303105	1	Yoke-Adjustable
30:3	3220-2	1	Nut-Jam
31	3272-6	2	Pin-Cotter
33	104-4625-03	1	Shaft-Pivot, Brake
34	95-8683	2	Bracket-Pivot, Brake
35	3234-11	4	Screw-HHF

Ref.	Part Number	Qty.	Description
36	32128-43	4	Nut-Flange
37	256-156	2	Bushing-Flange
38	104-7706	2	E-Ring, Bowed
39	3274-105	8	Screw-HSBH
40	104-4809	2	Drum-Brake
41	3272-10	2	Pin-Cotter

● Not serviced separately

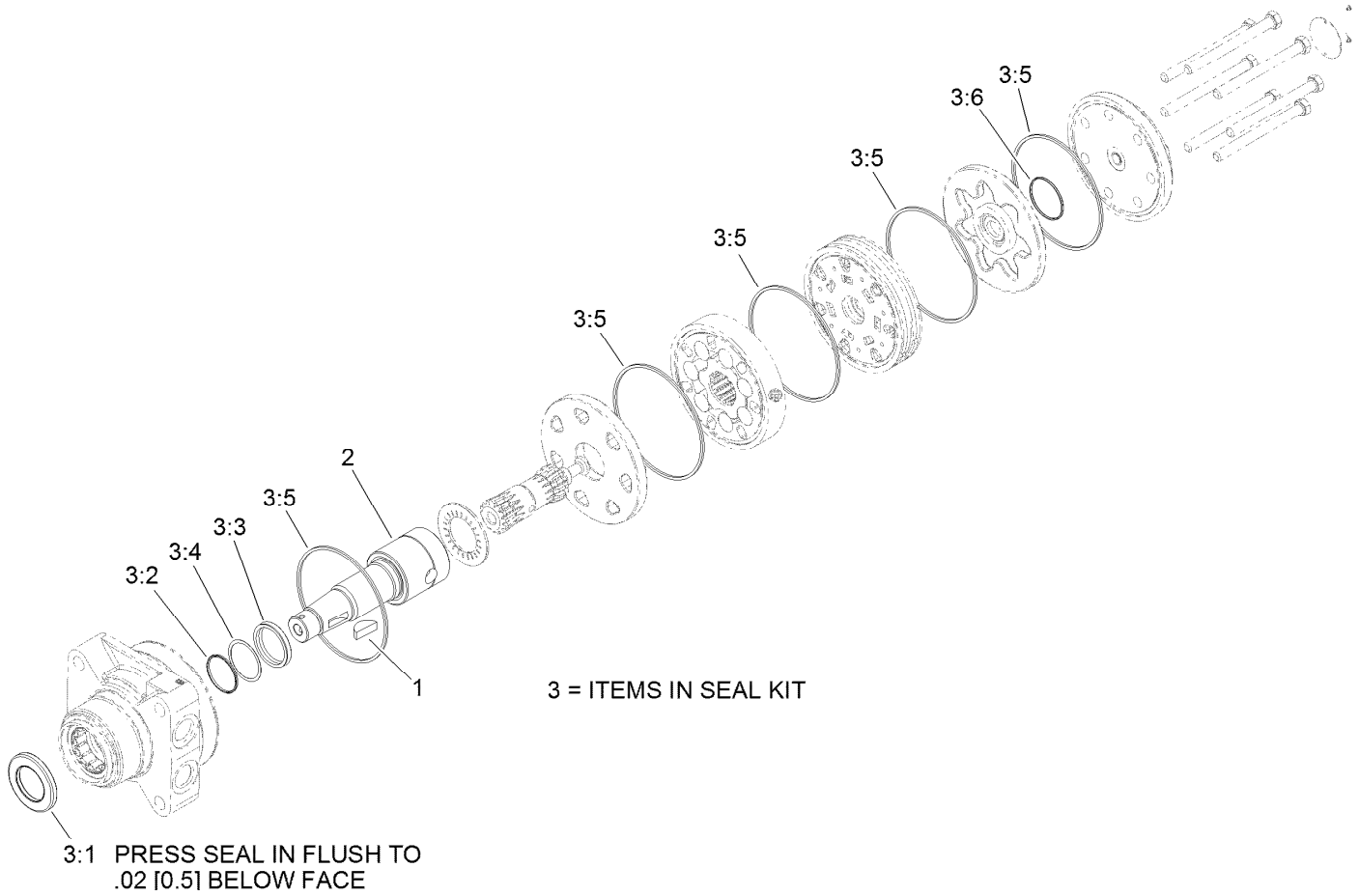

Hydraulic Motor Assembly No. 110-8785

Ref.	*Part Number*	*Qty.*	*Description*
1	3257-42	1	Key-Woodruff
2	99-3090	1	Shaft-Coupling
3	94-8178	1	Seal Kit
3:1		1	Seal-Dirt And Water ●
3:2		1	Backup-Ring ●
3:3		1	Seal-Shaft ●
3:4		1	Washer-Backup ●
3:5		5	Seal-Square, Ring (Inner) ●
3:6		1	Seal-Commutator ●

● Not serviced separately

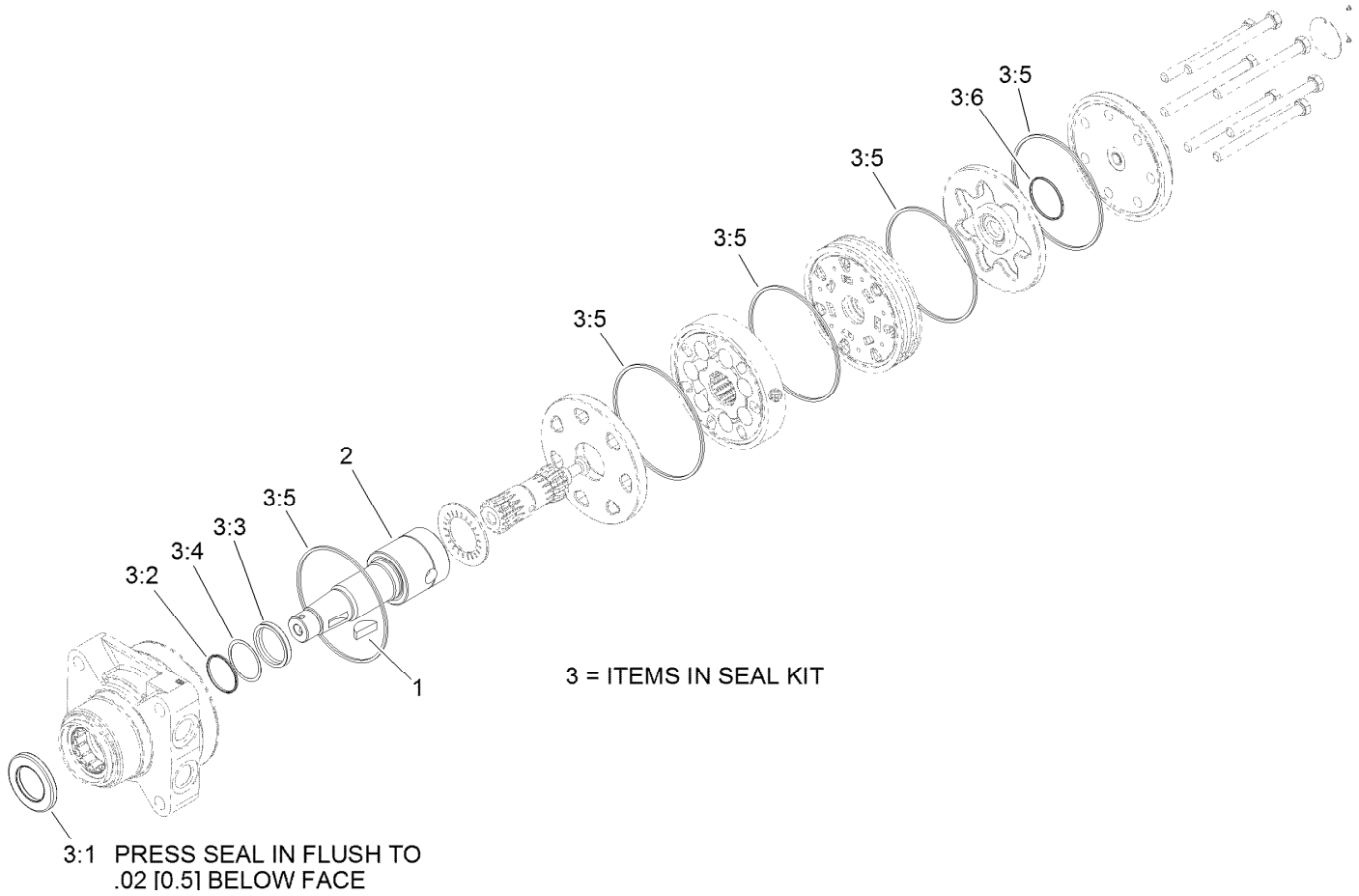

Hydraulic Motor Assembly No. 110-8786

Ref.	*Part Number*	*Qty.*	*Description*
1	3257-42	1	Key-Woodruff
2	99-3090	1	Shaft-Coupling
3	94-8178	1	Seal Kit
3:1		1	Seal-Dirt And Water ●
3:2		1	Backup-Ring ●
3:3		1	Seal-Shaft ●
3:4		1	Washer-Backup ●
3:5		5	Seal-Square, Ring (Inner) ●
3:6		1	Seal-Commutator ●

● Not serviced separately

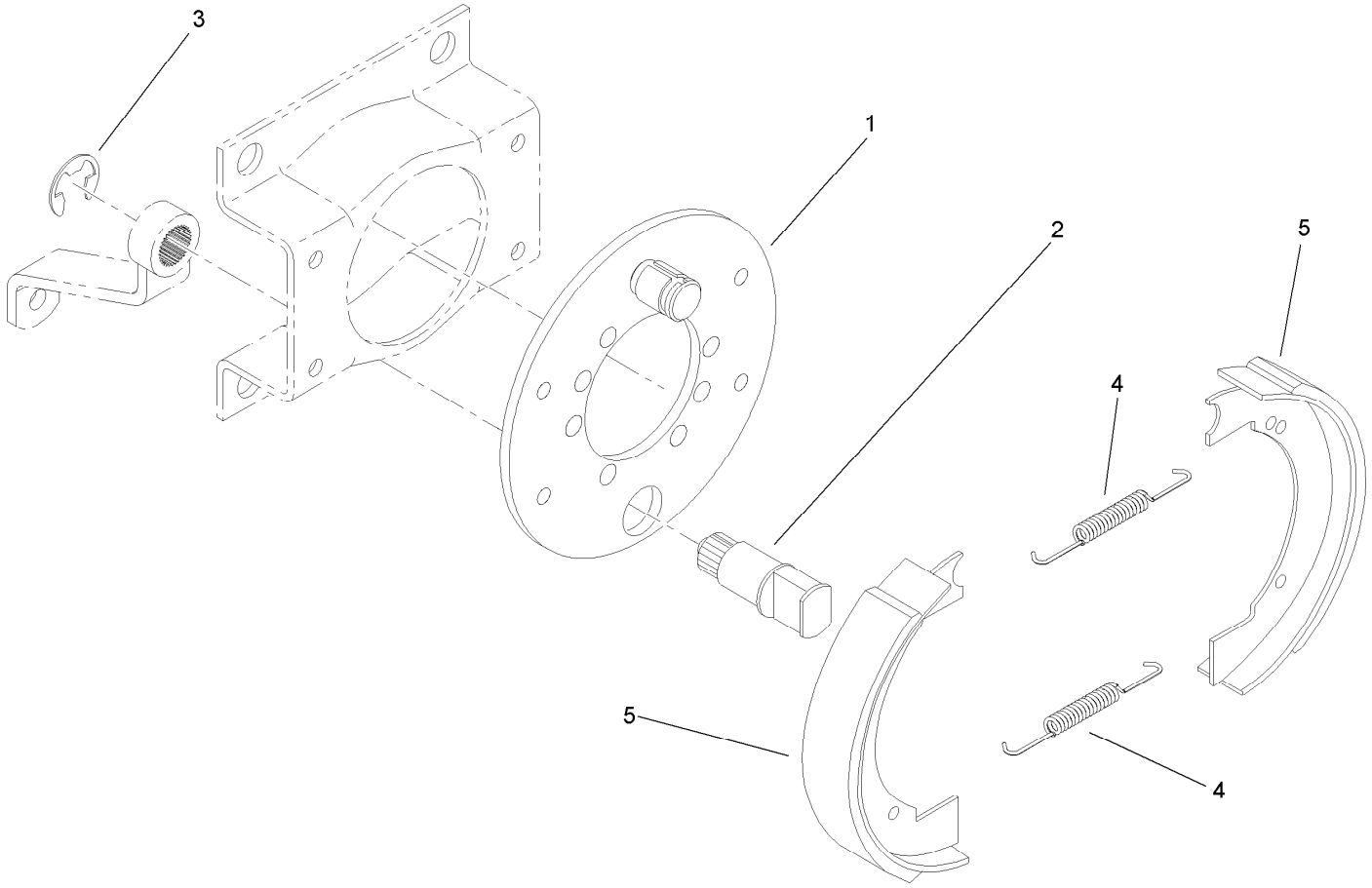

Brake Assembly No. 104-7705

Ref.	*Part Number*	*Qty.*	*Description*
1	70-9870	1	Plate-Backing
2	104-7707	1	Shaft-Cam, Brake
3	104-7706	1	E-Ring, Bowed
4	70-9880	2	Spring-Return
5	70-9840	2	Shoe-Brake

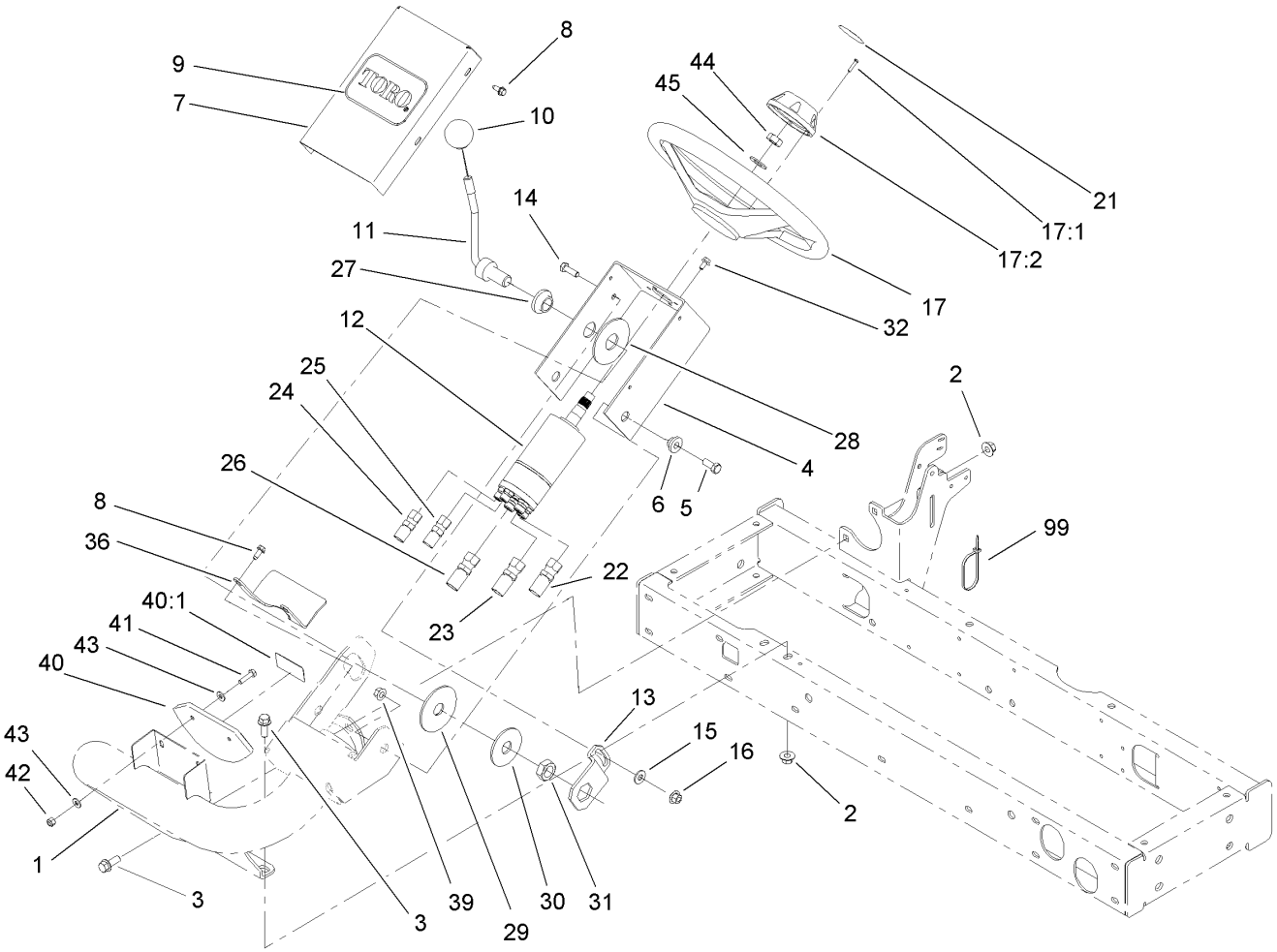

Steering Column Assembly

Ref.	Part Number	Qty.	Description
1	105-8536-01	1	Arm-Steering
2	32128-43	4	Nut-Flange
3	3234-11	4	Screw-HHF
4	104-5185-01	1	Bracket-Valve, Steering
5	323-5	2	Screw-HH
6	93-5988	2	Hub-Pivot
7	95-8794-01	1	Cover-Valve, Steering
8	32144-10	5	Screw-HWH
9	67-1300	1	Decal
10	233-48	1	Knob
11	95-8798-03	1	Lever-Steering
12	121-7856	1	Steering Valve ASM
13	80-2880	1	Bracket-Tilt
14	322-5	1	Screw-HH
15	3256-3	1	Washer-Flat
16	32128-44	1	Nut
17	75-0560	1	Steering Wheel ASM
17:1	32144-21	1	Screw
17:2	68-5140	1	Cap-Wheel, Steering
21	68-5370	1	Decal
22	95-8842	1	Hose-HYD

Ref.	Part Number	Qty.	Description
23	95-8843	1	Hose-HYD
24	95-8844	1	Hose ASM
25	95-8845	1	Hose ASM
26	95-8846	1	Hose-HYD
27	99-3502	1	Boss
28	31-0390	1	Disc-Friction
29	82-9010	1	Disc-Friction
30	80-2930	1	Washer-Flat
31	3218-7	1	Nut-Jam
32	33103-012	4	Screw-HHF
36	99-3405-01	1	Shield-Steering
39	32128-21	2	Nut-HF
40	100-4929	1	Slope Indicator ASM
40:1	100-4837	1	Decal-Danger
40:1	107-7801	1	Decal-Danger, 15 Degree
41	321-7	2	Screw-HH
42	3296-42	2	Nut-Lock, NI
43	3256-22	4	Washer-Flat
44	3296-33	1	Nut-Lock, NI
45	3256-27	1	Washer-Flat
99	3290-378	2	Tie-Cable

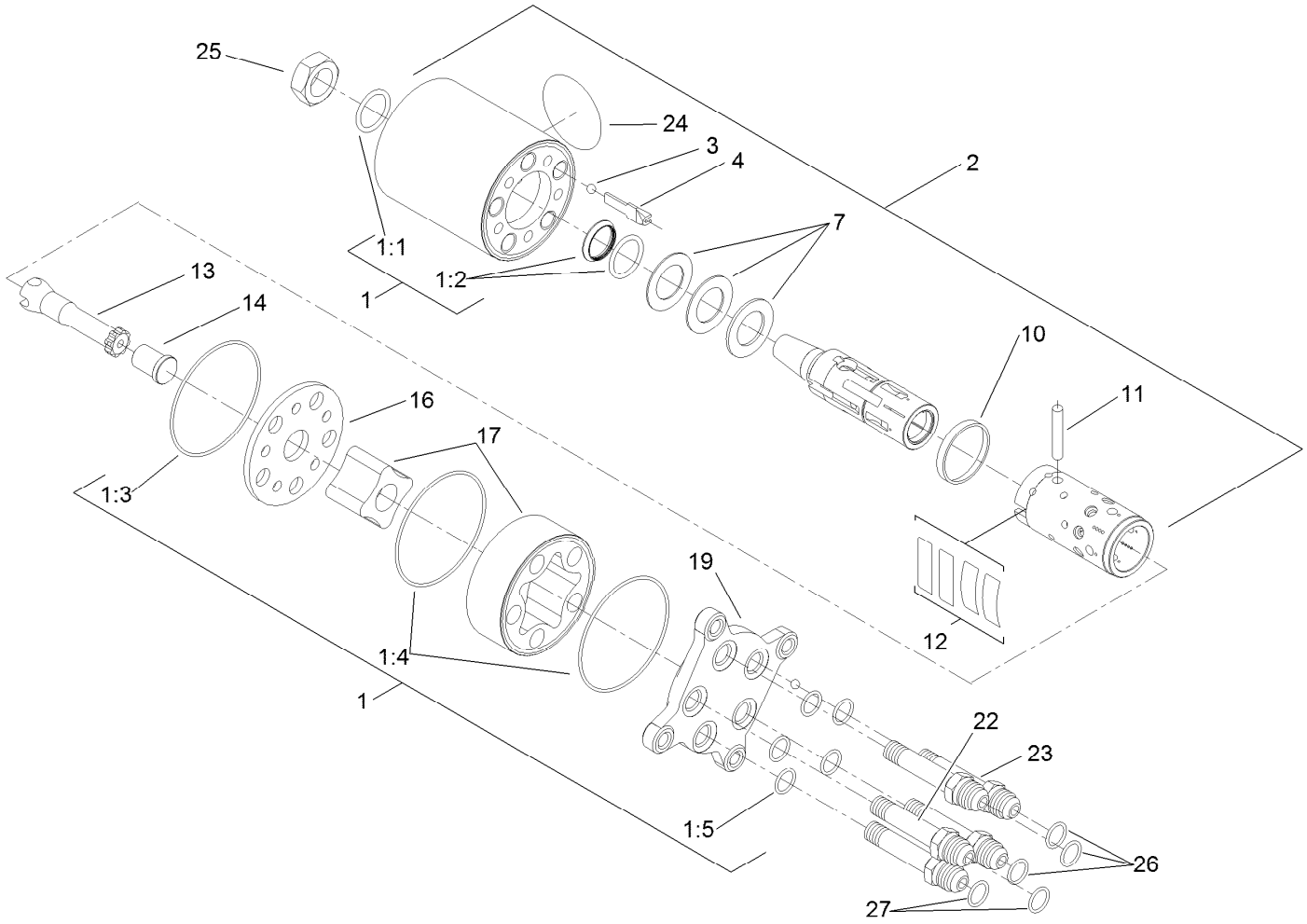

Steering Valve Assembly No. 121-7856

Ref.	Part Number	Qty.	Description
1	106-6716	1	Seal Kit
1:1		1	Ring-Seal, Dust ●
1:2		1	Seal-Shaft ●
1:3		1	O-Ring ●
1:4		2	O-Ring ●
1:5		5	O-Ring ●
2		1	Housing ●
3		1	Ball ●
4		1	Stop-Ball ●
7		1	Bearing ASM ●
10		1	Ring ●
11		1	Pin-Cross ●

Ref.	Part Number	Qty.	Description
12		1	Springs ●
13		1	Shaft ●
14		1	Spacer ●
16		1	Plate-Distributor ●
17		1	Gearwheel Set ●
19		1	Cover-End ●
22		1	Screw-Special ●
23		4	Screw-Special ●
24		1	Plate-Name ●
25	3296-33	1	Nut-Lock, NI
26	237-22	3	O-Ring
27	237-21	2	O-Ring

● Not serviced separately

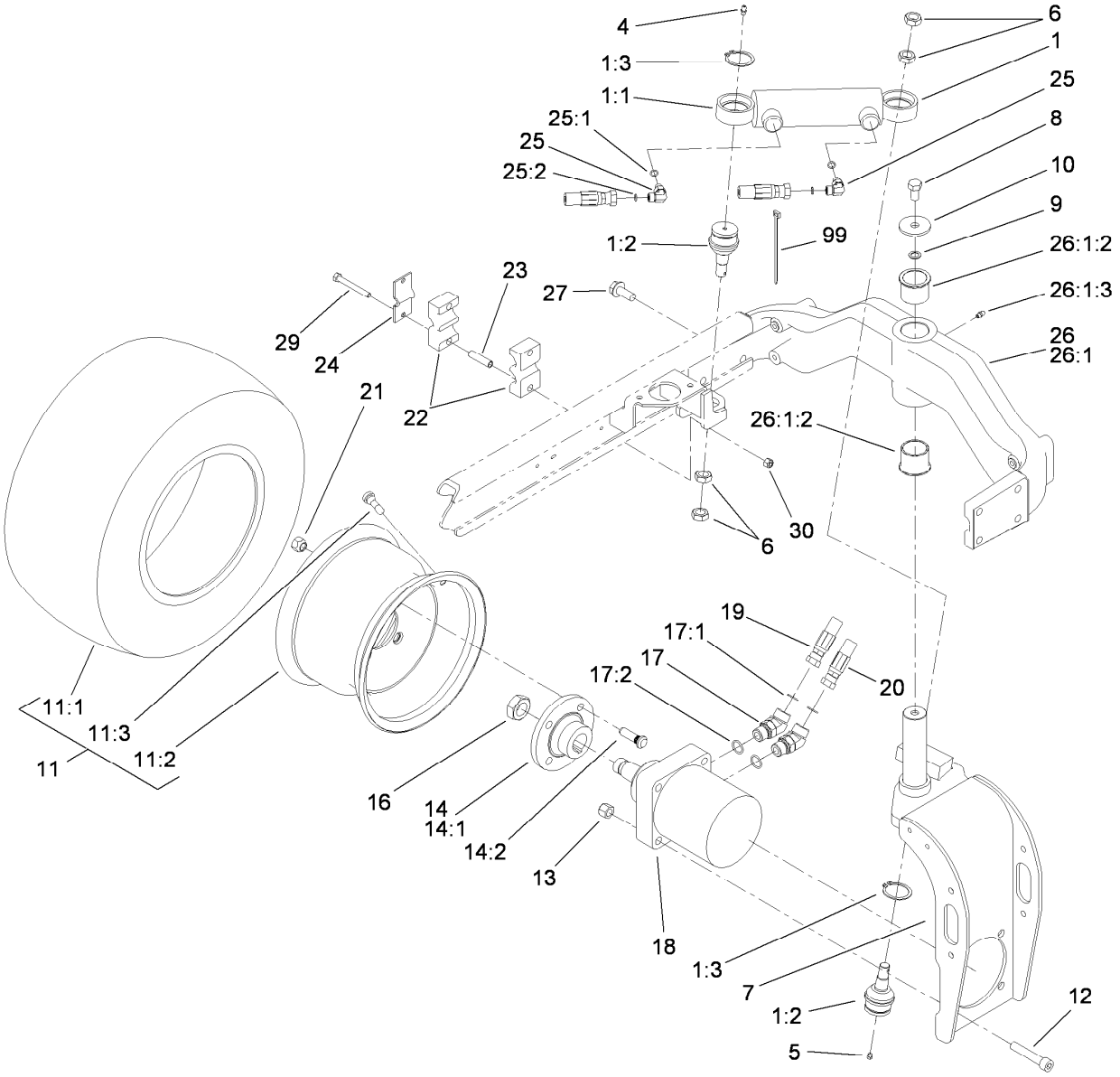

Rear Fork and Tire Assembly

Ref.	Part Number	Qty.	Description
1		1	Steering Cylinder / Balljoint ASM ●
1:1	94-8141	1	HYD Cylinder ASM
1:2	106-6774	2	Joint-Ball
1:3	32151-104	2	Ring-Retaining, External
4	302-5	1	Fitting-Grease
5	302-59	1	Plug-Threaded
6	3220-6	4	Nut-Jam
7	95-8905-01	1	Fork-Rear
8	325-3	1	Screw-HH
9	3255-2	1	Washer-Lock, EXT
10	75-7730	1	Washer-Thrust
11		1	Wheel And Tire ASM ●
11:1	117-5129	1	Rim
11:2	115-1572	1	Tire
11:3	232-27	1	Stem-Valve
12	3274-93	4	Screw-HSH
13	3296-23	4	Nut-Lock, NI

Ref.	Part Number	Qty.	Description
14		1	Wheel Hub / Stud ASM ●
14:1	10-6870-03	1	Hub-Wheel
14:2	10-6830	4	Stud-Type, Drive
16	26-3790	1	Nut-Lock
17	340-14	2	Fitting-HYD, 45 DEG
17:1	237-65	1	O-Ring
17:2	237-80	1	O-Ring
18	95-8694	1	HYD Motor ASM
19	105-1221	1	Hose ASM
20	105-1222	1	Hose ASM
21	242-50	4	Nut-Lug
22	82-8170	2	Clamp
23	93-7960	2	Spacer
24	93-7961	1	Clamp-Drain, Case
25	340-132	2	Fitting-Elbow, 90 DEG
25:1	237-78	1	O-Ring
25:2	237-21	1	O-Ring
26	107-7828-03	1	Casting-Rear

● Not serviced separately

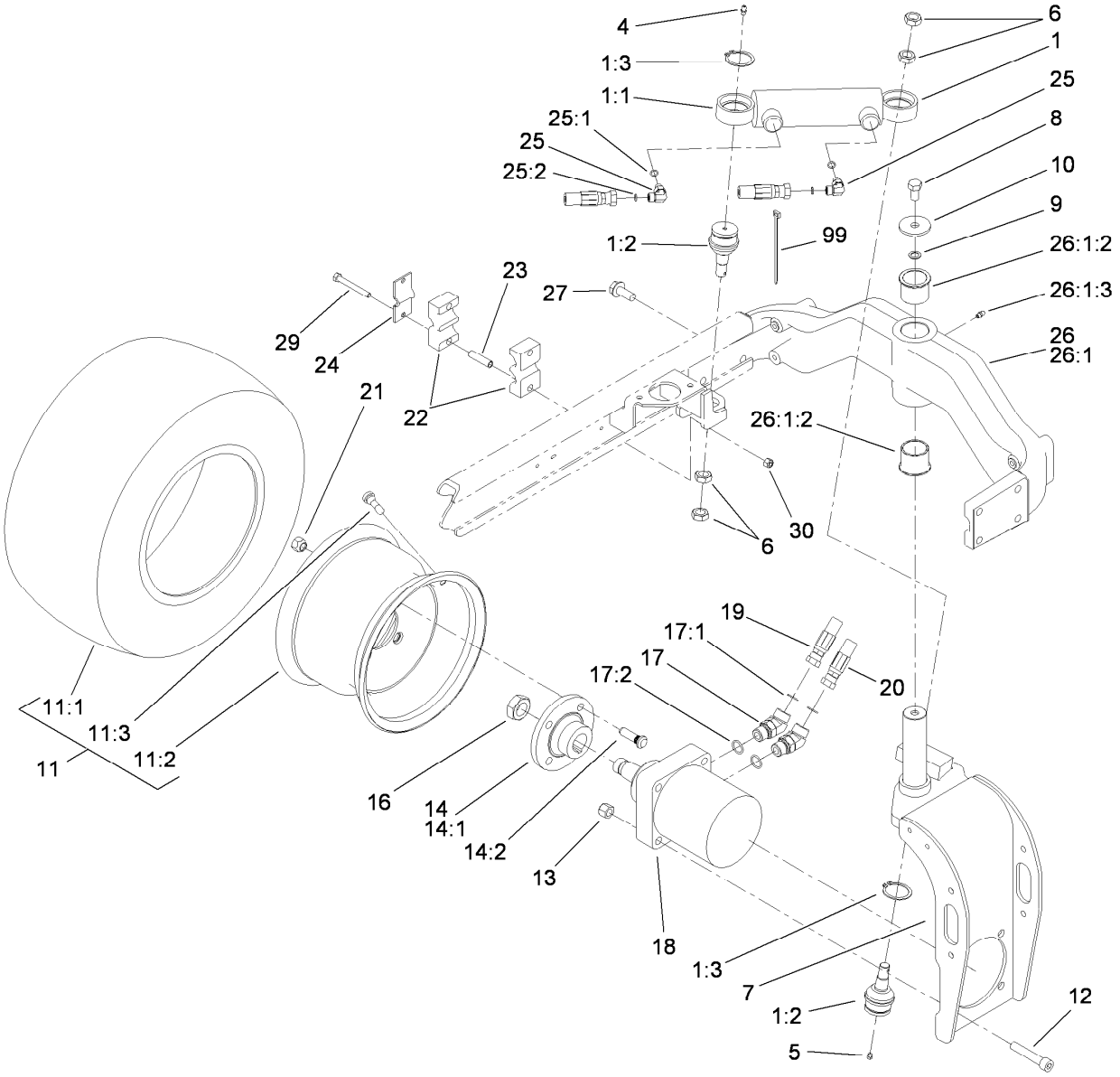

Rear Fork and Tire Assembly (continued)

Ref.	Part Number	Qty.	Description
26:1		1	Rear Casting ASM ●
26:1:2	95-8805	2	Bushing
26:1:3	302-5	1	Fitting-Grease
27	3234-38	8	Screw-HHF

Ref.	Part Number	Qty.	Description
29	322-13	2	Screw-HH
30	3296-29	2	Nut-Lock, NI
99	3290-378	5	Tie-Cable

● Not serviced separately

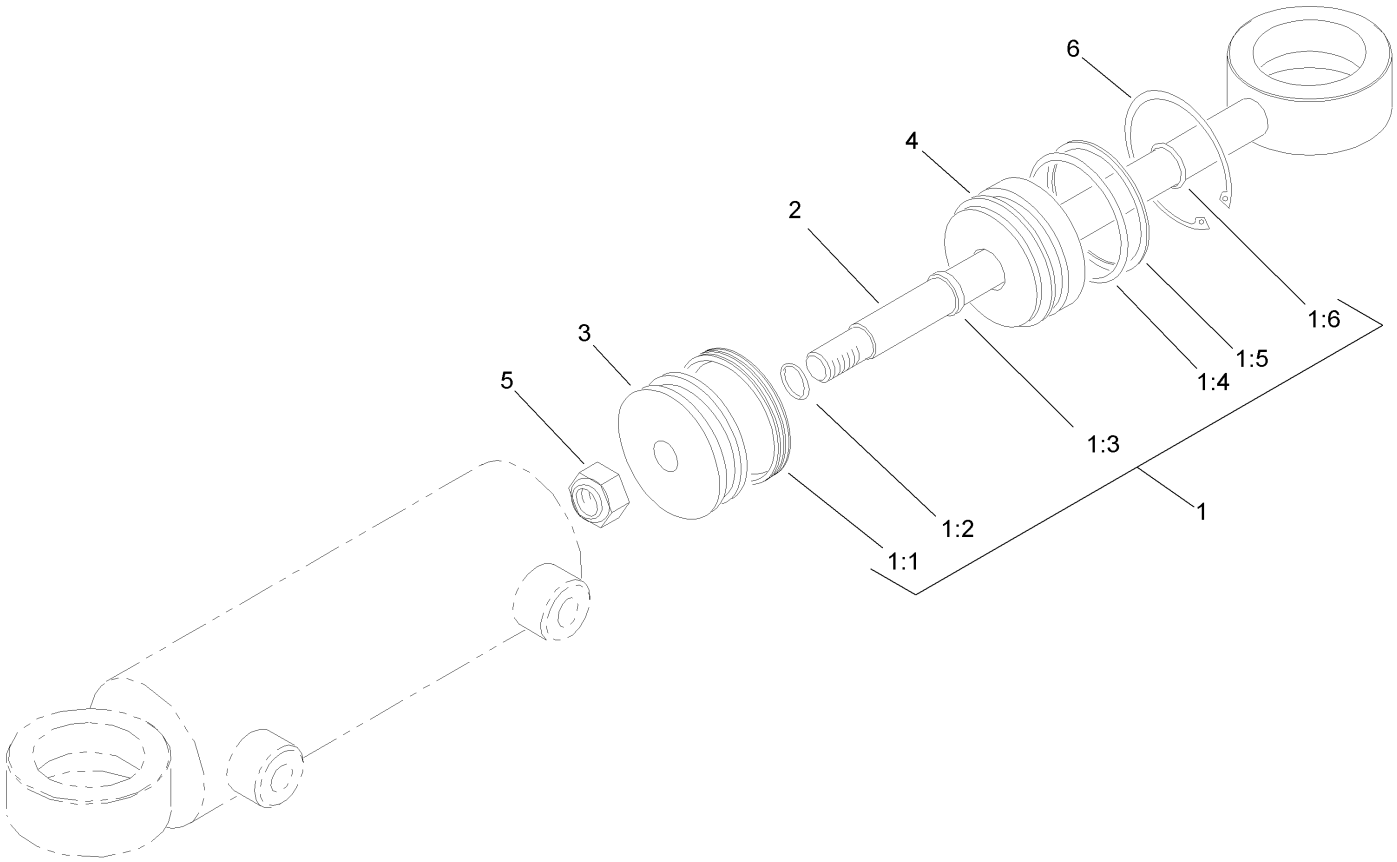

Hydraulic Cylinder Assembly No. 94-8141

Ref.	*Part Number*	*Qty.*	*Description*
1	86-5390	1	Seal Kit
1:1		1	Uniring ●
1:2		1	O-Ring ●
1:3		1	Seal-Rod ●
1:4		1	O-Ring ●
1:5		1	Ring-Backup ●
1:6		1	O-Ring ●
2		1	Rod ●
3		1	Piston ●
4		1	Gland ●
5		1	Nut-Lock ●
6		1	Ring-Retaining ●

● Not serviced separately

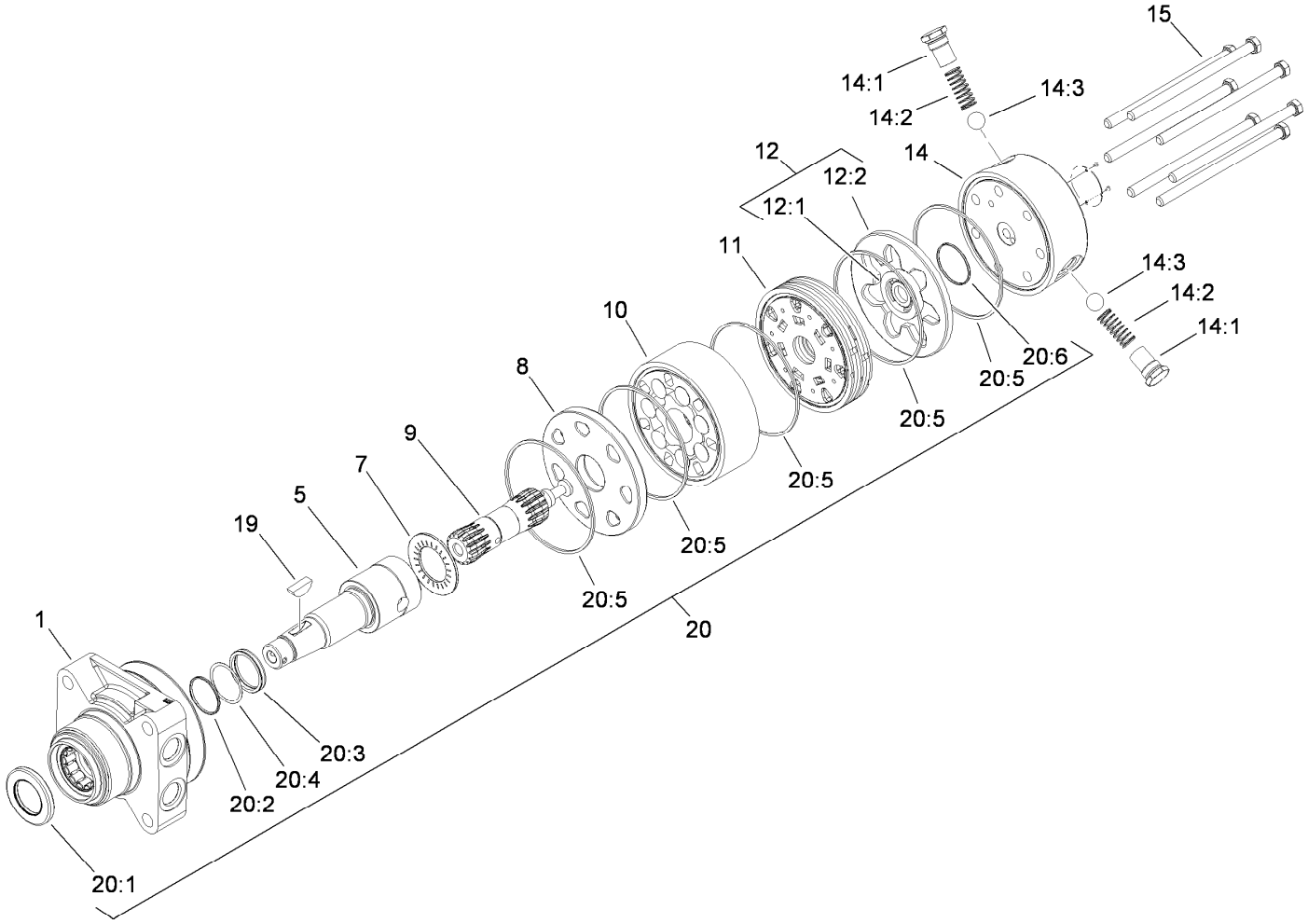

Hydraulic Motor Assembly No. 95-8694

Ref.	Part Number	Qty.	Description
1	76-0810	1	Housing ASM
5	99-3090	1	Shaft-Coupling
7	76-0850	1	Bearing-Thrust
8	76-0870	1	Plate-Wear
9	99-3537	1	Link-Drive
10	99-3539	1	Set-Rotor
11	99-3535	1	Manifold
12	76-0880	1	Commutator ASM
12:1		1	Commutator ●
12:2		1	Ring-Commutator ●
14	99-3538	1	End Cover ASM
14:1		1	Spring Cap And O-Ring ASM ●

Ref.	Part Number	Qty.	Description
14:2	99-3541	1	Spring
14:3	99-3540	1	Ball
15	99-3536	7	Screw-HH
19	3257-42	1	Key-Woodruff
20	94-8178	1	Seal Kit
20:1		1	Seal-Dirt And Water ●
20:2		1	Backup-Ring ●
20:3		1	Seal-Shaft ●
20:4		1	Washer-Backup ●
20:5		5	Seal-Square, Ring (Inner) ●
20:6		1	Seal-Commutator ●

● Not serviced separately

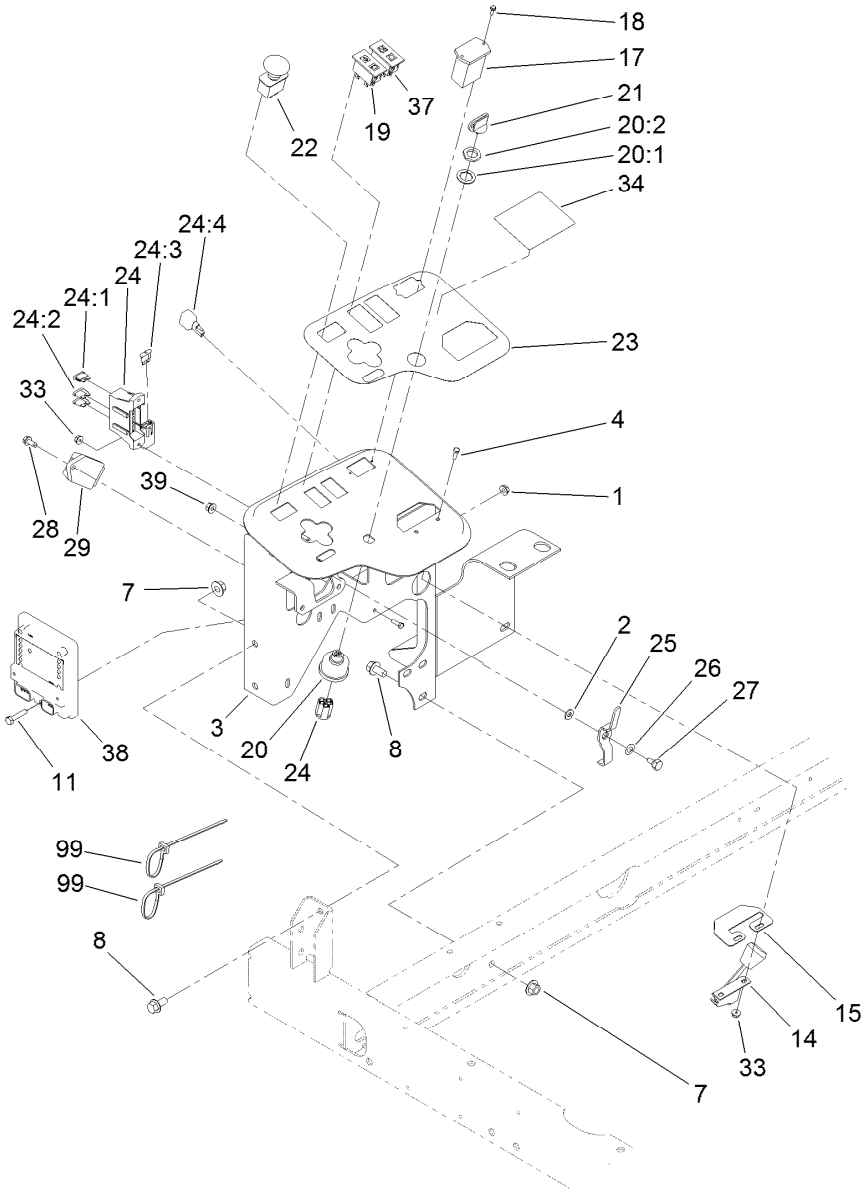

Control Panel Assembly

Ref.	Part Number	Qty.	Description
1	32128-33	3	Nut-HF
2	3256-22	1	Washer-Flat
3	115-3496-03	1	Panel-Control
4	3290-134	4	Screw
7	32128-43	5	Nut-Flange
8	3234-1	5	Screw-HHF
11	321-8	3	Screw-HH
14	110-8795	1	Cable-Throttle
15	104-0421	1	Plate-Stop, Throttle
17	75-6820	1	Hourmeter
18	32144-18	2	Screw-HWH
19	100-8070	1	Lamp-Warning
20	104-2541	1	Ignition Switch ASM
20:1	218-461	1	Nut-HH
20:2	3254-5	1	Washer-Lock
21	63-8360	2	Key-Ignition
22	93-9999	1	Switch-PTO
23	121-3582	1	Decal-Console

Ref.	Part Number	Qty.	Description
24	122-0258	1	Harness-Wire
24:1	218-578	1	Fuse-Blade, 10 Amp
24:2	109355	1	Fuse-Blade, 15 Amp
24:3	94-6710	1	Fuse-2 Amp
24:4	100-4918	1	Diode
25	99-3401-03	1	Lever-Valve, Lock
26	3290-477	1	Washer-Curved
27	63-3410	1	Screw-Shoulder
28	32144-10	1	Screw-HWH
29	98-7611	1	Controller-Glow
33	3290-148	4	Nut-HF
34	99-3558	1	Decal-Console, CE
37	100-8071	1	Lamp-Warning
38	106-9277	1	Module-Control, Standard
39	32128-32	1	Nut-HHF
99	3290-378	3	Tie-Cable
99	3290-379	4	Tie-Cable

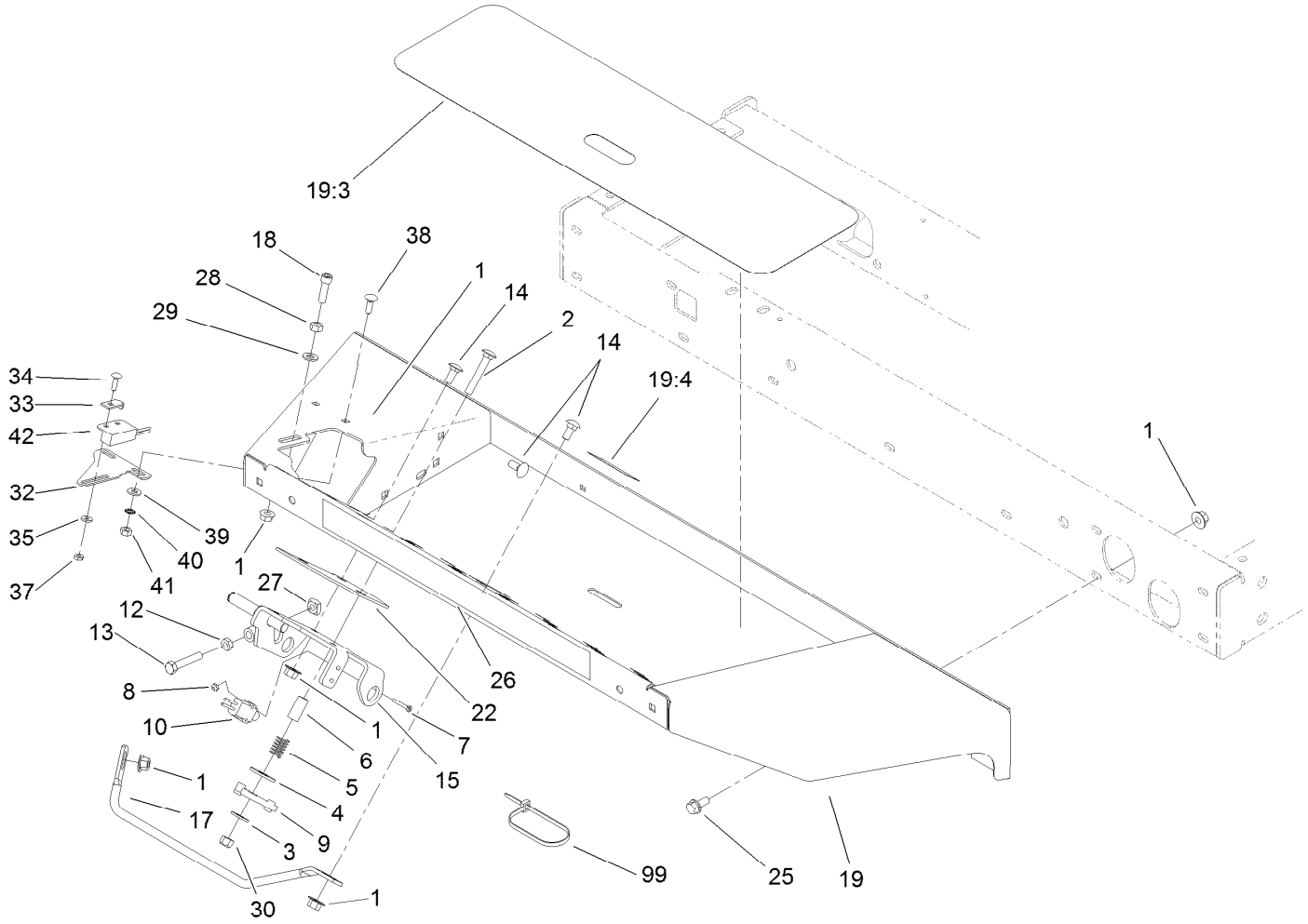

Front Platform Assembly

Ref.	Part Number	Qty.	Description
1	32128-20	18	Nut-HF
2	3230-6	1	Bolt-CARR
3	3256-3	1	Washer-Flat
4	3256-40	1	Washer-Flat
5	65-9940	1	Spring
6	95-8866	1	Tube-Arm, Rocker
7	32105-9	2	Screw
8	3296-9	2	Nut-Hex
9	99-3593	1	Arm-Rocker
10	95-8900	1	Switch
12	3218-2	1	Nut-Jam
13	322-41	1	Screw-HH
14	3230-23	7	Screw-CARR
15	95-8869-03	1	Bracket-Pedal, Traction
17	95-8893	1	Bar-Deflector
18	3274-22	1	Screw-HSH
19	106-4154	1	Floorplate ASM
19:3	99-3478	1	Tread-Foot
19:4	99-3444	1	Decal-Mow / Transport

Ref.	Part Number	Qty.	Description
22	106-2661-01	1	Plate-Support
25	3234-5	10	Screw-HHF
26	99-3388	1	Decal
27	99-3565	1	Nut-Square
28	3217-6	1	Nut-Hex
29	3256-23	1	Washer-Plain
30	3296-29	1	Nut-Lock, NI
32	100-4871	1	Bracket-Switch, Neutral
33	100-4872	1	Plate-Switch, Neutral
34	3229-20	1	Screw-CARR
35	3256-14	1	Washer-Flat
37	3296-2	1	Nut-Lock, NI
38	3229-1	2	Bolt-CARR
39	3256-22	2	Washer-Flat
40	3255-7	2	Washer-Lock/EXT
41	3217-5	2	Nut-Hex
42	100-1270	1	Switch-Proximity
99	3290-379	2	Tie-Cable

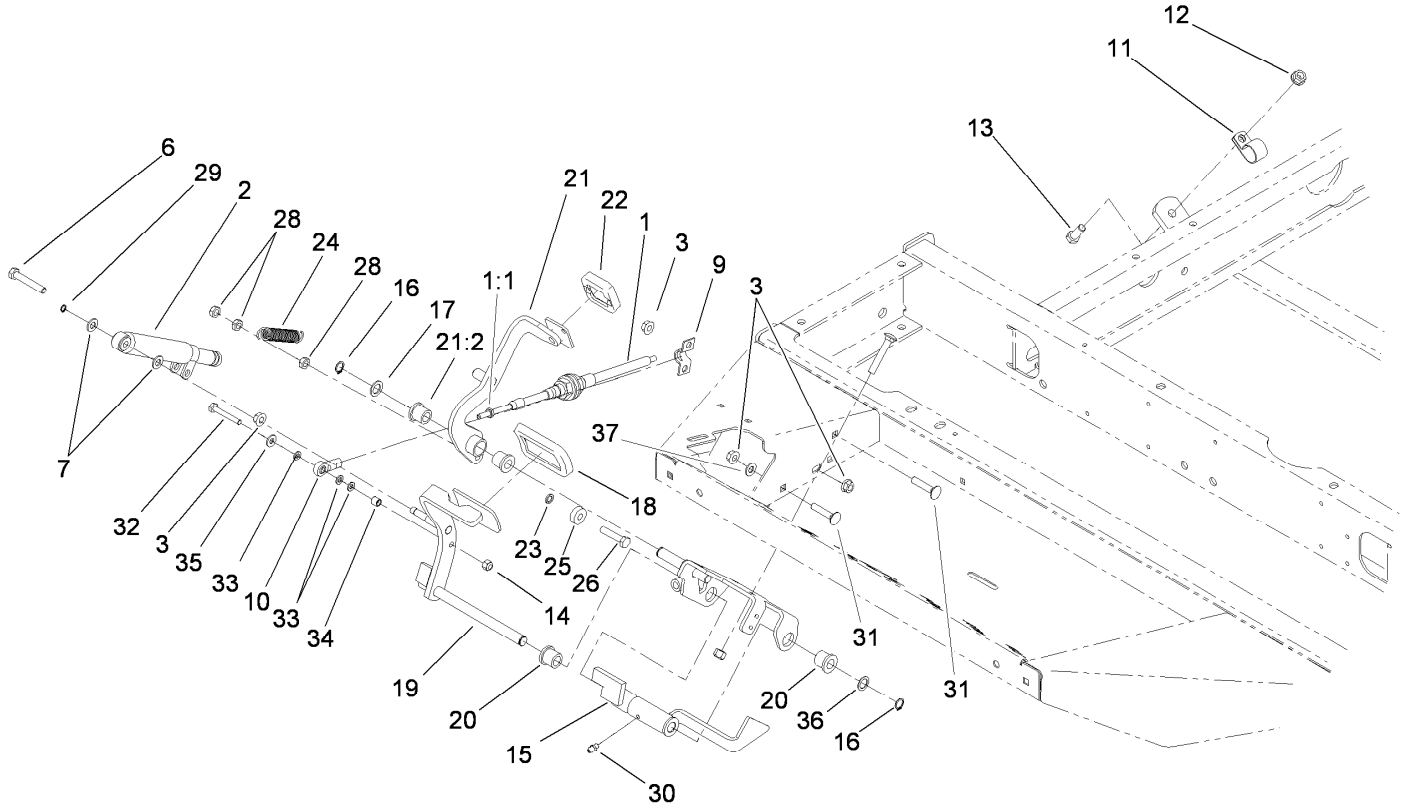

Traction Pedal Assembly

Ref.	Part Number	Qty.	Description
1	100-4815	1	Cable-Control, Traction
1:1	3220-1	2	Nut-Jam
2	76-8870	1	Damper-Lever
3	32128-20	5	Nut-HF
6	322-10	1	Screw-HH
7	3256-23	2	Washer-Plain
9	93-2092	1	Clamp-Cable
10	2411-41	1	Rod End-Ball Joint
11	2412-41	1	Clamp-R
12	3290-357	1	Nut-HHF, Whiz
13	323-6	1	Screw-HH
14	3296-42	1	Nut-Lock, NI
15	95-8861	1	Slide
16	32151-84	2	Ring-Shaft, EXT
17	41-8440	1	Washer
18	74-9100	1	Pad-Pedal, Forward
19	104-4852-03	1	Pedal-Traction
20	256-243	2	Bearing-Flange

Ref.	Part Number	Qty.	Description
21	99-3379	1	Pedal-Reverse
21:2	256-243	2	Bearing-Flange
22	74-9110	1	Pad-Pedal, Reverse
23	75-5470	1	Spacer-Bearing
24	99-3476	1	Spring-Extension
25	251-259	1	Bearing-Ball
26	322-7	1	Screw-HH
28	3296-47	3	Nut-Lock, NI
29	32151-3	1	Ring-Grip
30	302-5	1	Fitting-Grease
31	3230-27	1	Screw-CARR
32	321-10	1	Screw-HH
33	33093-00	3	Washer-Flat
34	99-3545	1	Spacer
35	3256-22	1	Washer-Flat
36	73-0040	4	Washer-Thrust
37	3256-24	1	Washer-Flat

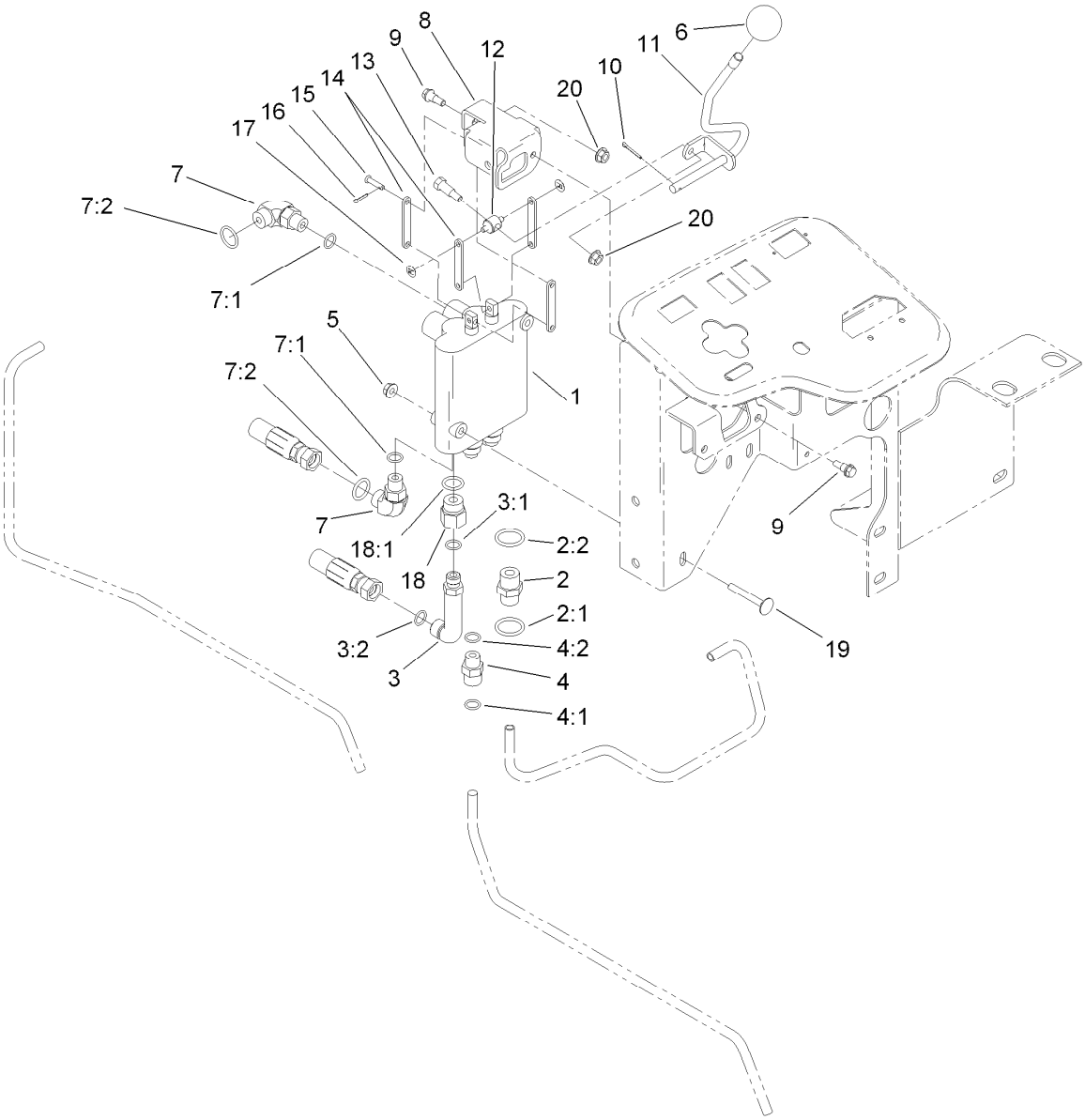

Control Valve Installation Assembly

Ref.	Part Number	Qty.	Description
1	95-8581	1	2-Spool Control Valve ASM
2	340-3	1	Fitting-Straight
2:1	237-22	1	O-Ring
2:2	237-79	1	O-Ring
3	69-4320	1	Fitting-HYD, 90 DEG
3:1	237-22	1	O-Ring
3:2	237-42	1	O-Ring
4	340-2	1	Fitting-Straight
4:1	237-22	1	O-Ring
4:2	237-42	1	O-Ring
5	32128-33	2	Nut-HF
6	233-42	1	Knob
7	340-77	2	Fitting-Elbow, 90 DEG
7:1	237-22	1	O-Ring
7:2	237-42	1	O-Ring

Ref.	Part Number	Qty.	Description
8	95-8633	1	Bracket-Valve, Actuator
9	42-3560	2	Bolt-Shoulder
10	3272-6	1	Pin-Cotter
11	95-8635	1	Lever-Valve
12	95-8638	1	Trunnion-Valve, Actuator
13	92-8916	1	Bolt-Shoulder
14	95-8634	4	Link
15	283-16	3	Pin-Clevis
16	3272-1	3	Pin-Cotter
17	32151-106	2	Ring-Retaining
18	353-397	1	Reducer-Adapter
18:1	237-79	1	O-Ring
19	3230-33	2	Screw-CARR
20	32128-32	3	Nut-HHF

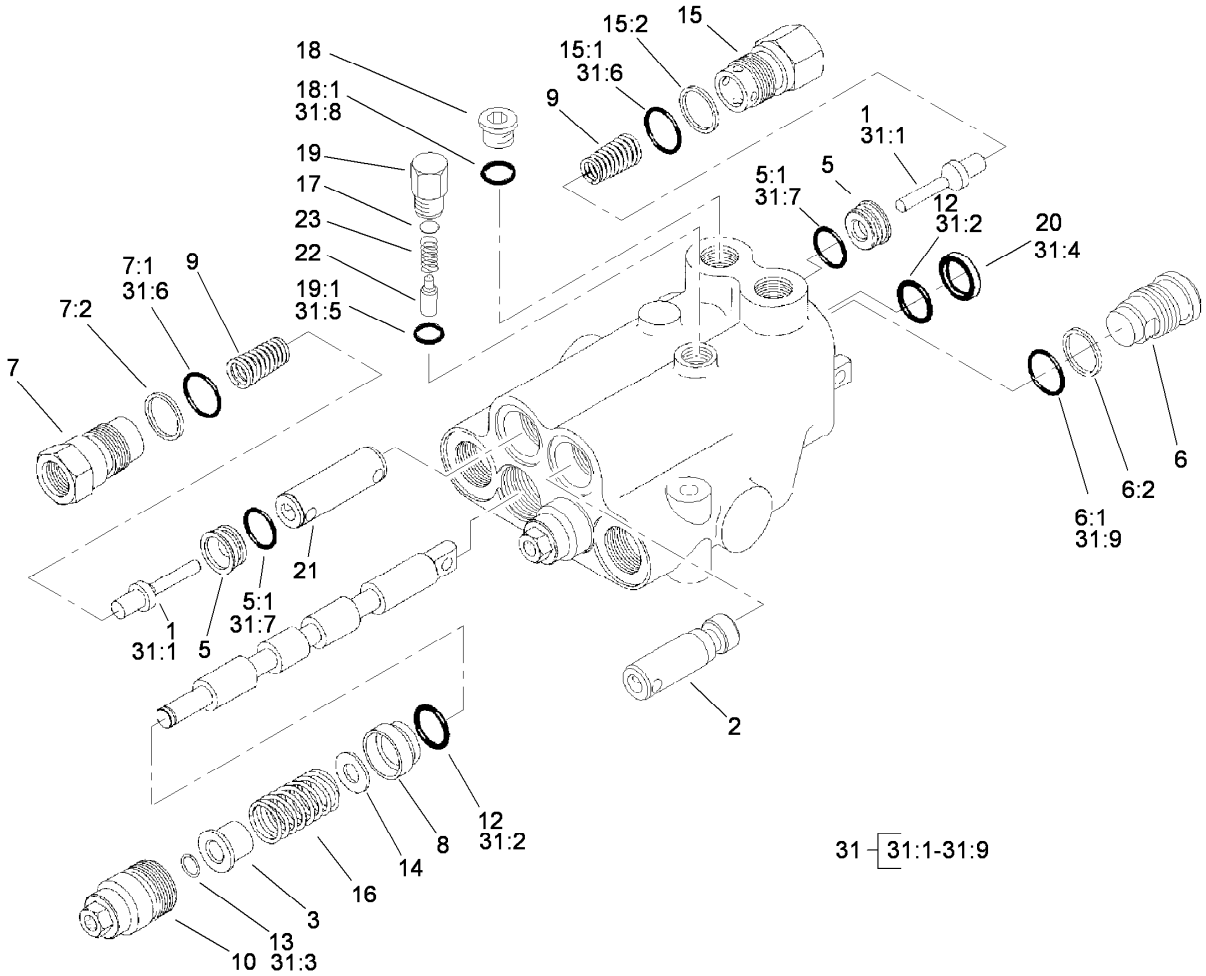

Valve Assembly No. 95-8581

Ref.	Part Number	Qty.	Description
1	58-6290	3	Poppet
2	69-1840	1	Plunger
3	58-6310	2	Spacer
5	58-6330	3	Seat
5:1	58-6340	1	O-Ring
6	58-6350	1	Plug
6:1	60-5720	1	O-Ring
6:2	58-6370	1	Washer
7	69-1800	2	Plug ASM
7:1	60-5720	1	O-Ring
7:2	58-6370	1	Washer
8	58-6400	2	Bushing
9	69-1810	3	Spring
10	58-6420	2	Cap
12	58-6450	4	O-Ring
13	58-6460	2	Ring-Retaining
14	65-2770	2	Washer
15	99-3526	1	Plug ASM
15:1	60-5720	1	O-Ring
15:2	59-7730	1	Washer-Backup

Ref.	Part Number	Qty.	Description
16	99-3531	2	Spring
17	60-6450	1	Disc
18	353-989	1	Plug-Hex, Hollow
18:1	237-42	1	O-Ring
19	58-6780	1	Plug
19:1	58-6790	1	O-Ring
20	58-6320	2	Wiper
21	99-3528	1	Plunger
22	58-6770	1	Plunger
23	58-6760	1	Spring
31	99-3530	1	Seal Kit
31:1	58-6290	3	Poppet
31:2	58-6450	4	O-Ring
31:3	58-6460	2	Ring-Retaining
31:4	58-6320	2	Wiper
31:5	58-6790	1	O-Ring
31:6	60-5720	4	O-Ring
31:7	58-6340	2	O-Ring
31:8	237-42	1	O-Ring
31:9	59-7730	2	Washer-Backup

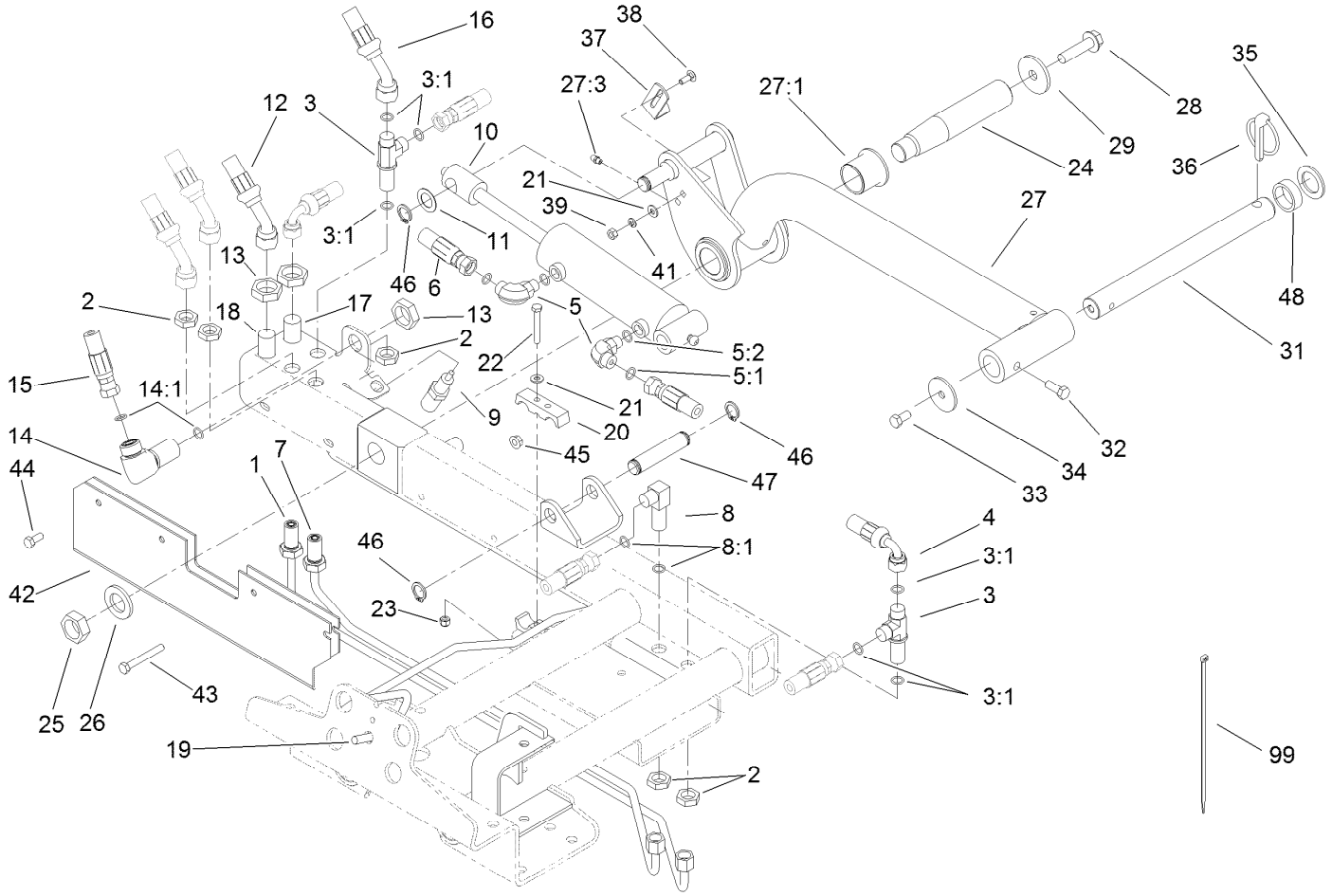

Rear Lift Arm Assembly

Ref.	Part Number	Qty.	Description
1	95-8984	1	Tube-HYD
2	340-70	5	Nut-Lock
3	340-68	2	Fitting-Tee, Bulkhead
3:1	237-22	3	O-Ring
4	95-8831	1	Hose-HYD
5	340-77	2	Fitting-Elbow, 90 DEG
5:1	237-22	1	O-Ring
5:2	237-42	1	O-Ring
6	95-8823	1	Hose ASM
7	95-8983	1	Tube-HYD
8	340-154	1	Union-Bulkhead
8:1	237-22	2	O-Ring
9	93-6762	1	Switch-Ball
10	112-9916	1	HYD Cylinder ASM
11	3-6498	1	Washer-Thrust
12	95-8820	1	Hose ASM
13	340-127	3	Nut-Bulkhead
14	93-9151	1	Fitting-HYD
14:1	237-30	2	O-Ring
15	95-8824	1	Hose ASM
16	115-3411	1	Hose-HYD

Ref.	Part Number	Qty.	Description
17	95-8980	1	Tube ASM
18	95-8981	1	Tube ASM
19	95-8982	1	Tube ASM
20	93-2509	2	Clamp-Tube
21	3256-22	6	Washer-Flat
22	321-11	2	Screw-HH
23	3296-42	2	Nut-Lock, NI
24	95-8990	1	Shaft-Pivot, Rear
25	3220-9	1	Nut-Jam
26	86-1480	1	Washer
27	115-3475	1	Rear Liftarm ASM
27:1	69-6470	2	Bushing-Castor
27:3	302-5	1	Fitting-Grease
28	3234-27	1	Screw-HHF
29	75-7730	1	Washer-Thrust
31	104-1392	1	Shaft-Pivot
32	323-6	1	Screw-HH
33	323-4	1	Screw-HH
34	63-7400	1	Washer-Rebound
35	3-6781	1	Washer-Thrust
36	283-71	1	Pin-Lynch

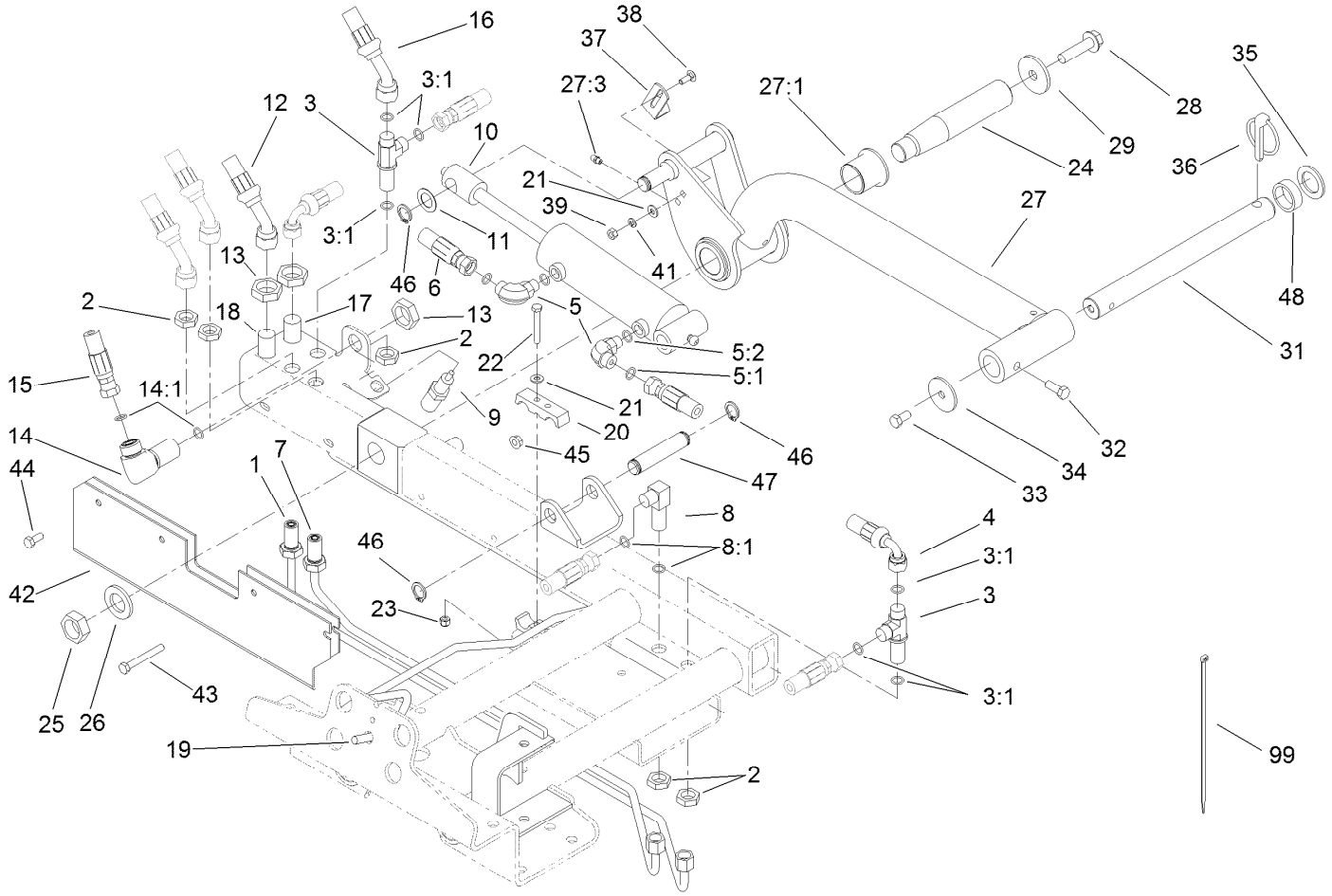

Rear Lift Arm Assembly (continued)

Ref.	Part Number	Qty.	Description
37	95-8613	1	Bracket-Switch
38	3229-1	2	Bolt-CARR
39	3217-5	2	Nut-Hex
41	3253-3	2	Washer-Lock
42	104-0453-03	1	Guard
43	322-12	2	Screw-HH
44	322-3	2	Screw-HH

Ref.	Part Number	Qty.	Description
45	32128-20	4	Nut-HF
46	32120-93	3	Ring-Retaining
47	95-8575	1	Pin-Clevis
48	63-0070	1	Spacer
99	3290-379	1	Tie-Cable
99	3334-945	1	Tie-Cable

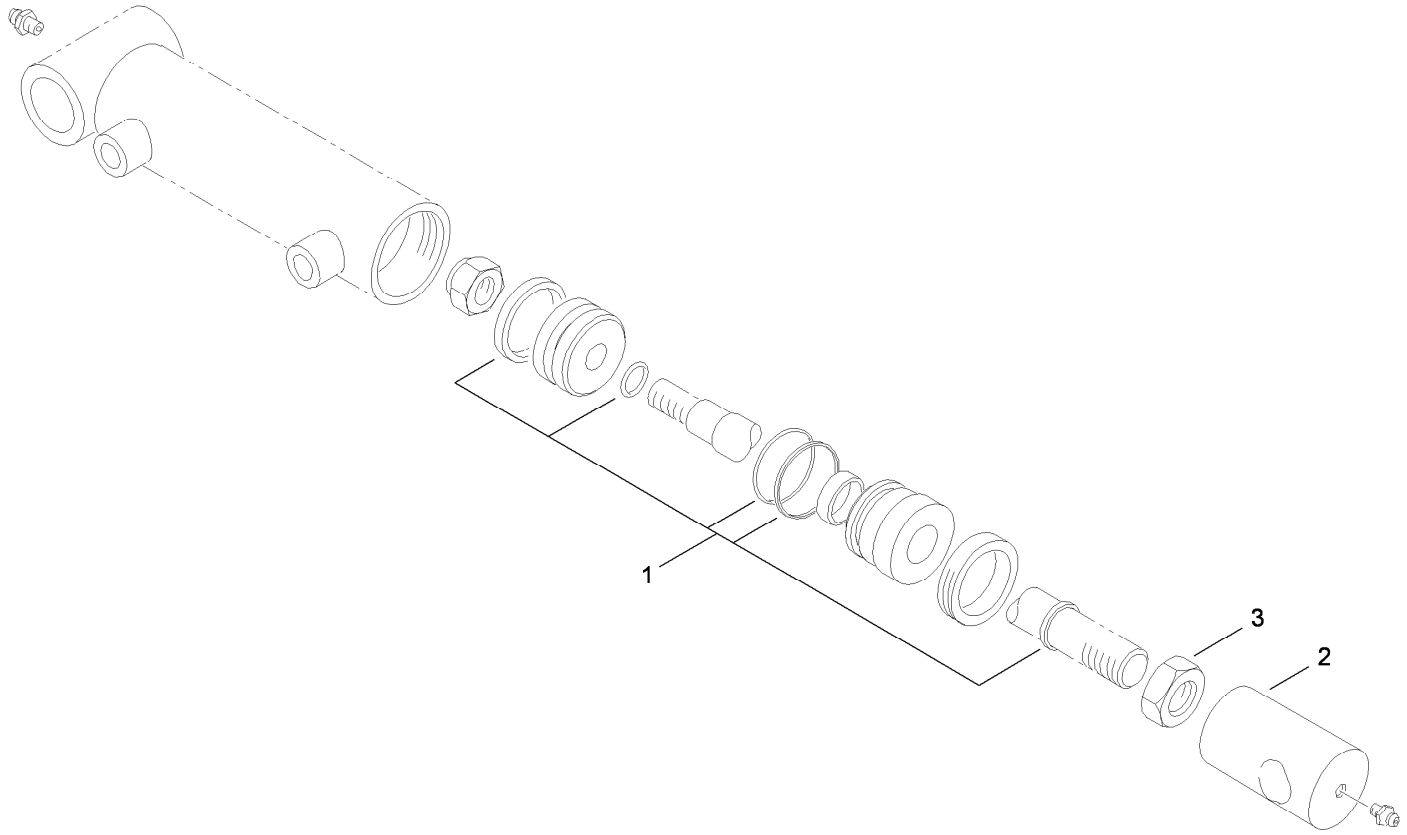

Hydraulic Cylinder Assembly No. 112-9916

Ref.	*Part Number*	*Qty.*	*Description*
1	115-3410	1	Seal Kit
2	108-9035	1	Clevis
3	3220-7	1	Nut-Jam

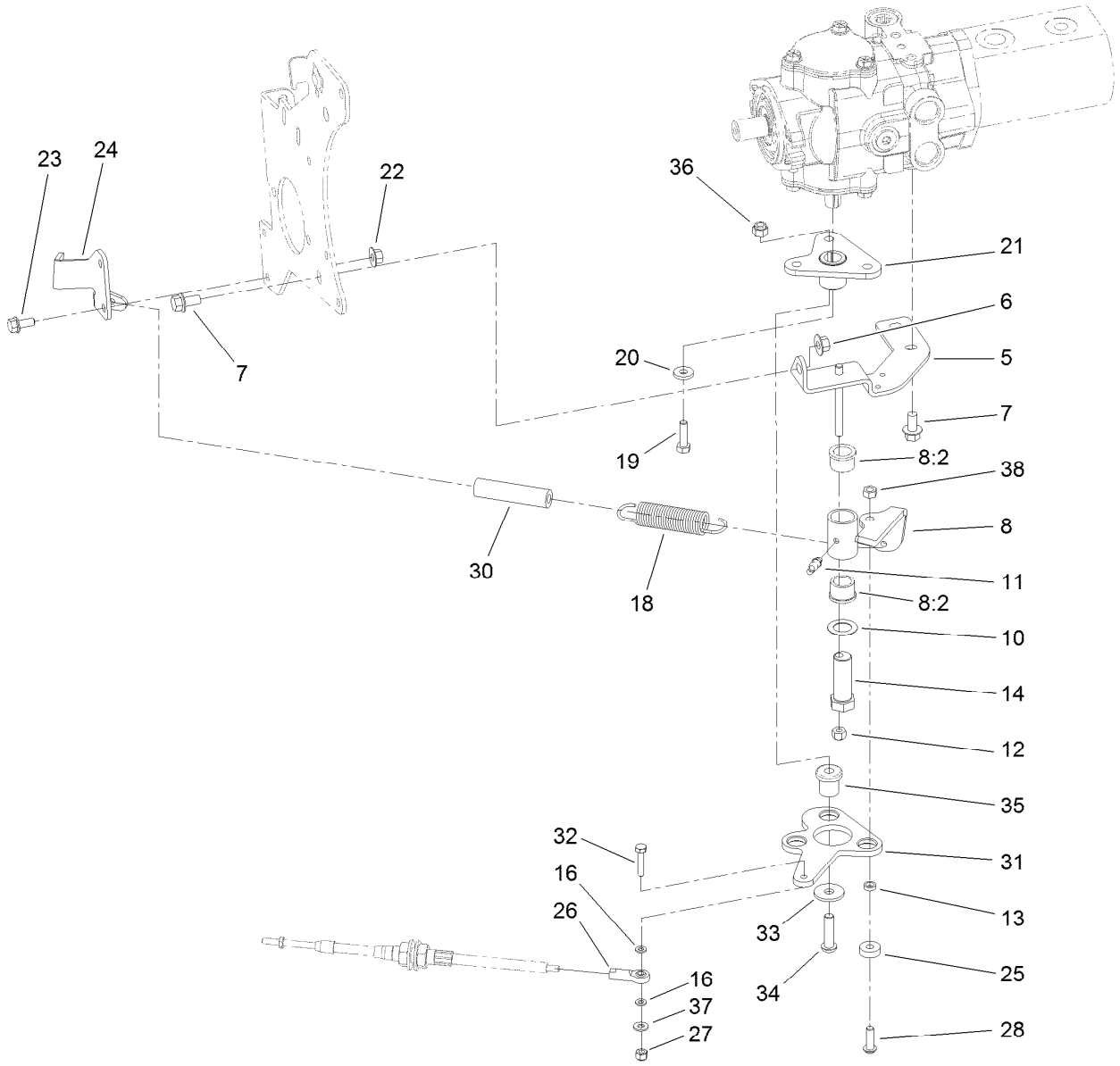

Neutral Arm Assembly

Ref.	Part Number	Qty.	Description
5	95-8960-03	1	Bracket-Neutral
6	32128-43	1	Nut-Flange
7	3234-1	3	Screw-HHF
8	104-0422	1	Neutral Arm ASM
8:2	256-113	2	Bushing-Flange
10	3-6498	1	Washer-Thrust
11	302-60	1	Fitting-Grease
12	3296-29	1	Nut-Lock, NI
13	100-4817	1	Spacer-Bearing
14	76-8640	1	Stud-Traction
16	33093-00	2	Washer-Flat
18	94-1369	1	Spring-Extension
19	3210-6	1	Screw-HH
20	88-7200	1	Washer-Flat
21	120-5566	1	Hub
22	32128-44	2	Nut

Ref.	Part Number	Qty.	Description
23	3234-5	2	Screw-HHF
24	104-0464-03	1	Bracket-Support, Cable
25	251-259	1	Bearing-Ball
26	2411-41	1	Rod End-Ball Joint
27	3296-42	1	Nut-Lock, NI
28	3274-104	1	Screw-HSBH
30	99-3556	1	Hose
31	99-3594-03	1	Lever-Pump
32	321-8	1	Screw-HH
33	2844	3	Washer
34	95-3857	3	Screw-HSBH
35	63-9750	3	Mount
36	3296-39	3	Nut-Lock, NI
37	3256-22	1	Washer-Flat
38	32153-3	1	Nut-Hex, Side Deform

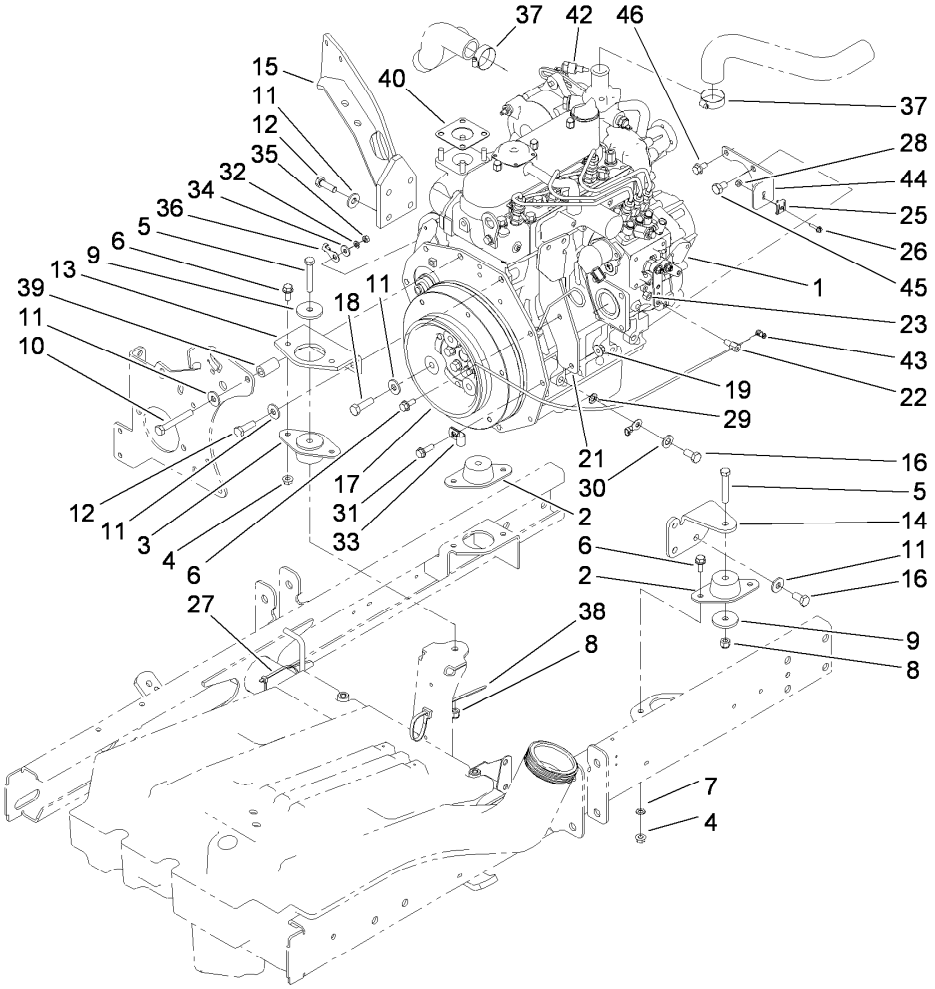

Engine Assembly

Ref.	Part Number	Qty.	Description
1	127-9659	1	Engine-Kubota, D1105
2	121-9076	2	Mount-Engine
3	93-5265	1	Mount-Engine
4	32128-20	6	Nut-HF
5	323-11	3	Screw-HH
6	3234-5	7	Screw-HHF
7	3255-8	1	Washer-Lock
8	3296-39	3	Nut-Lock, NI
9	80-8560	3	Washer-Hardened
10	42-9370	1	Screw-HH
11	80-6990	12	Washer-Hardened
12	95-8812	5	Screw-HH
13	95-8926-03	1	Mount-Engine, Front
14	95-8937-03	1	Mount-Engine, LH
15	100-4838-03	1	Mount-Engine
16	63-7790	4	Screw-Cap
17	99-3412-03	1	Pulley
18	56-2140	3	Screw-HH
19	32128-44	2	Nut
21	115-3487-03	1	Bracket-Mount, Fuel Filter
22	98-9311	1	Swivel-Throttle
23	3296-20	1	Nut-Lock, NI

Ref.	Part Number	Qty.	Description
25	81-1690	1	Clamp-Cable
26	32105-13	1	Screw-HWH
27	3290-379	2	Tie-Cable
28	3296-2	1	Nut-Lock, NI
29	3255-9	1	Washer-Lock
30	3256-25	1	Washer-Flat
31	3234-17	1	Screw-HHF
32	3256-78	1	Washer-Flat
33	2412-10	1	Clamp-R
34	43-5930	1	Washer-Lock, Spring
35	48-7890	1	Nut-Hex
36	99-3441	1	Harness-Wire, Fusible Link
37	2412-34	2	Clamp-Hose
38	3290-378	1	Tie-Cable
39	95-8736	1	Spacer
40	98-9611	1	Gasket
42	99-3582	1	Thermoswitch
43	112-9919	1	Stop-Cable, Throttle
44	110-9009-03	1	Bracket-Cable, Throttle
45	70-8470	1	Screw-HH
46	33104-016	1	Screw-HHF

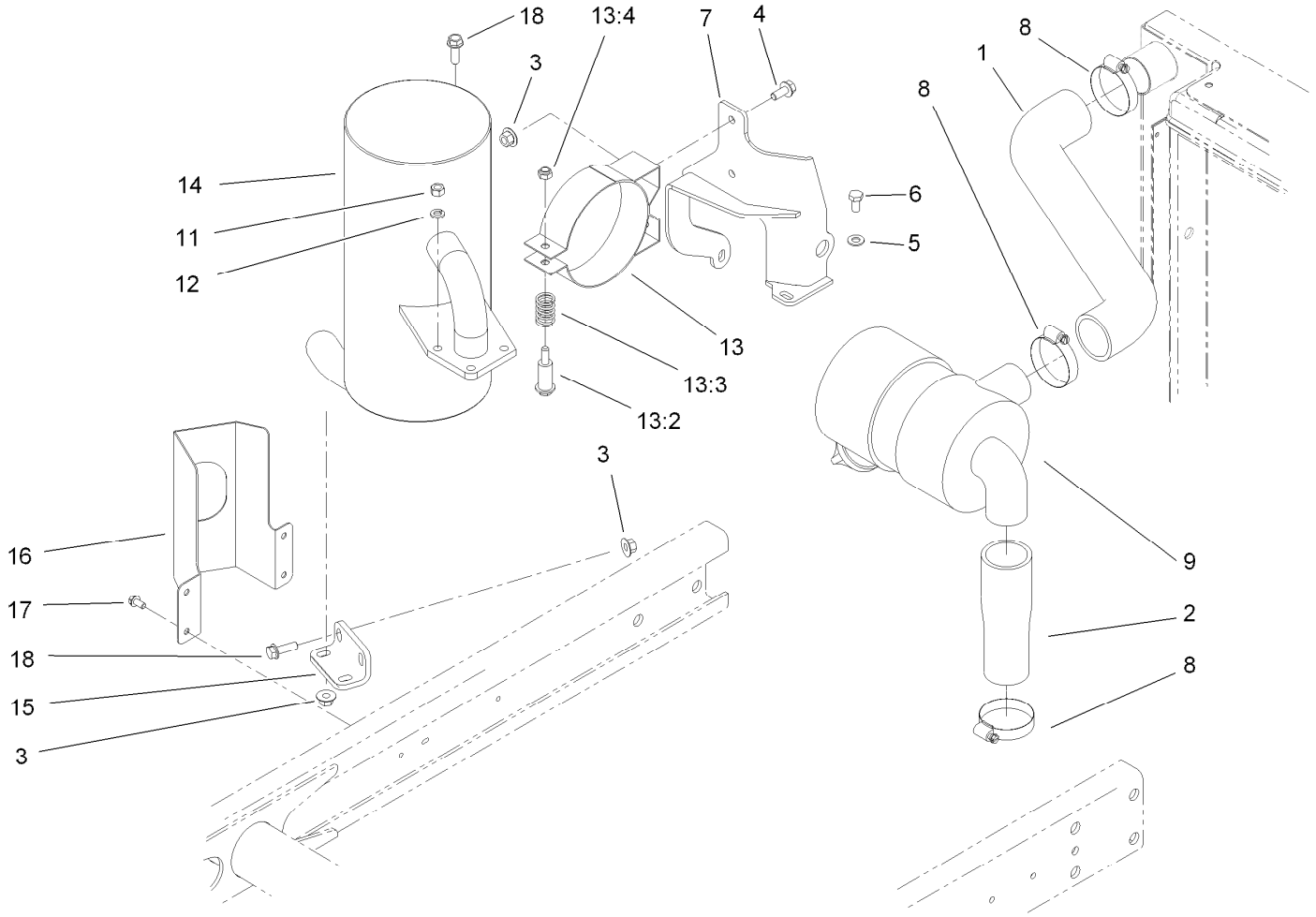

Air Cleaner and Muffler Assembly

Ref.	Part Number	Qty.	Description
1	95-8946	1	Hose-Upper, Air Inlet
2	95-8947	1	Hose-Air Inlet, Lower
3	32128-44	6	Nut
4	3234-5	3	Screw-HHF
5	3256-23	2	Washer-Plain
6	33114-016	2	Screw-HH
7	99-3355-03	1	Bracket-Filter, Air
8	2412-92	4	Clamp-Hose
9	93-2190	1	Air Cleaner ASM
11	33014-00	4	Nut-Hex
12	3253-4	4	Washer-Lock

Ref.	Part Number	Qty.	Description
13	93-2191	1	Air Cleaner Mounting Band ASM
13:2	94-3653	1	Bolt
13:3	94-3654	1	Spring
13:4	48-9510	1	Nut
14	104-4834	1	Muffler
15	95-8943-03	1	Bracket-Muffler
16	99-3425-03	1	Guard-Exhaust
17	32144-4	4	Screw-HWH
18	3234-17	3	Screw-HHF

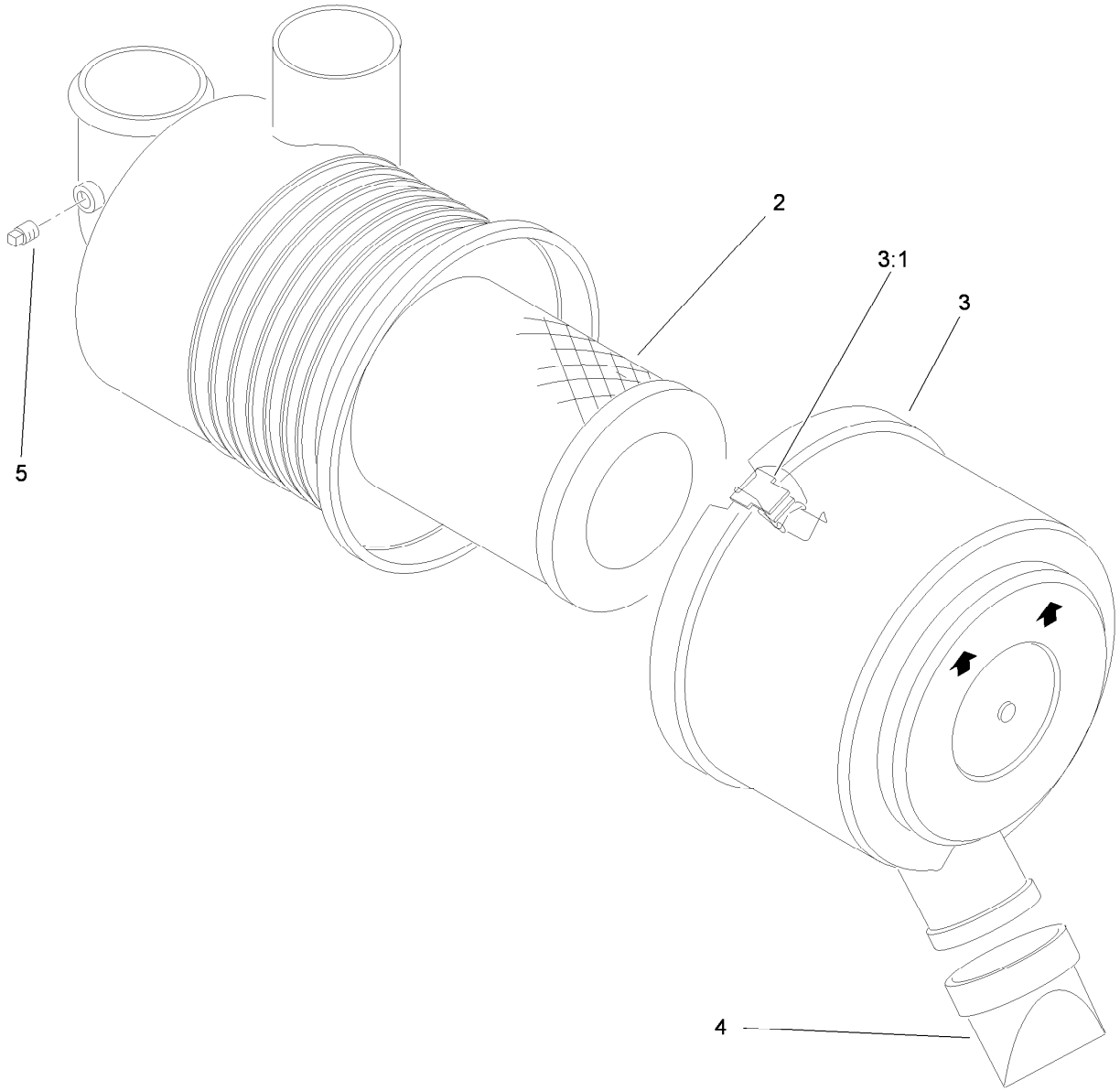

Air Cleaner Assembly No. 93-2190

Ref.	*Part Number*	*Qty.*	*Description*
2	108-3811	1	Filter-Air
3	94-3652	1	Cover ASM
3:1	1-643283	2	Latch-Cleaner, Air
4	87-9400	1	Valve-Vacuator
5	285-17	1	Plug-Pipe

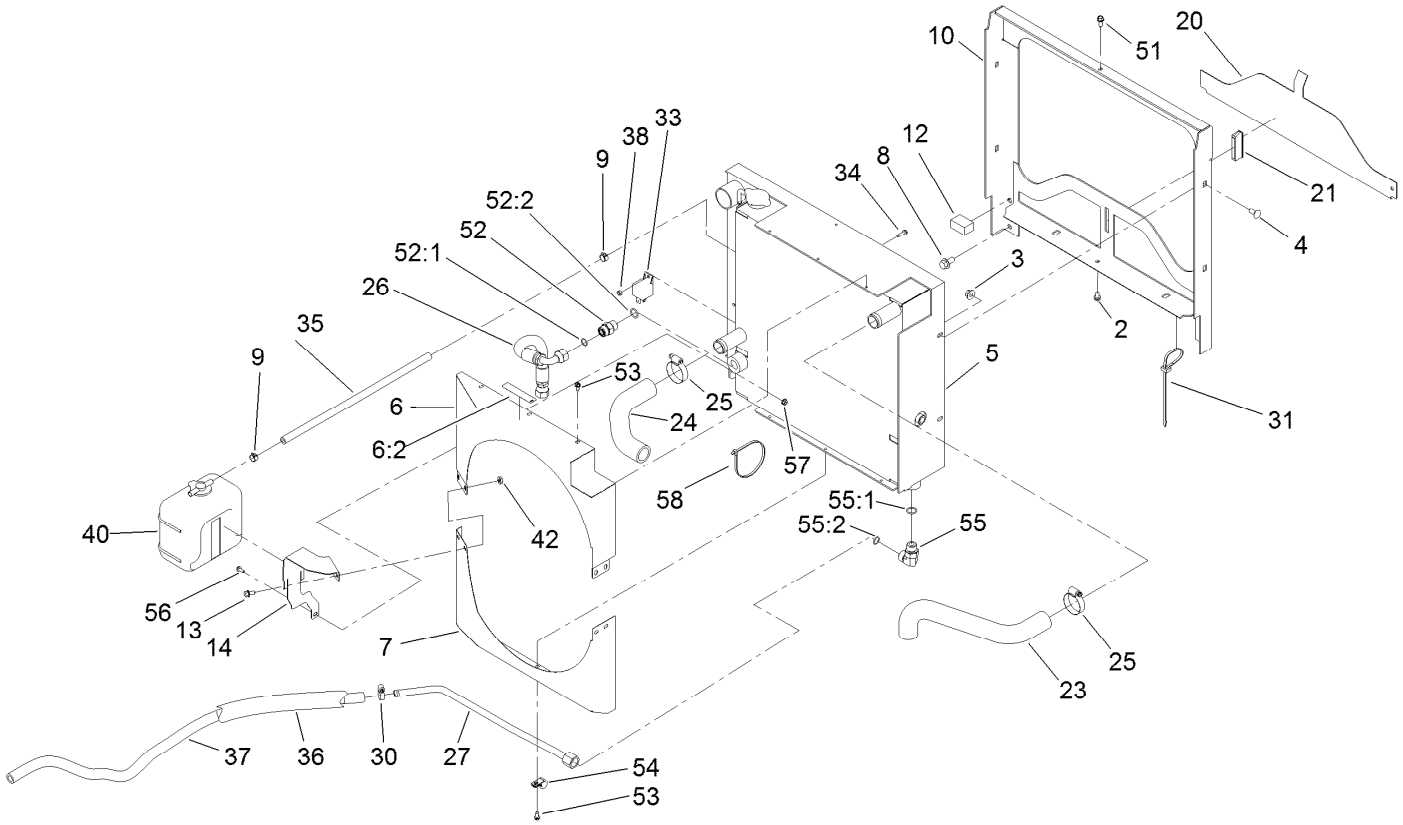

Radiator Assembly

Ref.	Part Number	Qty.	Description
2	32104-116	6	Screw-HWHTF
3	32128-44	4	Nut
4	3230-1	4	Bolt-CARR
5	120-3392	1	Radiator/Oil Cooler
6	121-3584	1	Shroud-Fan, Top
6:2	93-6681	1	Decal-Warning, Fan
7	121-6254-03	1	Shroud-Fan, Bottom
8	3234-1	4	Screw-HHF
9	92-2379	2	Clamp-Hose
10	100-4903-03	1	Frame-Radiator
12	95-8962	2	Seal-Foam, Radiator
13	3234-13	4	Screw-HHF
14	119-6749-03	1	Bracket-Mounting, Reservoir
20	95-8702-03	1	Shield-Radiator, Lower
21	99-3497	1	Magnet
23	121-3571	1	Hose-Radiator,Upper
24	119-6748	1	Hose-Radiator, Lower
25	2412-111	2	Clamp
26	104-2806	1	Hose-HYD
27	121-3572	1	Tube-HYD

Ref.	Part Number	Qty.	Description
30	2412-36	1	Clamp-Hose
31	3290-378	2	Tie-Cable
33	99-7435	1	Relay
34	32105-13	1	Screw-HWH
35	109-0274	1	Hose-Fuel
36	56-7985	1	Sleeve-Protective
37	93-6804	1	Hose
38	3296-2	1	Nut-Lock, NI
40	104-9318	1	Bottle-Overflow
42	32128-33	4	Nut-HF
51	119-2038	1	Screw-HWH
52	340-4	1	Fitting-Straight
52:1	237-30	1	O-Ring
52:2	237-79	1	O-Ring
53	9134304	6	Screw-HWH
54	2412-73	2	Clamp-R
55	340-98	1	Fitting-Elbow, 90 DEG
55:1	237-79	1	O-Ring
55:2	237-30	1	O-Ring
56	3290-321	1	Screw-HWH

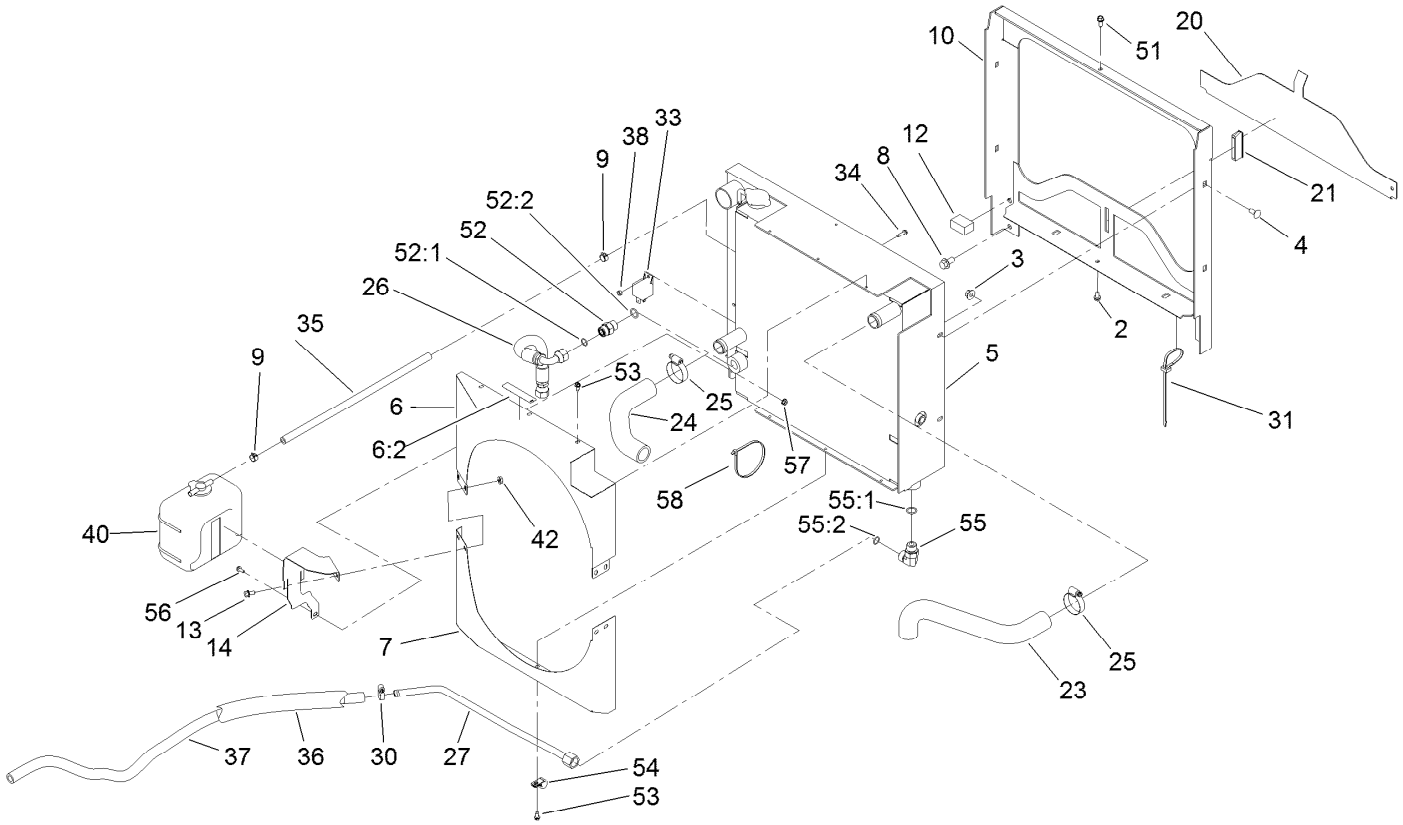

Radiator Assembly (continued)

Ref.	*Part Number*	*Qty.*	*Description*
57	32128-17	1	Nut-Lock, Flange
58	3290-379	1	Tie-Cable

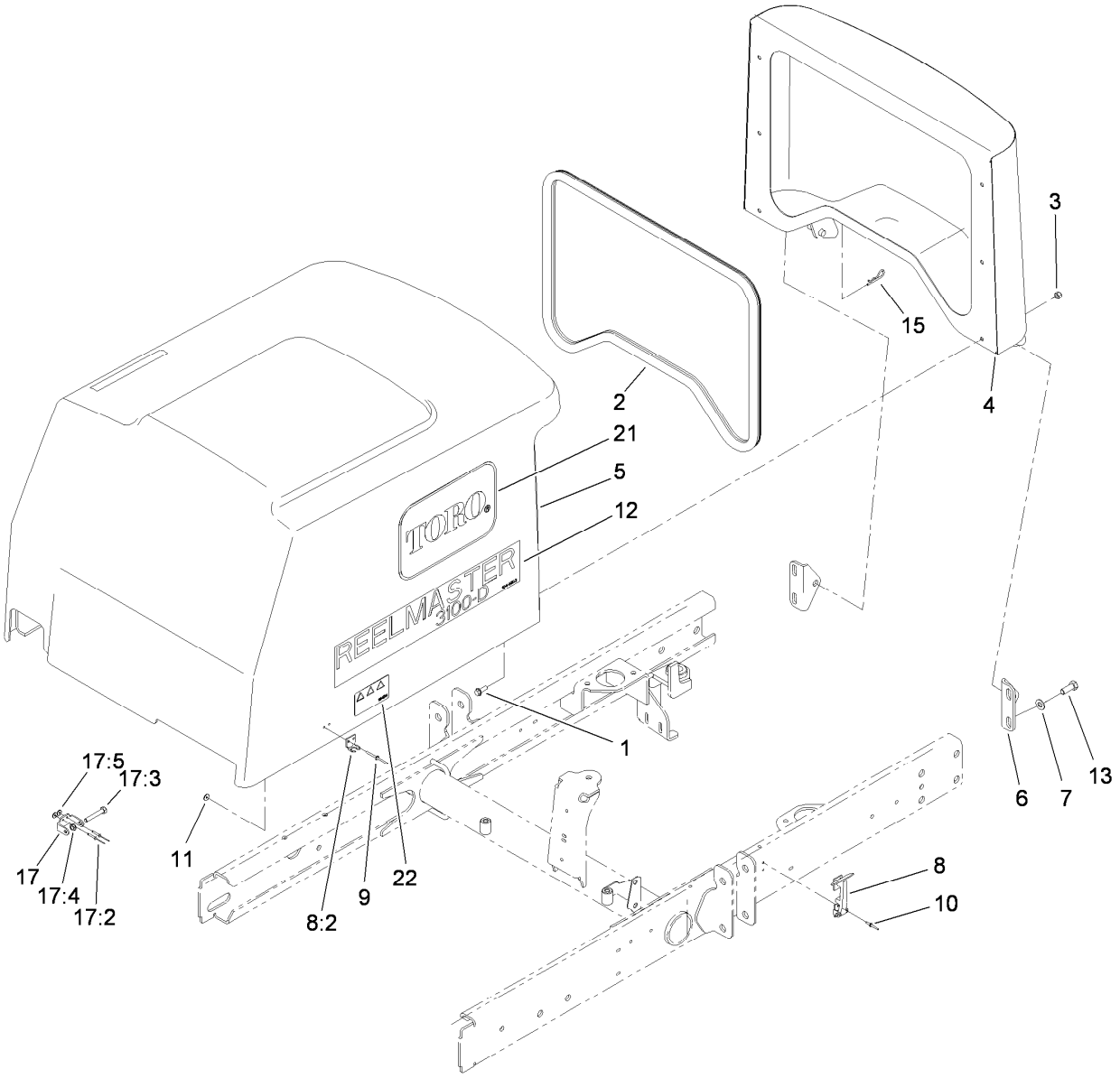

Hood Assembly

Ref.	Part Number	Qty.	Description
1	3234-4	6	Screw-HHF
2	95-8809	1	Trim-Seal
3	3296-42	6	Nut-Lock, NI
4	95-8724-03	1	Screen-Hood
5	95-8935	1	Hood ASM
5:1	106-8114	1	Heat Tape Repair Kit ●
6	95-8728	2	Bracket-Pivot, Hood
7	3256-24	8	Washer-Flat
8	59-9740	2	Flex Draw Latch ASM
8:2	249-40	1	Keeper
9	107-0333	4	Rivet-Pop
10	3290-55	4	Rivet-Pop
11	3269-10	4	Washer-Back
12	104-5153	2	Decal-Hood
13	323-6	4	Screw-HH
15	3290-467	1	Pin-Hair
17	119-2004	1	CE Latch Kit
17:2	107-0333	2	Rivet-Pop
17:3	322-10	1	Screw-HH
17:4	3296-47	1	Nut-Lock, NI
17:5	3269-10	2	Washer-Back
21	66-6140	2	Decal
22	106-6754	1	Decal-Danger

● Not illustrated

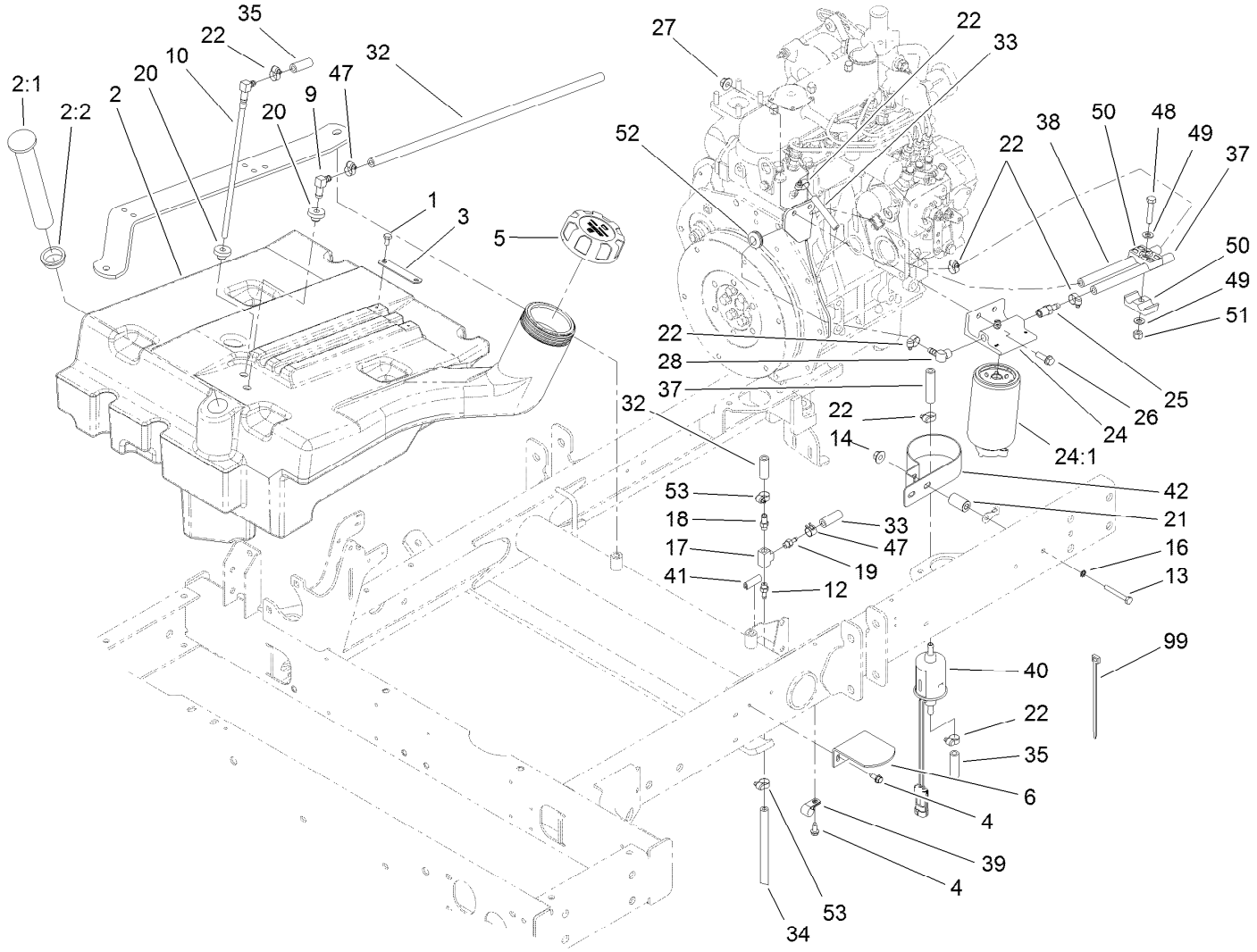

Fuel System Assembly

Ref.	Part Number	Qty.	Description
1	321-2	2	Screw-HH
2	95-8620	1	Tank-Fuel
2:1	95-8971	1	Gauge-Fuel
2:2	95-8972	1	Grommet
3	95-8881	1	Strap-Line, Fuel
4	32144-10	3	Screw-HWH
5	114-5064	1	Cap-Diesel
6	95-8968-03	1	Support-Tank, Fuel
9	46-6550	1	Fitting-Elbow, 90 DEG
10	110-9689	1	Pipe-Stand
12	304-73	1	Fitting-Straight
13	321-14	1	Screw-HH
14	32128-33	1	Nut-HF
16	3256-22	1	Washer-Flat
17	354-20	1	Fitting-Tee
18	354-21	1	Fitting-Barbed
19	354-22	1	Fitting-Barbed
20	46-6560	2	Bushing
21	77-3180	1	Spacer
22	92-2379	7	Clamp-Hose
24	110-9044	1	Separator-Filter

Ref.	Part Number	Qty.	Description
24:1	110-9049	1	Filter-Spin On
25	353-783	1	Fitting-STR
26	3234-17	2	Screw-HHF
27	32128-44	2	Nut
28	353-781	1	Fitting-HYD, 90
32	110-6187	1	Hose-Fuel
33	110-8751	1	Hose-Fuel
34	110-5701	1	Hose-Fuel
35	110-4100	1	Hose-Fuel
37	110-4109	1	Hose-Fuel
38	110-4113	1	Hose-Fuel
39	2412-73	1	Clamp-R
40	110-8806	1	Pump-Fuel
41	110-8754	1	Trim
42	110-8817	1	Bracket-Pump, Fuel
47	2412-80	2	Clamp-Hose
48	322-8	1	Screw-HH
49	3256-23	2	Washer-Plain
50	56-7971	2	Clamp-Tube
51	3296-29	1	Nut-Lock, NI
52	1-543296	1	Grommet

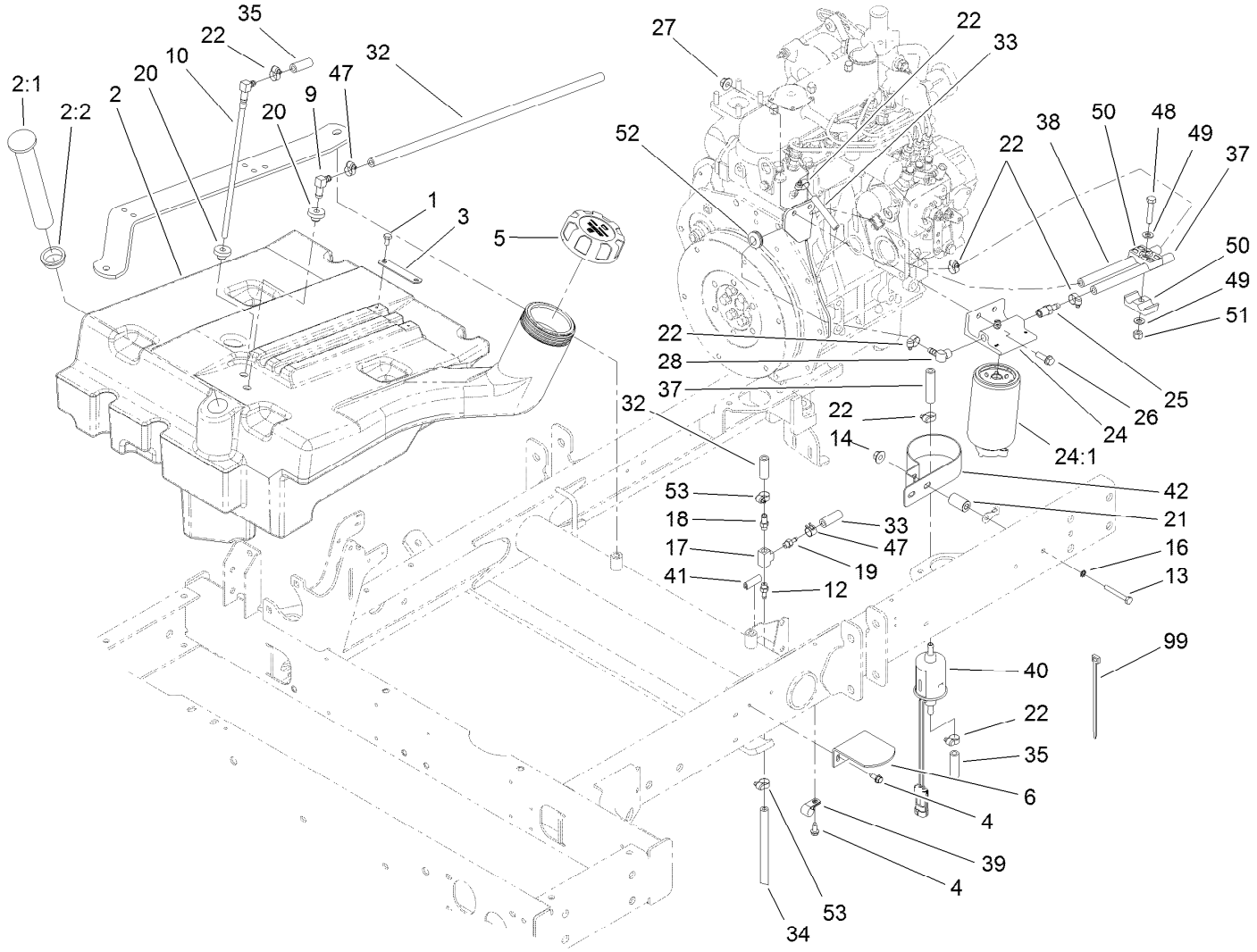

Fuel System Assembly (continued)

Ref.	*Part Number*	*Qty.*	*Description*
53	2412-108	2	Clamp-Worm
99	3290-379	2	Tie-Cable

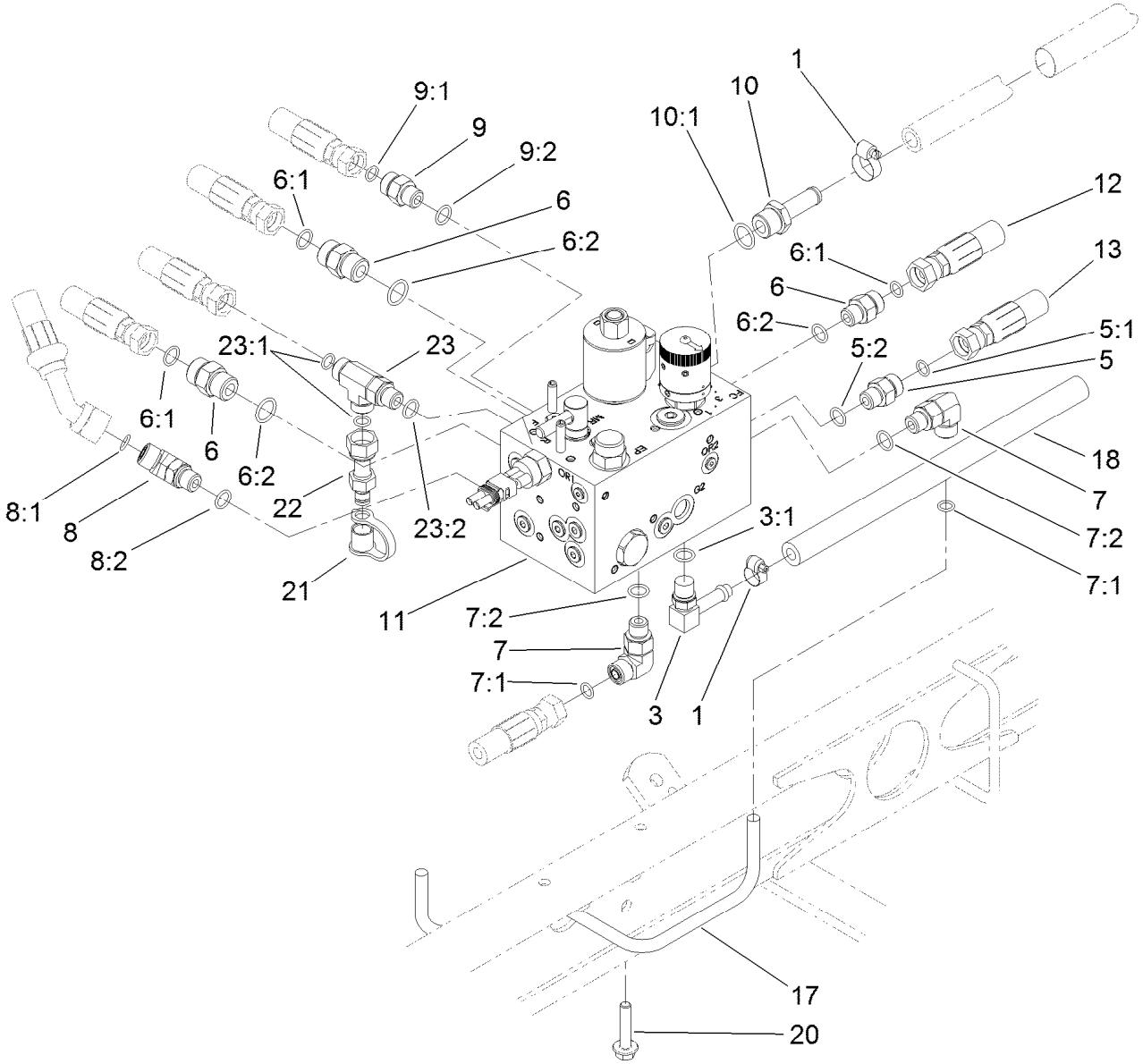

Manifold Block Assembly

Ref.	Part Number	Qty.	Description
1	2412-36	2	Clamp-Hose
3	100-4887	1	Fitting-Elbow, 90
3:1	237-42	1	O-Ring
5	340-2	1	Fitting-Straight
5:1	237-22	1	O-Ring
5:2	237-42	1	O-Ring
6	340-4	3	Fitting-Straight
6:1	237-30	1	O-Ring
6:2	237-79	1	O-Ring
7	340-77	2	Fitting-Elbow, 90 DEG
7:1	237-22	1	O-Ring
7:2	237-42	1	O-Ring
8	340-87	1	Fitting-Elbow, 45 DEG
8:1	237-22	1	O-Ring
8:2	237-42	1	O-Ring
9	340-92	1	Fitting-Straight

Ref.	Part Number	Qty.	Description
9:1	237-78	1	O-Ring
9:2	237-21	1	O-Ring
10	354-121	1	Fitting-STR
10:1	237-79	1	O-Ring
11	108-9037	1	Manifold ASM
12	95-8829	1	Hose ASM
13	106-4197	1	Hose ASM
17	95-8792	1	Tube ASM
18	80-7342	1	Hose-HYD
20	104-8300	2	Nut-HF, NI
21	354-79	1	Cap-Dust
22	86-5480	1	Nipple-Test
23	340-86	1	Fitting-Tee
23:1	237-22	2	O-Ring
23:2	237-42	1	O-Ring

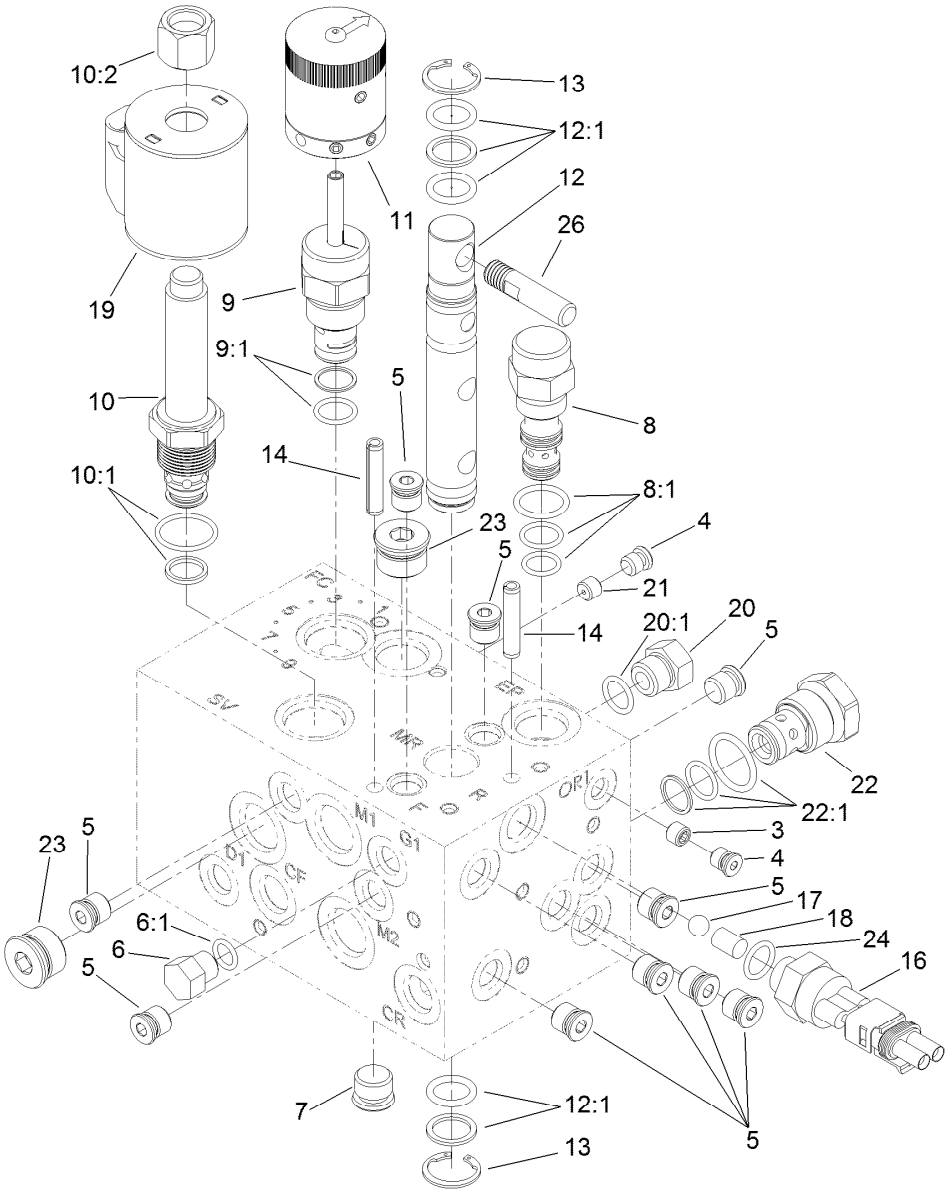

Hydraulic Manifold Assembly No. 108-9037

Ref.	Part Number	Qty.	Description
3	110-8771	1	Orifice-.020
4	106-1024	2	Plug-Leak, Zero
5	106-1025	10	Plug-HYD
6	353-512	1	Plug
6:1	237-78	1	O-Ring
7	106-1026	1	Plug-HYD
8	110-8770	1	Logic Element
8:1	110-8773	1	Seal Kit
9	110-8769	1	Valve-Control, Manual Flow
9:1	110-2633	1	Seal Kit ●
10	110-8768	1	Valve-Relief, Solenoid
10:1	110-6316	1	Seal Kit ●
10:2	110-2635	1	Nut-Coil
11	110-8767	1	Rotary Handle ASM
12	117-0108	1	Spool-Rotary

Ref.	Part Number	Qty.	Description
12:1	117-0109	1	Seal Kit
13	112-6532	2	Ring-Retaining
14	112-6531	2	Pin-Spring
16	72-4310	1	Switch-Ball
17	110-8762	1	Ball-Chrome
18	110-8761	1	Pin-Dowel
19	110-6344	1	Coil-12V, DC
20	353-508	1	Plug-HH
20:1	237-42	1	O-Ring
21	110-8760	1	Orifice-.073
22	110-8759	1	Valve-Check
22:1	110-8772	1	Seal Kit ●
23	106-1027	2	Plug
24	110-8757	1	O-Ring
26	110-8758	1	Handle-Spool

● Not illustrated

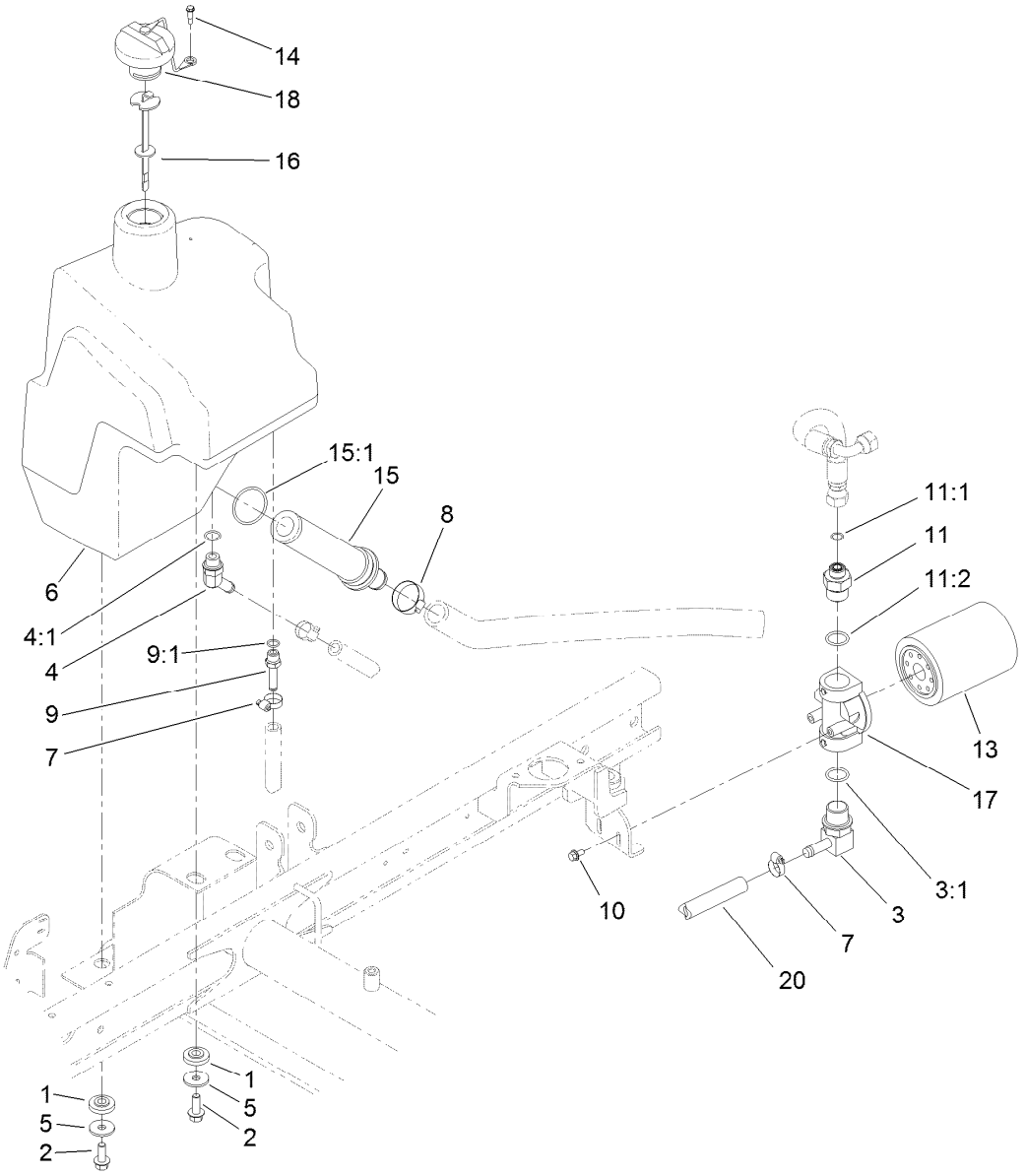

Hydraulic Tank Assembly

Ref.	Part Number	Qty.	Description
1	240-11	4	Bushing-Flange
2	3234-11	4	Screw-HHF
3	95-8814	1	Fitting-90
3:1	237-81	1	O-Ring
4	354-126	1	Fitting-Elbow, 45
4:1	237-79	1	O-Ring
5	63-8410	4	Washer
6	104-4840	1	Tank-HYD
7	2412-36	3	Clamp-Hose
8	2412-34	1	Clamp-Hose
9	353-979	1	Fitting-STR
9:1	237-42	1	O-Ring

Ref.	Part Number	Qty.	Description
10	3234-13	2	Screw-HHF
11	100-4240	1	Fitting-STR
11:1	237-30	1	O-Ring
11:2	237-81	1	O-Ring
13	54-0110	1	Filter-Oil, Transmission
14	57-5420	1	Screw-Shoulder
15	104-7546	1	Tank Strainer ASM
15:1	340-136	1	O-Ring
16	119-6968	1	Dipstick-Oil
17	92-5821	1	Head-Filter
18	93-7160	1	Cap-Oil, HYD
20	99-3501	1	Hose

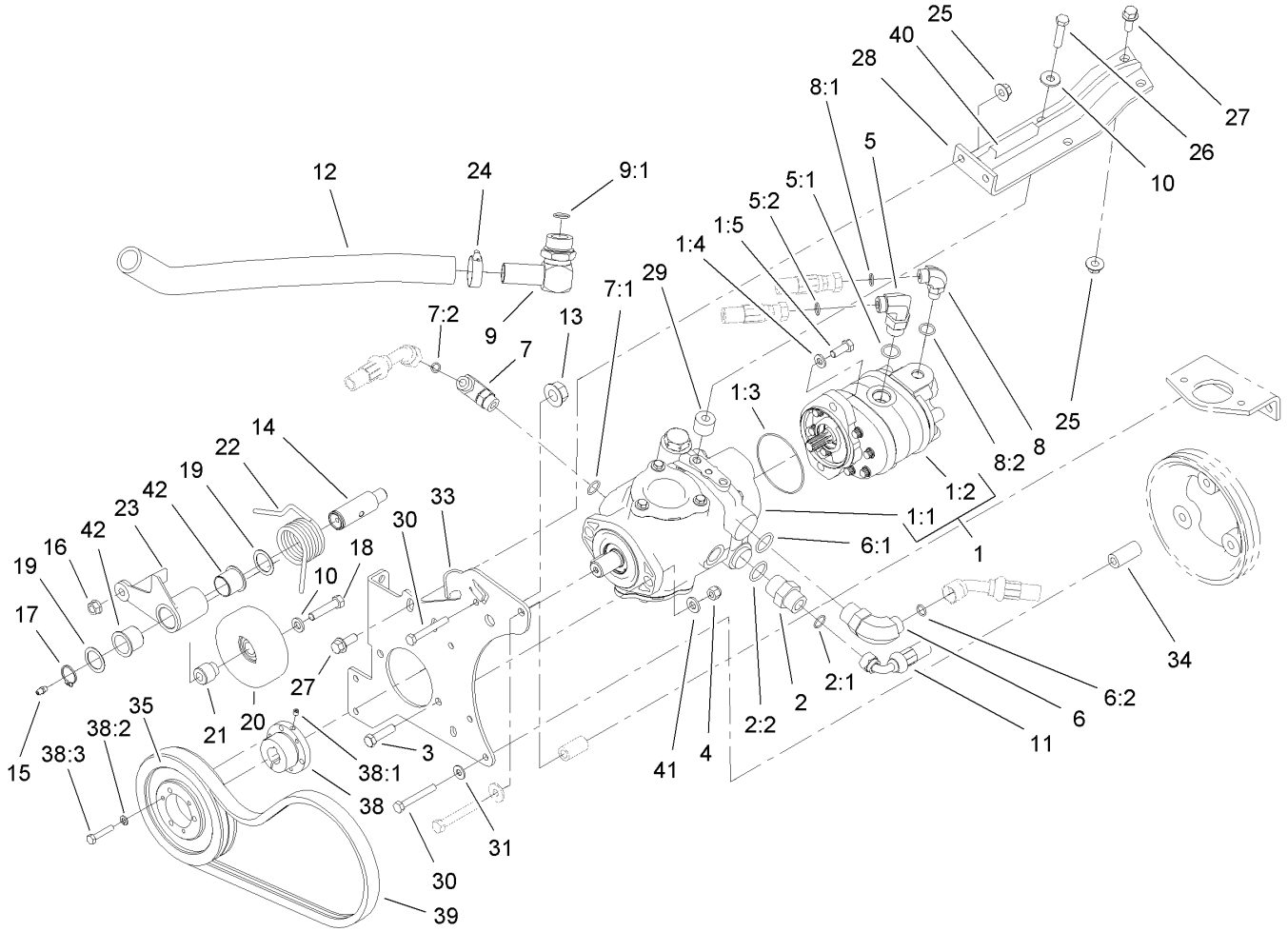

Hydrostat Assembly

Ref.	Part Number	Qty.	Description
1		1	Tandem Pump ASM ●
1:1	104-4890	1	Piston Pump ASM
1:2	95-8601	1	Gear Pump ASM
1:3	60-3520	1	O-Ring
1:4	3256-24	2	Washer-Flat
1:5	3274-1	2	Screw-HSH
2	340-8	1	Fitting-Straight
2:1	237-65	1	O-Ring
2:2	237-81	1	O-Ring
3	323-8	2	Screw-HH
4	3296-39	2	Nut-Lock, NI
5	340-105	1	Fitting-Elbow, 90 DEG
5:1	237-80	1	O-Ring
5:2	237-30	1	O-Ring
6	340-139	1	Fitting-Elbow 90
6:1	237-81	1	O-Ring
6:2	237-65	1	O-Ring
7	340-18	1	Fitting-HYD, 90 DEG
7:1	237-79	1	O-Ring
7:2	237-22	1	O-Ring
8	340-77	1	Fitting-Elbow, 90 DEG
8:1	237-22	1	O-Ring
8:2	237-42	1	O-Ring
9	56-9530	1	Fitting-HYD, 90 DEG
9:1	237-117	1	O-Ring

Ref.	Part Number	Qty.	Description
10	80-6990	3	Washer-Hardened
11	105-1214	1	Hose-HYD
12	104-4845	1	Hose-Suction
13	32128-54	1	Nut-HF
14	99-3529	1	Shaft-Pivot, Idler
15	302-5	1	Fitting-Grease
16	32128-21	1	Nut-HF
17	32151-36	1	Ring-Retaining
18	323-10	1	Screw-HH
19	74-1810	2	Washer
20	95-8802	1	Pulley-Idler
21	95-8806	1	Spacer
22	95-8917	1	Spring-Torsion
23	99-3623-03	1	Arm-Idler
24	2412-34	1	Clamp-Hose
25	32128-43	4	Nut-Flange
26	323-19	2	Screw-HH
27	3234-11	4	Screw-HHF
28	99-3436-03	1	Support-Pump
29	99-3440	2	Spacer
30	33114-060	4	Screw-HH
31	87-8640	3	Washer-Flat
33	95-8933-03	1	Plate-Mount, Pump
34	95-8941	4	Spacer-Mount, Pump
35	93-6841	1	Pulley

● Not serviced separately

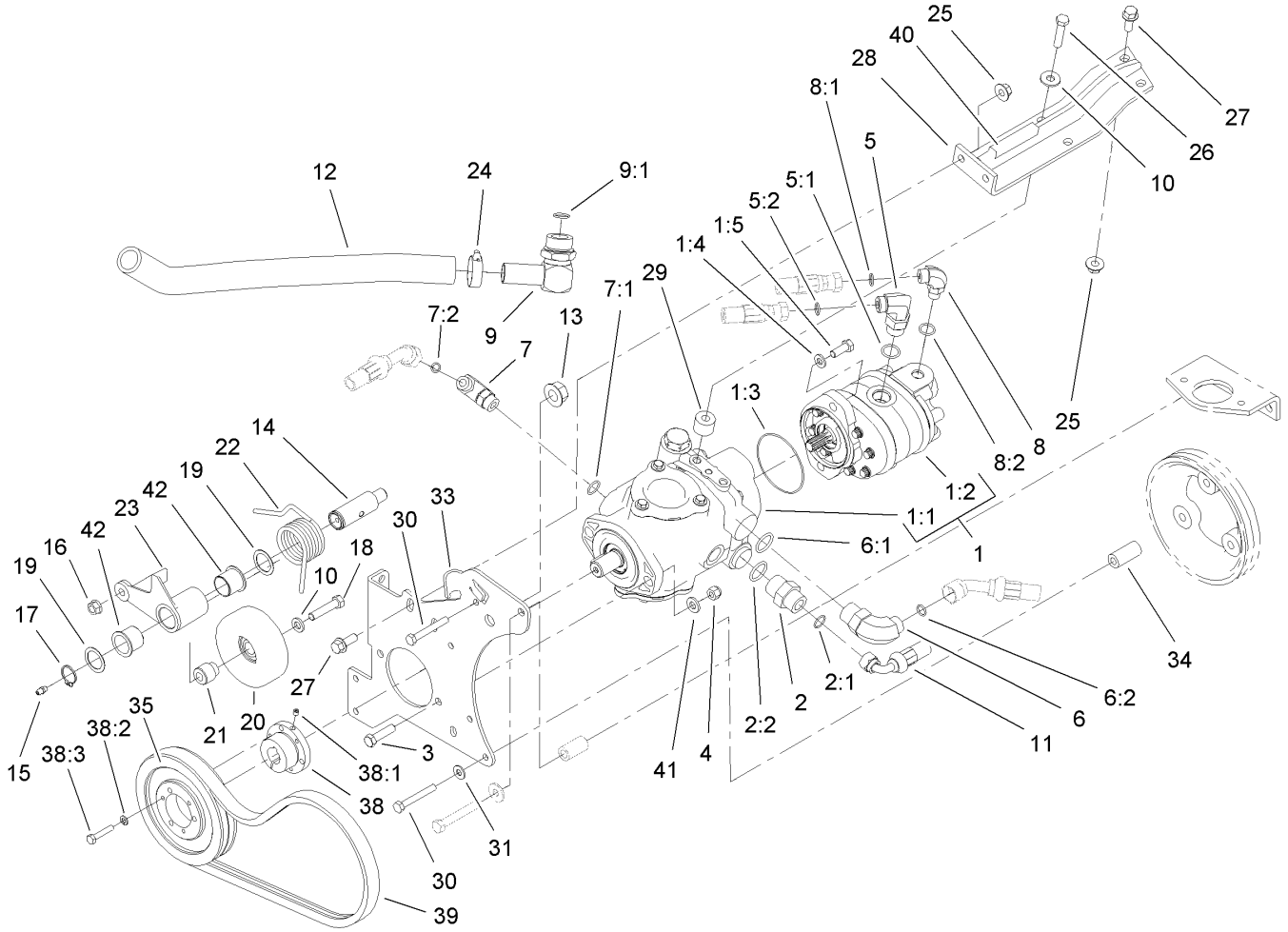

Hydrostat Assembly (continued)

Ref.	Part Number	Qty.	Description
38	93-6842	1	Bushing-Lock, Taper
38:1	3245-36	1	Screw-Set, HSH
38:2	321-13	3	Screw-HH
38:3	3253-2	3	Washer-Lock

Ref.	Part Number	Qty.	Description
39	95-8730	1	V-Belt
40	70-2041	1	Trim
41	100-4852	2	Washer-Hardened
42	99-3631	2	Bushing-Flange

● Not serviced separately

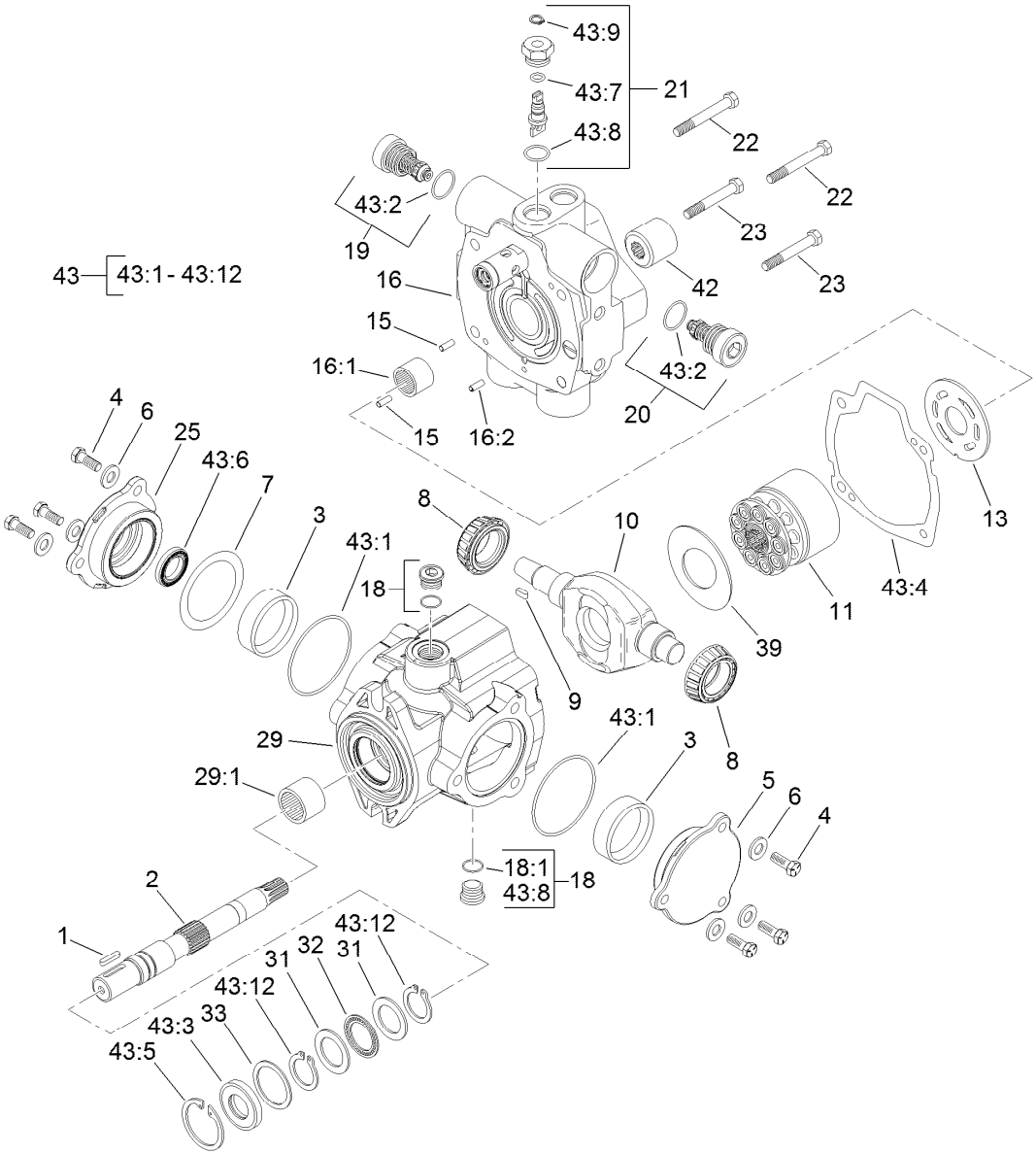

Hydraulic Pump Assembly No. 104-4890

Ref.	Part Number	Qty.	Description
1	94-3645	1	Key
2	94-6359	1	Shaft-Drive
3	104-4046	2	Bearing-Cup
4	98-4640	6	Screw-Cap
5	98-4644	1	Plate-Cover
6	105-9762	6	Washer
7	100-3182	2	Shim Kit
8	98-4639	2	Bearing-Cone
9	94-3646	1	Key
10	104-4888	1	Swashplate
11	76-6070	1	Rotating Kit
13	104-0429	1	Plate-Valve
15	76-6150	2	Pin-Dowel
16	105-3813	1	Endcover Sub ASM
16:1	94-6368	1	Bearing
16:2		1	Pin-Roll ■
18	74-9280	2	Plug ASM
18:1		1	O-Ring ■

Ref.	Part Number	Qty.	Description
19	104-4889	1	Relief Valve ASM
20	105-3812	1	Valve-Check
21	105-3811	1	Valve-Bypass
22	76-6170	2	Capscrew
23	76-6160	2	Capscrew
25	98-4645	1	Plate-Cover
29	100-3176	1	Housing ASM
29:1	94-6363	1	Bearing
31	252-71	2	Washer-Thrust
32	252-66	1	Bearing-Thrust
33	33-3720	1	Washer
39	98-4635	1	Insert-Plate, Cam
42	74-9040	1	Coupler
43	120-5754	1	Seal Kit
43:1		2	O-Ring ■
43:2		2	O-Ring ■
43:3		1	Seal-Shaft ■
43:4		1	Gasket ■

● Not illustrated

■ Not serviced separately

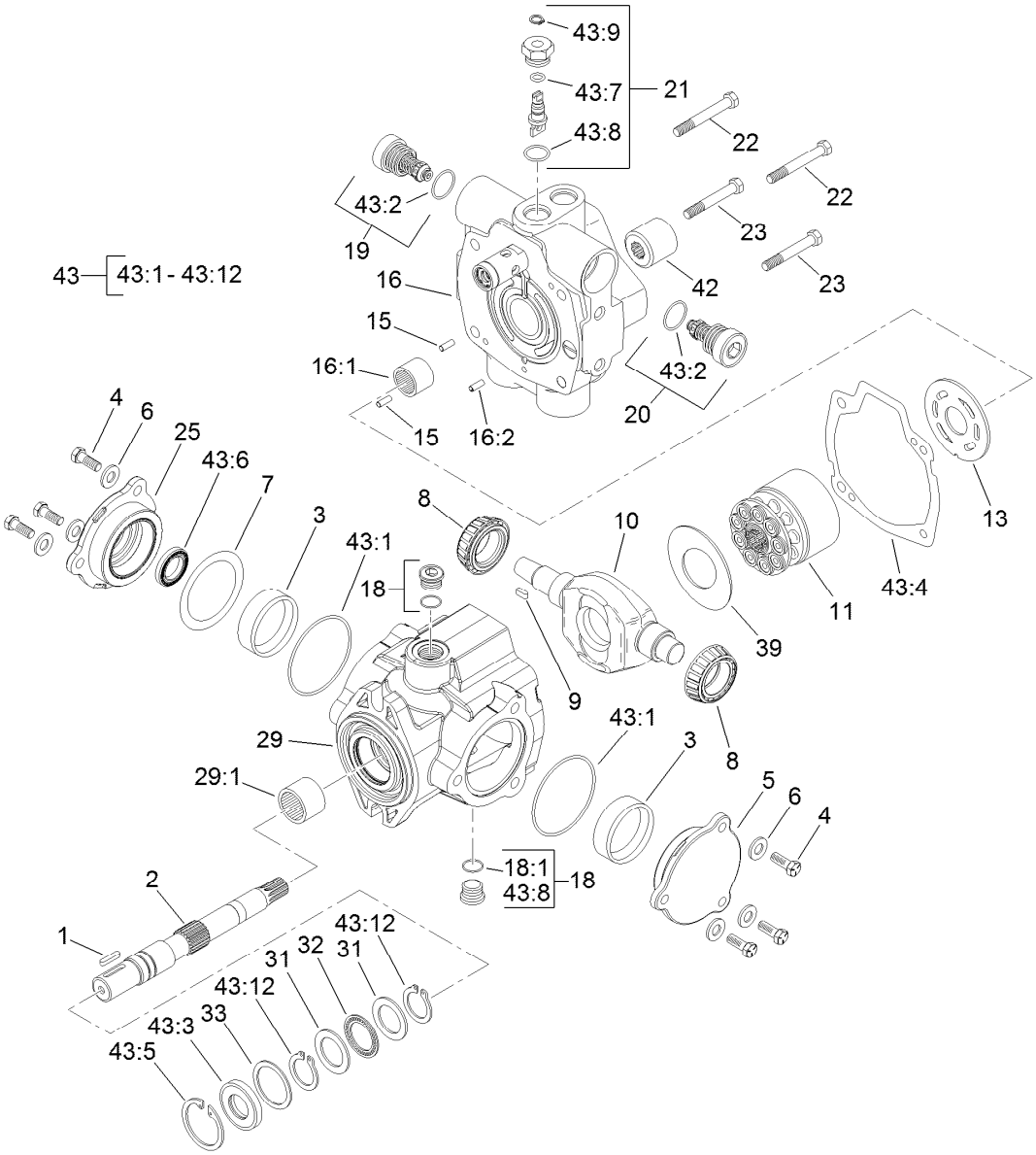

Hydraulic Pump Assembly No. 104-4890 (continued)

Ref.	Part Number	Qty.	Description
43:5		1	Ring-Retaining ■
43:6		1	Seal-Shaft ■
43:7		1	O-Ring ■
43:8		5	O-Ring ■
43:9		1	Ring-Retaining ■

Ref.	Part Number	Qty.	Description
43:10		1	O-Ring ● ■
43:11		1	O Ring-Molded ● ■
43:12		2	Ring-Retaining ■
43:13		1	O-Ring ■

● Not illustrated

■ Not serviced separately

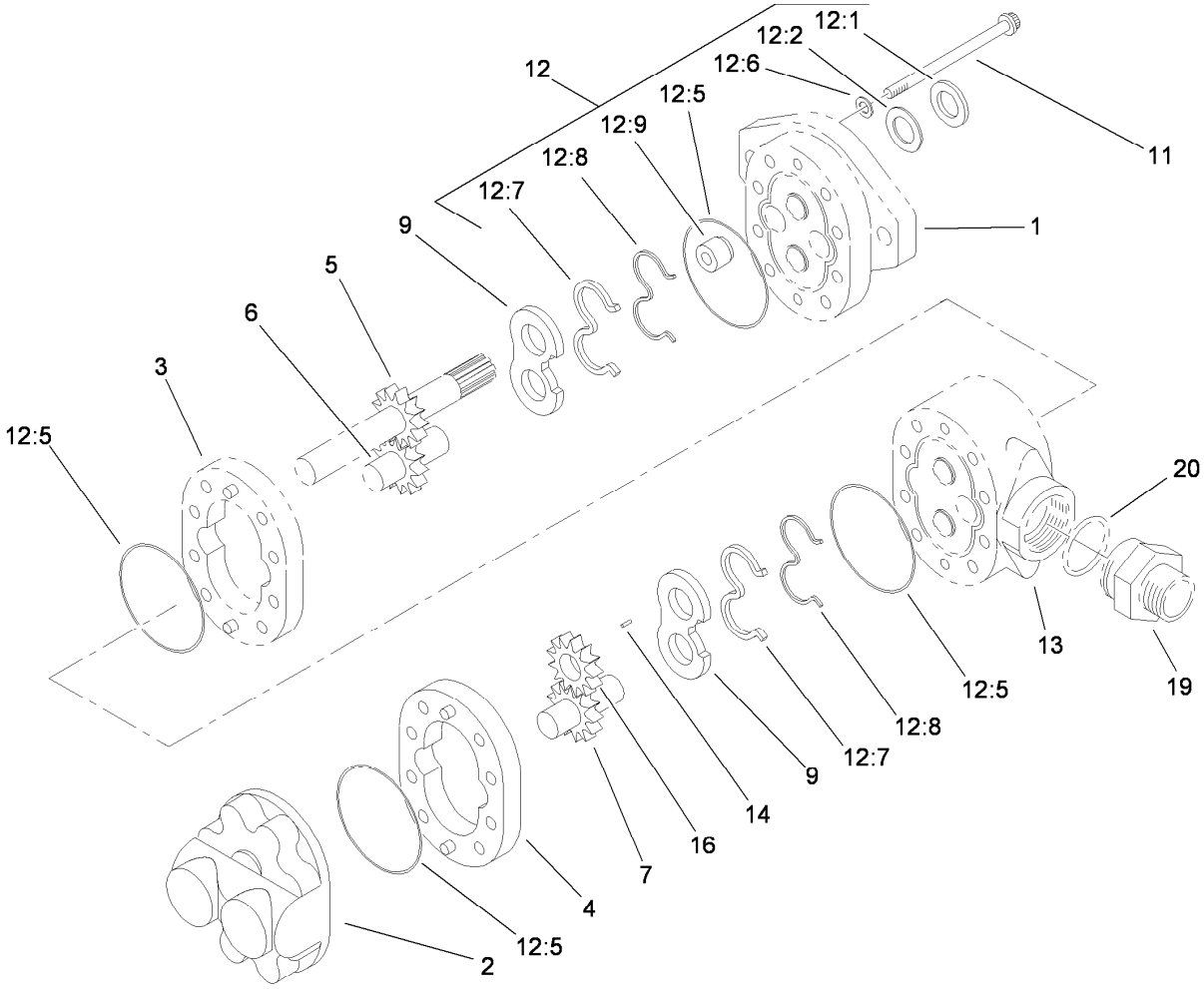

Gear Pump Assembly No. 95-8601

Ref.	Part Number	Qty.	Description
1		1	Plate-Front ■
2		1	Plate-Back ■
3		1	Body ■
4	95-4364	1	Body
5		1	Gear-Drive ■
6		1	Gear-Idler ■
7	95-4366	1	Gear-Idler
9	95-4368	2	Plate-Wear
11	94-8158	8	Screw-Cap
12	94-8161	1	Seal Repair Kit ●
12		4	O-Ring ■
12:1	49-2640	1	Seal-Shaft
12:2	60-5890	1	Washer
12:5		4	O-Ring ■
12:6	94-8160	4	Washer
12:7	95-4369	2	Seal-Pressure
12:8	95-4367	2	Gasket-Backup
12:9	94-3011	1	Plug
13		1	Plate-Adapter ■
14		1	Key ■
16	95-4373	1	Gear-Fit, Slip
19	49-2640	1	Seal-Shaft
20	60-5890	1	Washer

● Not illustrated

■ Not serviced separately

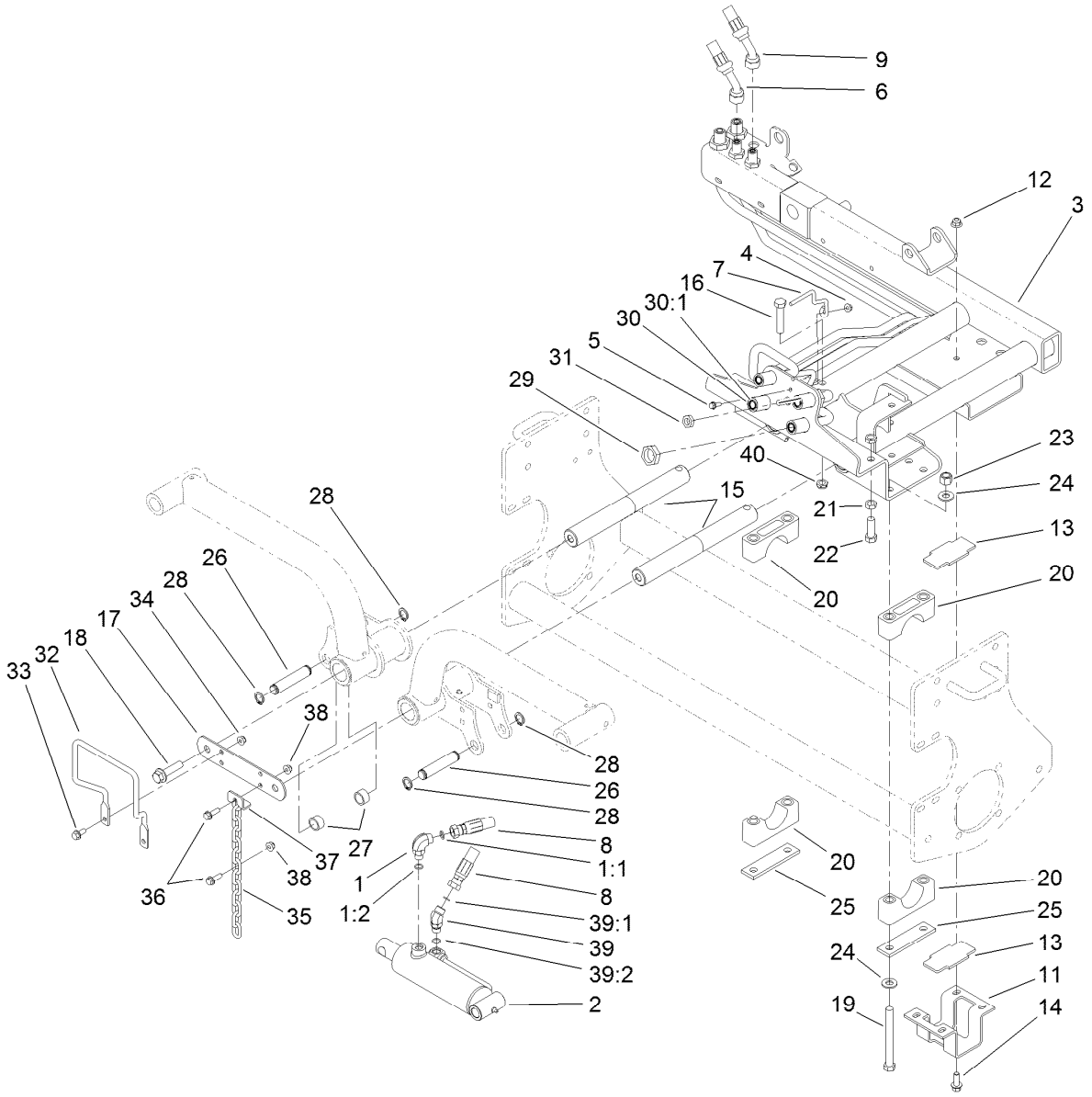

Carrier Assembly

Ref.	Part Number	Qty.	Description
1	340-77	1	Fitting-Elbow, 90 DEG
1:1	237-22	1	O-Ring
1:2	237-42	1	O-Ring
2	117-5109	1	HYD Cylinder ASM
3	100-4930-03	1	Carrier ASM
4	32128-33	1	Nut-HF
5	3234-4	1	Screw-HHF
6	95-8822	1	Hose-HYD
7	99-3433	1	Wire-Center
8	117-5147	2	Hose-HYD
9	95-8821	1	Hose-HYD
11	95-8519-03	1	Bracket-Slide
12	32128-43	4	Nut-Flange
13	95-8538	2	Slide-Plastic
14	3234-11	4	Screw-HHF
15	95-8531	2	Shaft-Pivot, Liftarm
16	325-10	2	Screw-HH
17	95-8532-03	1	Link-Shaft, Pivot
18	3234-27	2	Screw-HHF
19	325-19	8	Screw-HH
20	104-4865	8	Cap-Bearing

Ref.	Part Number	Qty.	Description
21	3218-5	4	Nut-Jam
22	325-7	2	Screw-HH
23	3296-23	8	Nut-Lock, NI
24	87-7270	16	Washer-Thrust
25	99-3373	4	Bar-Support, Slide
26	95-8575	2	Pin-Clevis
27	75-9590	2	Spacer-Cylinder
28	32120-93	4	Ring-Retaining
29	340-74	4	Nut-Lock, Bulkhead
30	99-3640	1	Tube ASM
30:1	237-65	2	O-Ring
31	340-78	1	Nut-Lock
32	99-3492	1	Rod-Formed, Hose Guard
33	3234-5	2	Screw-HHF
34	104-8300	2	Nut-HF, NI
35	98-7981	2	Chain-Link, Straight
36	3234-17	4	Screw-HHF
37	99-3550	2	Clip-Link
38	104-8300	4	Nut-HF, NI
39	340-87	1	Fitting-Elbow, 45 DEG
39:1	237-22	1	O-Ring

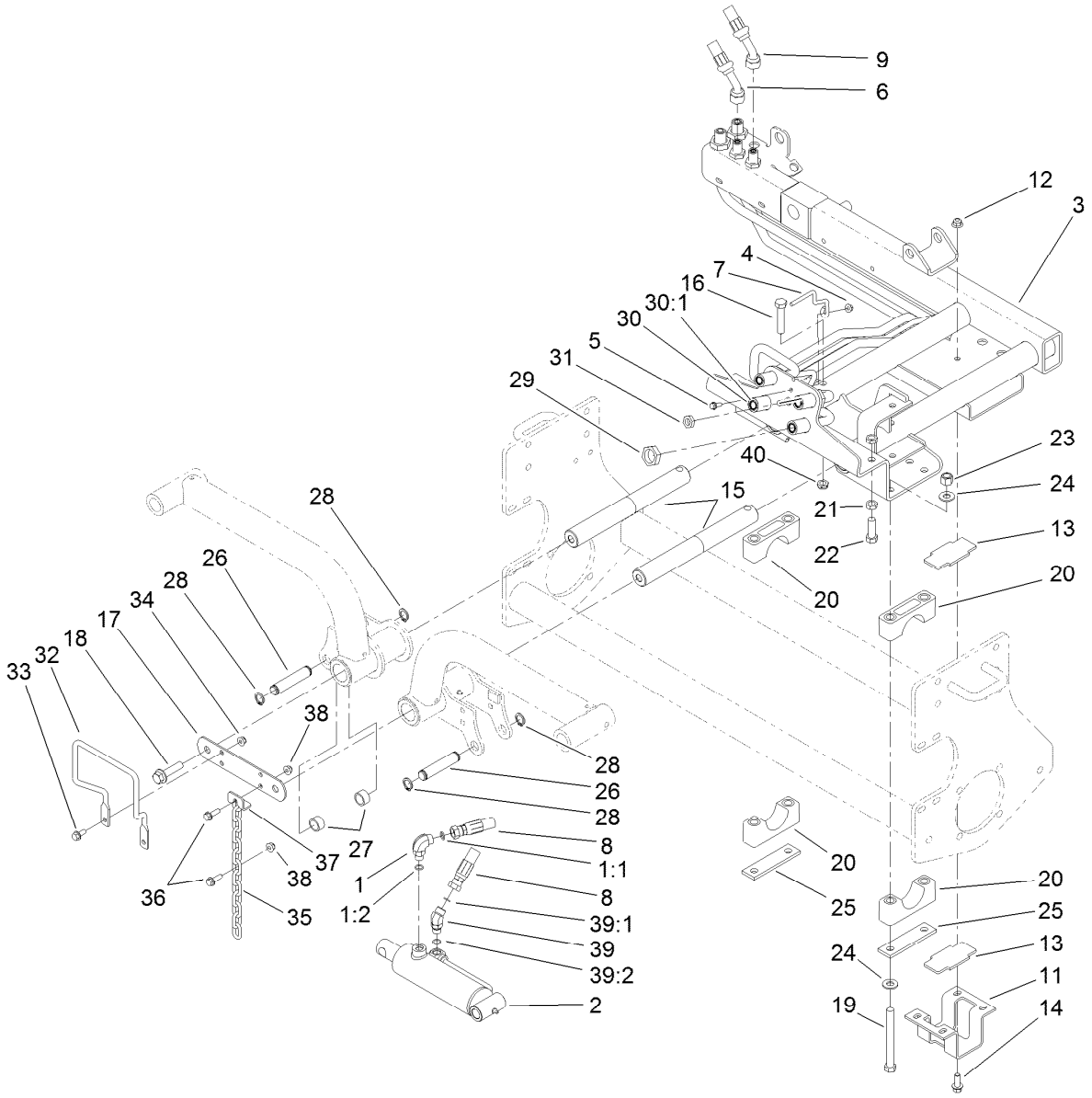

Carrier Assembly (continued)

Ref.	*Part Number*	*Qty.*	*Description*
39:2	237-42	1	O-Ring
40	3296-45	2	Nut-Hex

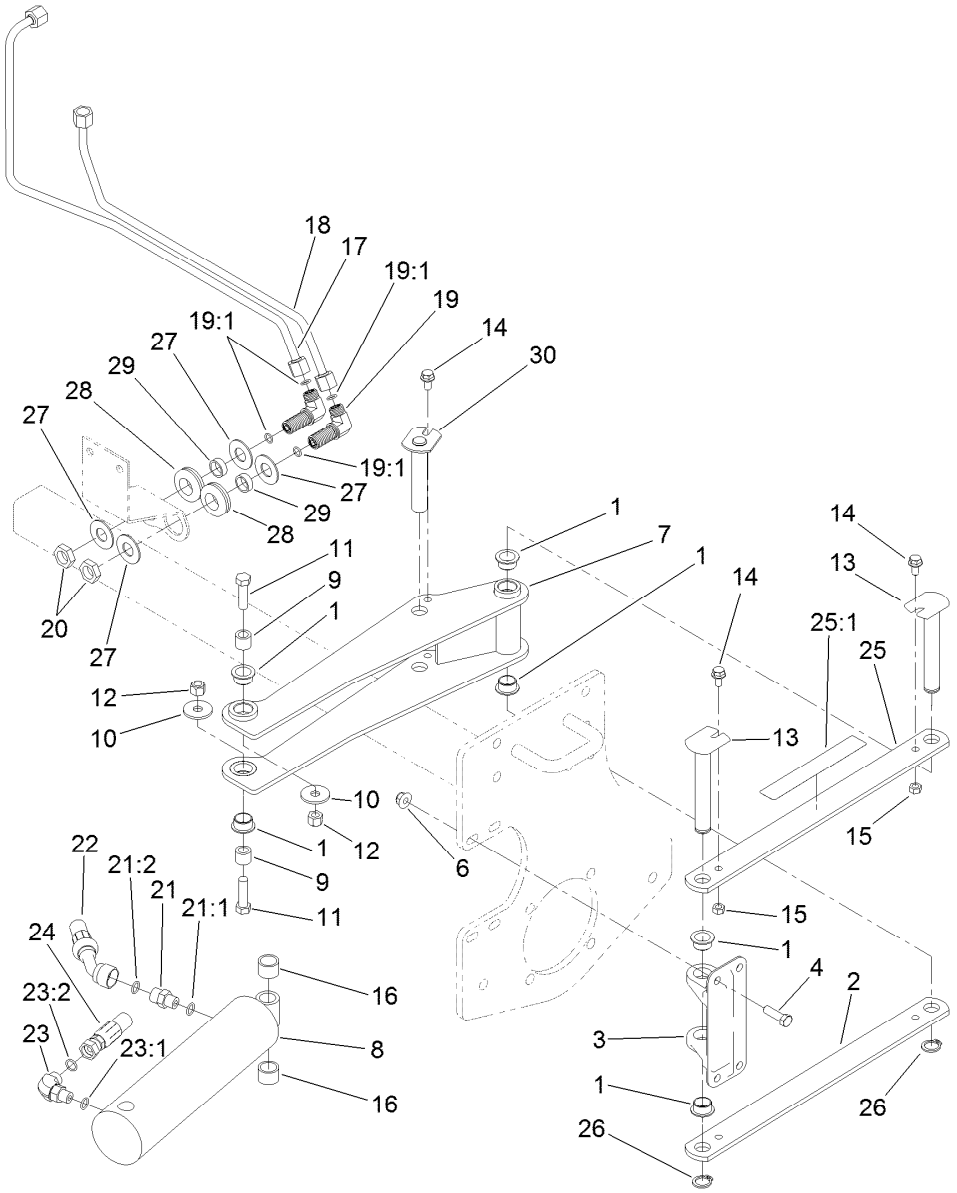

Scissor Assembly

Ref.	Part Number	Qty.	Description
1	95-8526	6	Bushing-Plastic
2	95-8527-03	1	Link-Scissor
3	95-8883	1	Mount-Scissor
4	323-7	4	Screw-HH
6	104-8301	4	Nut-HF, NI
7	95-8521-03	1	Frame-Scissor
8	95-8512	1	Cylinder-HYD
9	95-8603	2	Spacer
10	87-5330	2	Washer
11	324-6	2	Screw-HH
12	3296-48	2	Nut-Hex
13	125-1914	2	Pin-Pivot
14	3234-14	3	Screw-HHF
15	32152-1	3	Nut-Lock, Cone
16	46-6350	2	Spacer
17	95-8790	1	Tube-HYD
18	95-8791	1	Tube-HYD
19	340-154	2	Union-Bulkhead

Ref.	Part Number	Qty.	Description
19:1	237-22	2	O-Ring
20	340-70	2	Nut-Lock
21	85-9720	1	Fitting-STR, Orifice
21:1	237-78	1	O-Ring
21:2	237-21	1	O-Ring
22	95-8838	1	Hose-HYD
23	340-132	1	Fitting-Elbow, 90 DEG
23:1	237-78	1	O-Ring
23:2	237-21	1	O-Ring
24	95-8839	1	Hose-HYD
25	99-3505	1	Scissors Link ASM
25:1	94-3353	1	Decal-Point, Pinch
26	32120-93	2	Ring-Retaining
27	69-8940	4	Washer
28	240-4	2	Grommet-Rubber
29	69-8970	2	Spacer
30	120-3199	1	Pin-Pivot

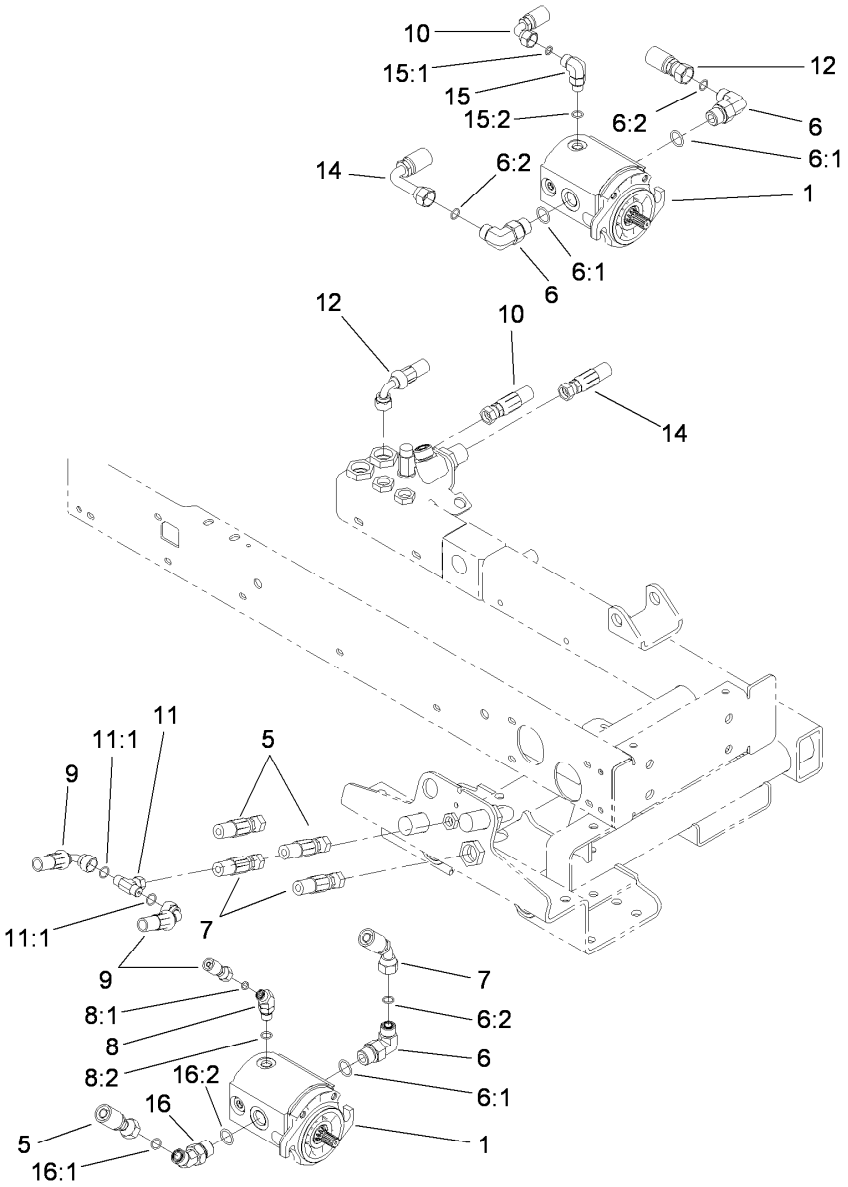

Reel Motor Assembly

Ref.	Part Number	Qty.	Description
1	115-8250	3	Gear Motor ASM
5	117-5142	2	Hose-HYD
6	340-105	4	Fitting-Elbow, 90 DEG
6:1	237-80	1	O-Ring
6:2	237-30	1	O-Ring
7	117-5143	2	Hose-HYD
8	340-137	2	Fitting
8:1	237-21	1	O-Ring
8:2	237-42	1	O-Ring
9	117-5144	2	Hose-HYD
10	114-5500	1	Hose-HYD

Ref.	Part Number	Qty.	Description
11	99-3477	1	Fitting-Tee
11:1	237-42	2	O-Ring
12	117-5146	1	Hose-HYD
14	117-5145	1	Hose-HYD
15	340-77	1	Fitting-Elbow, 90 DEG
15:1	237-22	1	O-Ring
15:2	237-42	1	O-Ring
16	340-89	2	Fitting-HYD, 45 DEG
16:1	237-30	1	O-Ring
16:2	237-80	1	O-Ring

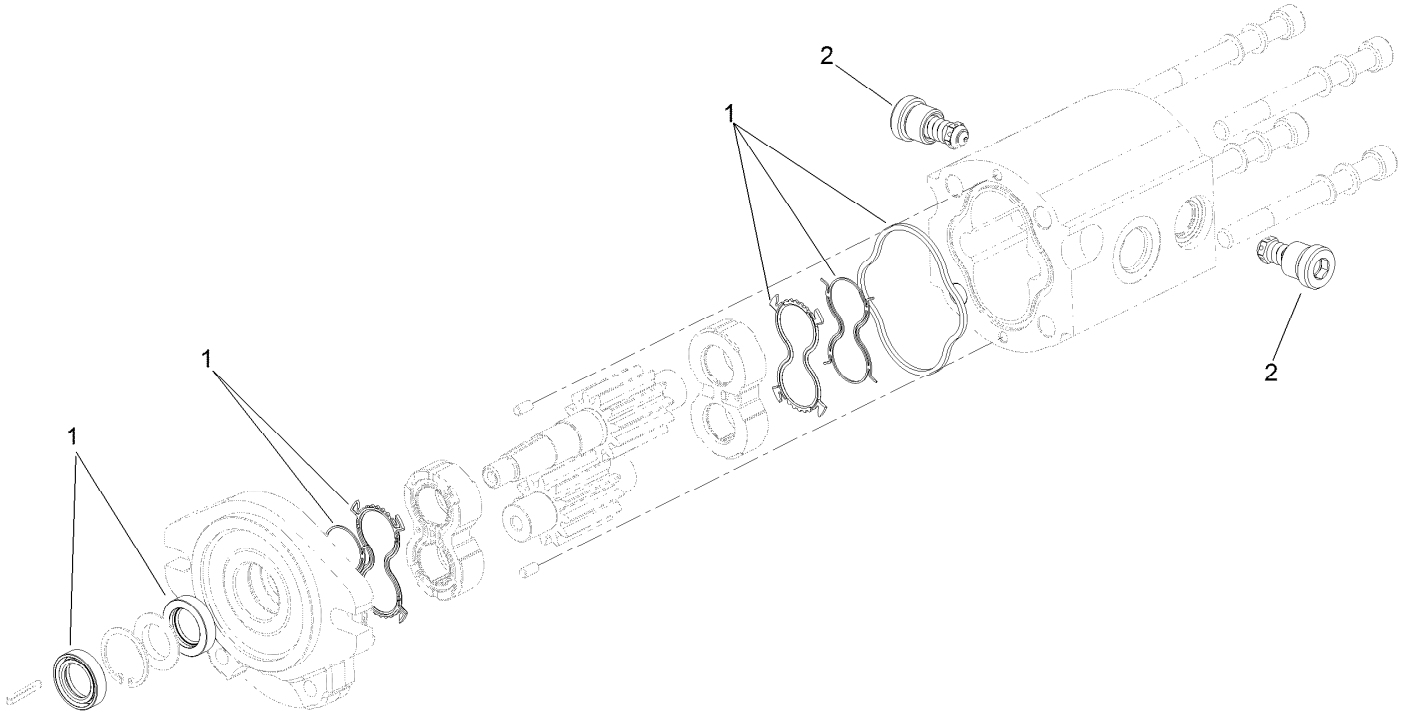

Gear Motor Assembly No. 115-8250

Ref.	*Part Number*	*Qty.*	*Description*
1	125-1682	1	Motor Seal Kit
2	117-5107	2	Valve-Check

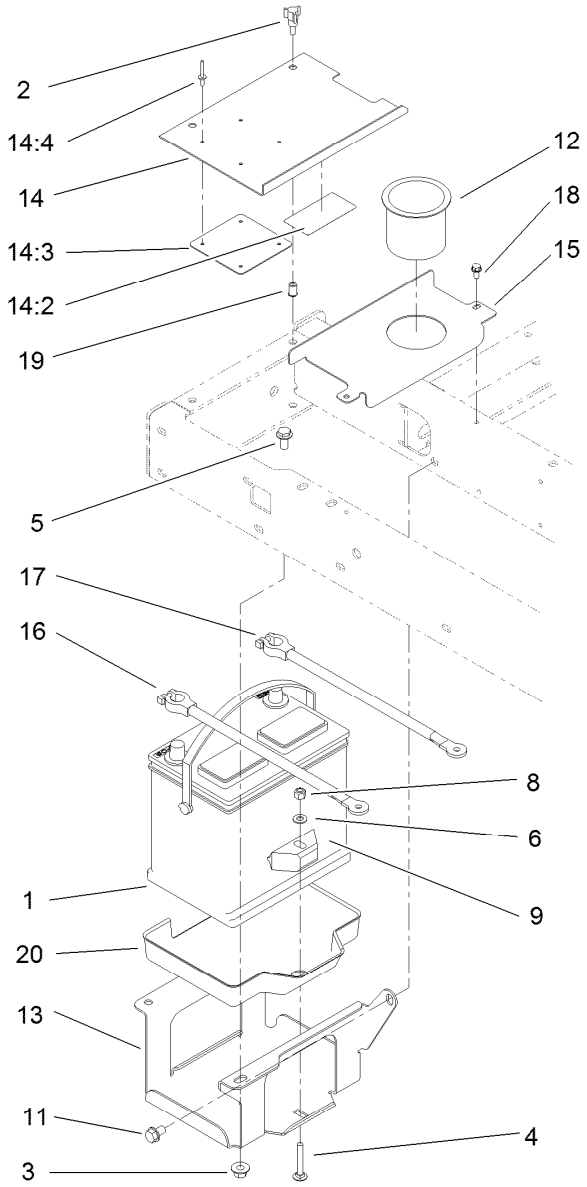

Battery Assembly

Ref.	Part Number	Qty.	Description
1	104-9979	1	Battery
2	233-70	2	Knob-Star, Three
3	32128-43	3	Nut-Flange
4	3230-6	1	Bolt-CARR
5	3234-1	3	Screw-HHF
6	3256-23	1	Washer-Plain
8	3296-29	1	Nut-Lock, NI
9	66-2490	1	Retainer-Battery
11	32144-15	1	Screw-HHFTF
12	94-1410	1	Holder-Can, Beverage
13	95-8796-03	1	Support-Battery

Ref.	Part Number	Qty.	Description
14		1	Battery Cover ASM ●
14:2	93-7276	1	Decal-Danger
14:3	87-7620	1	Shield-Terminal, Battery
14:4	3269-27	4	Rivet-Snap
15	95-8817-01	1	Cover-Battery, Inner
16	95-8853	1	Cable-Battery, Positive
17	95-8854	1	Cable-Battery, Negative
18	32144-4	2	Screw-HWH
19	32148-6	2	Nut-Clinch
20	99-3513	1	Tray-Battery

● Not serviced separately

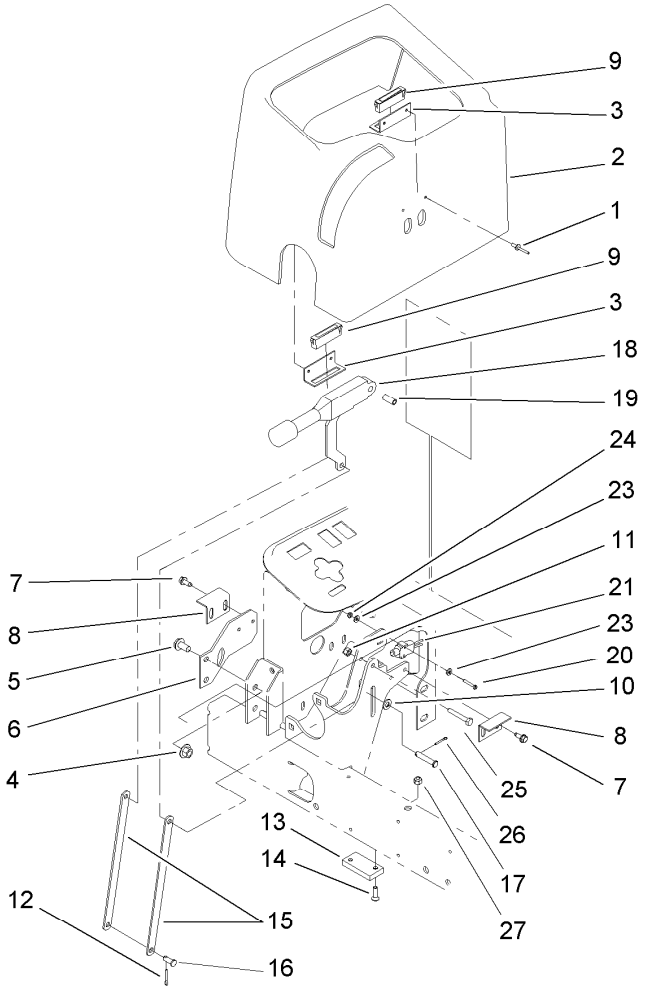

Parking Brake Assembly

Ref.	Part Number	Qty.	Description
1	3269-5	4	Rivet-Pop
2	95-8707	1	Cover-Dash
3	95-8763	2	Bracket-Hold Down, Cover
4	32128-43	2	Nut-Flange
5	3234-1	2	Screw-HHF
6	95-8764-03	1	Support-Magnet
7	32144-10	4	Screw-HWH
8	95-8765	2	Bracket-Strike, Magnet
9	58-4250	2	Catch-Magnetic
10	3256-23	3	Washer-Plain
11	3296-42	1	Nut-Lock, NI
12	3272-10	1	Pin-Cotter
13	95-8684	1	Pad-Bumper

Ref.	Part Number	Qty.	Description
14	3289-4	2	Screw-FH
15	104-4628-03	2	Link-Brake, Parking
16	283-62	1	Pin-Clevis
17	94-3829	1	Pin-Clevis
18	104-4817	1	Lever-Brake
19	87-4710	1	Spacer-Brake, Parking
20	32105-9	2	Screw
21	95-8900	1	Switch
23	3256-21	4	Washer-Flat
24	3296-9	2	Nut-Hex
25	321-10	1	Screw-HH
26	3272-6	1	Pin-Cotter
27	32128-32	2	Nut-HHF

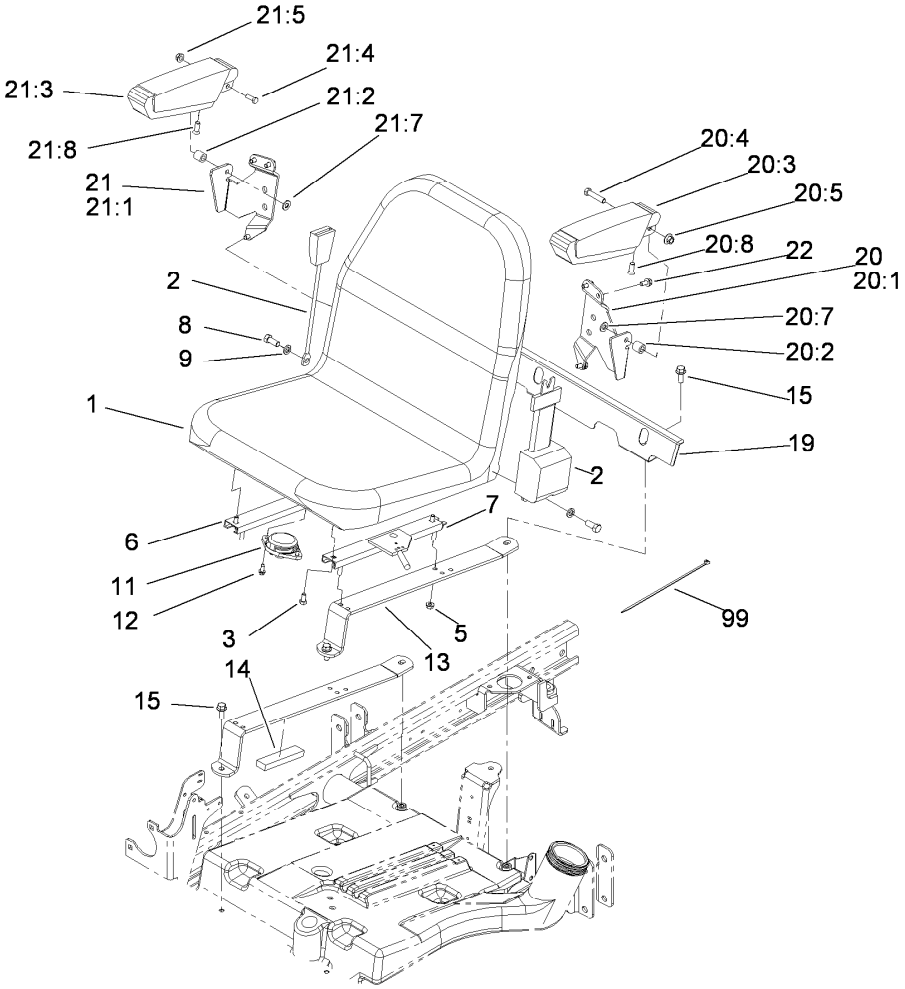

Seat Assembly

Ref.	Part Number	Qty.	Description
1	104-4620	1	Seat
2	100-4928	1	Belt-Seat
3	3234-14	4	Screw-HHF
5	104-8300	4	Nut-HF, NI
6	92-8990	1	Adjuster-Slave
7	92-8991	1	Adjuster (W/Latch)
8	3212-4	2	Screw-HH
9	3253-6	2	Washer-Lock
11	92-6282	1	Switch-Seat
12	32144-10	2	Screw-HWH
13	104-4847-03	2	Strap-Support, Seat
14	95-8896	2	Foam
15	3234-11	4	Screw-HHF
19	104-4833-03	1	Shield-Heat
20	92-7307	1	LH Armrest ASM
20:1	69-0760	1	Bracket-Arm, LH

Ref.	Part Number	Qty.	Description
20:2	92-7301	1	Spacer
20:3	69-1180	1	Armrest
20:4	323-9	1	Screw-HH
20:5	32128-19	1	Nut-HF
20:7	3256-24	1	Washer-Flat
20:8	92-7318	1	Screw
21	92-7306	1	RH Armrest ASM
21:1	69-0770	1	Bracket-Arm, RH
21:2	92-7301	1	Spacer
21:3	69-1180	1	Armrest
21:4	323-9	1	Screw-HH
21:5	32128-19	1	Nut-HF
21:7	3256-24	1	Washer-Flat
21:8	92-7318	1	Screw
22	3234-14	6	Screw-HHF
99	3290-378	1	Tie-Cable

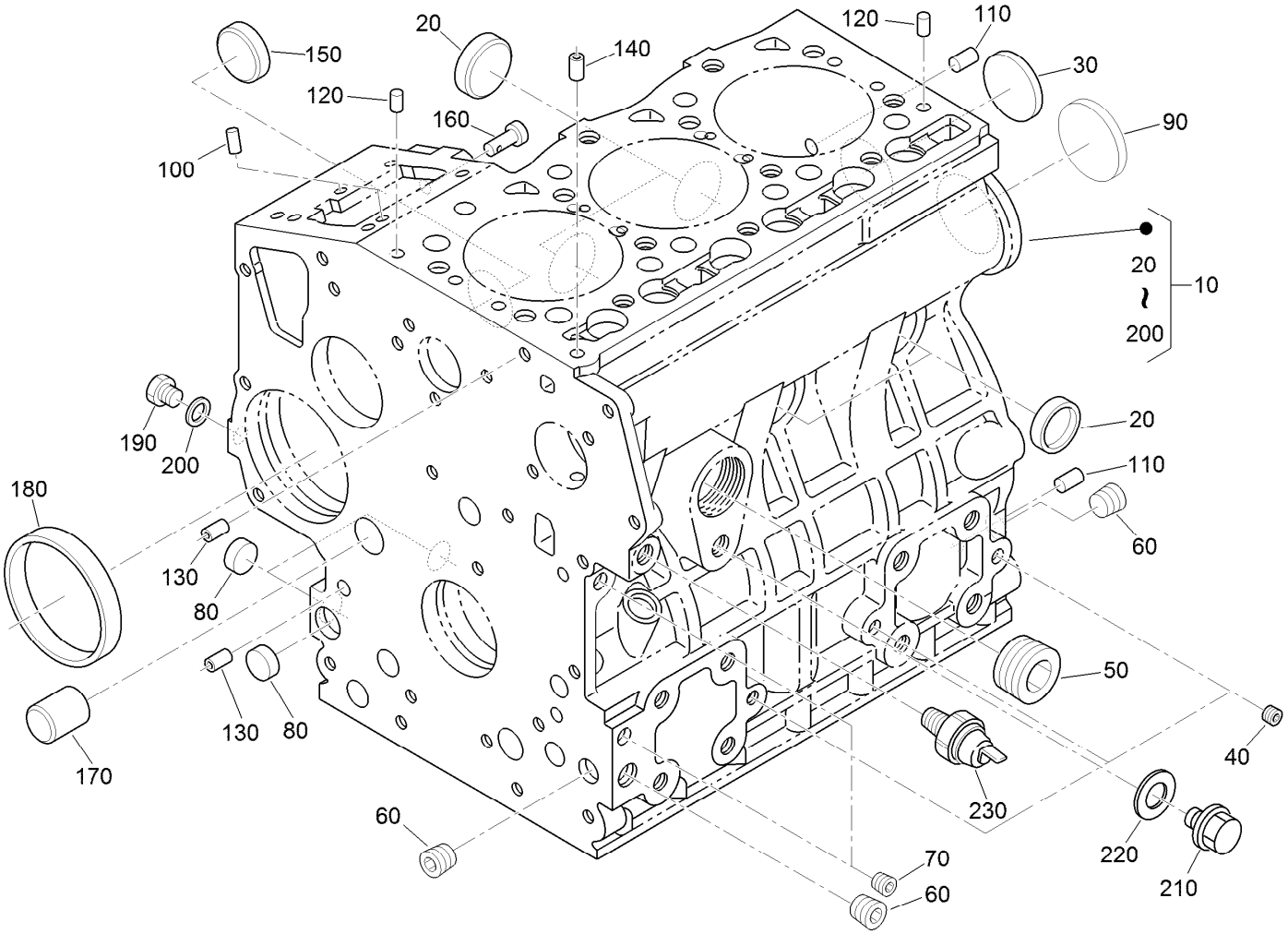

Crankcase Assembly

Ref.	Part Number	Qty.	Description
10	115-3443	1	Crankcase ASM
20	98-9398	4	Cap-Sealing
30	98-7539	1	Cap-Sealing
40	98-9687	3	Plug
50	105-3779	1	Plug
60	98-9597	3	Plug
70	98-7487	2	Plug
80	98-9379	3	Plug-Expansion
90	98-9668	1	Plug-Expansion
100	98-9375	2	Pin-Straight
110	98-9377	2	Pin-Straight
120	98-9376	2	Pin-Straight

Ref.	Part Number	Qty.	Description
130	98-9387	2	Pin-Pipe
140	98-9539	1	Pin-Pipe
150	98-9599	1	Plug
160	98-9630	1	Pin-Spring, Start
170	98-9675	1	Plug
180	98-9656	1	Bushing-Governor, Gear
190	120-2559	1	Plug
200	98-7428	1	Gasket
210	99-3447	1	Plug
220	106-7056	1	Gasket
230	98-9416	1	Switch-Oil

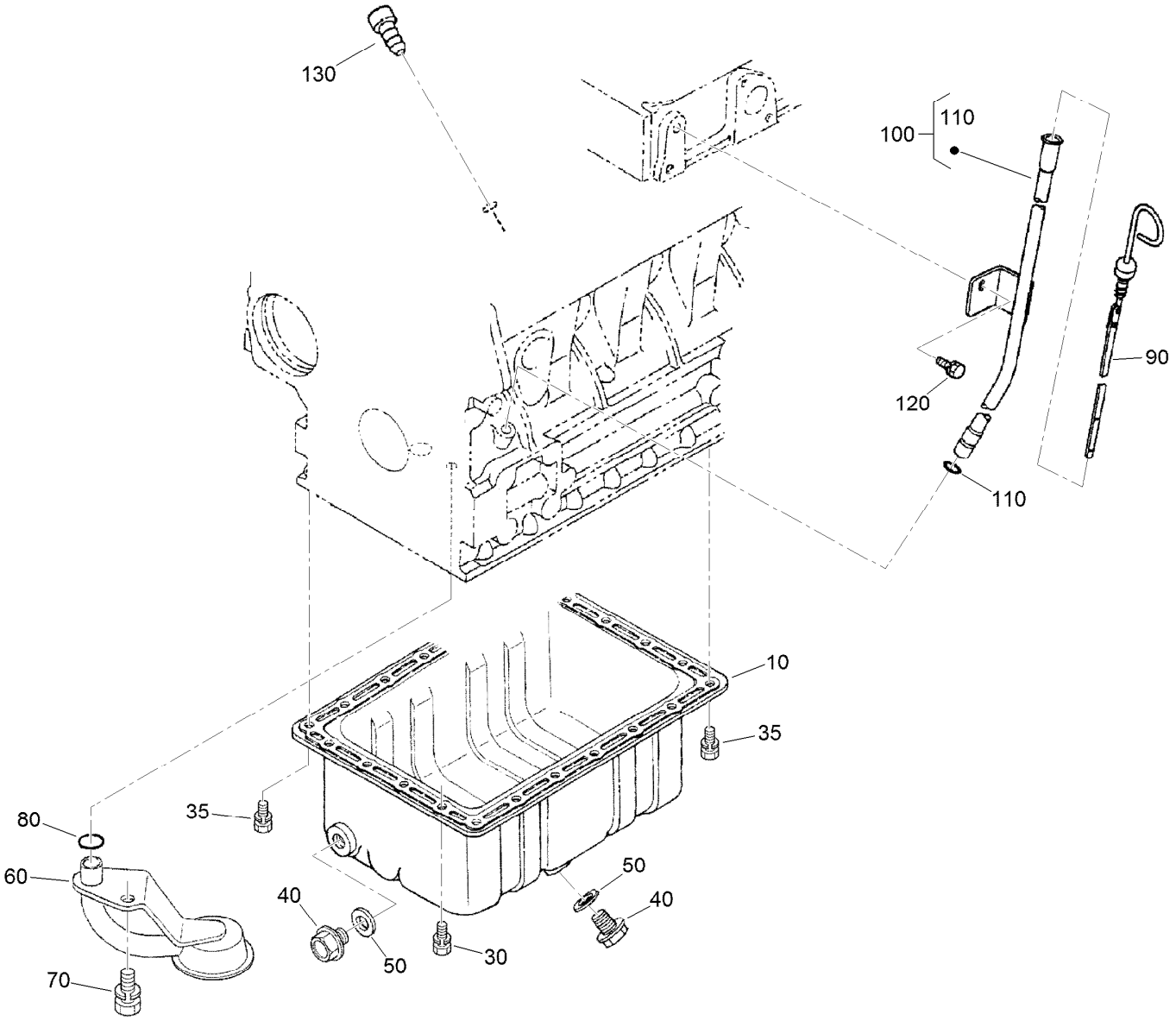

Oil Pan and Dipstick Assembly

Ref.	*Part Number*	*Qty.*	*Description*
10	98-9685	1	Pan-Oil
30	98-9351	20	Bolt
35	98-9351	2	Bolt
40	114-8151	1	Plug-Drain
50	98-7524	1	Gasket
60	108-1401	1	Base-Filter
70	98-7526	1	Bolt
80	105-3776	1	O-Ring
90	98-9670	1	Gauge-Oil
100	98-9672	1	Oil Gauge Guide ASM
110	98-9722	1	O-Ring
120	100-9195	1	Bolt
130	110-3720	1	Plug-Gauge, Oil

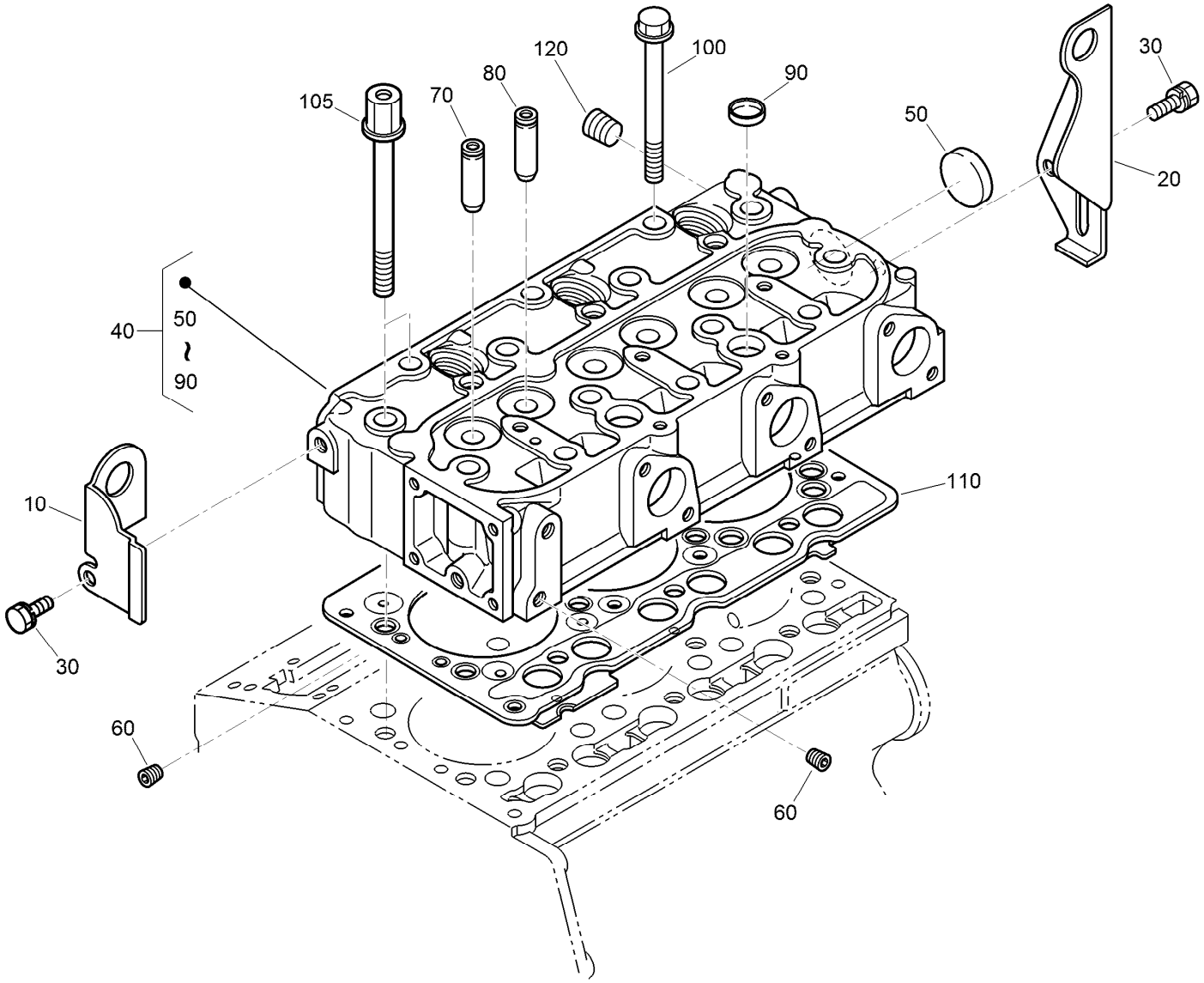

Cylinder Head Assembly

Ref.	Part Number	Qty.	Description
10	130-1231	1	Hook-Engine
20	98-9478	1	Hook-Engine
30	100-9195	2	Bolt
40	138-6997	1	Cylinder Head ASM
50	105-3705	1	Cap-Sealing
60	98-9687	2	Plug
70	107-9066	3	Guide-Valve, Inlet
80	107-9067	3	Guide-Valve, Exhaust
90	98-9389	2	Cap-Sealing
100	98-9479	12	Bolt-Head, Cylinder
105	98-9647	2	Bolt-Head, Cylinder
110	108-6573	1	Gasket-Head, Cylinder
120	98-9444	1	Plug

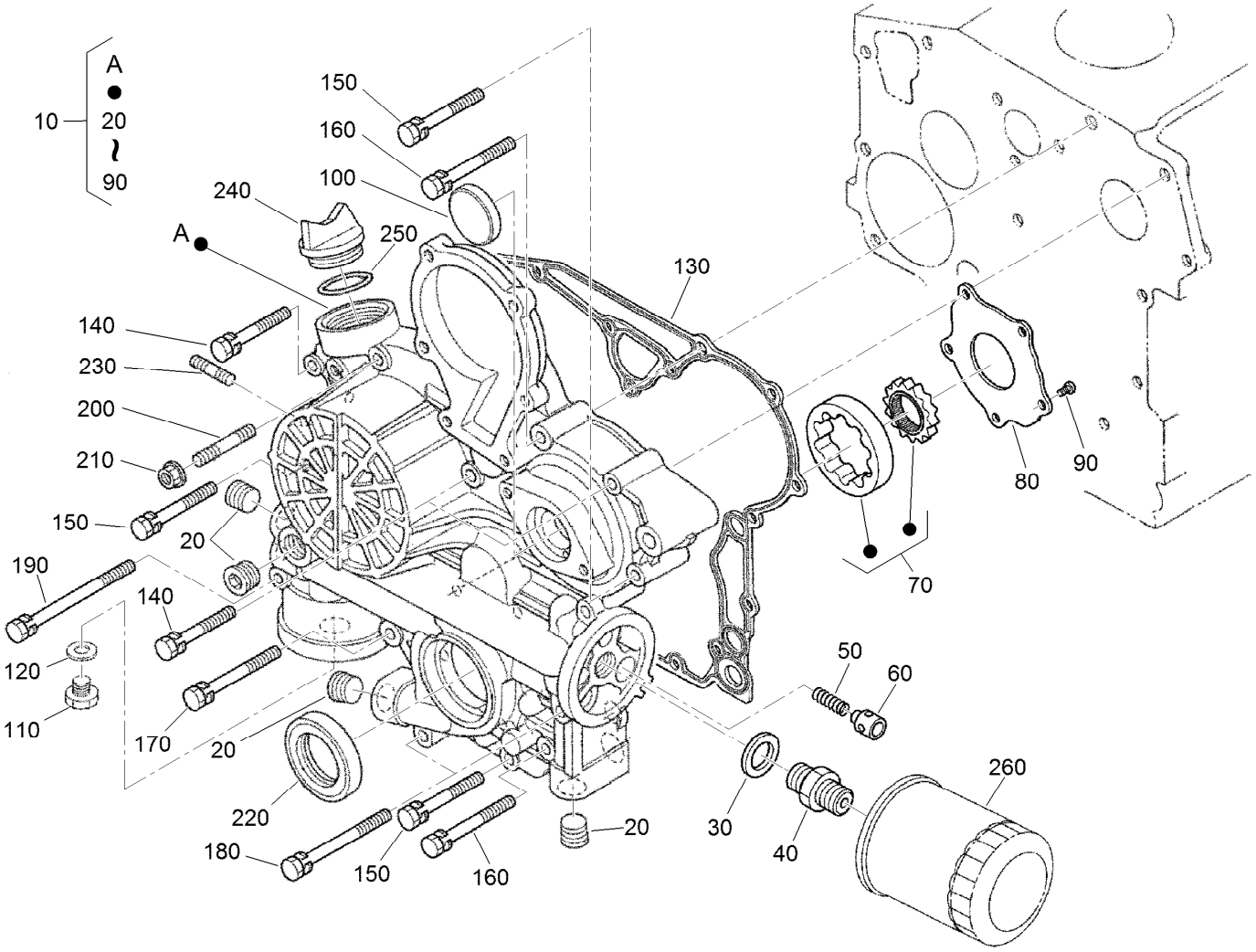

Gear Case and Oil Filter Cartridge Assembly

Ref.	Part Number	Qty.	Description
10	130-1500	1	Gear Case ASM
20	98-9598	5	Plug
30	98-7562	1	Washer-Plain
40	98-9388	1	Joint-Pipe
50	130-1511	1	Spring
60	130-1510	1	Valve-Relief
70	130-1508	1	Rotor ASM
80	130-1509	1	Cover-Pump, Oil
90	130-1164	5	Screw-Binding
100	98-9641	1	Cover-Case, Gear
110	99-3450	1	Plug
120	99-3451	1	Plug-Packing
130	98-9633	1	Gasket-Case, Gear

Ref.	Part Number	Qty.	Description
140	100-1765	3	Bolt
150	125-9063	4	Bolt-Sems
160	98-9356	2	Bolt
170	98-9437	1	Bolt
180	98-9586	2	Bolt
190	99-3511	1	Bolt
200	105-3709	1	Stud
210	100-2203	1	Nut-Flange
220	119-8038	1	Seal-Oil
230	105-3710	2	Stud
240	107-9075	1	Plug-Filler, Oil
250	99-3446	1	O-Ring
260	127-0511	1	Filter-Oil

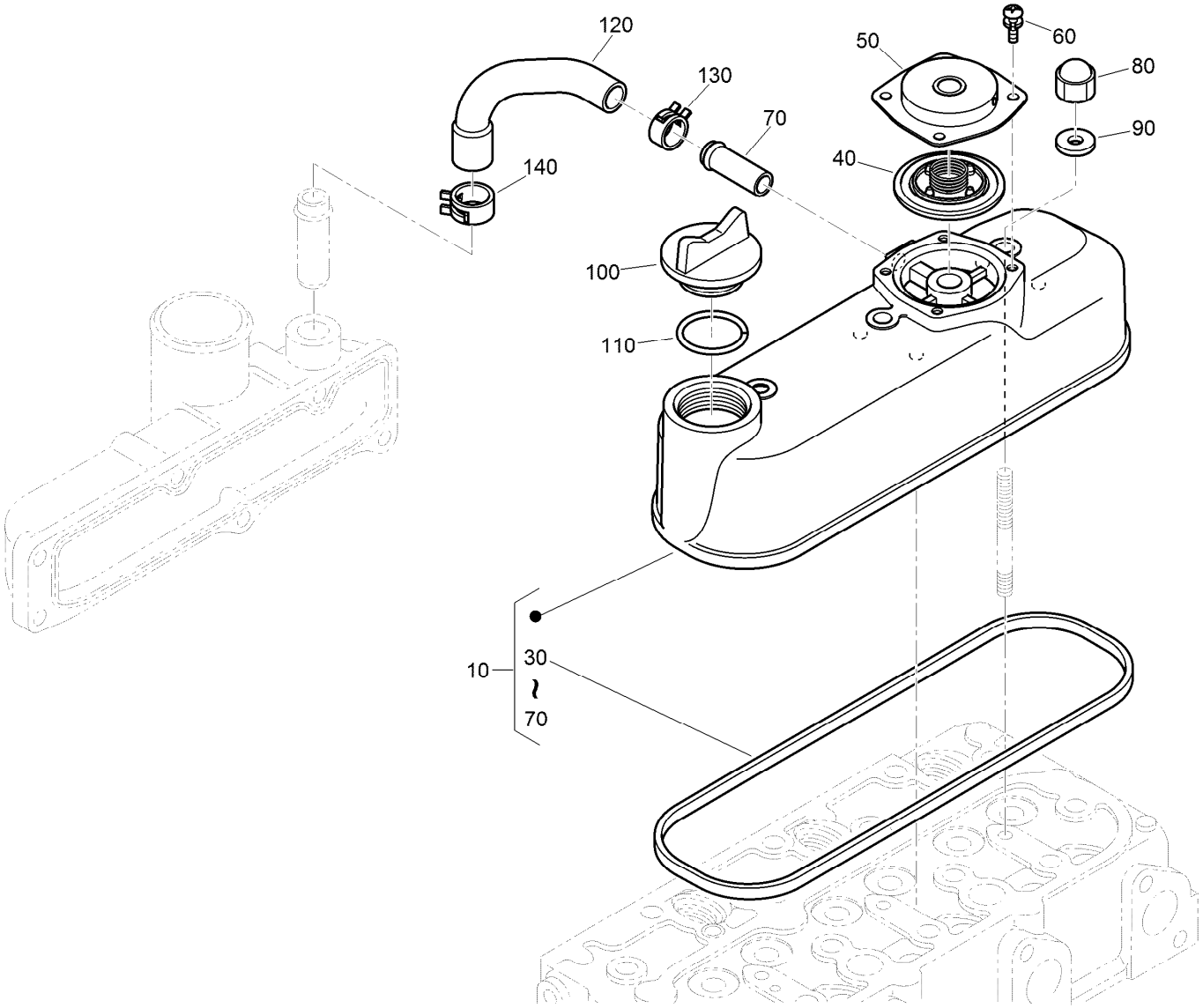

Cylinder Head Cover Assembly

Ref.	*Part Number*	*Qty.*	*Description*
10	130-1372	1	Cylinder Head Cover ASM
30	130-1249	1	Gasket-Head Cover
40	110-3715	1	Valve-Breather
50	110-3714	1	Cover-Breather
60	98-9364	4	Screw (With Washer)
70	98-7766	1	Pipe-Return, Water
80	98-9455	3	Nut-Cap
90	98-9454	3	Gasket
100	107-9075	1	Plug-Filler, Oil
110	99-3446	1	O-Ring
120	107-7836	1	Tube-Breather
130	108-2859	1	Clamp-Hose
140	108-2860	1	Clamp-Hose

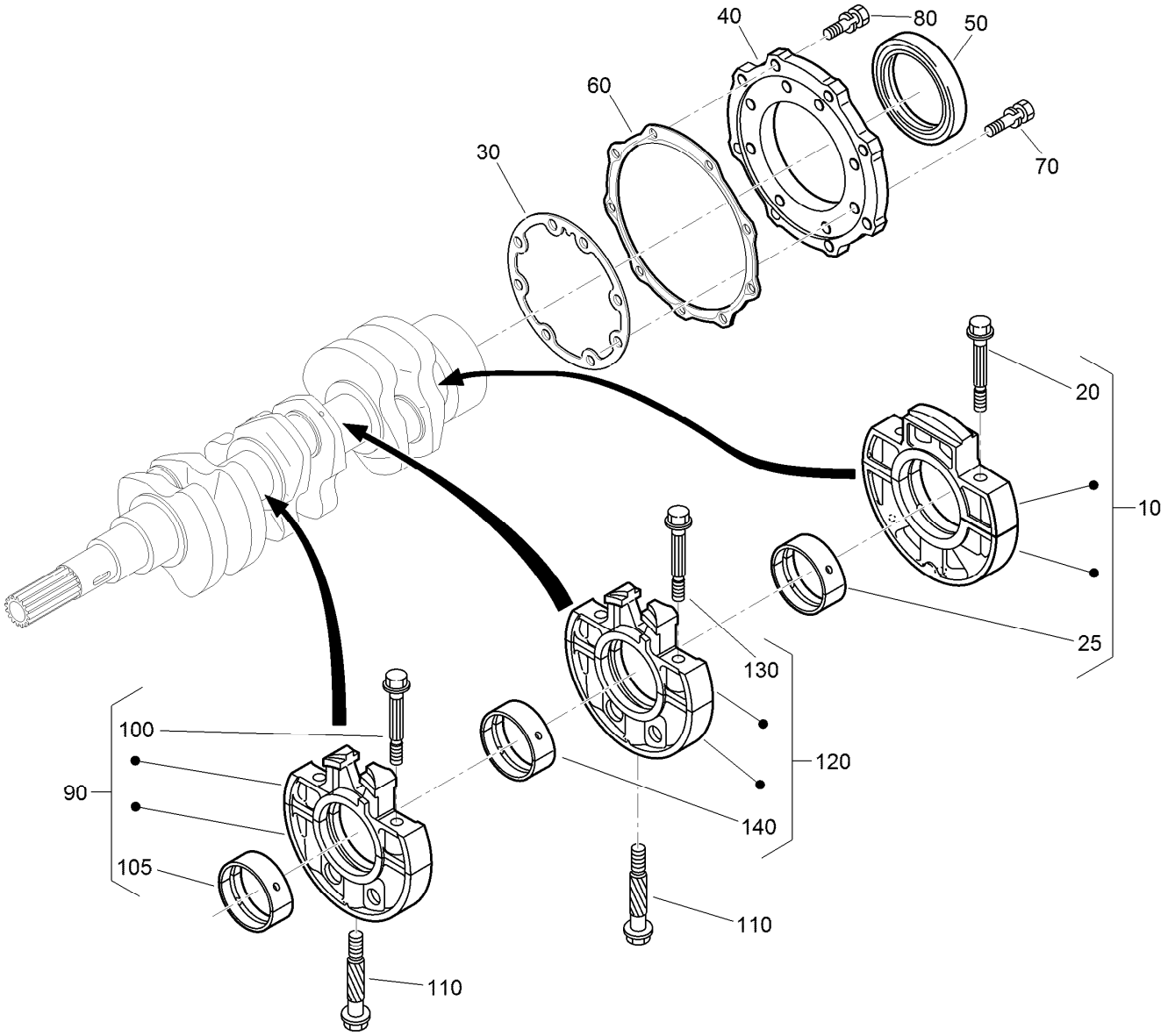

Main Bearing Case Assembly

Ref.	Part Number	Qty.	Description
10	112-7026	1	Wheel Bearing Case ASM
20	98-9484	2	Bolt-Case, Bearing
25	115-4121	1	Metal-Crankshaft (STD)
25	112-7039	1	Metal-Crankshaft (0.2Mm)
25	112-7040	1	Metal-Crankshaft (-0.4Mm)
30	127-0440	1	Gasket-Case, Bearing
40	112-7046	1	Cover-Case, Bearing
50	112-0180	1	Seal-Oil
60	112-7037	1	Gasket-Cover, Case
70	127-0441	8	Bolt
80	127-0442	9	Bolt

Ref.	Part Number	Qty.	Description
90	115-4106	1	Main Bearing Case ASM
100	98-9484	2	Bolt-Case, Bearing
105	98-9524	1	Metal-Crankshaft (STD Set)
105	127-0433	1	Metal-Crankshaft (-0.2Mm)
105	98-9531	1	Bearing-Main (0.4Mm)
110	98-9485	2	Bolt-Case, Bearing
120	115-4107	1	Main Bearing Case ASM
130	98-9484	2	Bolt-Case, Bearing
140	98-9524	1	Metal-Crankshaft (STD Set)
140	127-0433	1	Metal-Crankshaft (-0.2Mm)
140	98-9531	1	Bearing-Main (0.4Mm)

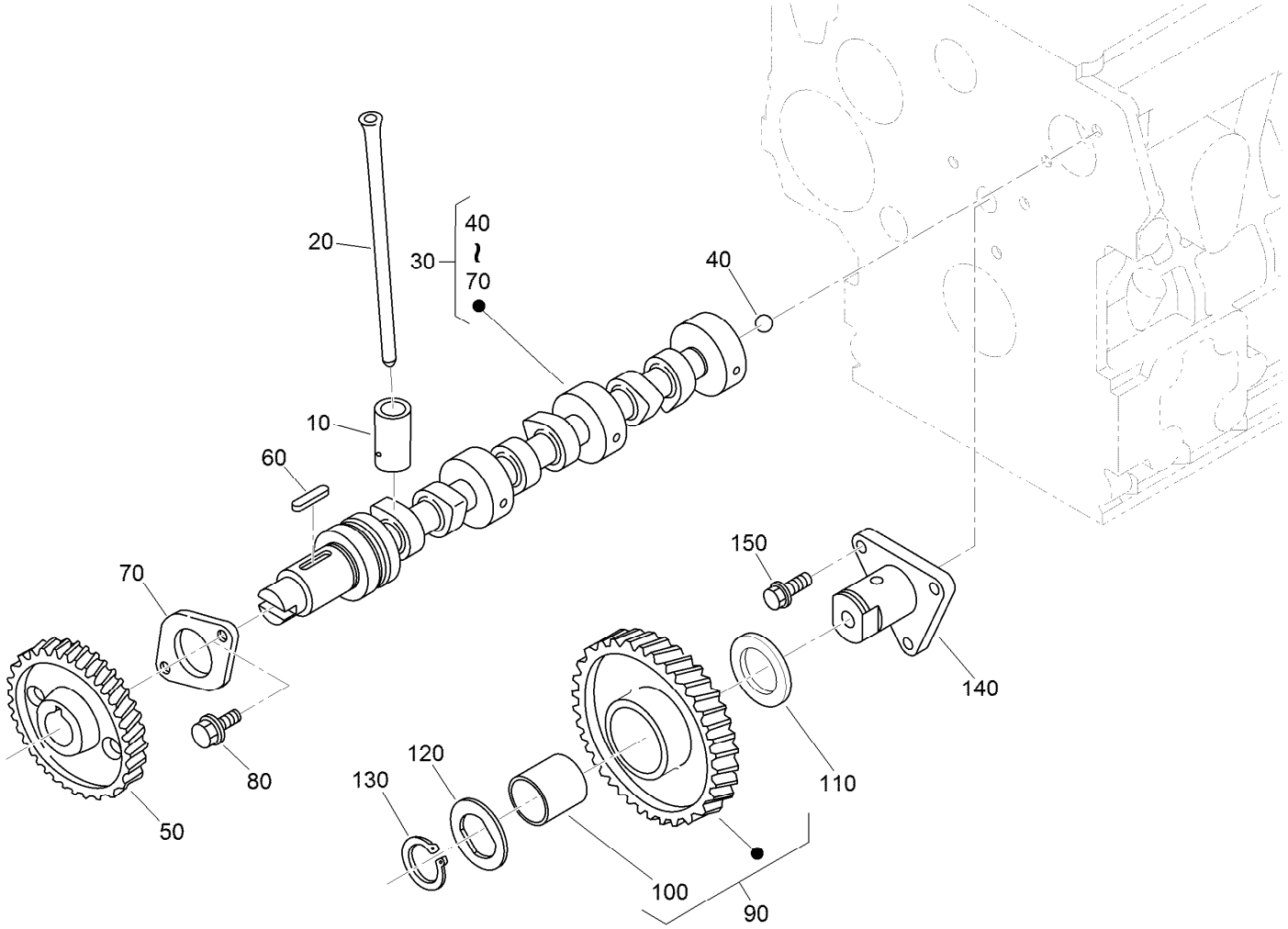

Camshaft and Idle Gear Shaft Assembly

Ref.	Part Number	Qty.	Description
10	112-0185	6	Tappet
20	127-0421	6	Rod-Push
30	130-1505	1	Camshaft ASM
40	110-3729	1	Ball
50	98-9512	1	Gear-Cam
60	98-9378	1	Key-Feather
70	98-9510	1	Stopper-Camshaft
80	98-7692	2	Bolt
90	117-7584	1	Idler Gear ASM
100	117-7585	1	Bushing-Gear, Idle
110	98-9535	1	Collar-Gear, Idle
120	98-9536	1	Collar-Gear, Idle
130	98-9534	1	Circlip-Gear, Idle
140	98-9533	1	Shaft-Gear, Idle
150	98-7692	3	Bolt

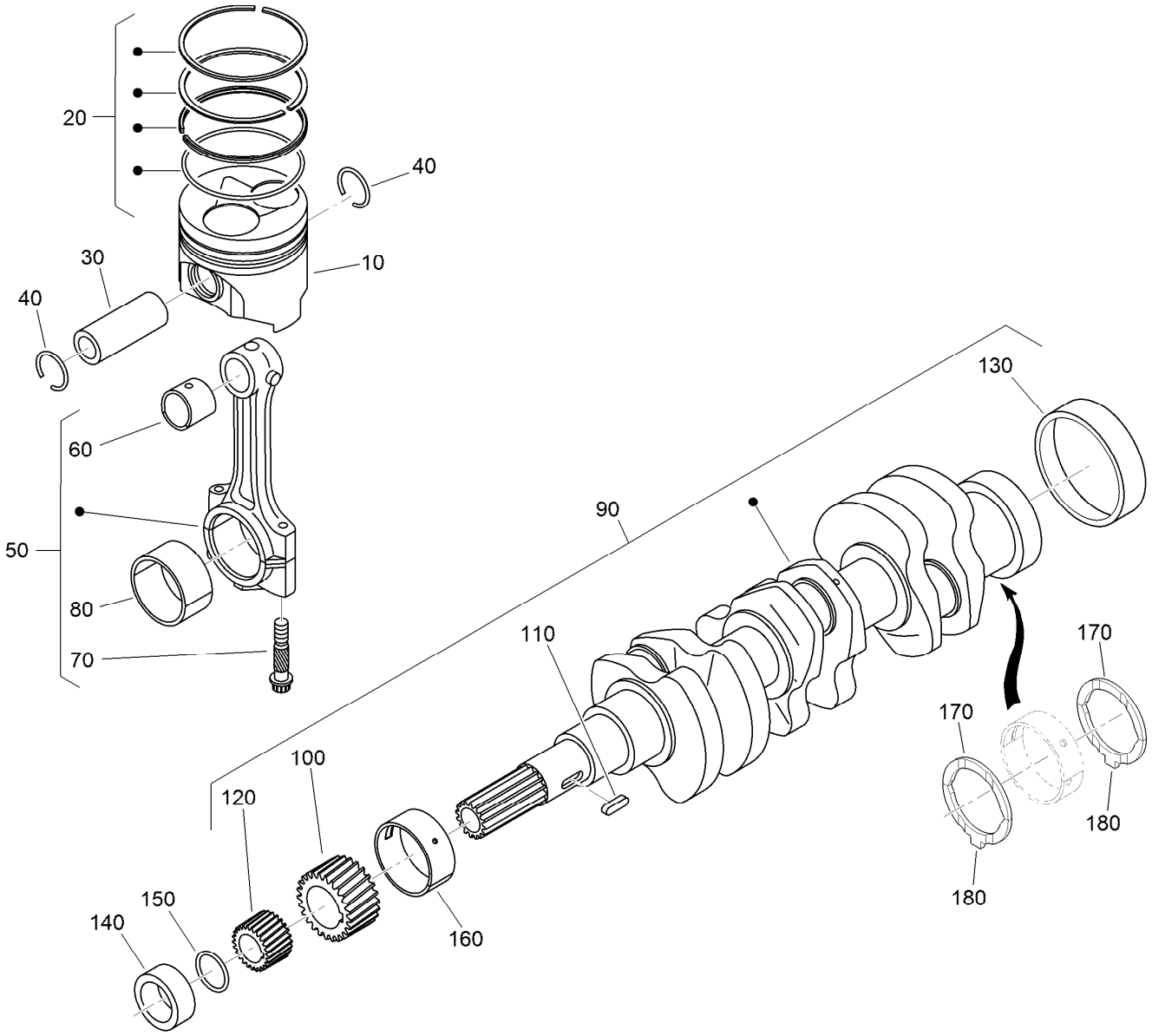

Piston and Crankshaft Assembly

Ref.	Part Number	Qty.	Description
10	130-1546	3	Piston (STD)
10	130-1549	3	Piston (+0.50Mm)
20	130-1506	3	Piston Ring ASM (STD)
20	130-1507	3	Piston Ring ASM (+0.50Mm)
30	98-9513	3	Pin-Piston
40	98-9514	6	Circlip-Pin, Piston
50	117-7586	3	Connecting Rod ASM
60	115-3014	3	Bushing-Pin, Piston
70	98-9517	6	Bolt-Rod, Connecting
80	98-9553	3	Bearing-Rod (STD)
80	117-7587	3	Metal-Crankpin (-0.2Mm)
80	117-7588	3	Metal-Crankpin (-0.4Mm)
90	130-1375	1	Crankshaft ASM
100	117-7561	1	Gear-Crankshaft

Ref.	Part Number	Qty.	Description
110	98-9666	1	Key
120	127-0445	1	Gear-Drive, Oil Pump
130	98-9522	1	Sleeve-Crankshaft
140	127-0444	1	Collar-Crankshaft
150	105-3783	1	O-Ring
160	112-7005	1	Bearing-Main (STD)
160	98-9528	1	Bearing-Main (-0.2Mm)
160	130-1274	1	Metal-Crankshaft (-0.40Mm)
170	98-9413	2	Bearing-Thrust (STD)
170	127-0416	2	Metal-Side (+0.2Mm)
170	127-0417	2	Metal-Side (+0.40Mm)
180	98-9688	2	Bearing-Thrust (STD)
180	127-0437	2	Metal-Side (+0.2Mm)
180	127-0438	2	Metal-Side (+0.40Mm)

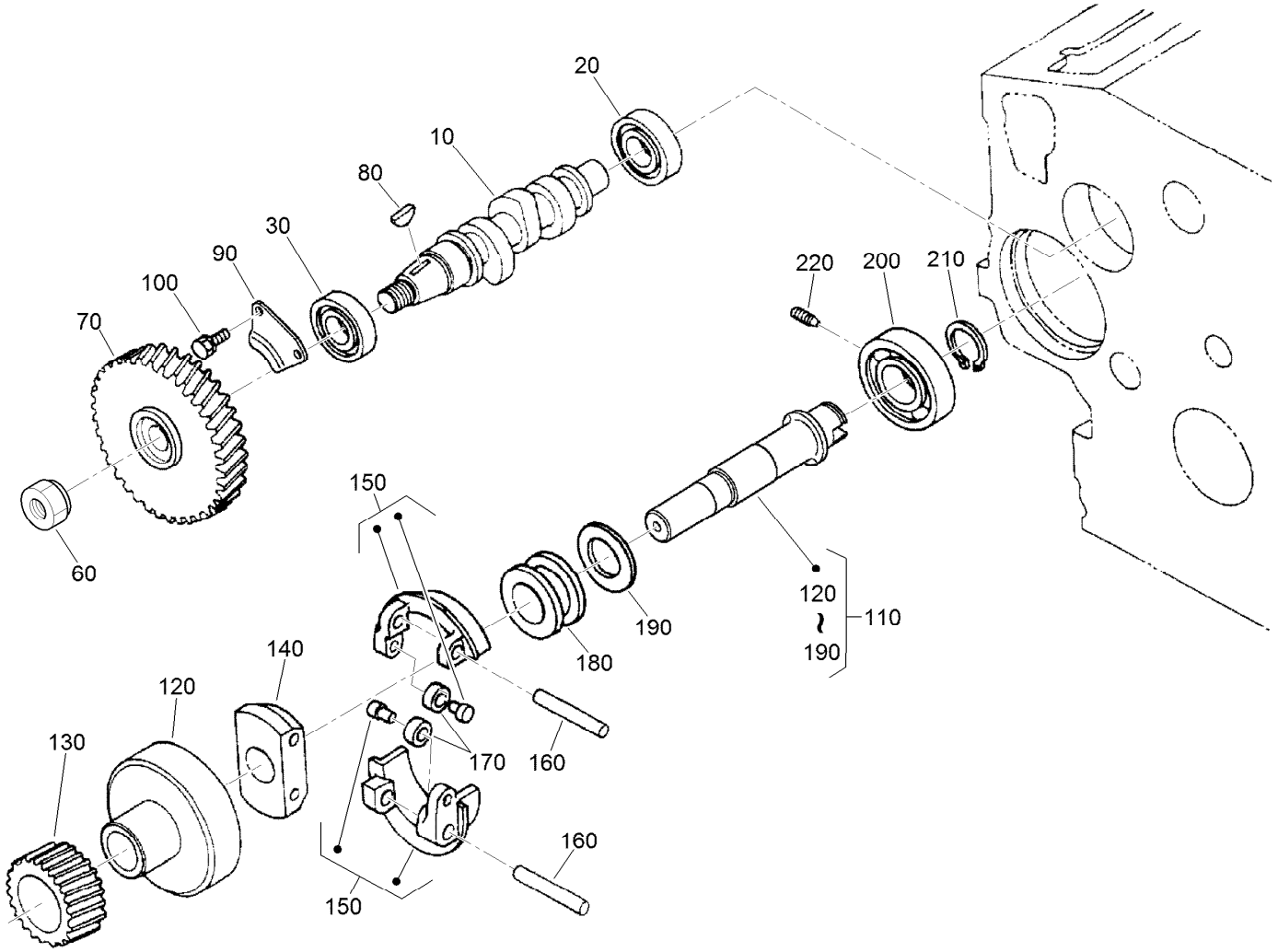

Fuel Camshaft and Governor Shaft Assembly

Ref.	Part Number	Qty.	Description
10	98-9459	1	Camshaft-Fuel
20	107-9077	1	Bearing-Ball
30	107-9078	1	Bearing-Ball
60	130-1512	1	Nut
70	130-1378	1	Gear-Injection Pump
80	98-9595	1	Key-Woodruff
90	98-9511	1	Stopper-Fuel, Camshaft
100	98-7692	2	Bolt
110	130-1255	1	Governor Shaft ASM
120	98-9562	1	Holder-Gear, Governor

Ref.	Part Number	Qty.	Description
130	98-9673	1	Gear-Governor
140	98-9561	1	Holder-Weight, Governor
150	130-1240	2	Governor Weight ASM
160	98-9560	2	Shaft-Weight, Governor
170	98-9692	2	Roller
180	98-9563	1	Sleeve-Governor
190	98-9564	1	Washer-Thrust
200	107-9079	1	Bearing-Ball
210	98-9657	1	Circlip-Shaft, Governor
220	98-9565	1	Screw-Set

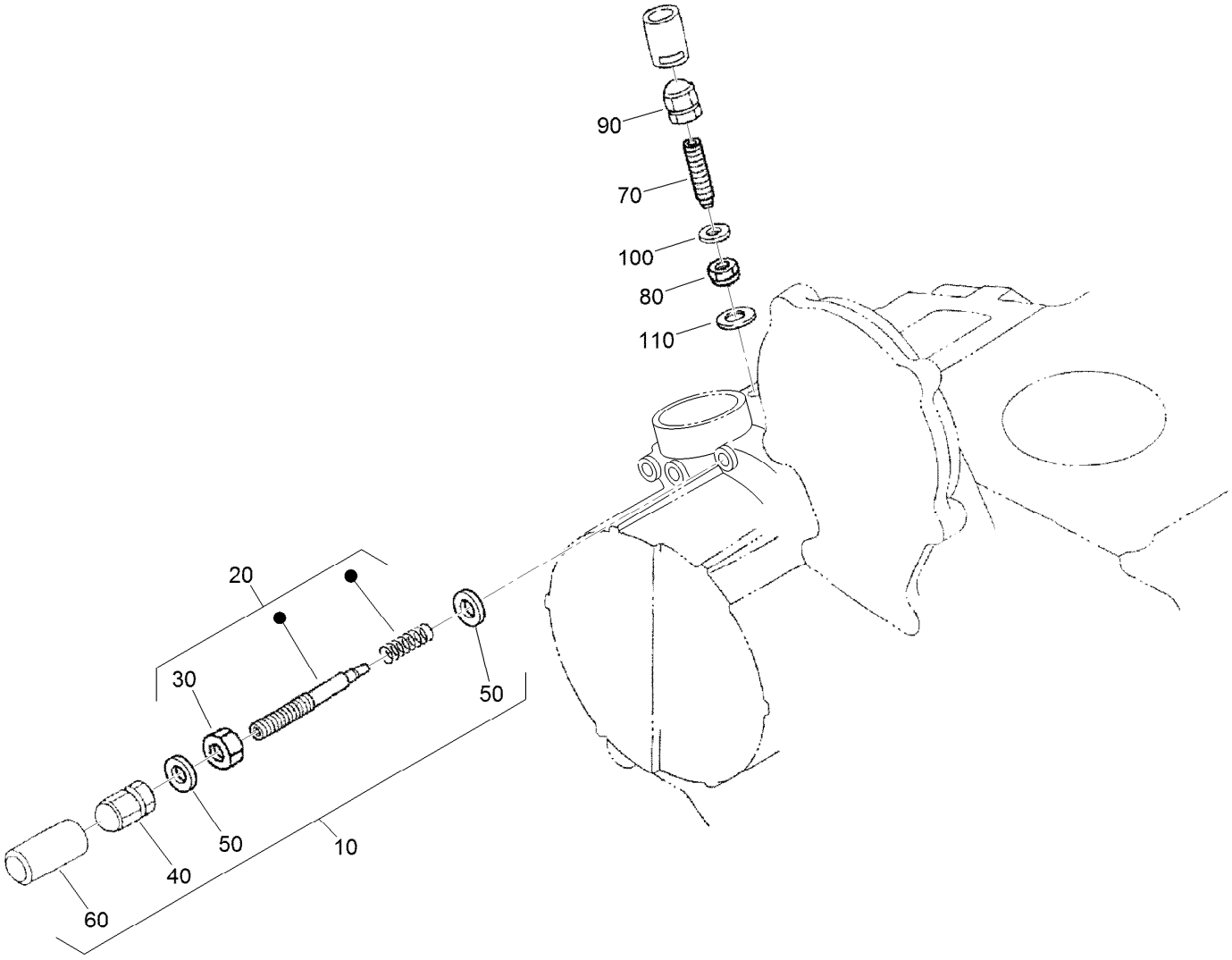

Idle Apparatus Assembly

Ref.	*Part Number*	*Qty.*	*Description*
10	107-7838	1	Apparatus-Idling
20	130-1253	1	Adjusting Bolt ASM
30	98-9439	1	Nut
40	112-0181	1	Nut
50	98-7654	2	Gasket
60	98-7656	1	Cap
70	112-7015	1	Bolt-Adjusting
80	100-2175	1	Nut-Lock
90	112-0181	1	Nut
100	98-7654	1	Gasket
110	107-9081	1	Gasket

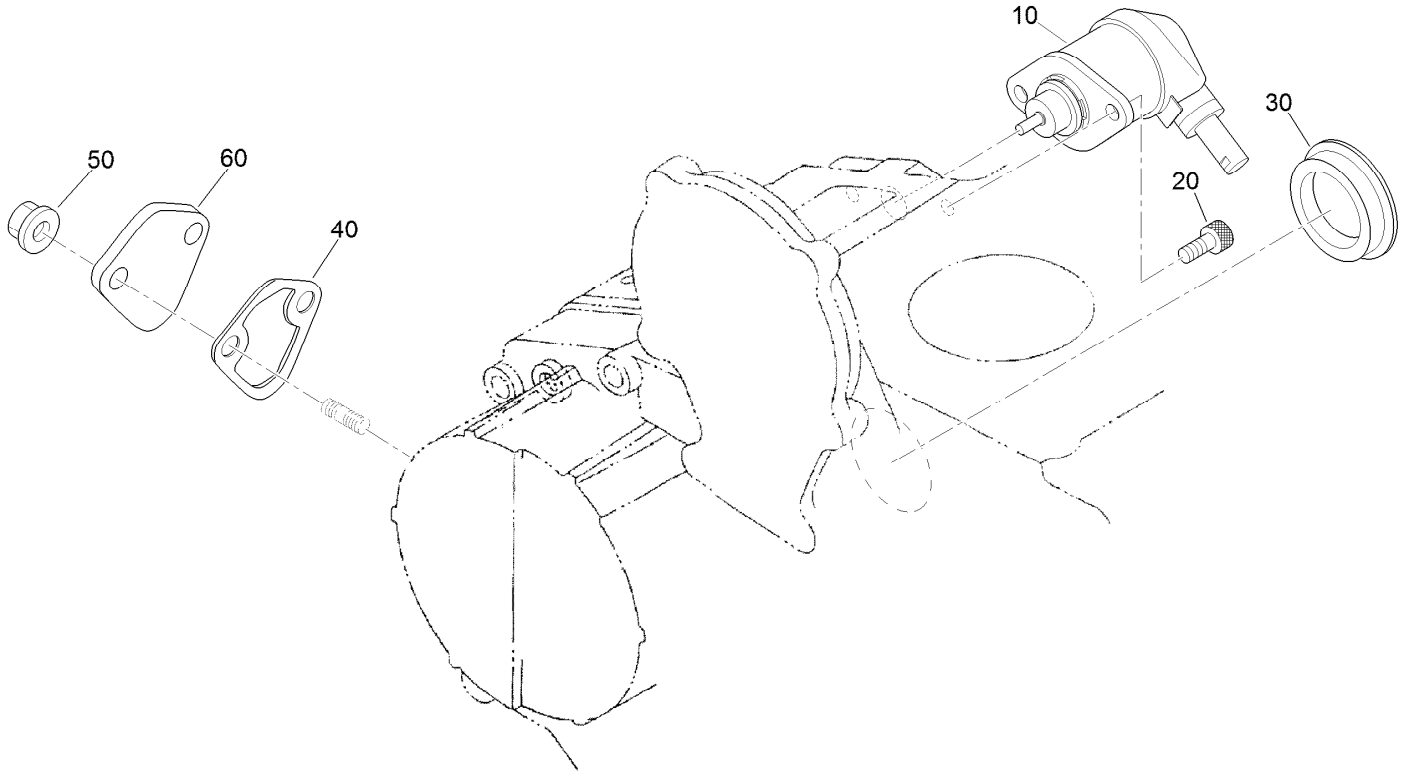

Stop Solenoid and Fuel Pump Cover Assembly

Ref.	*Part Number*	*Qty.*	*Description*
10	104-5155	1	Solenoid-Stop
20	130-1155	2	Screw-HSH
30	99-3514	1	Cover
40	117-7562	1	Gasket-Pump, Fuel
50	100-2203	2	Nut-Flange
60	112-7016	1	Cover-Pump

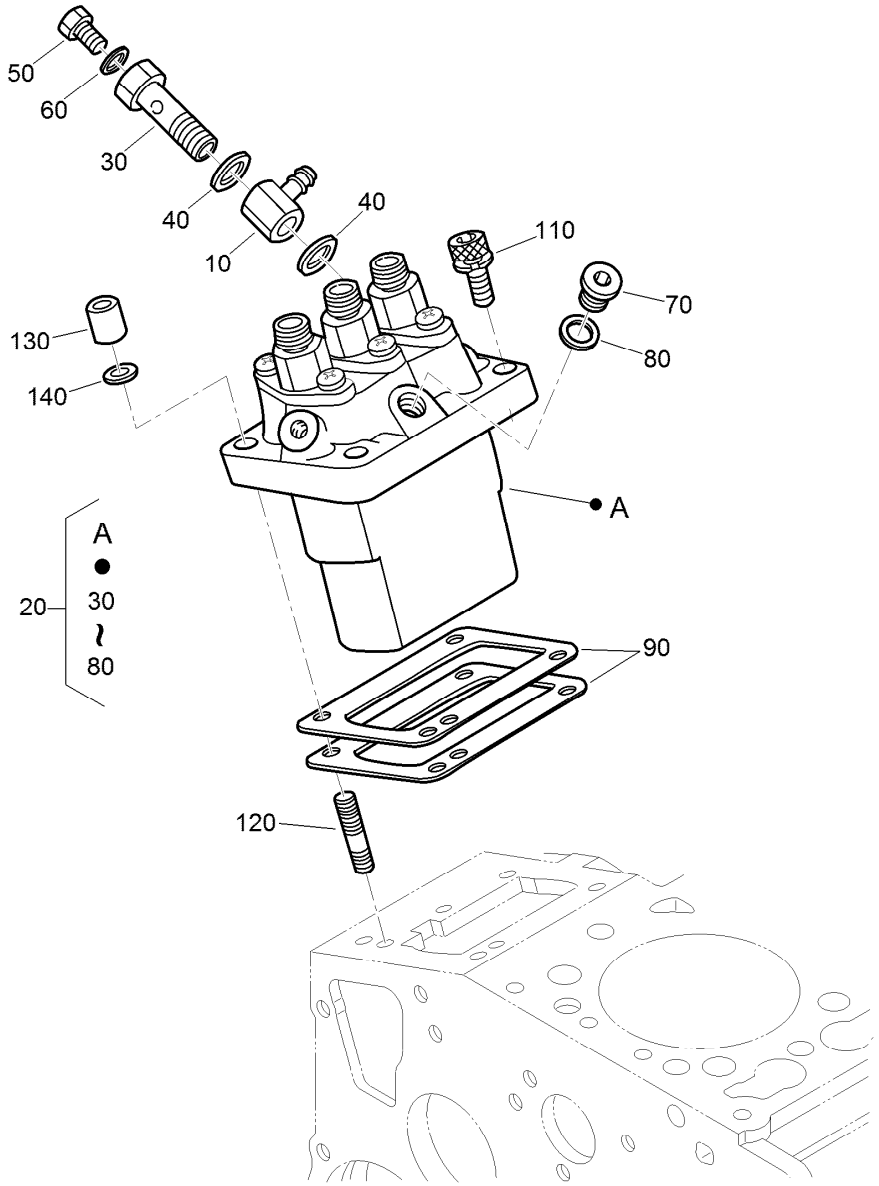

Injection Pump Assembly

Ref.	Part Number	Qty.	Description
10	98-9596	1	Joint-Eye
20	98-9643	1	Injection Pump ASM
30	98-9464	1	Bolt-Joint
40	98-9445	2	Gasket
50	98-9430	1	Screw
60	98-9446	1	Gasket
70	98-9466	1	Plug
80	98-9451	1	Gasket
90	98-9456	1	Shim-Injection (0.20Mm)

Ref.	Part Number	Qty.	Description
90	98-9457	1	Shim-Injection (0.25Mm)
90	98-9458	1	Shim-Injection (0.30Mm)
90	115-3046	1	Shim-Injection (0.35Mm)
90	115-3045	1	Shim-Injection (0.175Mm)
110	117-7564	2	Bolt-Hex Soc HD
120	98-9438	2	Stud
130	98-9440	2	Nut-Cap
140	98-7699	2	Washer-Spring

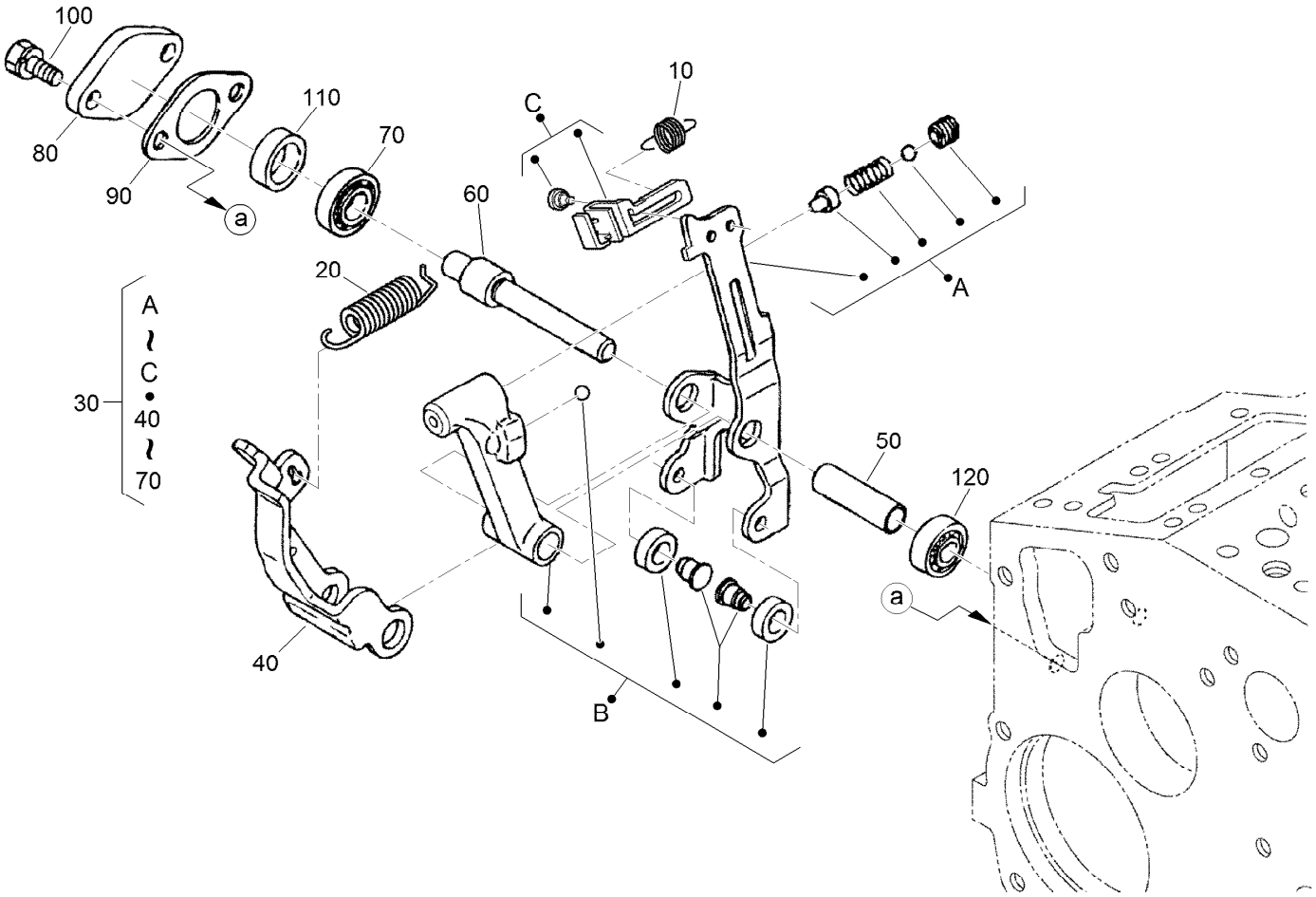

Governor Assembly

Ref.	Part Number	Qty.	Description
10	105-3786	1	Spring-Start
20	107-7839	1	Spring-Governor
30	107-7840	1	Fork Lever ASM
40	107-9084	1	Lever-Fork
50	107-9085	1	Shaft-Lever, Fork
60	107-9086	1	Shaft-Lever, Fork
70	98-9570	1	Bearing-Miniaturize
80	115-4122	1	Cover-Shaft, Fork Lever
90	98-9682	1	Gasket
100	98-9350	2	Bolt
110	98-9567	1	Collar
120	98-9571	1	Bearing-Miniaturize

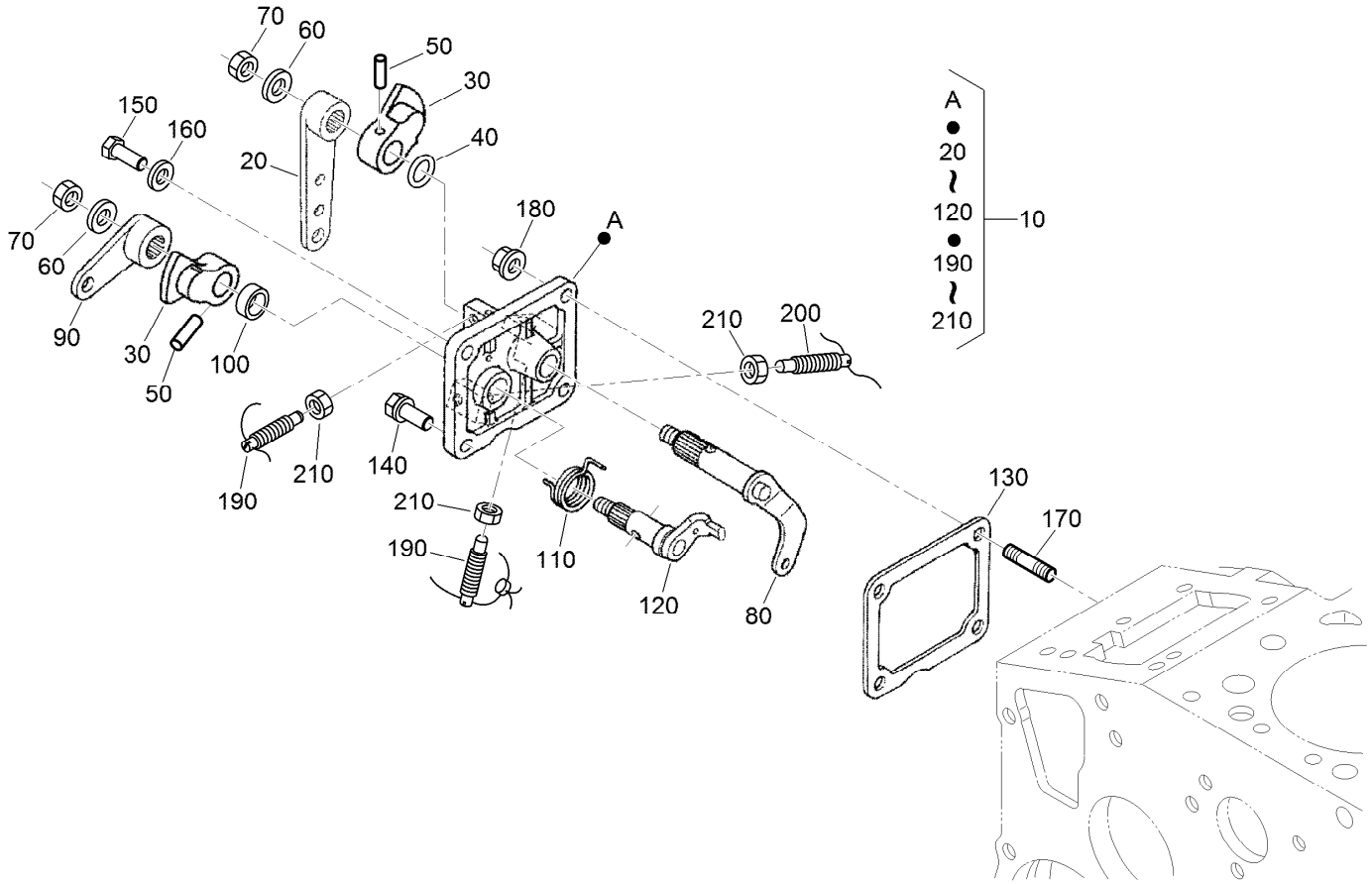

Speed Control Plate Assembly

Ref.	Part Number	Qty.	Description
10	105-3735	1	Control Plate ASM
20	98-9662	1	Lever-Control, Speed
30	98-9572	2	Lever-Control, Speed
40	105-3788	1	O-Ring
50	98-7602	2	Pin-Spring
60	98-9594	2	Washer-Plain
70	98-9589	2	Nut
80	98-9658	1	Governor Lever ASM
90	98-9663	1	Lever-Stop, Engine
100	98-7601	1	Seal-Oil
110	98-9472	1	Spring-Return

Ref.	Part Number	Qty.	Description
120	98-9664	1	Shaft-Lever, Stop
130	98-9637	1	Gasket
140	98-7692	1	Bolt
150	127-0401	1	Bolt-Hex
160	98-7654	1	Gasket
170	105-3710	2	Stud
180	100-2203	2	Nut-Flange
190	117-7565	2	Bolt-Adjusting
200	117-7566	1	Bolt-Adjusting
210	98-7572	3	Nut

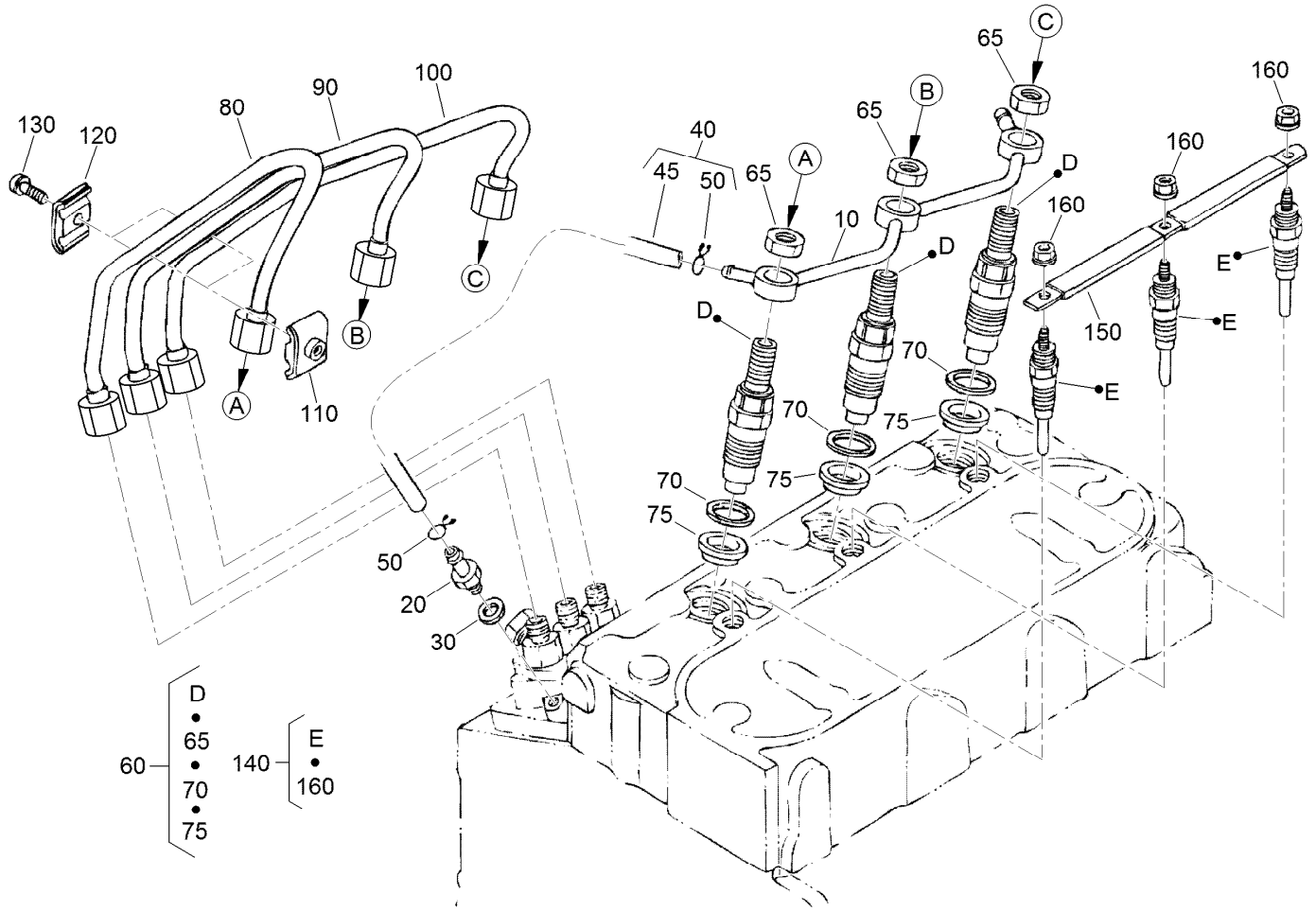

Nozzle Holder and Glow Plug Assembly

Ref.	Part Number	Qty.	Description
10	98-9620	1	Overflow Pipe ASM
20	98-9431	1	Screw-Bleeder, Air
30	98-7654	1	Gasket
40	98-9420	1	Overflow Pipe ASM
45	112-0182	1	Pipe-Overflow
50	98-7671	2	Clip-Pipe
60	130-1410	3	Nozzle Holder Kit
65	121-2411	3	Nut
70	98-7676	3	Gasket
75	98-7677	3	Seal-Heat

Ref.	Part Number	Qty.	Description
80	98-9622	1	Pipe-Injection
90	98-9654	1	Pipe-Injection
100	98-9655	1	Pipe-Injection
110	98-7682	2	Clamp-Pipe
120	98-7683	2	Clamp-Pipe
130	98-7684	2	Screw (W/Washer)
140	130-1411	3	Plug-Glow
150	98-9631	1	Cord-Plug, Glow
160	99-8377	3	Nut-Flange

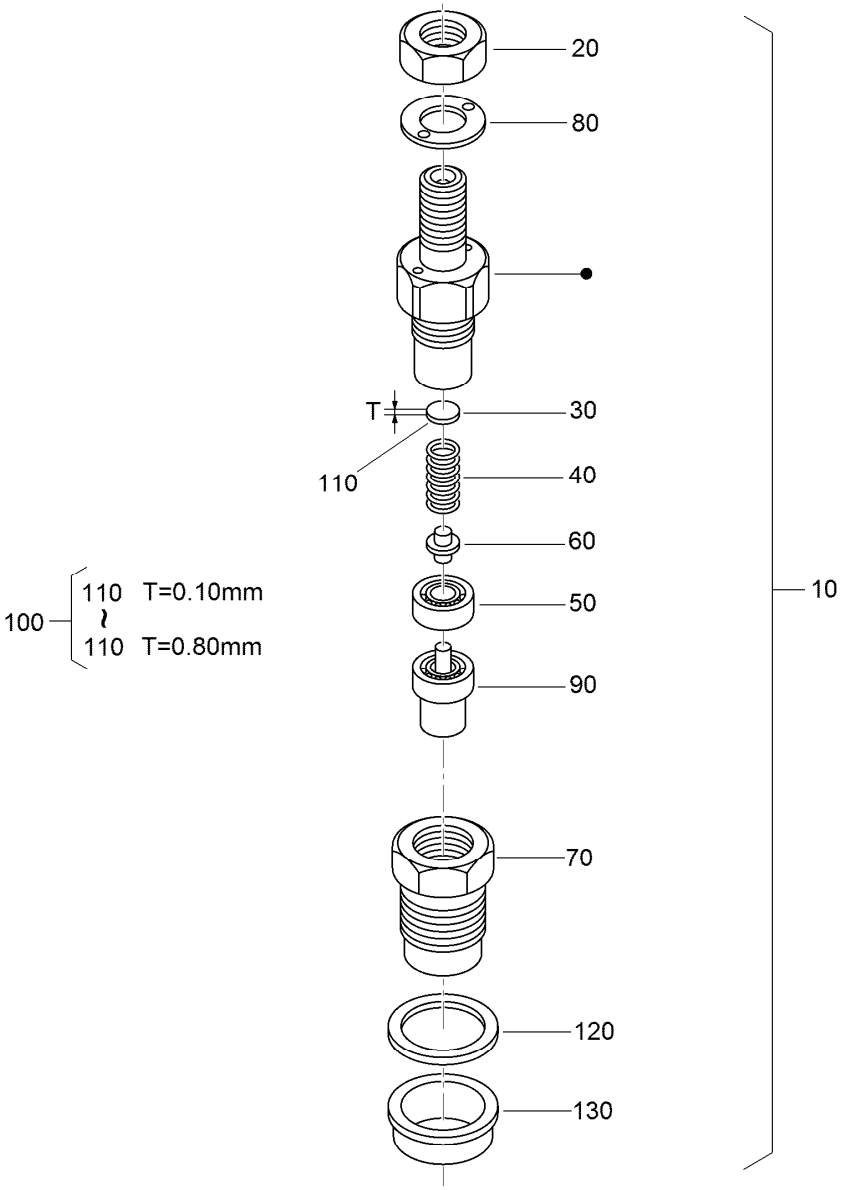

Nozzle Holder Assembly

Ref.	Part Number	Qty.	Description
10	130-1410	3	Nozzle Holder Kit
20	121-2411	3	Nut
30	99-8302	3	Washer-Adjusting
40	99-8303	3	Spring-Nozzle
50	99-8304	3	Spacer-Distance
60	99-8305	3	Rod-Push
70	99-8306	3	Nut-Nozzle
80	99-8307	3	Washer-Plain
90	115-3020	3	Piece-Nozzle
100	99-8309	3	Adjusting Washer ASM
110	99-8310	3	Washer-Adjust (0.10Mm)

Ref.	Part Number	Qty.	Description
110	99-8311	3	Washer-Adjust (0.20Mm)
110	99-8312	3	Washer-Adjust (0.30Mm)
110	99-8313	3	Washer-Adjust (0.40Mm)
110	99-8314	3	Washer-Adjust (0.50Mm)
110	99-8315	3	Washer-Adjust (0.52Mm)
110	99-8316	3	Washer-Adjust (0.54Mm)
110	99-8317	3	Washer-Adjust (0.56Mm)
110	99-8318	3	Washer-Adjust (0.58Mm)
110	99-8319	3	Washer-Adjust (0.80Mm)
120	98-7676	3	Gasket
130	98-7677	3	Seal-Heat

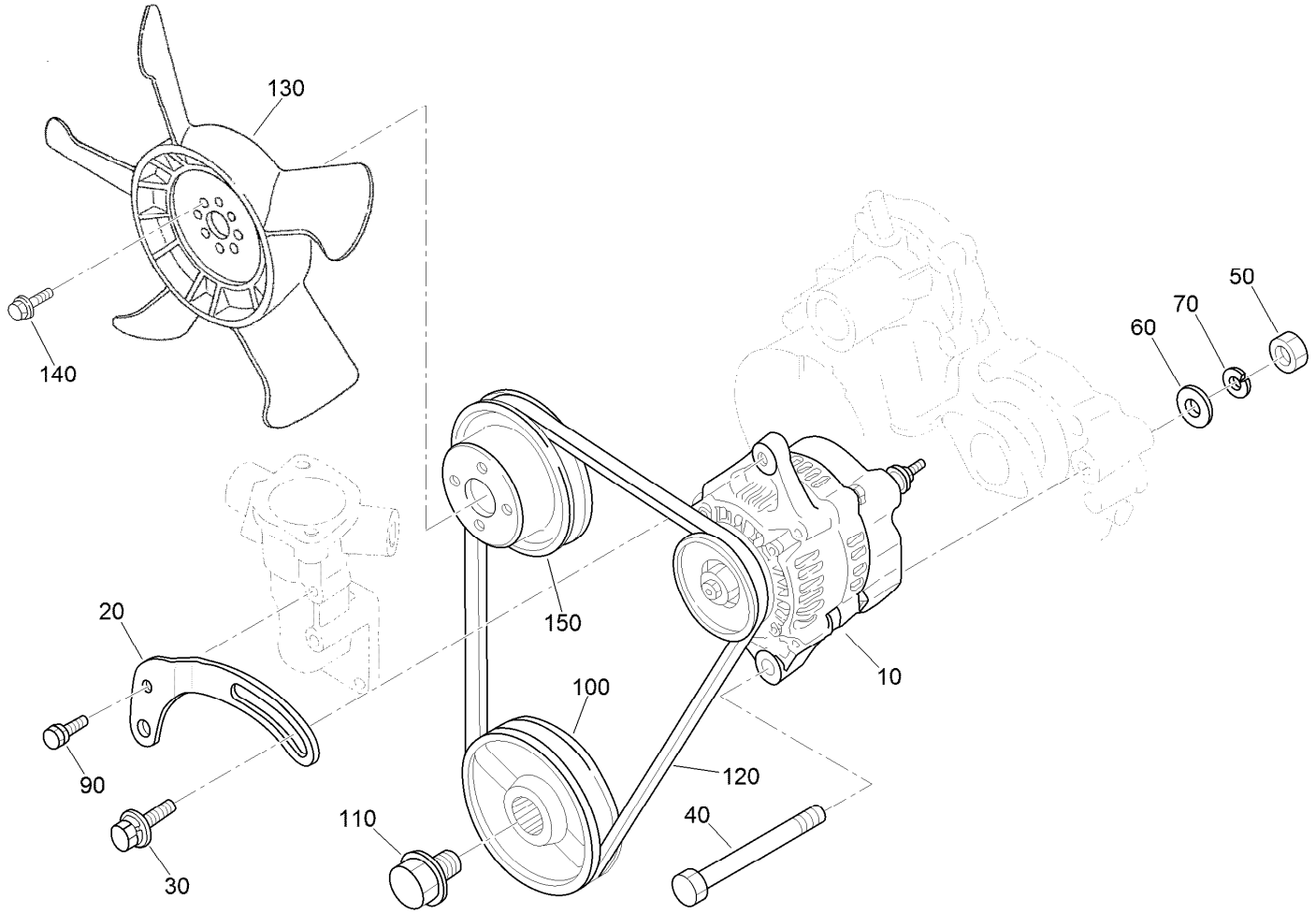

Alternator, Pulley and Fan Assembly

Ref.	Part Number	Qty.	Description
10	98-9474	1	Alternator ASM
20	112-7047	1	Stay-Dynamo
30	108-7088	1	Bolt
40	98-9360	1	Bolt
50	98-7737	1	Nut
60	98-9366	1	Washer-Plain
70	98-7738	1	Washer-Spring
90	98-7692	1	Bolt
100	99-3456	1	Pulley-Drive, Fan
110	98-9585	1	Bolt
120	130-1241	1	V Belt
130	99-3461	1	Fan
140	99-8363	4	Bolt-Flange
150	99-3453	1	Pulley-Fan

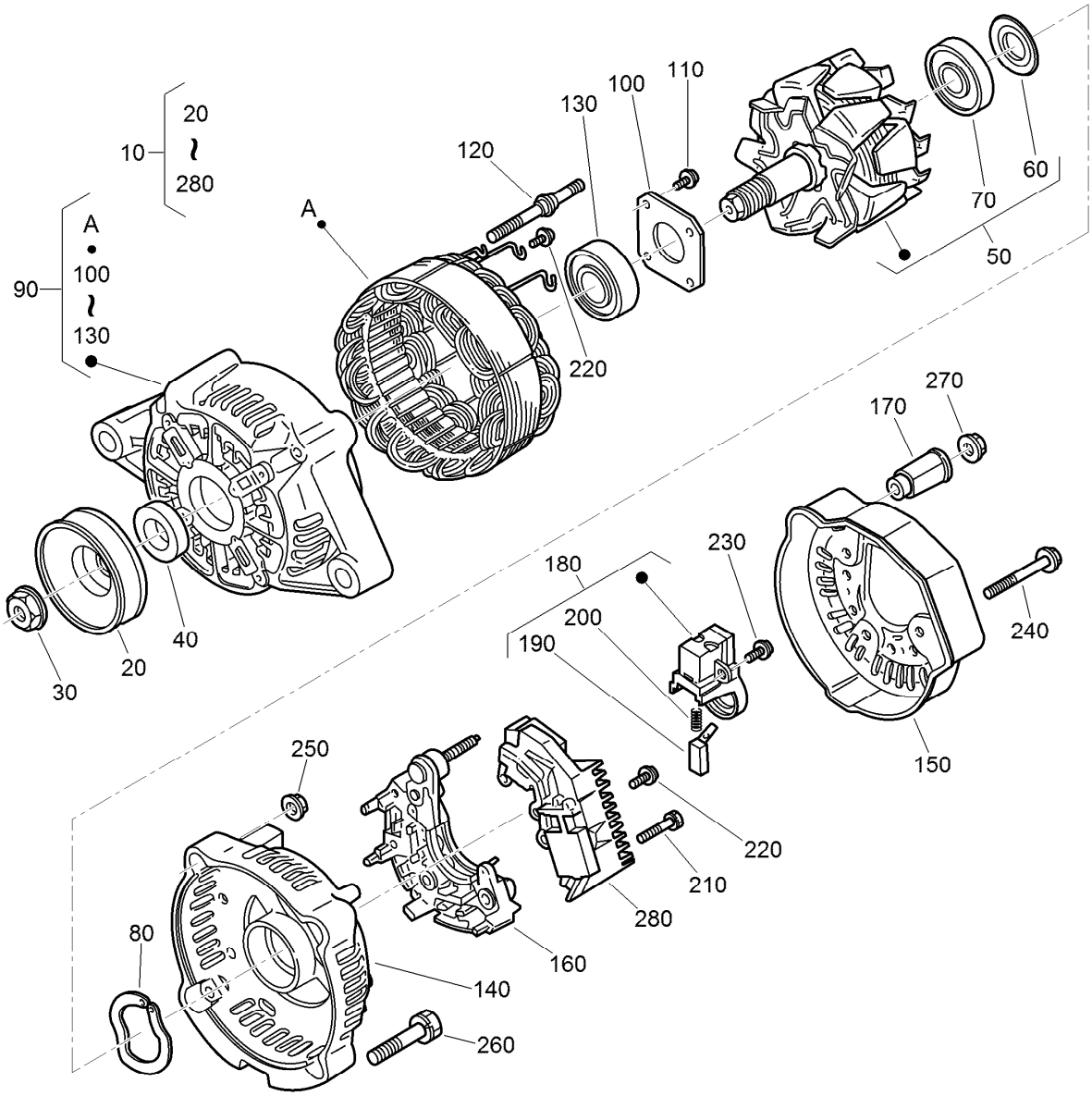

Alternator Components Assembly

Ref.	Part Number	Qty.	Description
10	98-9474	1	Alternator ASM
20	98-9453	1	Pulley-Dynamo
30	98-7708	1	Nut
40	98-7709	1	Collar
50	107-0136	1	Rotor ASM
60	98-7711	1	Cover-Bearing
70	107-0138	1	Bearing-Ball
80	98-7713	1	Washer-Thrust
90	107-0139	1	Drive End Frame ASM
100	98-7715	1	Plate-Retainer
110	98-7716	4	Screw-Head, Round
120	98-7717	2	Bolt-Through
130	107-0137	1	Bearing-Ball
140	107-9087	1	Frame-End

Ref.	Part Number	Qty.	Description
150	107-0140	1	Cover-End
160	127-1612	1	Rectifier ASM
170	98-7722	1	Bushing-Insulation
180	107-0141	1	Brush Holder ASM
190	98-7724	2	Brush
200	98-7725	2	Spring-Brush
210	98-7726	2	Screw-Head, Round
220	98-7727	6	Screw-Head, Round
230	98-7728	1	Screw-Head, Round
240	98-7729	3	Bolt
250	98-7730	2	Nut
260	98-7731	2	Bolt
270	98-7732	1	Nut
280	110-3799	1	Regulator ASM

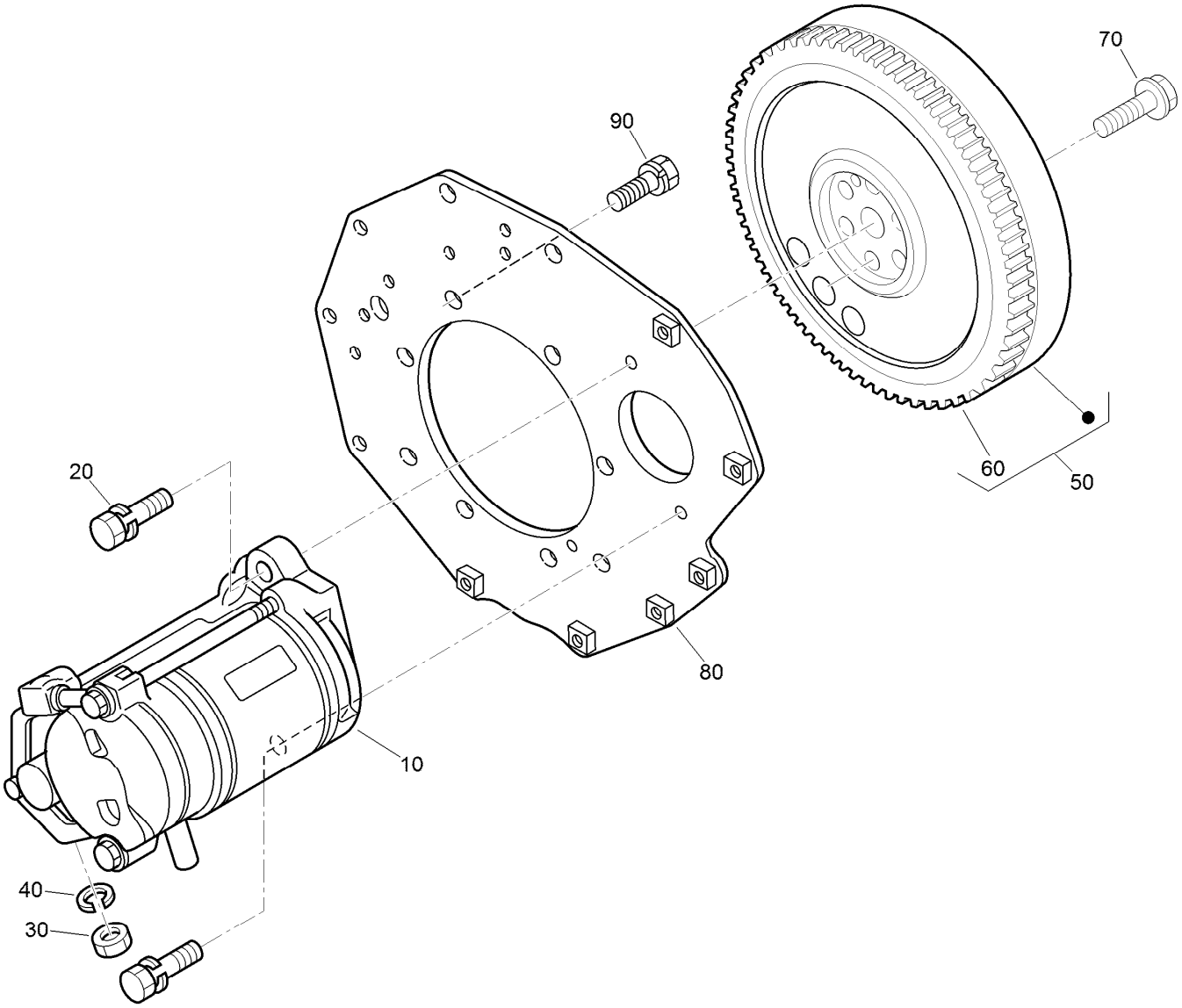

Starter and Flywheel Assembly

Ref.	*Part Number*	*Qty.*	*Description*
10	98-9705	1	Starter ASM
20	98-7697	2	Bolt
30	98-7739	1	Nut
40	105-2893	1	Washer-Spring
50	105-3784	1	Flywheel ASM
60	115-3015	1	Gear-Ring
70	98-9537	6	Bolt-Flywheel
80	98-9486	1	Plate-End, Rear
90	98-9392	8	Bolt

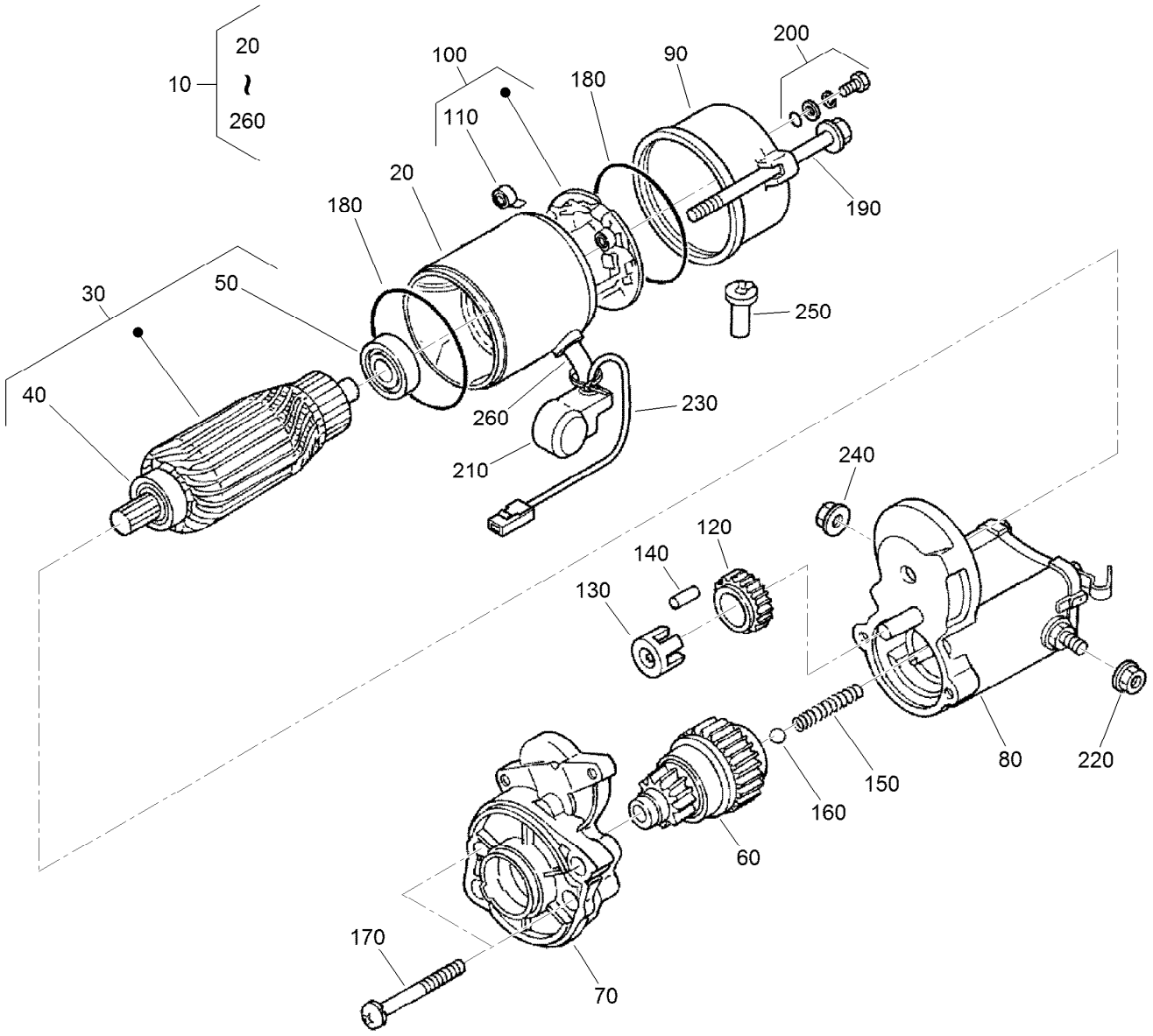

Starter Component Assembly

Ref.	Part Number	Qty.	Description
10	98-9705	1	Starter ASM
20	104-8608	1	Yoke ASM
30	98-7742	1	Armature ASM
40	98-7744	1	Bearing
50	98-7743	1	Bearing
60	99-8373	1	Clutch-Running, Over
70	99-8374	1	Frame-End, Drive
80	105-3746	1	Magnetic Switch ASM
90	98-7748	1	Frame-End
100	98-7749	1	Brush Holder ASM
110	98-7750	4	Spring-Brush
120	98-7751	1	Gear
130	98-7752	1	Retainer

Ref.	Part Number	Qty.	Description
140	98-7753	5	Roller
150	98-7754	1	Spring
160	98-7755	1	Ball
170	98-7756	2	Bolt
180	98-7757	2	O-Ring
190	100-9240	2	Bolt
200	98-7758	2	Bolt ASM
210	99-8375	1	Cover
220	99-8371	1	Nut-Hex
230	98-9711	1	Cord-Solenoid, Stop
240	99-8376	1	Nut-Hex
250	98-7759	1	Pipe-Drain
260	98-9712	1	Band-Cover

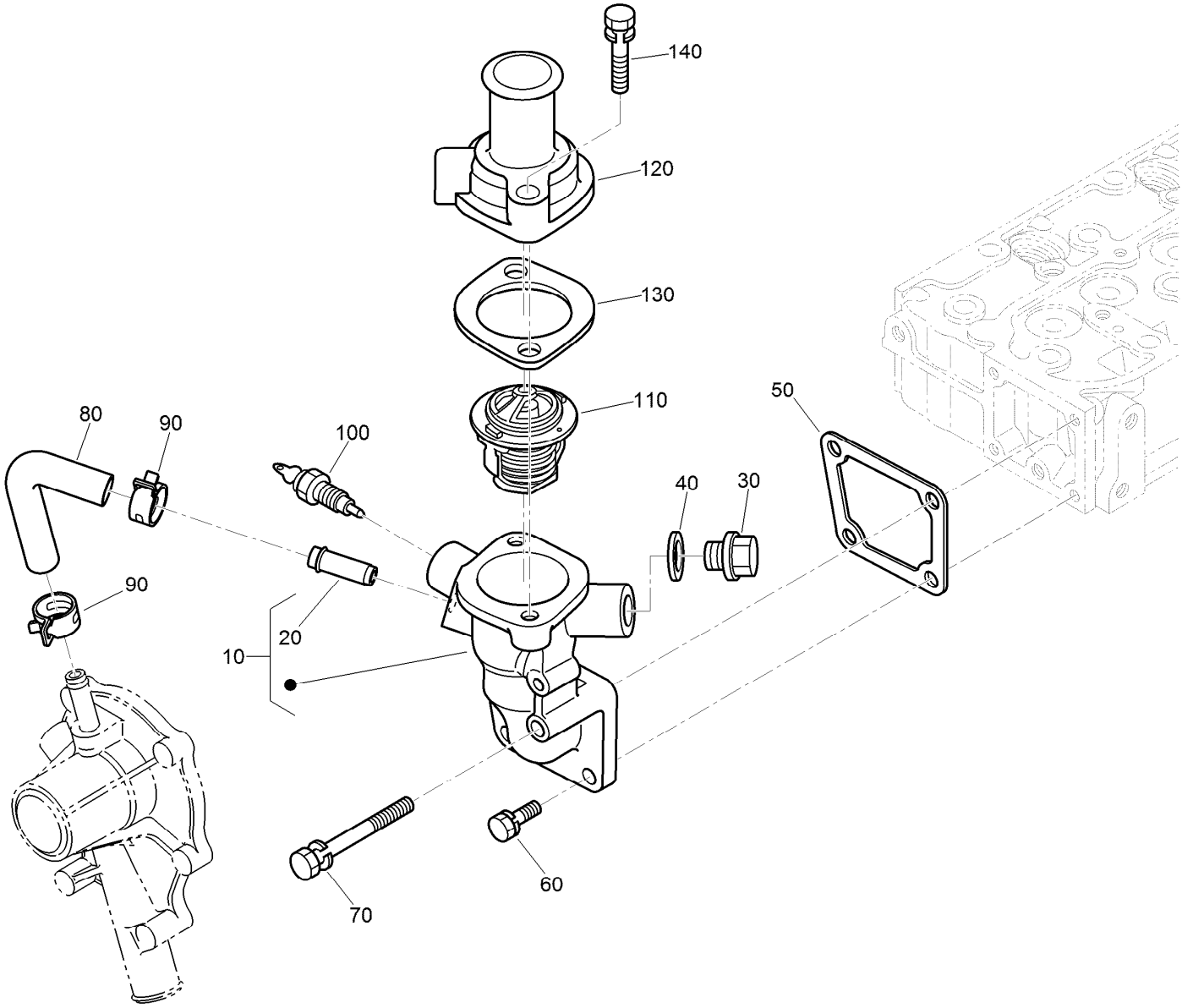

Water Flange and Thermostat Assembly

Ref.	Part Number	Qty.	Description
10	98-9713	1	Water Flange ASM
20	98-9580	1	Pipe-Return, Water
30	105-3747	1	Plug
40	99-3583	1	Gasket
50	98-9638	1	Gasket-Flange, Water
60	98-7692	3	Bolt
70	98-9356	1	Bolt
80	98-9578	1	Pipe-Return, Water
90	125-9078	2	Clamp-Hose
100	98-9719	1	Thermoswitch
110	98-7778	1	Thermostat ASM
120	98-9471	1	Cover-Thermostat
130	105-3748	1	Gasket-Thermostat
140	98-7777	2	Bolt

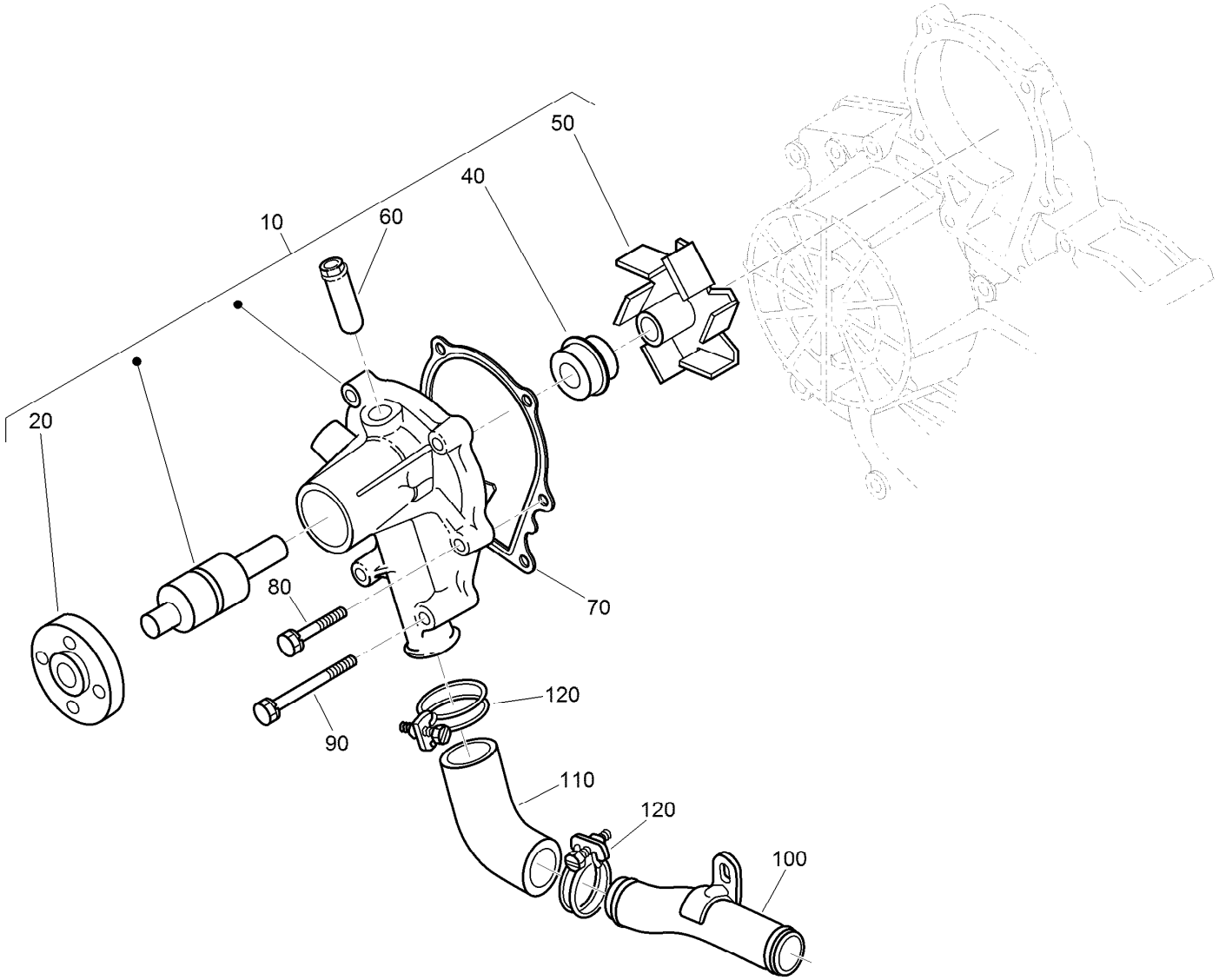

Water Pump and Water Pipe Assembly

Ref.	Part Number	Qty.	Description
10	107-9089	1	Water Pump ASM
20	99-3516	1	Flange-Pump, Water
40	105-3750	1	Mechanical Seal ASM
50	112-7017	1	Impeller-Pump, Water
60	100-1932	1	Pipe-Return, Water
70	99-3454	1	Gasket-Pump, Water
80	98-9353	4	Bolt
90	98-9357	2	Bolt
100	98-9716	1	Pipe-Water
110	107-9091	1	Pipe-Water
120	127-0439	2	Clamp-Hose

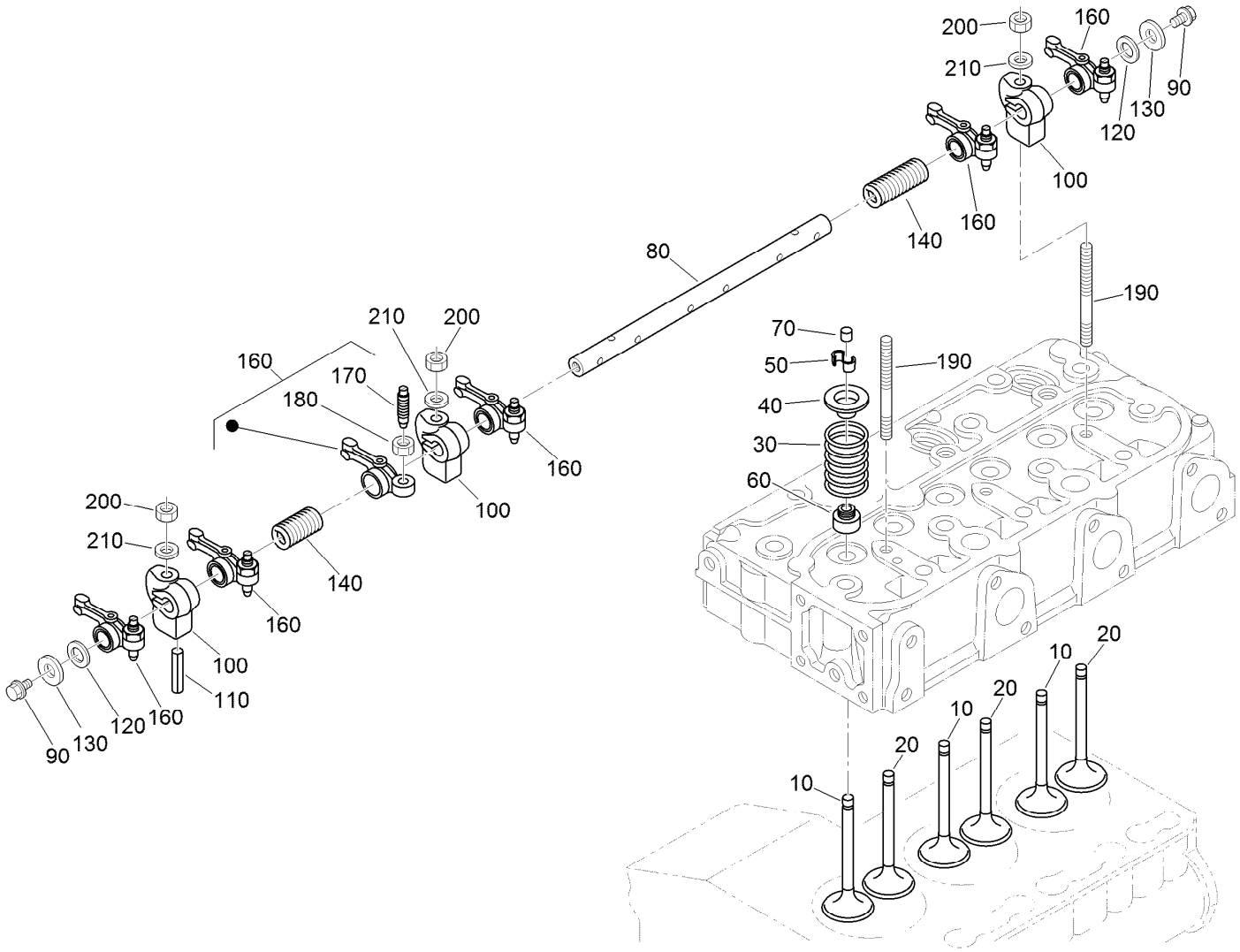

Valve and Rocker Arm Assembly

Ref.	Part Number	Qty.	Description
10	112-7018	3	Valve-Inlet
20	120-2564	3	Valve-Exhaust
30	98-9648	6	Spring-Valve
40	107-9092	6	Retainer-Spring
50	117-7572	6	Collet-Spring, Valve
60	99-8385	6	Seal-Stem, Valve
70	98-9497	6	Cap-Valve
80	130-1248	1	Shaft-Arm, Rocker
90	99-8363	2	Bolt-Flange
100	98-9505	3	Bracket-Arm, Rocker

Ref.	Part Number	Qty.	Description
110	105-3758	1	Pin-Spring
120	98-9507	2	Washer-Shaft, Rocker Arm
130	110-3832	2	Washer-Plain
140	98-9504	2	Spring-Arm, Rocker
160	112-7020	6	Rocker Arm ASM
170	98-9502	6	Screw-Adjusting
180	98-9503	6	Nut
190	98-9506	3	Stud
200	98-9393	3	Nut
210	98-9385	3	Washer-Flat

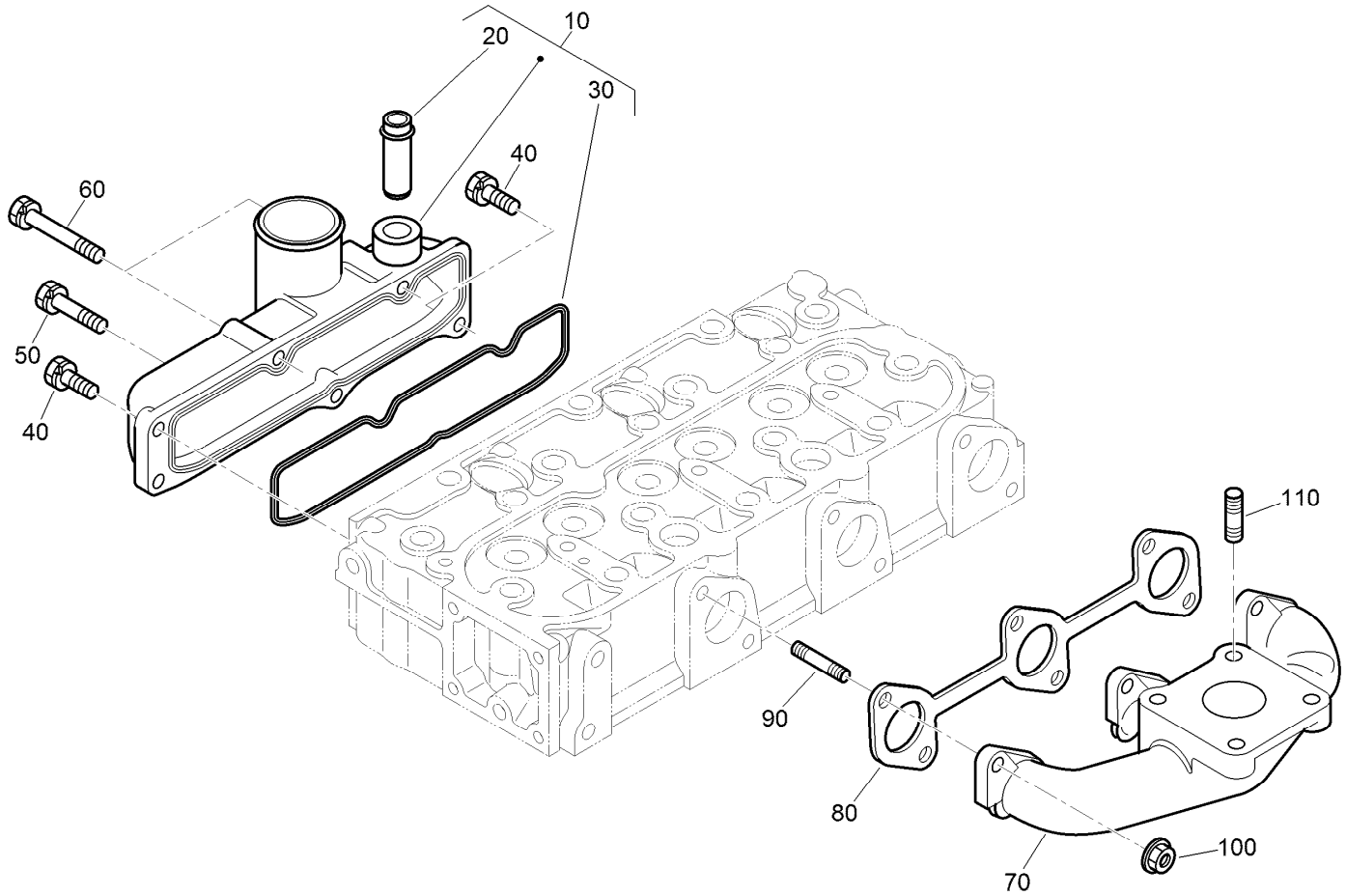

Inlet and Exhaust Manifold Assembly

Ref.	*Part Number*	*Qty.*	*Description*
10	107-7843	1	Manifold Inlet ASM
20	98-9492	1	Joint-Pipe, Breather
30	98-9609	1	Gasket-Manifold, Inlet
40	127-0403	3	Bolt-Flange
50	98-9353	1	Bolt
60	125-9063	2	Bolt-Sems
70	107-9093	1	Manifold-Exhaust
80	99-8327	1	Gasket-Manifold, Exhaust
90	98-9588	6	Stud
100	98-9665	6	Nut
110	98-7769	4	Stud

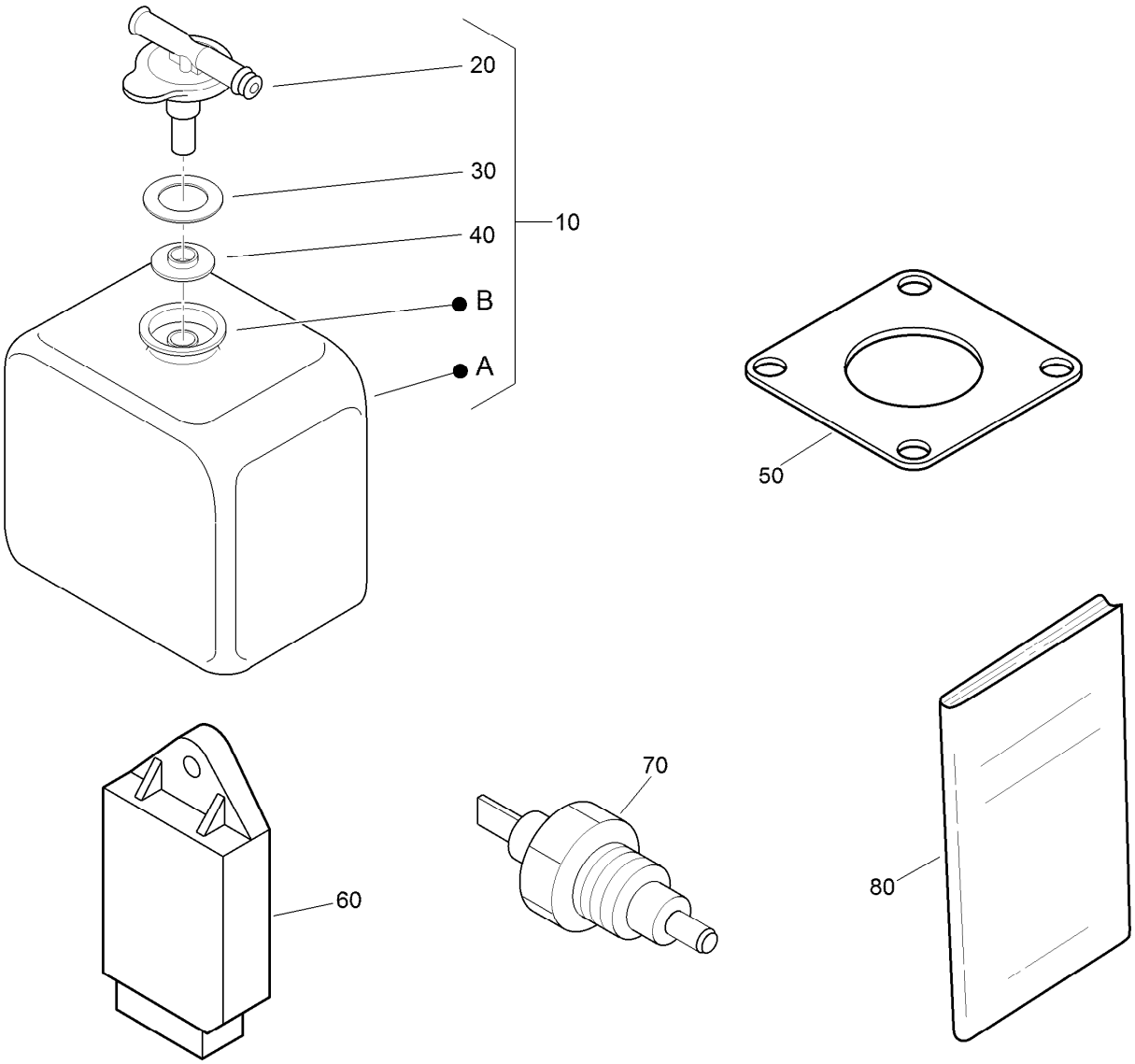

Miscellaneous Engine Parts

Ref.	*Part Number*	*Qty.*	*Description*
10	104-9318	1	Bottle-Overflow
20	115-4132	1	Cap
30	105-3755	1	Gasket
40	105-3756	1	Plate
50	99-8343	1	Gasket-Muffler
60	98-7611	1	Controller-Glow
70	106-7772	1	Thermoswitch
80	130-1543	1	Manual-Operator

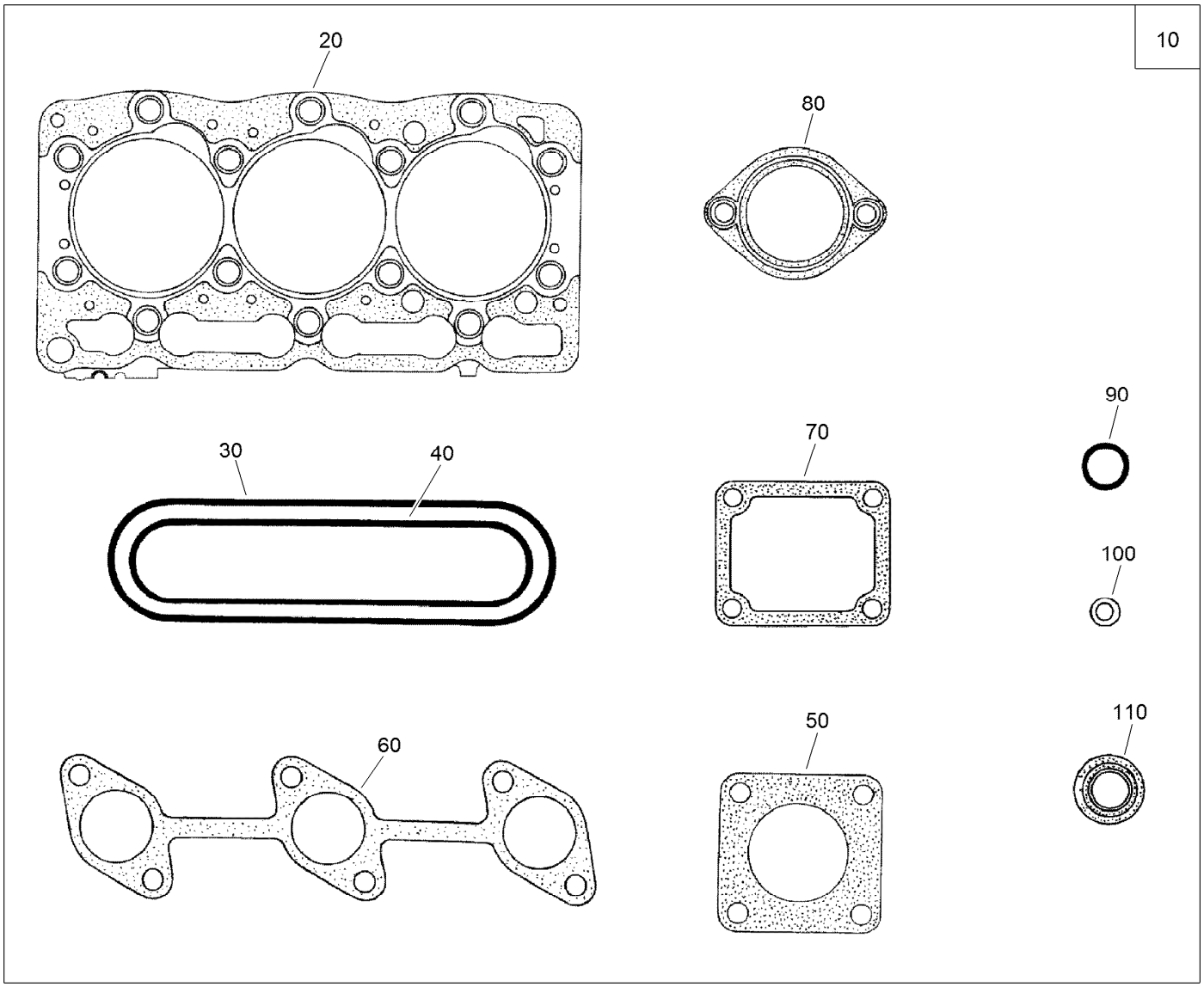

Upper Engine Gasket Kit

Ref.	*Part Number*	*Qty.*	*Description*
10	130-1363	1	Upper Gasket Kit
20	108-6573	1	Gasket-Head, Cylinder
30	130-1249	1	Gasket-Head Cover
40	98-9609	1	Gasket-Manifold, Inlet
50	99-8343	1	Gasket-Muffler
60	99-8327	1	Gasket-Manifold, Exhaust
70	98-9638	1	Gasket-Flange, Water
80	105-3748	1	Gasket-Thermostat
90	99-3446	2	O-Ring
100	98-9454	3	Gasket
110	99-8385	6	Seal-Stem, Valve

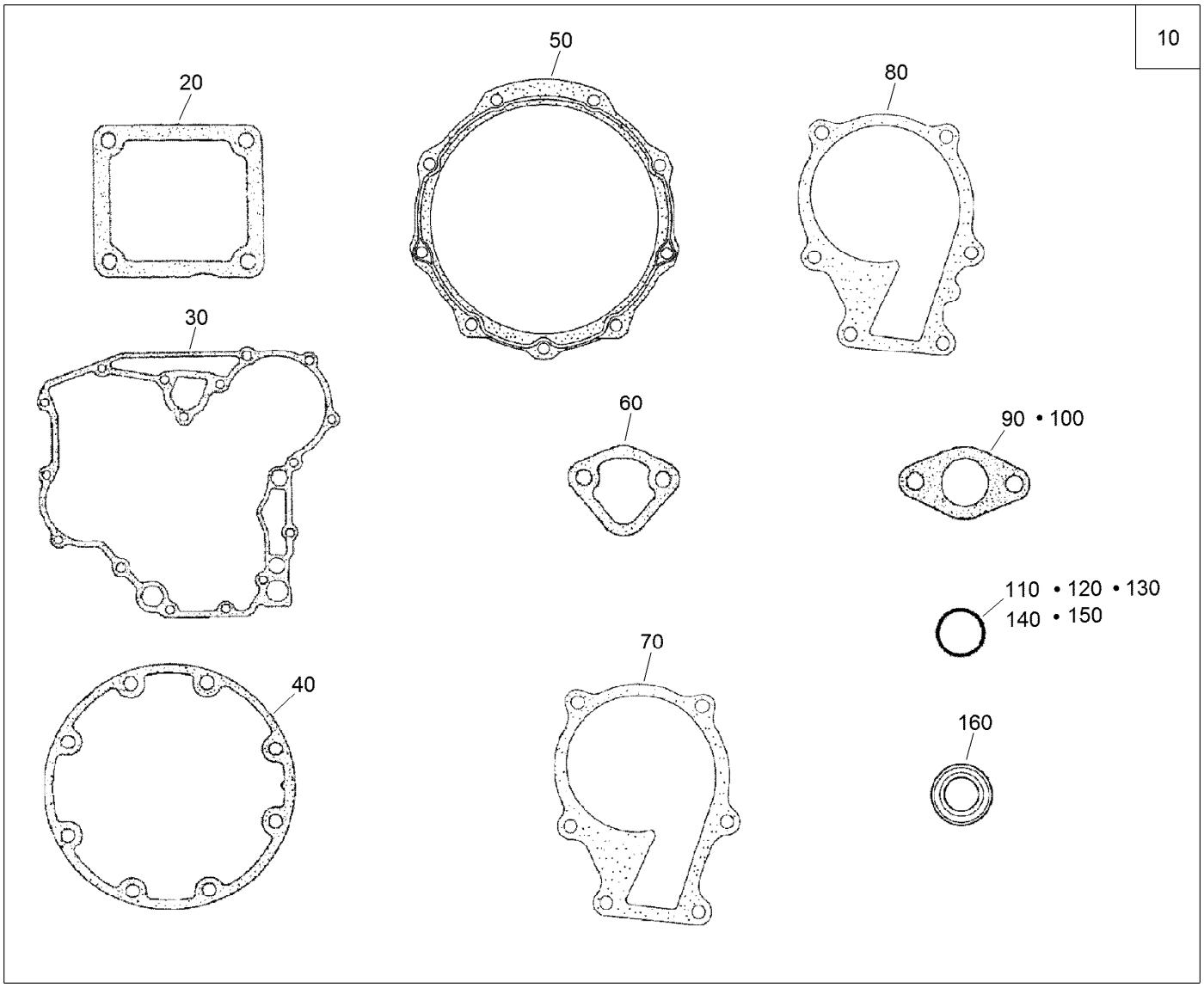

Lower Engine Gasket Kit

Ref.	Part Number	Qty.	Description
10	130-1364	1	Lower Gasket Kit
20	98-9637	1	Gasket
30	98-9633	1	Gasket-Case, Gear
40	127-0440	1	Gasket-Case, Bearing
50	112-7037	1	Gasket-Cover, Case
60	117-7562	1	Gasket-Pump, Fuel
70	98-9632	1	Gasket-Pump, Water
80	99-3454	1	Gasket-Pump, Water

Ref.	Part Number	Qty.	Description
90	98-9682	1	Gasket
100	98-9683	1	Gasket-Cover, Solenoid
110	105-3781	2	O-Ring
120	105-3777	2	O-Ring
130	105-3783	1	O-Ring
140	105-3776	1	O-Ring
150	105-3788	1	O-Ring
160	98-7601	1	Seal-Oil

Attachments and Accessories

For 03171 Reelmaster 3100-D Traction Unit With Sidewinder

Product Name	Model/Part
27in Lift Arm Kit	03172
32in Lift Arm Kit	03173
5-Blade 27in DPA Cutting Unit	03180
8-Blade 27in DPA Cutting Unit	03181
8-blade 32in DPA Cutting Unit	03182
11-blade 27in DPA Cutting Unit	03183
27in Verticutter	03184
Gauge Bar Assembly	108-6715
Premium Seat Kit	30629
Arm Rest Kit	30707
Work Light Kit	30841

Notes:

Notes:

TORO®

Count on it.